FREEDOM HIGH SCHOOL

PERFORMING ARTS AND CTE FACILITIES

1050 NEROLY RD, OAKLEY, CA 94561

LIBERTY UNION HIGH SCHOOL DISTRICT



DSA FILE NO 7-H4 **DSA APPLICATION NO: 01-117924** **PTN: 61721-0068**

CONSTRUCTION DOCUMENTS

VOLUME 1 OF 2

PROJECT TEAM

OWNER

Liberty Union School District
20 Oak Street
Brentwood, CA 94513
Phone: 925-634-2166 ext. 2036
Fax: 925-634-1687
Email: evolta@libertyuhsd.k12.ca.us

ARCHITECT

Quattrocchi Kwok Architects
636 Fifth Street
Santa Rosa, CA 95404
Phone: 707-576-0829
Fax: 707-576-0295
Email: jimt@qka.com

CONSTRUCTION MANAGER

Lathrop Construction Associates, Inc.
4001 Park Road
Benicia, CA 94510
Phone: 707-746-8000
Direct: 707-746-4450
Email: anthony.damante@lathropconstruction.com

CIVIL ENGINEER

Carlson Barbee & Gibson, Inc.
2633 Camino Ramon, Suite 350
San Ramon, CA 94583
Phone: 925-866-0322
Email: jvogan@cbandg.com

LANDSCAPE ARCHITECT

GSM Landscape Architects, Inc.
1700 Soscol Ave., Suite 23
Napa, CA 94559
Phone: 707-255-4630
Email: gretchen@gsmlainc.com

STRUCTURAL ENGINEER

ZFA Structural Engineers
1212 Fourth Street, Suite Z
Santa Rosa, CA 95404
Phone: 707-526-0992
Fax: 707-526-0217
Email: andrewz@zfa.com

CATHODIC PROTECTION

Cathodic Protection Consultant
V&A Consulting Engineers
1000 Broadway, Suite 320
Oakland, CA 94607
Phone: (510) 903-6600
Email: cteall@vaengineering.com

MECHANICAL ENGINEER

Costa Engineers
3274 Villa Lane
Napa, CA 94558
Phone: 707-252-9177
Fax: 707-252-6473
Email: cdelcore@costaengineers.com

ELECTRICAL ENGINEER

O'Mahony & Myer (OM&M)
4340 Redwood Highway, Suite 245
San Rafael, CA 94903
Phone: 415-492-0420
Fax: 415-479-6962
Email: pcolenbrander@ommconsulting.com

FIRE PROTECTION

Axiom Engineers
22 Lower Ragsdale Dr., Suite A
Monterery, CA 93940
Phone: 831-649-8000
Email: stever@axiomengineers.com

THEATER CONSULTANT

The Shalleck Collaborative Inc.
1553 Martin Luther King Jr. Way
Berkeley, CA 94709
Phone: 415-956-4100
Email: jedd@shalleck.com

ACOUSTIC ENGINEER

Dohn & Associates, Inc.
630 Quintana Road, #312
Morro Bay, CA 93442
Phone: 805-801-3434
Email: bill.dohn@dohnassoc.com

ENERGY

Guttmann & Blaevoet Consulting Engineers
15 3rd Street
Santa Rosa, CA 95401
707-523-3010 ext. 302
ttiffany@gb-eng.com

QUATTROCCHI KWOK ARCHITECTS

Main Office:
636 Fifth Street, Santa Rosa, CA 95404
Pleasanton Office:
600 Main Street, Suite E,
Pleasanton, CA 94566
(707) 576-0829

LICENSED ARCHITECT
JIM THEISS
LICENSE # C22643
EXP JUNE 30, 2021
STATE OF CALIFORNIA

SIGNED: AUGUST 13, 2019

FREEDOM HIGH SCHOOL

PERFORMING ARTS AND CTE FACILITIES

1050 NEROLY RD,
OAKLEY, CA 94561

LIBERTY UNION HIGH SCHOOL DISTRICT

ARCH PROJECT NO:	1739.00
DRAWN BY:	
DRAWING SCALE:	N.T.S.
PTN:	61721-0068

BID SET

AUGUST 13, 2019

SHEET TITLE

COVER SHEET - VOLUME 1

SHEET NUMBER

G-0.1

BIM Server: BIMCLOUD-QKA - BIMcloud/1739.00 - Freedom High School/1739.00 FREEDOM HS Performing Arts Center:8/6/2019,5:29 PM

ABBREVIATIONS

&	AND	FIXT	FIXTURE	R	RISER
L	ANGLE	FL	FLOOR LINE	R / RAD	RADIUS
@	AT	FLASH	FLASHING	RD	ROOF DRAIN
℄	CENTERLINE	FLUOR	FLUORESCENT	REF	REFERENCE
'	FEET	FLR	FLOOR	REFR	REFRIGERATOR
"	INCHES	FM / FOM	FACE OF MASONRY	REG	REGULAR
d	PENNY	FN	FACE NAIL	REQD	REQUIRED
#	POUND/ NUMBER	FOC	FACE OF CONCRETE	REINF	REINFORCED
		FOF	FACE OF FINISH	RH	ROOF HATCH
AB	ANCHOR BOLT	FOS	FACE OF STUD	RHMS	ROUND HEAD MACHINE SCREW
ABBREV	ABBREVIATION	FRMG	FRAMING	RHWS	ROUND HEAD WOOD SCREW
AC	ASPHALT CONCRETE	FR	FIRE-RESISTANT	RM	ROOM
A/C	AIR CONDITIONING	FRP	FIBERGLASS REINFORCED	RO	ROUGH OPENING
ACC	ACCESSIBLE		PANEL	RWL	RAIN WATER LEADER
ACOUS	ACOUSTICAL	FT	FEET	RWD	REDWOOD
AC T	ACOUSTICAL TILE	FTG	FOOTING		
AD	AREA DRAIN	FURR	FURRING	S	SOUTH
ADJ	ADJUSTABLE			S.A.D.	SEE ARCHITECTURAL DRAWINGS
A.F.F.	ABOVE FINISH FLOOR	GA	GAUGE	S.AV.D.	SEE AUDIOVIDEO DRAWINGS
AGG	AGGREGATE	GALV	GALVANIZED	SC	SOLID CORE
ALUM	ALUMINUM	GB	GRAB BAR	S.C.D.	SEE CIVIL DRAWINGS
ANOD	ANODIZED	GC	GENERAL CONTRACTOR	SCHED	SCHEDULE
APPROX	APPROXIMATE	GI	GALVANIZED IRON	SD	STORM DRAIN
ARCH	ARCHITECTURAL	GL	GLASS/ GLAZING	SECT	SECTION
ASPH	ASPHALT	GLB	GLUE LAMINATED BEAM	S.E.D.	SEE ELECTRICAL DRAWINGS
		GND	GROUND	SEP	SEPARATION
BD	BOARD	GR	GRADE	S.F.P.D.	SEE FIRE PROTECTION DRAWINGS
BITUM	BITUMINOUS	GYP BD	GYPSUM BOARD	SHR	SHOWER
BLDG	BUILDING			SHTG	SHEATHING
BLK	BLOCK	HB	HOSE BIBB	SIM	SIMILAR
BLKG	BLOCKING	HC	HOLLOW CORE	SL	SLIDING
BM	BEAM	HDR	HEADER	S.L.D.	SEE LANDSCAPE DRAWINGS
BOT	BOTTOM	HDWD	HARDWOOD	SM	SHEET METAL
BO	BY OWNER	HDWR	HARDWARE	S.M.D.	SEE MECHANICAL DRAWING
BRK	BREAK	HM	HOLLOW METAL	SOV	SHUT OFF VALVE
BRG	BEARING	HOR	HORIZONTAL	S.P.D.	SEE PLUMBING DRAWINGS
BTWN	BETWEEN	HP	HIGH POINT	SPEC	SPECIFICATION
BU	BUILT-UP	HR	HOUR	SPKR	SPEAKER
BUR	BUILT-UP ROOFING	HSS	HOLLOW STEEL SECTION	SQ	SQUARE
		HT	HEIGHT	SS	STAINLESS STEEL
CAB	CABINET	HTG	HEATING	S.S.D.	SEE STRUCTURAL DRAWINGS
CB	CATCH BASIN	HVAC	HEATING, VENTILATING,	S.TH.D.	SEE THEATER DRAWINGS
CBU	CEMENTITIOUS BACKER UNIT		AIR-CONDITIONING	STA	STATION
CEM	CEMENT			STD	STANDARD
CER	CERAMIC	ID	INSIDE DIAMETER	STL	STEEL
CI	CAST IRON	INSUL	INSULATION	STOR	STORAGE
CIR	CIRCLE	INT	INTERIOR	STRUCT	STRUCTURAL
CJ	CONTROL JOINT	INTEG	INTEGRAL	SUSP	SUSPENDED
CORR	CORRIDOR	INTERMED	INTERMEDIATE	SYM	SYMMETRICAL
CL	CLOSET/ CENTER LINE	INV	INVERT		
CLG	CEILING			T	TREAD
CLR	CLEAR	JH	JOIST HANGER	T&B	TOP & BOTTOM
CLS	CLOSURE	JST	JOIST	TC	TOP OF CURB
CMU	CONCRETE MASONRY UNIT	JT	JOINT	TEL	TELEPHONE
CO	CLEANOUT			TER	TERRAZZO
COL	COLUMN	KIT	KITCHEN	T&G	TONGUE & GROOVE
COMB	COMBINATION	KP	KICK PLATE	TH	THICK
COMP	COMPOSITION			THRU	THROUGH
CONC	CONCRETE	LAB	LABORATORY	TJ	TOOL JOINT
CONN	CONNECTION	LAM	LAMINATE	TN	TOE NAIL
CONST	CONSTRUCTION	LAV	LAVATORY	T.O.D.	TOP OF DECK
CONT	CONTINUOUS	LL	LIVE LOAD	T.O.P.	TOP OF PLATE
CONTR	CONTRACTOR	LP	LOW POINT	T.O.R.	TOP OF ROOF
CT	CERAMIC TILE	LT	LIGHT	T.O.W.	TOP OF WALL
CTR	CENTER			T.P.	TOP OF PAVEMENT
CTSK	COUNTERSINK	MAT	MATERIAL	TRN	TRANSOM
CUST	CUSTODIAN	MAX	MAXIMUM	TRANS	TRANSPARENT
CW	COLD WATER	MB	MACHINE BOLT	TS	TUBE STEEL
		MBR	MODIFIED BITUMEN	TUB	TUBULAR
DBL	DOUBLE		ROOFING	TV	TELEVISION
DEPT	DEPARTMENT	MC	MEDICINE CABINET	TW	TACKWALL
DET	DETAIL	MECH	MECHANICAL	TYP	TYPICAL
DF	DRINKING FOUNTAIN	MED	MEDIUM		
DG	DECOMPOSED	MEMB	MEMBRANE		
	GRANITE	MFR	MANUFACTURER	UNF	UNFINISHED
DI	DRAIN INLET	MH	MANHOLE	U.O.N.	UNLESS OTHERWISE NOTED
DIA	DIAMETER	MIN	MINIMUM	UR	URINAL
DIAG	DIAGONAL	MIR	MIRROR	UTIL	UTILITY
DIM	DIMENSION	MISC	MISCELLANEOUS		
DISP	DISPOSAL	MO	MASONRY OPENING	VB	VAPOR BARRIER
DIV	DIVISION	MOD	MODULAR	VCT	VINYL COMPOSITION TILE
DN	DOWN	MR	MOISTURE RESISTANT	VERT	VERTICAL
DO	DOOR OPENING	MTD	MOUNTED	VEST	VESTIBULE
DIR	DIRECTLY	MTL	METAL	V.I.F.	VERIFY IN FIELD
DR	DOOR	MUL	MULLION	VTR	VENT THROUGH ROOF
DS	DOWN SPOUT			VWC	VINYL WALL COVERING
DSP	DRY STAND PIPE	N	NORTH		
DT	DRAIN TILE	(N)	NEW	W	WEST
DW	DISHWASHER	NAT	NATURAL	W/	WITH
DWG	DRAWING	N.I.C.	NOT IN CONTRACT	WC	WATER CLOSET
DWR	DRAWER	NO	NUMBER	WD	WOOD
		NOM	NOMINAL	WDW	WINDOW
E	EAST	N.T.S.	NOT TO SCALE	WH	WATER HEATER
(E)	EXISTING			W/O	WITHOUT
EA	EACH	O/	OVER	WP	WATER PROOF
EB	EXPANSION BOLT	OA	OVERALL	WR	WATER RESISTANT
EE	EACH END	OBS	OBSCURE	WSCT	WAINSCOT
EF	EXHAUST FAN	OC	ON CENTER	WT	WEIGHT
EJ	EXPANSION JOINT	OD	OUTSIDE DIAMETER	WWY	WALKWAY
EL	ELEVATION GRADE	OF	OVERFLOW		
ELEC	ELECTRICAL	OFCI	OWNER FURNISHED/ CONTRACTOR INSTALLED	YD	YARD
ELEV	ELEVATION	O.L.F.	OCCUPANT LOAD FACTOR		
EMER	EMERGENCY	OFF	OFFICE		
EMT	ELECTRIC METALLIC TUBING	OPNG	OPENING		
ENCL	ENCLOSURE	OPP	OPPOSITE		
EP	ELECTRIC PANEL	OVHD	OVERHEAD		
EQ	EQUAL				
EQUIP	EQUIPMENT	PC	PORTLAND CEMENT		
EQUIV	EQUIVALENT	P.C.F.	POUNDS PER CUBIC FOOT		
ES	EACH SIDE	PDA	POWER DRIVEN ANCHOR		
EW	EACH WAY	PERF	PERFORATED		
EXH	EXHAUST	PH	PLATE HEIGHT		
EXIST	EXISTING	PKG	PARKING		
EXP	EXPANSION	PL	PLATE		
EXT	EXTERIOR	P/L	PROPERTY LINE		
		PLAM	PLASTIC LAMINATE		
F	FACE	PLAS	PLASTER/ PLASTIC		
FA	FIRE ALARM	PLF	POUNDS PER LINEAL FOOT		
FCO	FLOOR CLEAN OUT	PLYWD	PLYWOOD		
FD	FLOOR DRAIN	P.O.C.	POINT OF CONTACT		
FDN	FOUNDATION	PR	PAIR		
FE	FIRE EXTINGUISHER	PROP	PROPERTY		
FEC	FIRE EXTINGUISHER CABINET	PSF	POUNDS PER SQUARE FOOT		
FF	FINISH FLOOR	PT	POINT		
FG	FINISH GRADE	PTDF	PRESSURE TREATED DOUGLAS FIR		
FGL	FIBERGLAS				
FH	FIRE HYDRANT				
FHMS	FLAT HEAD MACHINE SCREW	PTN	PARTITION		
FHS	FIRE HOSE STATION	PTR	PAPER TOWEL RECEPTACLE		
FHWS	FLAT HEAD WOOD SCREW	PVC	POLYVINYL CHLORIDE		
FIN	FINISH	PVMT	PAVEMENT		

LEGEND

ALL NOTES AND SYMBOLS ARE INTENDED TO APPLY AT ALL OTHER LOCATIONS OF SIMILAR GRAPHIC REPRESENTATION. SUCH INDICATIONS MAY BE LIMITED TO PROMOTE CLARITY. NO LIMITATION OF APPLICATION IS INTENDED EXCEPT AS SPECFICALLY NOTED.

AA / A1 — COLUMN GRIDS A AND 1 IN BUILDING A

6'-0" — DIMENSION TO FACE OF STUD OR GRIDLINE

6'-0" — DIMENSION TO FACE OF FINISH

6'-0" — DIMENSION TO CENTER LINE OR COLUMN LINE / GRIDLINE

12'-0" — RELATIVE ELEVATION DIMENSION

B101.A — DOOR A IN ROOM NUMBER 101 IN BUILDING B ACCESSIBLE CLEARANCES SHOWN DASHED

009 — WINDOW NUMBER 009

11 / A-9.12 — DETAIL NUMBER 11 ON SHEET NUMBER A-9.12

3 / A-B6.2 — SECTION NUMBER 3 ON SHEET NUMBER A-B6.2

2 / A-B5.3 — ELEVATION NUMBER 2 ON SHEET NUMBER A-B5.3

FLOOR PLAN	CLASSROOM	ROOM NAME
	A204	ROOM NUMBER 204 IN BUILDING A
	F-4	FLOOR FINISH CODE F-4
	A-A7.6	INTERIOR ELEVATION SHOWN ON SHEET A-A7.6

REFLECTED CLG PLAN	CLASSROOM	ROOM NAME
	A204	ROOM NUMBER 204 IN BUILDING A
	CL-6	CEILING FINISH CODE CL-6
	10'-0"	FINISH CEILING HEIGHT 10'-0"

33 — KEYNOTE NUMBER 33

8" — METAL WALL FRAMING SIZE 8"

50 — WALL ACOUSTIC RATING OF STC 50

C — TOILET ACCESSORY C

222 — ARCHITECTURAL WOODWORK STANDARDS (AWS) CABINET DESIGN SERIES IDENTIFIER

W-2 — FINISH CODE, WALL FINISH 2 SHOWN

E1 — ROOM / BUILDING ACCESSIBLE SIGNAGE TYPE E1. SEE ARCHITECTURAL GRAPHICS PLAN AND ACCESSIBLE SIGNAGE DETAIL

W.P. — RELATIVE ORIGIN OR WORK POINT

A — EQUIPMENT TAG REFER TO EQUIPMENT SCHEDULE

VICINITY MAP

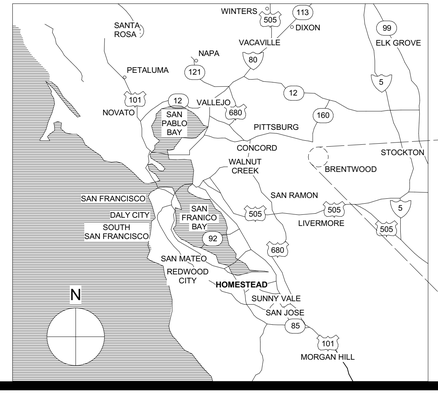

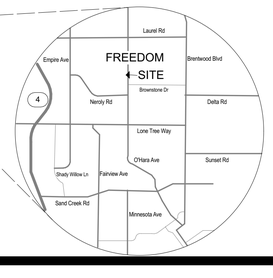

PROJECT DESCRIPTION

THE PROJECT CONSIST OF A 17,589 SF PERFORMING ARTS CENTER BUILDING (PAC) AND A 4,100 SF CAREER TECHNOLOGY EDUCATION BUILDING (CTE).

THE PAC INCLUDES A THEATER WITH 300 SEATS, CHORAL AND THEATER ARTS CLASSROOMS, DRESSING ROOMS, CONTROL BOOTH, TECH LEDGE AND PROP/ SET STORAGE AREAS. CONSTRUCTION TYPE 5B, METAL FRAMED, FULLY SPRINKLERED FOR A-1 AND E OCCUPANCIES.

THE CTE BUILDING CONSIST OF A SHOP SPACE, TEACHING AREA, TOOL AND MATERIAL STORAGES. CONSTRUCTION TYPE 5B, METAL FRAMED, FULLY SPRIKLERED FOR E OCCUPANCY.

GENERAL NEW SITE WORK CONSISTS OF CONCRETE WALKWAYS, AMPHITHEATER, FENCING, BIO-SWALES, LANDSCAPING, SITE LIGHTING, CONSTRUCTION YARD AND PARKING LOT WITH PASSENGER DROP-OFF/ LOADING.

DEFERRED APPROVALS:

ALUMINUM CURTAIN WALL SYSTEMS
PRODUCTION RIGGING SYSTEMS

Orchestra pit cover?

Statement of General Conformance

BY ARCHITECT UTILIZING PLANS (INCLUDING BUT NOT LIMITED TO SHOP DRAWINGS) PREPARED BY OTHER LICENSED DESIGN PROFESSIONALS AND/OR CONSULTANTS

DSA Application No **01-117924** File No **7-H4**

These drawings (marked Civil, Landscape, Structural, Mechanical, Plumbing, Fire Protection, Electrical, and Fire Alarm) and/or specifications and/or calculations for the items listed, have been prepared by other design professionals or consultants who are licensed and/or authorized to prepare such drawings in this state. It has been examined by me for:

1) design intent and appears to meet the appropriate requirements of Title 24, California Code of Regulations and the project specifications prepared by me, and

2) coordination with my plans and specifications and is acceptable for incorporation into the construction of this project.

The Statement of General Conformance "shall not be construed as relieving me of my rights, duties, and responsibilities under Sections 17302 and 81138 of the Education Code and Sections 4-336, 4-341, and 4-344" of Title 24, Part I. (Title 24, Part 1, Section 4-317 (b))

Signature — 8/13/2019 Date

Architect or Engineer designated to be in general responsible charge

Jim Theiss	C22643	June 30, 2021
Print Name	License Number	Expiration Date

GENERAL NOTES

1. ALL WORK IS SHOWN, DESCRIBED OR SPECIFIED IN THE DRAWINGS INDEXED ON THIS PAGE OR IN THE SPECIFICATIONS.
   ALL WORK NOT INDICATED AS EXISTING (E) IS NEW.
2. ALL FRAMING DIMENSIONS ARE TO FACE OF STUD UNLESS NOTED OTHERWISE.
3. DO NOT SCALE DRAWINGS.
4. VERIFY ALL DIMENSIONS WHERE WORK INVOLVES FRAMING FOR WINDOWS, DOORS, OR CABINETS.
5. ONLY WORK SO NOTED IS NOT IN CONTRACT (N.I.C.), ALL N.I.C. ITEMS ARE NOT PART OF DSA APPROVAL.
6. FABRICATION AND INSTALLATION OF DEFERRED SUBMITTAL ITEMS SHALL NOT BE STARTED UNTIL CONTRACTOR'S DRAWINGS, SPECIFICATIONS, AND ENGINEERING CALCULATIONS FOR THE ACTUAL SYSTEMS TO BE INSTALLED HAVE BEEN ACCEPTED AND SIGNED BY THE ARCHITECT OR STRUCTURAL ENGINEER AND APPROVED BY THE DSA. LIST DEFERRED SUBMITTAL ITEMS FOR THIS PROJECT.
7. CHANGES TO THE APPROVED DRAWINGS AND SPECIFICATIONS SHALL BE MADE BY AN ADDENDUM OR A CONSTRUCTION CHANGED DOCUMENT (CCD) APPROVED BY THE DIVISION OF THE STATE ARCHITECT, AS REQUIRED BY SECTION 4-338, PART 1, TITLE 24, CCR.
8. A "DSA CERTIFIED" PROJECT INSPECTOR EMPLOYED BY THE DISTRICT (OWNER) AND APPROVED BY THE DSA SHALL PROVIDE CONTINUOUS INSPECTION OF THE WORK. THE DUTIES OF THE INSPECTOR ARE DEFINED IN SECTION 4-342, PART 1, TITLE 24, CCR.
9. A DSA ACCEPTED TESTING LABORATORY DIRECTLY EMPLOYED BY THE DISTRICT (OWNER) SHALL CONDUCT ALL THE REQUIRED TESTS AND INSPECTIONS FOR THE PROJECT.
10. ALL WORK SHALL CONFORM TO 2016 TITLE 24, CALIFORNIA CODE OF REGULATIONS (CCR).
11. GOVERNING CODES:
    CALIFORNIA CODE OF REGULATIONS TITLE 24 BUILDING STANDARDS CODE:
    PART 1 2016 CALIFORNIA ADMINISTRATIVE CODE (CAC), PART 1, TITLE 24 CCR
    PART 2 2016 CALIFORNIA BUILDING CODE (CBC), PART 2, TITLE 24 CCR
    (2015 INTERNATIONAL BUILDING CODE, VOL. 1 & 2, AND 2016 CALIFORNIA AMENDMENTS)
    PART 3 2016 CALIFORNIA ELECTRICAL CODE (CEC), PART 3, TITLE 24 CCR
    (2014 NATIONAL ELECTRICAL CODE AND 2016 CALIFORNIA AMENDMENTS)
    PART 4 2016 CALIFORNIA MECHANICAL CODE (CMC), PART 4, TITLE 24 CCR
    (2015 IAPMO UNIFORM MECHANICAL CODE AND 2016 CALIFORNIA AMENDMENTS)
    PART 5 2016 CALIFORNIA PLUMBING CODE (CPC), PART 5, TITLE 24 CCR
    (2015 IAPMO UNIFORM PLUMBING CODE AND 2016 CALIFORNIA AMENDMENTS)
    PART 6 2016 CALIFORNIA ENERGY CODE (CEC), PART 6, TITLE 24 CCR
    PART 9 2016 CALIFORNIA FIRE CODE (CFC), PART 9, TITLE 24 CCR
    (2015 INTERNATIONAL FIRE CODE AND 2016 CALIFORNIA AMENDMENTS)
    PART 10 2016 CALIFORNIA EXISTING BUILDING CODE (CEBC), PART 10, TITLE 24 CCR
    (2015 INTERNATIONAL EXISTING BUILDING CODE AND 2016 CALIFORNIA AMENDMENTS)
    PART 11 2016 CALIFORNIA GREEN BUILDING STANDARDS CODE (CAL-GREEN), PART 11, TITLE 24 CCR
    PART 12 2016 CALIFORNIA REFERENCED STANDARDS CODE, PART 12, TITLE 24 CCR

    TITLE 19 CCR, PUBLIC SAFETY CODE, STATE FIRE MARSHAL REGULATIONS
    2010 ADA STANDARDS FOR ACCESSIBILITY DESIGN
    2013 ASME A17.1/CSA B44-13 SAFETY CODE FOR ELEVATORS AND ESCALATORS
12. STANDARD AND GUIDES:

NFPA 13	INSTALLATION OF FIRE SPRINKLER SYSTEMS (CA AMENDED)	2016 EDITION
NFPA 14	INSTALLATION OF STANDPIPE AND HOSE SYSTEMS	2013 EDITION
NFPA 17	DRY CHEMICAL EXTINGUISHING SYSTEMS	2013 EDITION
NFPA 17A	WET CHEMICAL FIRE EXTINGUISHING SYSTEMS	2013 EDITION
NFPA 20	INSTALLATION OF STATIONARY PUMPS FOR FIRE PROTECTION	2016 EDITION
NFPA 22	STANDARD FOR WATER TANKS FOR PRIVATE FIRE PROTECTION	2013 EDITION
NFPA 24	STANDARD FOR THE INSTALLATION OF PRIVATE FIRE SERVICE MAINS AND THEIR APPURTENANCES	2016 EDITION
NFPA 25	CALIFORNIA EDITION - TESTING, MAINTENANCE OF WATER-BASED FIRE PROTECTION SYSTEMS	2013 EDITION
NFPA 72	NATIONAL FIRE ALARM AND SIGNALING CODE (CA AMENDED)	2016 EDITION
NFPA 80	STANDARD FOR FIRE DOORS AND OTHER OPENING PROTECTIVES	2016 EDITION
NFPA 110	EMERGENCY AND STANDBY POWER SYSTEMS	2016 EDITION
NFPA 170	STANDARD FOR FIRE SAFETY AND EMERGENCY SYMBOLS	2015 EDITION
NFPA 2001	STANDARD ON CLEAN AGENT FIRE EXTINGUISHING SYSTEMS	2015 EDITION
UL 300	STANDARD FOR FIRE TESTING OF FIRE EXTINGUISHING SYSTEMS FOR PROTECTION OF COMMERCIAL COOKING EQUIPMENT	2005 (R2010)
UL 464	AUDIBLE SIGNALING DEVICES FOR FIRE ALARM AND SIGNALING SYSTEMS, INCLUDING ACCESSORIES	2003 EDITION
UL 521	STANDARD FOR HEAT DETECTORS FOR FIRE PROTECTIVE SIGNALING SYSTEMS	1999 EDITION
UL 1971	STANDARD FOR SIGNALING DEVICES FOR THE HEARING IMPAIRED	2002 EDITION
ICC 300	STANDARD FOR BLEACHERS, FOLDING AND TELESCOPIC SEATING, AND GRANDSTANDS	2012 EDITION

13. A COPY OF TITLE 24 PARTS 1-5 SHALL BE KEPT ON THE JOB AT ALL TIMES.
14. IN ACCORDANCE WITH TITLE 24 PART 1 CHAPTER 4: THE ADMINISTRATIVE REGULATIONS FOR THE DIVISION OF THE STATE ARCHITECT STRUCTURAL SAFETY (DSA/SS)
    • ALL CONSTRUCTION CHANGE DOCUMENTS AND ADDENDA SHALL BE SIGNED BY THE ARCHITECT AND THE OWNER AND APPROVED BY DSA. CONSTRUCTION CHANGE DOCUMENTS NOT VALID UNTIL APPROVED BY DSA (4-338).
    • ALL TESTS SHALL CONFORM TO THE REQUIREMENTS OF SECTION 4-335 AND APPROVED T & I SHEET (DSA-10)
    • TESTS OF MATERIALS AND TESTING LAB SHALL BE IN ACCORDANCE WITH SECTION 4-335 AND THE DISTRICT SHALL EMPLOY AND PAY THE LAB. COSTS OF RE-TEST MAY BE BACKCHARGED TO THE CONTRACTOR.
    • DSA SHALL BE NOTIFIED AT THE START OF CONSTRUCTION AND PRIOR TO THE PLACEMENT OF CONCRETE IN ACCORDANCE WITH SECTION 4-331
    • INSPECTOR SHALL BE APPROVED BY DSA. INSPECTION SHALL BE IN ACCORDANCE WITH SECTION 4-333(b). THE DUTY OF THE INSPECTOR SHALL BE IN ACCORDANCE WITH SECTION 4-342.
    • SUPERVISION OF CONSTRUCTION BY DSA SHALL BE IN ACCORDANCE WITH SECTION 4-334.
    • VERIFIED REPORTS SHALL BE SUBMITTED BY CONTRACTORS, INSPECTORS (DSA - 6), ARCHITECTS AND ENGINEERS (DSA 6AE) IN ACCORDANCE WITH SECTIONS 4-336 AND 4-343.
    • THE ARCHITECT AND THE STRUCTURAL ENGINEER SHALL PERFORM THEIR DUTIES IN ACCORDANCE WITH SECTIONS 4-333(a) AND 4-341.
    • THE CONTRACTOR SHALL PERFORM HIS DUTIES IN ACCORDANCE WITH SECTION 4-343.
15. FOOD HANDLING FACILITIES SHALL COMPLY WITH ALL LOCAL HEALTH REQUIREMENTS AND CALIFORNIA UNIFORM RETAIL FOOD FACILITIES LAW.
16. THE INTENT OF THE DRAWINGS AND SPECIFICATIONS IS THAT THE WORK OF ALTERATION, REHABILITATION OR RECONSTRUCTION IS TO BE IN ACCORDANCE WITH TITLE 24, C.C.R. SHOULD ANY EXISTING CONDITIONS BE DISCOVERED WHICH IS NOT COVERED BY THE CONTRACT DOCUMENTS WHERE IN THE FINISHED WORK WILL NOT COMPLY WITH SAID TITLE 24 C.C.R. A CONSTRUCTION CHANGE DOCUMENT DETAILING AND SPECIFYING THE REQUIRED REPAIR WORK SHALL BE SUBMITTED TO AND APPROVED BY DSA BEFORE PROCEEDING WITH THE REPAIR WORK. (TITLE 24 PART 1, SECTION 4-338(c))
17. COMPLIANCE WITH CFC CHAPTER 33, FIRE SAFETY DURING CONSTRUCTION AND DEMOLITION AND CBC CHAPTER 33, SAFETY DURING CONSTRUCTION SHALL BE ENFORCED.
18. EMERGENCY VEHICLE ACCESS ROADS AND ON-SITE FIRE HYDRANTS SHALL BE IN SERVICE AND OPERABLE PRIOR TO LOADING THE SITE WITH COMBUSTIBLE MATERIALS.
19. GRADING PLANS, DRAINAGE IMPROVEMENTS, ROAD AND ACCESS REQUIREMENTS, AND ENVIRONMENTAL HEALTH CONSIDERATIONS SHALL COMPLY WITH ALL LOCAL ORDINANCES.

QUATTROCCHI KWOK ARCHITECTS
Main Office:
636 Fifth Street, Santa Rosa, CA 95404
Pleasanton Office:
600 Main Street, Suite E,
Pleasanton, CA 94566
(707) 576-0829

LICENSED ARCHITECT — JIM THEISS — LICENSE # C22643 — EXP JUNE 30, 2021 — STATE OF CALIFORNIA

SIGNED: AUGUST 13, 2019

FREEDOM HIGH SCHOOL

PERFORMING ARTS AND CTE FACILITIES

1050 NEROLY RD,
OAKLEY, CA 94561

LIBERTY UNION HIGH SCHOOL DISTRICT

ARCH PROJECT NO:	1739.00
DRAWN BY:	
DRAWING SCALE:	N.T.S.
PTN:	61721-0068

BID SET

AUGUST 13, 2019

SHEET TITLE

ABBREVIATIONS AND NOTES

SHEET NUMBER

G-0.2

BIM Server: BIMCLOUD-GKA - BIMcloud/1739.00 - Freedom High School/1739.00 FREEDOM HS Performing Arts Center.8/6/2019 5:29 PM

SHEET INDEX

VOLUME 1 OF 2

GENERAL
G-0.1 COVER SHEET VOLUME 1
G-0.2 ABBREVIATIONS AND NOTES
G-0.2,2.1 SHEET INDEX
G-0.3 OVERALL CAMPUS SITE PLAN
G-0.4 FIRE & LIFE SAFETY SITE PLAN
G-0.5 ACCESSIBILITY SITE PLAN
G-0.6 BLDG A CODE ANALYSIS PLAN
G-0.7 BLDG B CODE ANALYSIS PLAN

CIVIL
C-1.0 EXISTING CONDITIONS / DEMOLITION
C-2.0 HORIZONTAL CONTROL PLAN
C-2.1 HORIZONTAL CONTROL PLAN
C-3.0 PAVEMENT/ CURB TYPE PLAN
C-3.1 CURB TYPE DETAILS
C-4.0 UTILITY PLAN
C-4.1 UTILITY PLAN
C-4.2 UTILITY PLAN
C-4.3 UTILITY PLAN
C-4.4 UTILITY PLAN
C-5.0 GRADING AND DRAINAGE PLAN
C-5.1 GRADING AND DRAINAGE PLAN
C-5.2 GRADING AND DRAINAGE PLAN
C-5.3 GRADING AND DRAINAGE PLAN
C-5.4 GRADING & STRIPING PLAN
C-6.0 SIGNING & STRIPING PLAN
C-7.0 PRELIMINARY STORM WATER CONTROL PLAN
C-8.0 EROSION CONTROL PLAN

LANDSCAPE
L1.0 MATERIAL AND DETAIL REFERENCE PLAN
L1.1 CONSTRUCTION DETAILS
L1.2 CONSTRUCTION DETAILS
L1.3 CONSTRUCTION DETAILS
L1.4 CONSTRUCTION DETAILS
L1.5 CONSTRUCTION DETAILS
L1.6 CONSTRUCTION DETAILS
L2.0 LAYOUT PLAN
L3.0 IRRIGATION PLAN
L3.1 IRRIGATION LEGEND
L3.2 IRRIGATION NOTES & DETAILS
L3.3 IRRIGATION DETAILS & SCHEDULES
L3.4 IRRIGATION DETAILS
L3.5 IRRIGATION DETAILS
L3.6 IRRIGATION DETAILS
L3.7 IRRIGATION DETAILS
L4.0 PLANTING PLAN
L4.1 PLANTING DETAILS

ARCHITECTURAL
A-1.1 PARTIAL SITE PLAN

BUILDING A
A-A2.1 BLDG A FIRST FLOOR PLAN
A-A2.2 BLDG A FIRST FLOOR DIMENSION PLAN
A-A2.3 BLDG A CONTROL BOOTH LEVEL FLOOR PLAN
A-A2.4 BLDG A CONTROL BOOTH LEVEL DIMENSION PLAN
A-A2.5 BLDG A TECH LEDGE FLOOR PLAN
A-A2.6 BLDG A TECH LEDGE DIMENSION PLAN
A-A2.7 BLDG A ENLARGED STAIR AND LIFT PLANS
A-A2.8 BLDG A ENLARGED STAIR AND LIFT PLANS
A-A3.1 BLDG A FIRST FLOOR REFLECTED CEILING PLAN
A-A3.2 BLDG A CONTROL BOOTH LEVEL REFLECTED CEILING PLAN
A-A3.3 BLDG A TECH LEDGE REFLECTED CEILING PLAN
A-A4.1 BLDG A LOWER ROOF PLAN
A-A4.2 BLDG A UPPER ROOF PLAN

A-A5.1 BLDG A EXTERIOR ELEVATIONS
A-A5.2 BLDG A EXTERIOR ELEVATIONS
A-A5.3 BLDG A EXTERIOR ELEVATIONS - FINISH LAYOUT
A-A5.4 BLDG A EXTERIOR ELEVATIONS - FINISH LAYOUT

A-A6.1 BLDG A BUILDING SECTIONS
A-A6.2 BLDG A BUILDING SECTIONS
A-A6.3 BLDG A BUILDING SECTIONS
A-A6.10 BLDG A WALL SECTIONS
A-A6.11 BLDG A WALL SECTIONS
A-A6.12 BLDG A WALL SECTIONS
A-A6.13 BLDG A WALL SECTIONS
A-A6.14 BLDG A WALL SECTIONS
A-A6.15 BLDG A WALL SECTIONS
A-A6.16 BLDG A WALL SECTIONS
A-A6.17 BLDG A WALL SECTIONS
A-A6.18 BLDG A WALL SECTIONS
A-A6.19 BLDG A WALL SECTIONS
A-A6.20 BLDG A WALL SECTIONS

A-A7.1 BLDG A INTERIOR ELEVATIONS
A-A7.2 BLDG A INTERIOR ELEVATIONS
A-A7.3 BLDG A INTERIOR ELEVATIONS
A-A7.4 BLDG A INTERIOR ELEVATIONS
A-A7.5 BLDG A INTERIOR ELEVATIONS
A-A7.6 BLDG A INTERIOR ELEVATIONS
A-A7.7 BLDG A INTERIOR ELEVATIONS
A-A7.8 BLDG A INTERIOR ELEVATIONS
A-A7.9 BLDG A INTERIOR ELEVATIONS
A-A7.10 BLDG A INTERIOR ELEVATIONS - WALL PANELS
A-A7.11 BLDG A INTERIOR ELEVATIONS - WALL PANELS
A-A7.12 BLDG A INTERIOR ELEVATIONS
A-A7.13 BLDG A INTERIOR ELEVATIONS
A-A7.14 BLDG A INTERIOR ELEVATIONS
A-A7.15 BLDG A INTERIOR ELEVATIONS
A-A7.16 BLDG A INTERIOR ELEVATIONS
A-A7.17 BLDG A INTERIOR ELEVATIONS
A-A7.18 BLDG A INTERIOR ELEVATIONS

BUILDING B
A-B2.1 BLDG B FLOOR PLAN
A-B3.1 BLDG B REFLECTED CEILING PLAN
A-B4.1 BLDG B ROOF PLAN
A-B5.1 BLDG B EXTERIOR ELEVATIONS
A-B6.1 BLDG B BUILDING SECTIONS
A-B6.10 BLDG B WALL SECTIONS
A-B6.11 BLDG B WALL SECTIONS
A-B7.1 BLDG B INTERIOR ELEVATIONS
A-B7.2 BLDG B INTERIOR ELEVATIONS

VOLUME 2 OF 2

GENERAL
G-0.1 COVER SHEET VOLUME 2
G-0.2.2 SHEET INDEX

MECHANICAL
M1.1 MECHANICAL SCHEDULES & LEGEND
M1.2 MECHANICAL SCHEDULES
M-A2.1 MECHANICAL FLOOR PLAN
M-A2.2 MECHANICAL CONTROL ROOM LEVEL
M-A2.3 MECHANICAL TECH LEDGE LEVEL
M-3.1 MECHANICAL PIPING PLAN
M-3.2 MECHANICAL PIPING CONTROL ROOM LEVEL
M-3.3 MECHANICAL PIPING TECH LEDGE LEVEL
M-B2.1 CTE BUILDING MECHANICAL PLAN
M-4.1 MECHANICAL DETAILS
M-4.2 MECHANICAL DETAILS
M-4.3 MECHANICAL DETAILS
M-4.4 MECHANICAL DETAILS
M-5.1 MECHANICAL CONTROLS
M-5.2 MECHANICAL CONTROLS
M-5.3 MECHANICAL CONTROLS
M-5.4 MECHANICAL CONTROLS
M-5.5 MECHANICAL CONTROLS
M-5.6 OPM-0043-13 REFERENCE

PD1.0 GAS DEMOLITION SITE PLAN
P1.1 PLUMBING SCHEDULES & LEGENDS
P-A2.1 PLUMBING FLOOR PLAN
P-A2.2 PLUMBING CONTROL ROOM FLOOR PLAN
P-A2.3 PLUMBING TECH LEDGE LEVEL
P-A3.1 PLUMBING WASTE & VENT ENLARGED PLANS
P-A3.2 PLUMBING WATER & GAS ENLARGED PLANS
P-B2.1 CTE BUILDING WASTE & VENT FLOOR PLAN
P-B2.2 CTE BUILDING WATER & GAS FLOOR PLAN
P-4.1 PLUMBING DETAILS
P-4.2 PLUMBING DETAILS
P-4.3 PLUMBING DETAILS

ELECTRICAL
E-0.1 SYMBOLS LIST, GENERAL NOTES & LIST OF DRAWINGS
E-0.2 LUMINAIRE SCHEDULE
E-0.3 LUMINAIRE SCHEDULE
E-1.0 OVERALL SITE PLAN POWER & SIGNAL
E-1.1 SITE PLAN POWER & SIGNAL
E-1.2 SITE PLAN LIGHTING
E-A2.1 BUILDING A FIRST FLOOR PLAN - LIGHTING- PAC
E-A2.2 BUILDING A CONTROL BOOTH LEVEL PLAN - LIGHTING- PAC
E-A2.3 BUILDING A TECH LEDGE FLOOR PLAN - LIGHTING- PAC
E-B2.1 BUILDING B FIRST FLOOR PLAN - LIGHTING- CTE
E-PL-1.01 PRODUCTION LIGHTING PLAN AT LEVEL 1 - ELECTRICAL
E-PL-1.02 PRODUCTION LIGHTING PLAN AT LEVEL 2 - ELECTRICAL
E-PL-1.03 PRODUCTION LIGHTING PLAN AT LEVEL 3 - ELECTRICAL
E-PL-5.01 PRODUCTION LIGHTING SINGLE LINE DIAGRAM - ELECTRICAL

E-PS-1.01 PRODUCTION SEATING PLAN AT LEVEL 1 - ELECTRICAL

E-A3.1 BUILDING A FIRST FLOOR PLAN - POWER & SIGNAL PAC
E-A3.2 BUILDING A CONTROL BOOTH LEVEL PLAN - POWER &SIGNALPAC
E-A3.3 BUILDING A TECH LEDGE FLOOR PLAN - POWER & SIGNAL PAC
E-B3.1 BUILDING B FIRST FLOOR PLAN - POWER & SIGNAL CTE
E-4.1 FIRST FLOOR PARTIAL PLANS - ELECTRICAL
E-5.1 SINGLE LINE DIAGRAM - POWER
E-5.2 SINGLE LINE DIAGRAM - SIGNAL
E-5.3 SINGLE LINE DIAGRAMS - POWER
E-5.4 HOUSE LIGHTING CONTROLS
E-5.5 LIGHTING CONTROL DIAGRAMS
E-6.1 PANEL SCHEDULES
E-6.2 PANEL SCHEDULES
E-6.3 PANEL SCHEDULES
E-7.1 DETAILS
E-7.2 DETAILS
E-7.3 DETAILS
E-7.4 DETAILS
E-7.5 DETAILS
E-7.6 DETAILS
E-7.7 DETAILS

FE0.1 FIRE ALARM NOTES, DETAILS & COMPONENTS LIST
FE1.1 SITE PLAN - FIRE ALARM
FE-A3.1 BUILDING A FIRST FLOOR PLAN - FIRE ALARM PAC
FE-A3.2 BUILDING A CONTROL BOOTH LEVEL PLAN - FIRE ALARM PAC
FE-A3.3 BUILDING A TECH LEDGE FLOOR PLAN - FIRE ALARM PAC
FE-B3.1 BUILDING B FIRST FLOOR PLAN - FIRE ALARM
FE5.1 RISER DIAGRAM - FIRE ALARM - CTE
FE6.1 CALCULATIONS - FIRE ALARM

THEATRE
PL-1.01 PRODUCTION LIGHTING LEVEL 1 DEVICE PLANS
PL-1.03 PRODUCTION LIGHTING LEVEL 3 DEVICE PLANS
PL-3.01 PRODUCTION LIGHTING SINGLE LINE DIAGRAM
PL-3.02 PRODUCTION LIGHTING DEVICE SCHEDULE
PL-5.01 PRODUCTION LIGHTING DEVICE DETAILS
PL-5.02 PRODUCTION LIGHTING MOUNTING DETAILS
PL-5.03 PRODUCTION LIGHTING PANEL MOUNTINGS
PL-5.04 PRODUCTION LIGHTING CONTROL EQUIPMENT RACK PLATES

PR-1.01 PRODUCTION RIGGING - LEVEL 1 PLAN
PR-1.02 PRODUCTION RIGGING - LEVEL 2 PLAN
PR-1.03 PRODUCTION RIGGING - LEVEL 3 PLAN
PR-3.01 PRODUCTION RIGGING CENTERLINE SECTION
PR-3.02 PRODUCTION RIGGING FOH SECTIONS
PR-3.03 PRODUCTION RIGGING STAGE SECTION
PR-3.04 PRODUCTION RIGGING PROSCENIUM ELEVATION
PR-4.01 PRODUCTION RIGGING PIT FILLER
PR-5.01 PRODUCTION RIGGING TENSION GRID DETAIL
PR-5.02 PRODUCTION RIGGING MOUNTING DETAILS
PR-5.03 PRODUCTION RIGGING MOUNTING DETAILS
PR-5.04 PRODUCTION RIGGING MOUNTING DETAILS
PR-5.05 PRODUCTION RIGGING LOOSE PIPE DETAIL
PR-5.06 PRODUCTION RIGGING RISER DIAGRAMS
PR-5.07 PRODUCTION RIGGING DETAILS
PR-5.08 PRODUCTION RIGGING SIGNAGE

PS-1.01 PRODUCTION SEATING - LEVEL 1 PLAN
PS-3.01 PRODUCTION SEATING CL SECTION & DTLS

AV-0.01 AV ISOLATED GROUND, CONDUIT, & ALS INFO
AV-0.02 AV WIRETYPE SCHEDULE
AV-0.03 AV DEVICE SCHEDULE
AV-1.01 AV DEVICE PLAN AT LEVEL 1
AV-1.01b AV DEVICE PLAN AT LEVEL 1
AV-1.02 AV DEVICE PLAN AT LEVEL 2
AV-1.03 AV DEVICE PLAN AT LEVEL 3
AV-2.01 AV DEVICE RCP AT LEVEL 1
AV-2.02 AV DEVICE RCP AT LEVEL 2
AV-3.01 AUDIO PLAN & SECTION AT THEATRE
AV-3.51 VIDEO PLAN & SECTION AT THEATRE
AV-4.01 AV ENLARGED PLANS
AV-5.01 WIRE AND CONDUIT RISER DIAGRAMS
AV-5.10 AUDIO BLOCK DIAGRAM AT THEATRE
AV-5.11 VIDEO BLOCK DIAGRAM AT THEATRE
AV-5.12 PROGRAM/ PAGING BLOCK DIAGRAM AT THEATRE
AV-5.13 CONTROL BLOCK DIAGRAM AT THEATRE
AV-5.20 AV BLOCK DIAGRAM AT CHORAL
AV-5.21 AV BLOCK DIAGRAM AT CLASS

THEATRE CONT.
AV-7.01 AV PANEL ELEVATIONS
AV-7.02 AV PANEL ELEVATIONS
AV-7.03 AV PANEL ELEVATIONS
AV-7.10 AV MOUNTING DETAILS
AV-7.11 AV MOUNTING DETAILS
AV-7.12 AV MOUNTING DETAILS
AV-7.13 AV MOUNTING DETAILS
AV-7.14 AV MOUNTING DETAILS

FIRE PROTECTION
FP0.1 LEGEND, NOTES, AND DETAILS - FIRE PROTECTION
FP1.1 SITE PLAN - FIRE PROTECTION
FP-A2.1 FIRST FLOOR PIPING PLAN - FIRE PROTECTION
FP-A2.2 CONTROL BOOTH PIPING PLAN - FIRE PROTECTION
FP-A2.3 TECH LEDGE PIPING PLAN - FIRE PROTECTION
FP-A3.1 FIRST FLOOR CEILING PLAN - FIRE PROTECTION
FP-A3.2 CONTROL BOOTH CEILING PLAN - FIRE PROTECTION
FP-A3.3 TECH LEDGE CEILING PLAN - FIRE PROTECTION
FP-A4.1 SECTIONS - FIRE PROTECTION
FP-A4.2 SECTIONS - FIRE PROTECTION
FP-B2.1 CTE BUILDING PIPING PLAN - FIRE PROTECTION
FP-B3.1 CTE BUILDING CEILING PLAN - FIRE PROTECTION
FP-B4.1 SECTIONS - FIRE PROTECTION
FP-6.1 DETAILS - FIRE PROTECTION
FP-6.2 DETAILS - FIRE PROTECTION
FP-6.3 DETAILS - FIRE PROTECTION
FP-6.4 DETAIL AND SEISMIC BRACING CALCULATIONS - FIRE PROTECTION

CATHODIC PROTECTION
CP-1.2 CP DETAILS
CP-1.3 CP DETAILS

TITLE 24 COMPLIANCE DOCUMENTATION
T-1 TITLE 24 BLDG A
T-2 TITLE 24 BLDG A
T-3 TITLE 24 BLDG A
T-4 TITLE 24 BLDG A
T-5 TITLE 24 BLDG A
T-6 TITLE 24 BLDG A
T-7 TITLE 24 BLDG A
T-8 TITLE 24 BLDG A
T-9 TITLE 24 BLDG A
T-10 TITLE 24 BLDG A
T-11 TITLE 24 BLDG A & B
T-12 TITLE 24 BLDG B
T-13 TITLE 24 BLDG B
T-14 TITLE 24 BLDG B

TOTAL NUMBER SHEETS = 332

ARCHITECTURAL CONTINUED...
A-8.1 DOOR SCHEDULE
A-8.2 WINDOW SCHEDULE
A-8.3 WINDOW SCHEDULE

A-9.1 WALL DETAILS - METAL FRAMING
A-9.2 WALL DETAILS - METAL FRAMING
A-9.3 WALL DETAILS - WOOD FRAMING
A-9.4 GENERAL WALL DETAILS
A-9.5 OPENING DETAILS - METAL FRAMING
A-9.6 OPENING DETAILS - METAL FRAMING
A-9.7 OPENING DETAILS - WOOD FRAMING
A-9.8 METAL ROOFING DETAILS
A-9.9 METAL ROOFING DETAILS
A-9.10 METAL ROOFING DETAILS - UNCONDITIONED
A-9.11 MODIFIED BITUMEN ROOFING - METAL FRAMING
A-9.12 MODIFIED BITUMEN ROOFING - METAL FRAMING
A-9.13 MODIFIED BITUMEN ROOFING - WOOD FRAMING
A-9.14 GUTTER AND RWL DETAILS
A-9.15 ROOF HATCHES AND ACCESS LADDERS
A-9.16 RAIN CANOPY & ENTRY CANOPY DETAILS
A-9.17 STAIR & ACC LIFT DETAILS

A-10.1 INTERIOR DETAILS - METAL FRAMING
A-10.2 INTERIOR DETAILS - METAL FRAMING
A-10.3 INTERIOR DETAILS - WOOD FRAMING
A-10.4 CEILING DETAILS
A-10.5 CEILING DETAILS
A-10.6 CASEWORK DETAILS
A-10.7 CASEWORK DETAILS
A-10.8 THEATER DETAILS
A-10.9 SIGNAGE DETAILS

ARCHITECTURAL GRAPHICS
AG-A2.1 BLDG A FIRST FLOOR GRAPHICS PLAN
AG-A2.2 BLDG A CONTROL RM GRAPHICS PLAN
AG-A2.3 BLDG A TECH LEDGE GRAPHICS PLAN
AG-B2.1 BLDG B FIRST FLOOR GRAPHICS PLAN

STRUCTURAL
S-0.1 GENERAL NOTES
S-0.2 GENERAL NOTES & TYPICAL CONCRETE DETAIL
S-1.1 TYPICAL CONCRETE DETAILS
S-1.2 TYPICAL WOOD DETAILS
S-1.3 TYPICAL WOOD DETAILS
S-1.4 TYPICAL METAL STUD ELEV & CONNECTION DETAILS
S-1.5 TYPICAL METAL STUD CONNECTION DETAILS
S-1.6 TYPICAL METAL STUD SOFFIT & MISCELLANEOUS DETAILS
S-1.7 TYPICAL METAL DECKING DETAILS
S-A2.1 BLDG A FOUNDATION PLAN
S-A2.2 BLDG A CONTROL ROOM FRAMING PLAN
S-A2.3 BLDG A TECH LEDGE/CATWALK AND LOW ROOF FRAMING PLAN
S-A2.4 BLDG A LOBBY ROOF FRAMING PLAN
S-A2.5 BLDG A ROOF FRAMING PLAN
S-A3.1 BLDG A FRAME ELEVATIONS
S-A3.2 BLDG A FRAME ELEVATIONS
S-A3.3 TRUSS ELEVATION AND DETAILS
S-B2.1 BLDG B FOUNDATION
S-B2.2 BLDG B ROOF FRAMING PLAN
S-4.1 FOUNDATION DETAILS
S-4.2 FOUNDATION DETAILS
S-4.3 FOUNDATION DETAILS
S-5.1 STEEL FRAMING DETAILS
S-5.2 STEEL FRAMING DETAILS
S-5.3 STEEL BRACED FRAME DETAILS
S-5.4 STEEL BRACED FRAME & FRAMING DETAILS
S-5.5 BEARING COLD FORMED STEEL AND STEEL DETAILS
S-5.6 COLD FORMED STEEL DETAILS
S-5.7 CATWALK AND PROSCENIUM DETAILS
S-5.8 STEEL STAIR DETAILS
S-5.9 COLD FORMED STEEL DETAILS
S-6.1 WOOD DETAILS
S-6.2 STRUCTURAL DETAILS
S-7.1 RAIN CANOPY DETAILS

QUATTROCCHI KWOK ARCHITECTS
Main Office:
636 Fifth Street, Santa Rosa, CA 95404
Pleasanton Office:
600 Main Street, Suite E,
Pleasanton, CA 94566
(707) 576-0829

LICENSED ARCHITECT
JIM THEISS
LICENSE # C22643
EXP JUNE 30, 2021
STATE OF CALIFORNIA

SIGNED: AUGUST 13, 2019

FREEDOM HIGH SCHOOL

PERFORMING ARTS AND CTE FACILITIES

1050 NEROLY RD,
OAKLEY, CA 94561

LIBERTY UNION HIGH SCHOOL DISTRICT

ARCH PROJECT NO: 1739.00
DRAWN BY:
DRAWING SCALE: N.T.S.
PTN: 61721-0068

BID SET

AUGUST 13, 2019

SHEET TITLE

SHEET INDEX

SHEET NUMBER

G-0.2.1

BIM Server: BIMCLOUD-QKA - BIMcloud/1739.00 - Freedom High School/1739.00 FREEDOM HS Performing Arts Center 8/6/2019 7:54 PM

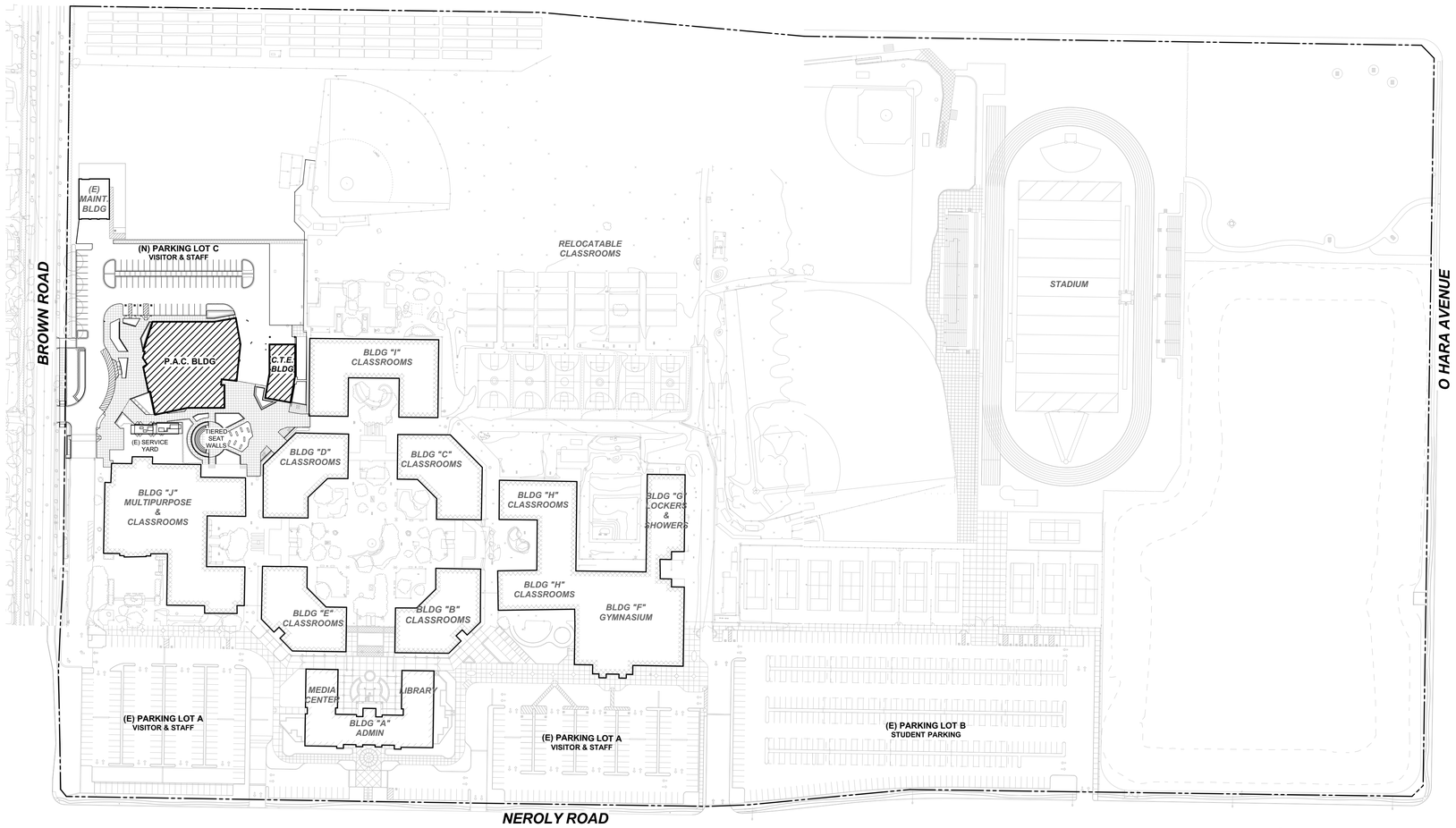

SITE PLAN NOTES

1. SEE SHEET G-0.6 AND G-0.7 FOR CODE INFORMATION
2. SEE SHEET G-0.5 FOR DSA APPL. NUMBERS AND ACCESSIBILITY REFER TO CIVIL ENGINEERING DWGS FOR SIDEWALK GRADES
3. REFER TO CIVIL ENGINEERING DRAWINGS AND LANDSCAPE PLANS FOR SITE FEATURES NOT OTHERWISE INDICATED.
4. CONCRETE SHALL SLOPE 1/8" PER FOOT AWAY FROM BUILDINGS.

SITE PLAN LEGEND

- NEW BUILDING
- (E) BUILDING TO REMAIN
- 20' WIDE EMERGENCY VEHICLE ACCESS (E.V.A.)
- (E) 20' WIDE EMERGENCY VEHICLE ACCESS (E.V.A.)
- PROPERTY LINE (APPROX)
- (E)FH — (E) FIRE HYDRANT, S.C.D.
- FH — (N) OR RELOCATED (E) FIRE HYDRANT, S.C.D.

QUATTROCCHI KWOK ARCHITECTS

Main Office:
636 Fifth Street, Santa Rosa, CA 95404
Pleasanton Office:
600 Main Street, Suite E,
Pleasanton, CA 94566
(707) 576-0829

LICENSED ARCHITECT
JIM THEISS
LICENSE # C22643
EXP JUNE 30, 2021
STATE OF CALIFORNIA

SIGNED: AUGUST 13, 2019

FREEDOM HIGH SCHOOL

PERFORMING ARTS AND CTE FACILITIES

1050 NEROLY RD,
OAKLEY, CA 94561

LIBERTY UNION HIGH SCHOOL DISTRICT

ARCH PROJECT NO:	1739.00
DRAWN BY:	
DRAWING SCALE:	1" = 100'-0"
PTN:	61721-0068

BID SET

AUGUST 13, 2019

SHEET TITLE

OVERALL CAMPUS SITE PLAN

SHEET NUMBER

G-0.3

BIM Server: BIMCLOUD-QKA - BIMcloud/1739.00 - Freedom High School/1739.00 FREEDOM HS Performing Arts Center:8/6/2019 3:40 PM

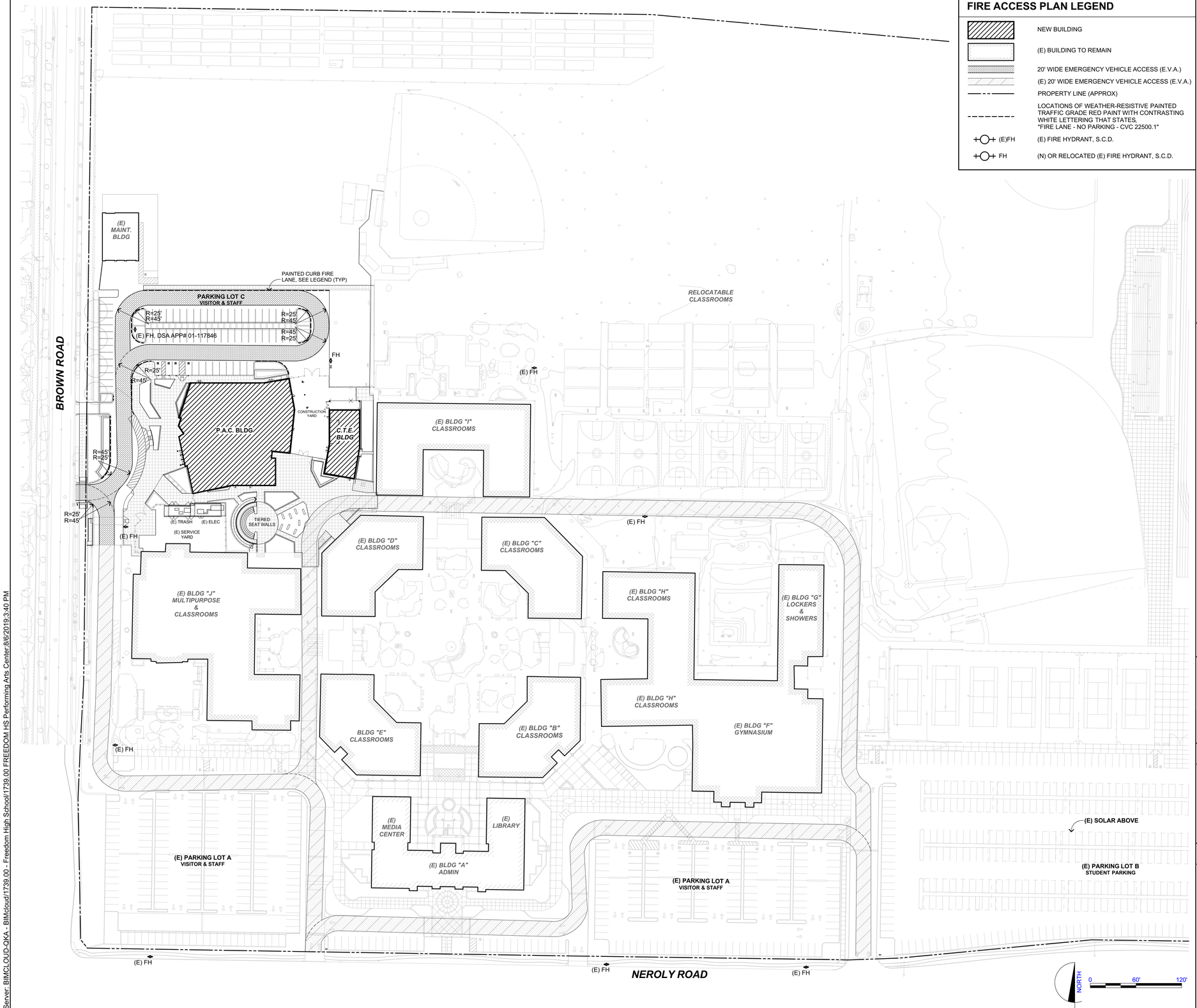

FIRE ACCESS PLAN LEGEND

- NEW BUILDING
- (E) BUILDING TO REMAIN
- 20' WIDE EMERGENCY VEHICLE ACCESS (E.V.A.)
- (E) 20' WIDE EMERGENCY VEHICLE ACCESS (E.V.A.)
- PROPERTY LINE (APPROX)
- LOCATIONS OF WEATHER-RESISTIVE PAINTED TRAFFIC GRADE RED PAINT WITH CONTRASTING WHITE LETTERING THAT STATES, "FIRE LANE - NO PARKING - CVC 22500.1"
- (E)FH — (E) FIRE HYDRANT, S.C.D.
- FH — (N) OR RELOCATED (E) FIRE HYDRANT, S.C.D.

DSA **810**

FIRE & LIFE SAFETY SITE CONDITIONS SUBMITTAL

To facilitate the Division of the State Architect's (DSA) fire and life safety plan review of project site conditions, DSA requires the design professional to provide the following information at time of project submittal for projects consisting of construction of a new campus, construction of new building(s), additions to existing buildings, and for site alternate design means for fire department emergency vehicle access, and fire suppression water supply.

Information associated with compliance items 1–3 below is to be provided for all project types indicated above. Information associated with items 4–7 is to be completed when an alternate means is utilized. Acknowledgement by the school district and signature from the local fire authority (LFA) is only required when an alternate design means is being requested.

Page 1 of the completed form must be imaged onto the fire access site plan. When an alternate design/means is proposed, completed pages 1 and 2 are to be imaged on the fire access site plan.

For additional information refer to the instructions at the end of this form and DSA Policy 09-01.

PROJECT INFORMATION

School District/Owner: Liberty Union High School District
Project Name/School: Freedom H.S. Performing Arts Center and CTE Building
Project Address: 1050 Neroly Road, Oakley, CA 94561

FIRE & LIFE SAFETY INFORMATION

1.	Has a fire hydrant flow test been performed within the past 12 months? *(If yes, provide a copy of the test data.)*	Yes ☒		No ☐	
2.	Was the fire hydrant water flow test performed as part of this LFA review?	Yes ☒		No ☐	
3.	Is the project located within a designated fire hazard severity zone as established by Cal-Fire? *(If yes, indicate fire hazard zone classification below)*	Yes ☐		No ☒	
	Refer to the following for fire hazard zone locations: www.fire.ca.gov/fire_prevention/fire_prevention_wildland_zones_maps	Moderate ☐	High ☐	Very High ☐	
	Wildland Interface Area (WIFA) *(If any designations are checked, project design must meet the requirements of CBC Chapter 7A.)*			WIFA ☐	

CONDITION MEANS AND METHODS RESOLUTION

		ALTERNATE ACCEPTED Yes	No	N/A	N/R
4.	Emergency vehicle access roadways do not meet CFC requirements.				
4a.	**Acceptable Alternate:** Emergency vehicle and personnel access as proposed by the project architect is acceptable for providing fire suppression and protection of life and property.	X			
5.	**Fire Hydrants:** Number and spacing does not meet CFC requirements.			X	
5a.	**Acceptable Alternate:** Number of fire hydrants and spacing as proposed by the project architect is acceptable for fire suppression and protection of life and property.				
6.	**Fire Hydrants:** Water flow and pressure are less than CFC minimum.			X	
6a.	**Acceptable Alternate**: The available flow and pressure is acceptable for providing fire suppression and protection of life and property.				
7.	Location of fire department connection(s) serving fire sprinkler systems or standpipe systems does not meet CFC requirements.			X	
7a.	**Acceptable Alternate:** The location of fire department connection serving the fire sprinkler system and/or standpipe system is acceptable for providing fire suppression and protection of life and property.				

DSA 810 (rev 10-22-18) DIVISION OF THE STATE ARCHITECT — DEPARTMENT OF GENERAL SERVICES — Page 1 of 4 STATE OF CALIFORNIA

DSA 810
FIRE & LIFE SAFETY SITE CONDITIONS SUBMITTAL

School District Acceptance of Acceptable Design Alternates

By signing this form, the school district acknowledges and accepts the proposed design as an alternative to California Building Code (CBC) and California Fire Code (CFC) minimum requirements, as indicated by one or more of the conditions indicated at items 4a, 5a, 6a or 7a, for providing fire and life safety protection of life and property.

Accepted by: Liz Robbins Title: CBO

Signature: Liz Robbins Date: 8/2/19

LOCAL FIRE AUTHORITY (LFA) INFORMATION

LFA Agency Name: East Contra Costa Fire Protection District
LFA Review Official: Mike Stewart CSG Consultants
Title: Fire Service Specialist Work Phone: 916-492-2275
Work E-mail: mikes@csgengr.com
LFA Reviewer's Signature: Mike Stewart Date: 07/18/19

DSA 810 (rev 10-22-18) DIVISION OF THE STATE ARCHITECT — DEPARTMENT OF GENERAL SERVICES — Page 2 of 4 STATE OF CALIFORNIA

EAST CONTRA COSTA FIRE

THESE PLANS AND DETAILS ARE **APPROVED** East Contra Costa Fire Protection District

By: Mike Stewart Date: 07/18/19

FIRE ACCESS NOTES

1. FOR DSA APPLICATION NUMBERS SEE G-0.5
2. PERFORMING ARTS AND CTE FACILITIES ARE SPRINKLERED, S.F.P.D.

KEYPLAN

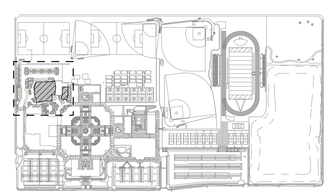

QUATTROCCHI KWOK ARCHITECTS
Main Office:
636 Fifth Street, Santa Rosa, CA 95404
Pleasanton Office:
600 Main Street, Suite E,
Pleasanton, CA 94566
(707) 576-0829

LICENSED ARCHITECT
JIM THEISS
LICENSE # C22643
EXP JUNE 30, 2021
STATE OF CALIFORNIA

SIGNED: AUGUST 13, 2019

FREEDOM HIGH SCHOOL

PERFORMING ARTS AND CTE FACILITIES

1050 NEROLY RD,
OAKLEY, CA 94561

LIBERTY UNION HIGH SCHOOL DISTRICT

ARCH PROJECT NO:	1739.00
DRAWN BY:	
DRAWING SCALE:	1" = 60'-0"
PTN:	61721-0068

BID SET

AUGUST 13, 2019

SHEET TITLE

FIRE & LIFE SAFETY SITE PLAN

SHEET NUMBER

G-0.4

BIM Server: BIMCLOUD-QKA - BIMcloud/1739.00 - Freedom High School/1739.00 FREEDOM HS Performing Arts Center;8/6/2019;3:40 PM

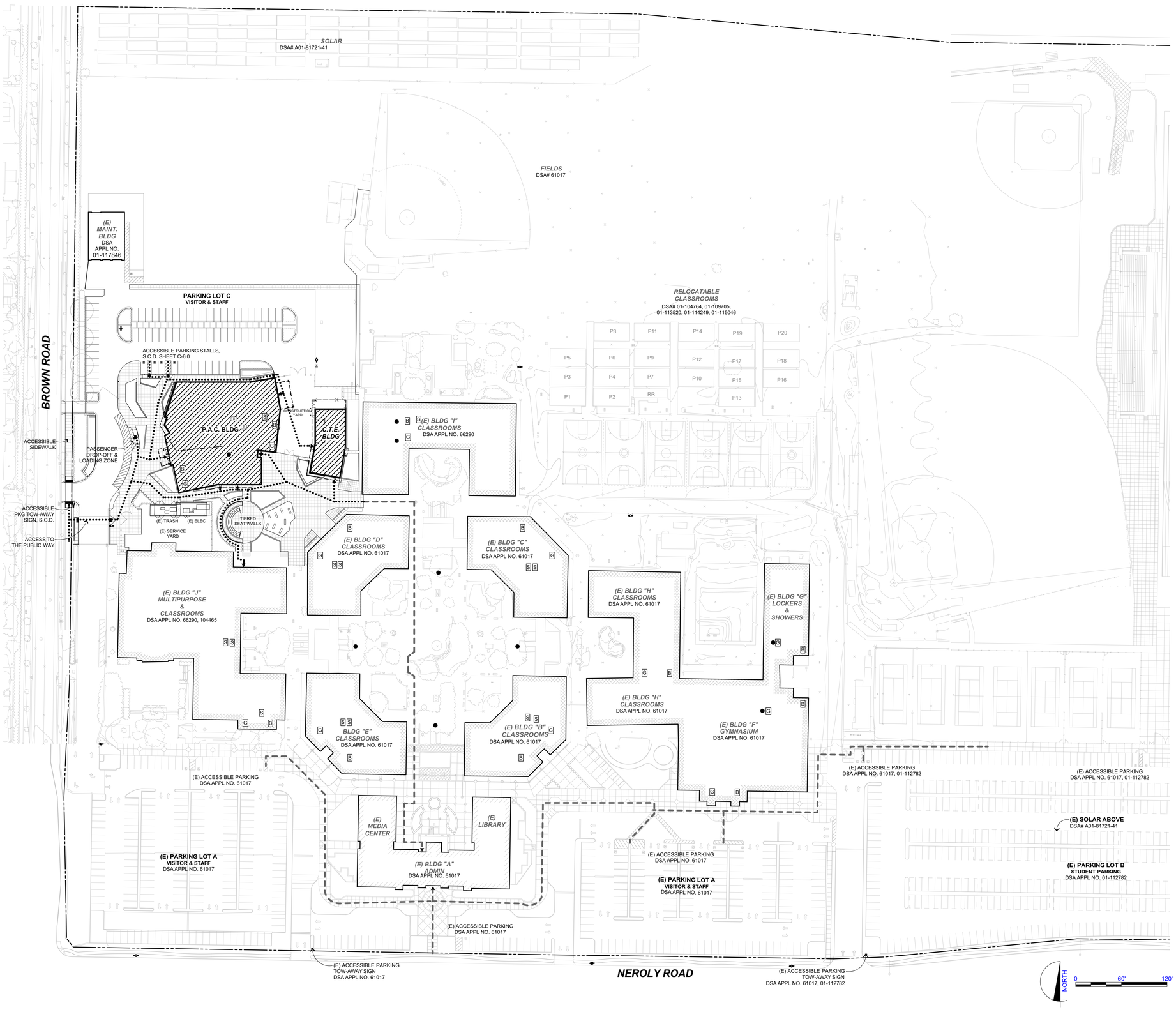

SITE ACCESS NOTES

1. SEE SHEET G-0.5 FOR CODE INFORMATION
2. REFER TO CIVIL ENGINEERING DWGS FOR SIDEWALK GRADES
3. REFER TO CIVIL ENGINEERING DRAWINGS AND LANDSCAPE PLANS FOR SITE FEATURES NOT OTHERWISE INDICATED.
4. CONCRETE SHALL SLOPE 1/8" PER FOOT AWAY FROM BUILDINGS.

DESIGN PROFESSIONAL IN GENERAL RESPONSIBLE CHARGE STATEMENT:
THE P.O.T. IDENTIFIED IN THESE CONSTRUCTION DOCUMENTS IS COMPLIANT WITH THE CURRENT APPLICABLE CALIFORNIA BUILDING CODE ACCESSIBILITY PROVISIONS FOR PATH OF TRAVEL REQUIREMENTS FOR ALTERATIONS, ADDITIONS AND STRUCTURAL REPAIRS. AS PART OF THE DESIGN OF THIS PROJECT THE P.O.T. WAS EXAMINED AND ANY ELEMENT, COMPONENTS OR PORTIONS OF THE P.O.T. THAT WERE DETERMINED TO BE NONCOMPLIANT

1) HAVE BEEN IDENTIFIED AND

2) THE CORRECTIVE WORK NECESSARY TO BRING THEM INTO COMPLIANCE HAS BEEN INCLUDED WITHIN THE SCOPE OF THIS PROJECT'S WORK THROUGH DETAILS, DRAWINGS AND SPECIFICATIONS INCORPORATED INTO THESE CONSTRUCTION DOCUMENTS.

ANY NONCOMPLIANT ELEMENT, COMPONENT, OR PORTION OF THE P.O.T. THAT WILL NOT BE CORRECTED BY THIS PROJECT BASED ON VALUATION THRESHOLD LIMITATIONS OR A FINDING OF UNREASONABLE HARDSHIP ARE SO INDICATED IN THESE CONSTRUCTION DOCUMENTS.

DURING CONSTRUCTION IF P.O.T. ITEMS WITHIN THE SCOPE OF THE PROJECT REPRESENTED AS CODE-COMPLIANT ARE FOUND TO BE NONCONFORMING BEYOND REASONABLE CONSTRUCTION TOLERANCES, THEY SHALL BE BROUGHT INTO COMPLIANCE WITH THE CBC AS A PART OF THIS PROJECT BY MEANS OF A CONSTRUCTION CHANGE DOUCMENT.

INDICATES BARRIER FREE PATH OF TRAVEL

THE BARRIER FREE PATH OF TRAVEL INDICATED HAS BEEN PROVIDED IN ACCORDANCE WITH IR 11B-10 AND SHALL COMPLY WITH THE FOLLOWING:
- 1:20 MAXIMUM SLOPE WITHOUT A RAMP
- 1:48 MAXIMUM CROSS SLOPE
- NO ABRUPT VERTICAL CHANGES EXCEEDING 1/4". CHANGES BETWEEN 1/4" TO 1/2" VERTICAL CAN BE AT 1:2 MAX SLOPE. CHANGES LESS THAN 1/4" CAN BE VERTICAL
- 48" MIN. CLEAR IN WIDTH (60" MIN PASSING SPACE)
- NON-SLIP SURFACE -HEAVY BROOM FINISH AT EXTERIOR CONCRETE PAVING WHERE SLOPED >6%, MEDIUM BROOM FINISH AT SLOPES <6%.
- MAINTAIN FREE OF OVERHANGING OBSTRUCTIONS TO 80" MIN
- PROTRUDING OBJECTS NOT GREATER THAN 4" SHALL BE MOUNTED BETWEEN 27" AND 80" A.F.F.
- WHERE A DRAIN INLET IS IN THE PATH OF TRAVEL, THE GRATE SHALL BE ORIENTED SO THAT MAX OPENING IS 1/2" & LONG DIM IS PERPENDICULAR TO THE PREDOMINANT DIRECTION OF PEDESTRIAN TRAVEL
- CONTRACTOR TO VERIFY THAT NO BELOW-GRADE PULL BOXES OCCUR WITHIN THE AREA OF TRUNCATED DOMES

PARKING AND PEDESTRIAN SITE SIGNAGE SHALL COMPLY WITH CBC SECTIONS 11B-502.6 11B-502.8 & 11B-703.7.2.1 S.C.D.

BUILDING SIGNAGE SHALL COMPLY WITH CBC 11B-703 SEE SHEET AG-2.1

PEDESTRIAN GATES SHALL COMPLY WITH CBC 1010.2 & 11B-206.5, S.L.D.

ACCESS SITE PLAN LEGEND

- NEW BUILDING
- (E) BUILDING TO REMAIN
- BARRIER FREE PATH OF TRAVEL PER GENERAL NOTES
- (E) BARRIER FREE PATH OF TRAVEL
- ACCESSIBLE ENTRY/ EXTERIOR DOOR AT P.O.T.
- ACCESSIBLE DRINKING FOUNTAIN
- G — RESTROOM - GIRLS
- B — RESTROOM - BOYS
- S — RESTROOM - STAFF
- PROPERTY LINE (APPROX)

PARKING COUNT

	OVERALL	ACC STALL	ACC VAN STALL	REQUIRED STD	REQUIRED VAN
(E) PARKING LOT A VISITOR & STAFF	333	8	3	6	2
(E) PARKING LOT B STUDENT	389	11	4	6	2
(N) PARKING LOT C VISITOR & STAFF	74	3	1	2	1

CBC 2016 TABLE 11B-208.2:
51-75 TOTAL SPACES = 3 REQ'D ACC SPACES
301-400 TOTAL SPACES = 8 REQ'D ACC SPACES

CBC 2016 SECTION 11B-208.2.4:
FOR EVERY 6 OR FRACTION OF 6 ACC PARKING SPACES REQUIRED, AT LEAST 1 SHALL BE A VAN ACCESSIBLE PARKING SPACE.

KEY PLAN

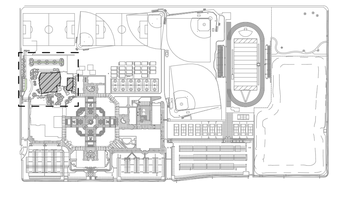

QUATTROCCHI KWOK ARCHITECTS
Main Office:
636 Fifth Street, Santa Rosa, CA 95404
Pleasanton Office:
600 Main Street, Suite E,
Pleasanton, CA 94566
(707) 576-0829

LICENSED ARCHITECT
JIM THEISS
LICENSE # C22643
EXP JUNE 30, 2021
STATE OF CALIFORNIA

SIGNED: AUGUST 13, 2019

FREEDOM HIGH SCHOOL

PERFORMING ARTS AND CTE FACILITIES

1050 NEROLY RD,
OAKLEY, CA 94561

LIBERTY UNION HIGH SCHOOL DISTRICT

ARCH PROJECT NO: 1739.00
DRAWN BY:
DRAWING SCALE: 1" = 60'-0"
PTN: 61721-0068

BID SET

AUGUST 13, 2019

SHEET TITLE

ACCESSIBILITY SITE PLAN

SHEET NUMBER

G-0.5

BIM Server: BIMCLOUD-QKA - BIMcloud/1739.00 - Freedom High School/1739.00 FREEDOM HS Performing Arts Center-8/6/2019 3:41 PM

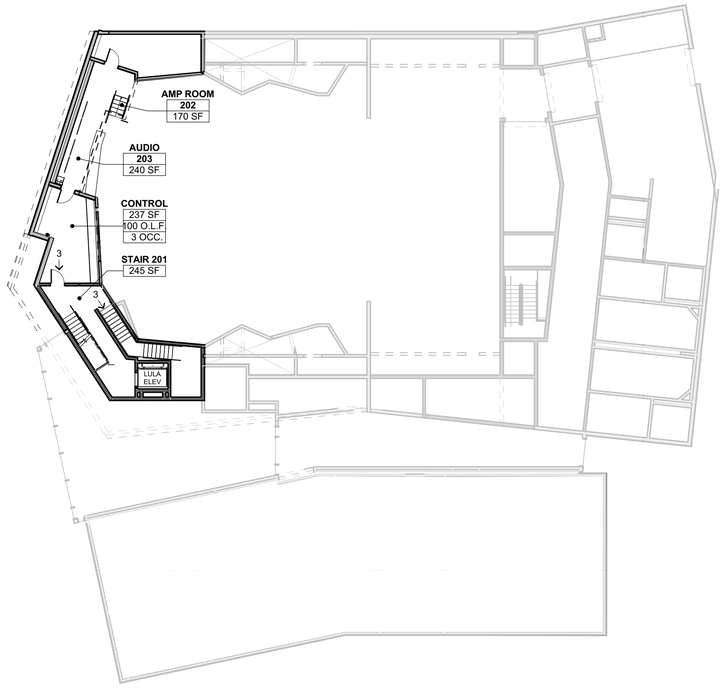

CONTROL ROOM FLOOR PLAN 2

1/16" = 1'-0"

NOTE:
THE TECH LEDGE IS AN LIMITED ACCESS SPACE AND NOT CUSTOMARILY OCCUPIED. PER CBC 11B-203.4, THE TECH LEDGE IS EXEMPT FROM ACCESSIBLE ROUTE AND REQUIREMENTS.

TECH LEDGE FLOOR PLAN 3

1/16" = 1'-0"

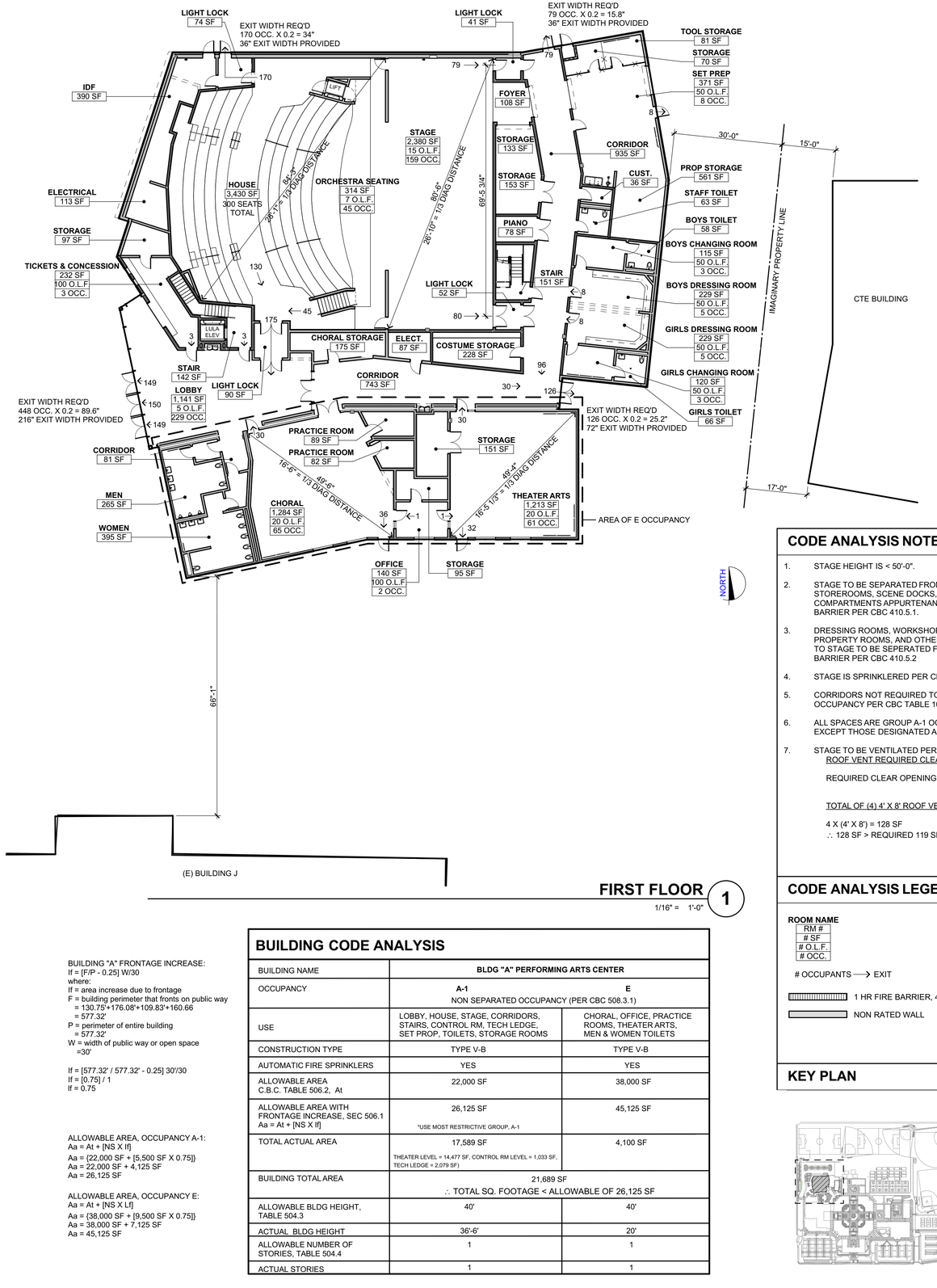

FIRST FLOOR 1

1/16" = 1'-0"

BUILDING "A" FRONTAGE INCREASE:
If = [F/P - 0.25] W/30
where:
If = area increase due to frontage
F = building perimeter that fronts on public way
= 130.75'+176.08'+109.83'+160.66
= 577.32'
P = perimeter of entire building
= 577.32'
W = width of public way or open space
=30'

If = [577.32' / 577.32' - 0.25] 30'/30
If = [0.75] / 1
If = 0.75

ALLOWABLE AREA, OCCUPANCY A-1:
Aa = At + [NS X If]
Aa = {22,000 SF + [5,500 SF X 0.75]}
Aa = 22,000 SF + 4,125 SF
Aa = 26,125 SF

ALLOWABLE AREA, OCCUPANCY E:
Aa = At + [NS X Lf]
Aa = {38,000 SF + [9,500 SF X 0.75]}
Aa = 38,000 SF + 7,125 SF
Aa = 45,125 SF

BUILDING CODE ANALYSIS

BUILDING NAME	BLDG "A" PERFORMING ARTS CENTER	
OCCUPANCY	A-1	E
	NON SEPARATED OCCUPANCY (PER CBC 508.3.1)	
USE	LOBBY, HOUSE, STAGE, CORRIDORS, STAIRS, CONTROL RM, TECH LEDGE, SET PROP, TOILETS, STORAGE ROOMS	CHORAL, OFFICE, PRACTICE ROOMS, THEATER ARTS, MEN & WOMEN TOILETS
CONSTRUCTION TYPE	TYPE V-B	TYPE V-B
AUTOMATIC FIRE SPRINKLERS	YES	YES
ALLOWABLE AREA C.B.C. TABLE 506.2, At	22,000 SF	38,000 SF
ALLOWABLE AREA WITH FRONTAGE INCREASE, SEC 506.1 Aa = At + [NS X If]	26,125 SF *USE MOST RESTRICTIVE GROUP, A-1	45,125 SF
TOTAL ACTUAL AREA	17,589 SF THEATER LEVEL = 14,477 SF, CONTROL RM LEVEL = 1,033 SF, TECH LEDGE = 2,079 SF)	4,100 SF
BUILDING TOTAL AREA	21,689 SF ∴ TOTAL SQ. FOOTAGE < ALLOWABLE OF 26,125 SF	
ALLOWABLE BLDG HEIGHT, TABLE 504.3	40'	40'
ACTUAL BLDG HEIGHT	36'-6"	20'
ALLOWABLE NUMBER OF STORIES, TABLE 504.4	1	1
ACTUAL STORIES	1	1

CODE ANALYSIS NOTES

1. STAGE HEIGHT IS < 50'-0".
2. STAGE TO BE SEPARATED FROM DRESSING ROOMS, WORKSHOPS, STOREROOMS, SCENE DOCKS, PROPERTY ROOMS, AND OTHER COMPARTMENTS APPURTENANT TO THE STAGE BY 1-HOUR FIRE BARRIER PER CBC 410.5.1.
3. DRESSING ROOMS, WORKSHOPS, STOREROOMS, SCENE DOCKS, PROPERTY ROOMS, AND OTHER COMPARTMENTS APPURTENANT TO STAGE TO BE SEPERATED FROM EACH OTHER BY 1-HOUR FIRE BARRIER PER CBC 410.5.2
4. STAGE IS SPRINKLERED PER CBC 410.7
5. CORRIDORS NOT REQUIRED TO BE RATED FOR A OR E OCCUPANCY PER CBC TABLE 1020.1.
6. ALL SPACES ARE GROUP A-1 OCCUPANCY OR ACCESSORY TO A-1 EXCEPT THOSE DESIGNATED AS GROUP E OCCUPANCY.
7. STAGE TO BE VENTILATED PER CBC 410.3.7.
   ROOF VENT REQUIRED CLEAR OPENING > 5% OF STAGE AREA
   REQUIRED CLEAR OPENING = 2,380 SF X 5%
   = 119 SF
   TOTAL OF (4) 4' X 8' ROOF VENTS PROVIDED
   4 X (4' X 8') = 128 SF
   ∴ 128 SF > REQUIRED 119 SF

CODE ANALYSIS LEGEND

ROOM NAME
RM #
SF
O.L.F.
OCC.

OCCUPANTS ⟶ EXIT

1 HR FIRE BARRIER, 45 MINUTE PROTECTED OPENING

NON RATED WALL

KEY PLAN

QUATTROCCHI KWOK ARCHITECTS
Main Office:
636 Fifth Street, Santa Rosa, CA 95404
Pleasanton Office:
600 Main Street, Suite E,
Pleasanton, CA 94566
(707) 576-0829

LICENSED ARCHITECT
JIM THEISS
LICENSE # C22643
EXP JUNE 30, 2021
STATE OF CALIFORNIA

SIGNED: AUGUST 13, 2019

FREEDOM HIGH SCHOOL

PERFORMING ARTS AND CTE FACILITIES

1050 NEROLY RD,
OAKLEY, CA 94561

LIBERTY UNION HIGH SCHOOL DISTRICT

ARCH PROJECT NO:		1739.00
DRAWN BY:		
DRAWING SCALE:		1/16" = 1'-0"
PTN:		61721-0068

BID SET

AUGUST 13, 2019

SHEET TITLE

BLDG A CODE ANALYSIS PLAN

SHEET NUMBER

G-0.6

BIM Server: BIMCLOUD-QKA - BIMcloud/1739.00 - Freedom High School/1739.00 FREEDOM HS Performing Arts Center-8/6/2019 3:45 PM

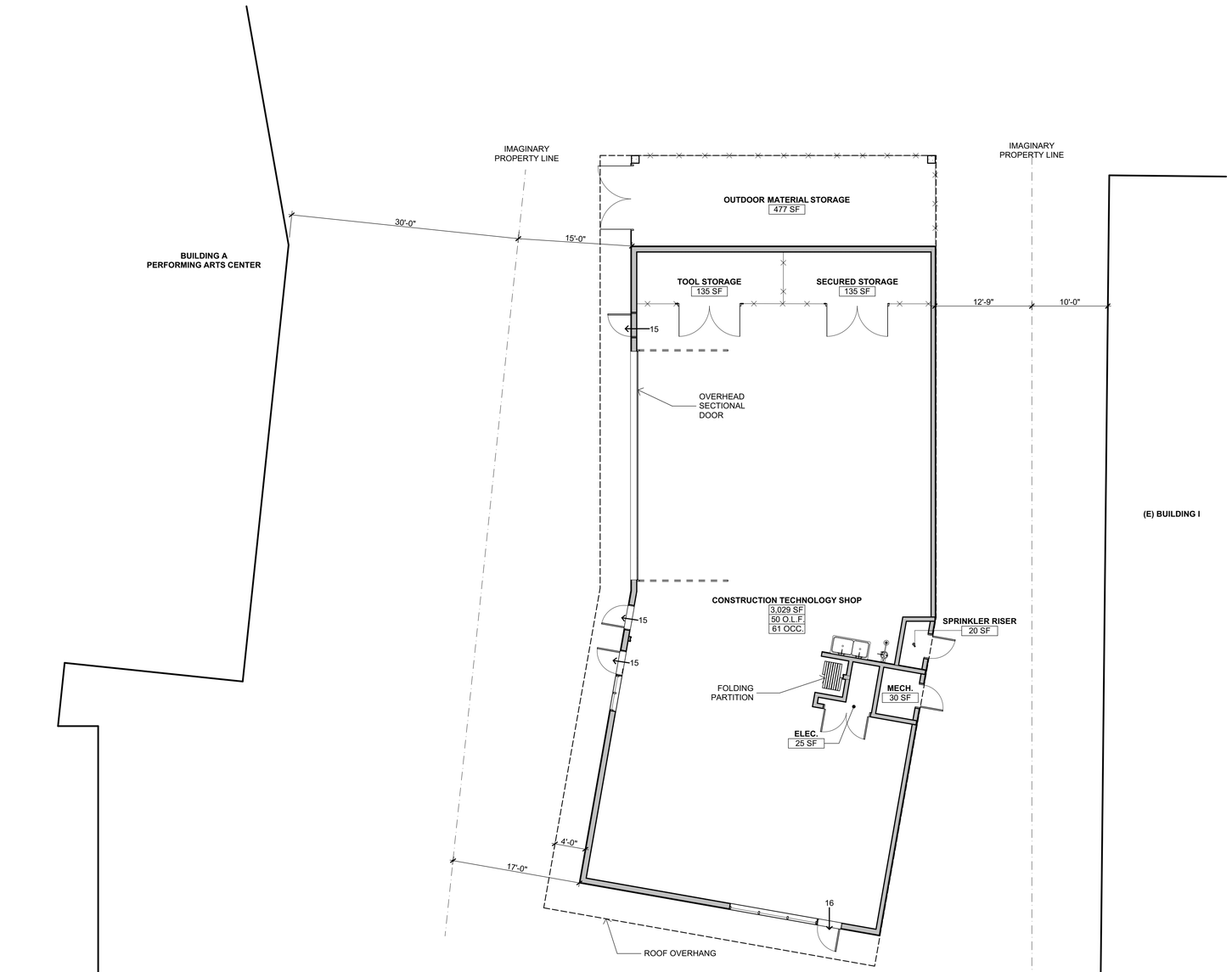

BUILDING CODE ANALYSIS

BUILDING NAME	**BLDG "B" CTE SHOP**
OCCUPANCY	**E**
USE	CONSTRUCTION TECHNOLOGY SHOP, STORAGE
CONSTRUCTION TYPE	TYPE V-B
AUTOMATIC FIRE SPRINKLERS	YES
ALLOWABLE AREA C.B.C. TABLE 506.2, At	38,000 SF
FRONTAGE INCREASE, At x If	0 SF
ACTUAL TOTAL AREA	3,963 SF
ALLOWABLE BLDG HEIGHT, TABLE 504.3	60'
ACTUAL BLDG HEIGHT	27'
ALLOWABLE NUMBER OF STORIES, TABLE 504.4	2
ACTUAL STORIES	1

CODE ANALYSIS LEGEND

ROOM NAME
RM #
SF
O.L.F.
OCC.

OCCUPANTS ⟶ EXIT

NON RATED WALL

KEY PLAN

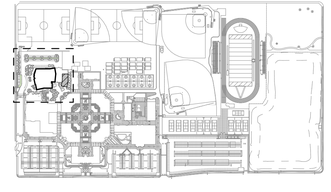

NORTH

QUATTROCCHI KWOK
ARCHITECTS
Main Office:
636 Fifth Street, Santa Rosa, CA 95404
Pleasanton Office:
600 Main Street, Suite E,
Pleasanton, CA 94566
(707) 576-0829

LICENSED ARCHITECT
JIM THEISS
LICENSE # C22643
EXP JUNE 30, 2021
STATE OF CALIFORNIA

SIGNED: JUNE 28, 2019

FREEDOM HIGH SCHOOL

PERFORMING ARTS AND CTE FACILITIES

1050 NEROLY RD
OAKLEY, CA 94561

LIBERTY UNION HIGH SCHOOL DISTRICT

ARCH PROJECT NO: 1739.00
DRAWN BY:
DRAWING SCALE:
PTN: 61721-0068

BID SET

AUGUST 13, 2019

SHEET TITLE

BUILDING B CODE ANALYSIS PLAN

SHEET NUMBER

G-0.7

BIM Server: BIMCLOUD-QKA - BIMcloud/1739.00 - Freedom High School/1739.00 FREEDOM HS Construction Technology Building 8013;8/6/2019;3:08 PM

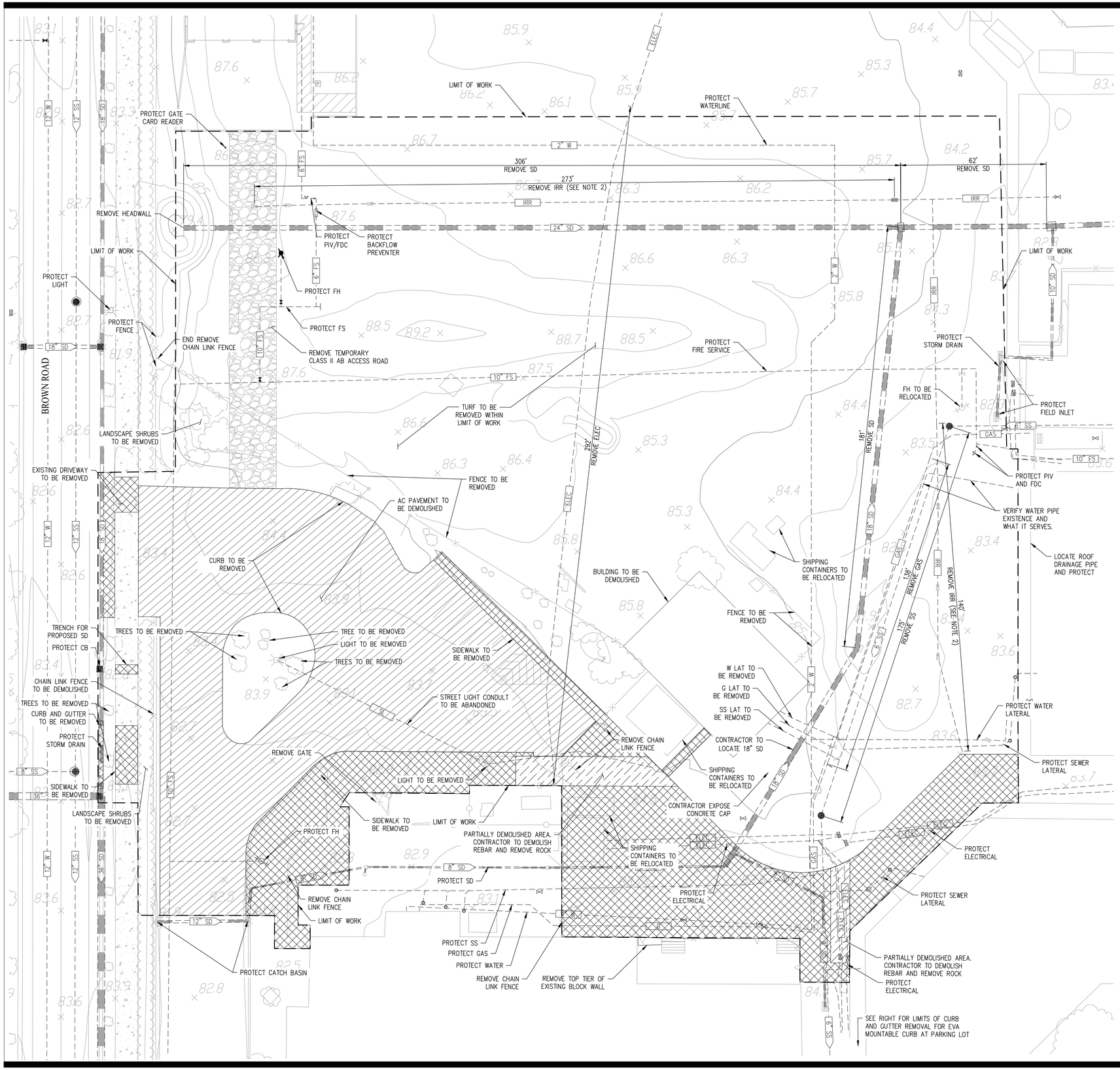

LEGEND

- LIMIT OF WORK
- REMOVE CONCRETE
- REMOVE REBAR AND ROCK
- REMOVE AC
- 6" SS — EXISTING SANITARY SEWER
- 18" SD — EXISTING STORM DRAIN
- 12" W — EXISTING WATER
- 6" IRR — EXISTING IRRIGATION LINE
- COMM — EXISTING COMMUNICATION LINE
- ELEC — EXISTING ELECTRICAL LINE
- EXISTING INLET
- EXISTING MANHOLE

NOTES:
1. SAWCUT CONCRETE ON NEAREST SCORE LINE.
2. PRIOR TO DEMOLITION OF IRRIGATION LINES, PROVIDE AND INSTALL IRRIGATION TO SUPPORT EXISTING TURF AND LANDSCAPING TO REMAIN. SEE LANDSCAPE DRAWINGS (IRRIGATION PLAN).

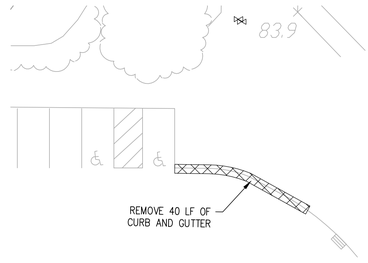

CURB AND GUTTER REMOVAL AT (E) PARKING LOT A

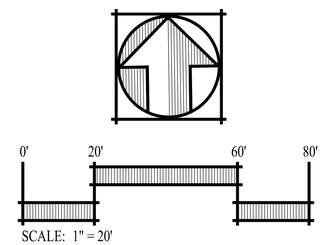

SCALE: 1" = 20'

QUATTROCCHI KWOK ARCHITECTS
Main Office:
636 Fifth Street, Santa Rosa, CA 95404
Pleasanton Office:
600 Main Street, Suite E.
Pleasanton, CA 94566
(707) 576-0829

SAN RAMON • (925) 866-0322
SACRAMENTO • (916) 375-1877
WWW.CBG.COM
CIVIL ENGINEERS • SURVEYORS • PLANNERS

REGISTERED PROFESSIONAL ENGINEER
JASON D. VOGAN
59299
CIVIL
STATE OF CALIFORNIA

FREEDOM HIGH SCHOOL

PERFORMING ARTS AND CTE FACILITIES

1050 NEROLY RD
OAKLEY, CA 94561

LIBERTY UNION HIGH SCHOOL DISTRICT

ARCH PROJECT NO:	1739.00
DRAWN BY:	MJV
DRAWING SCALE:	AS NOTED
PTN:	61721-0068

BID SET

AUGUST 13, 2019

SHEET TITLE

EXISTING CONDITIONS/ DEMOLITION

SHEET NUMBER

C-1.0

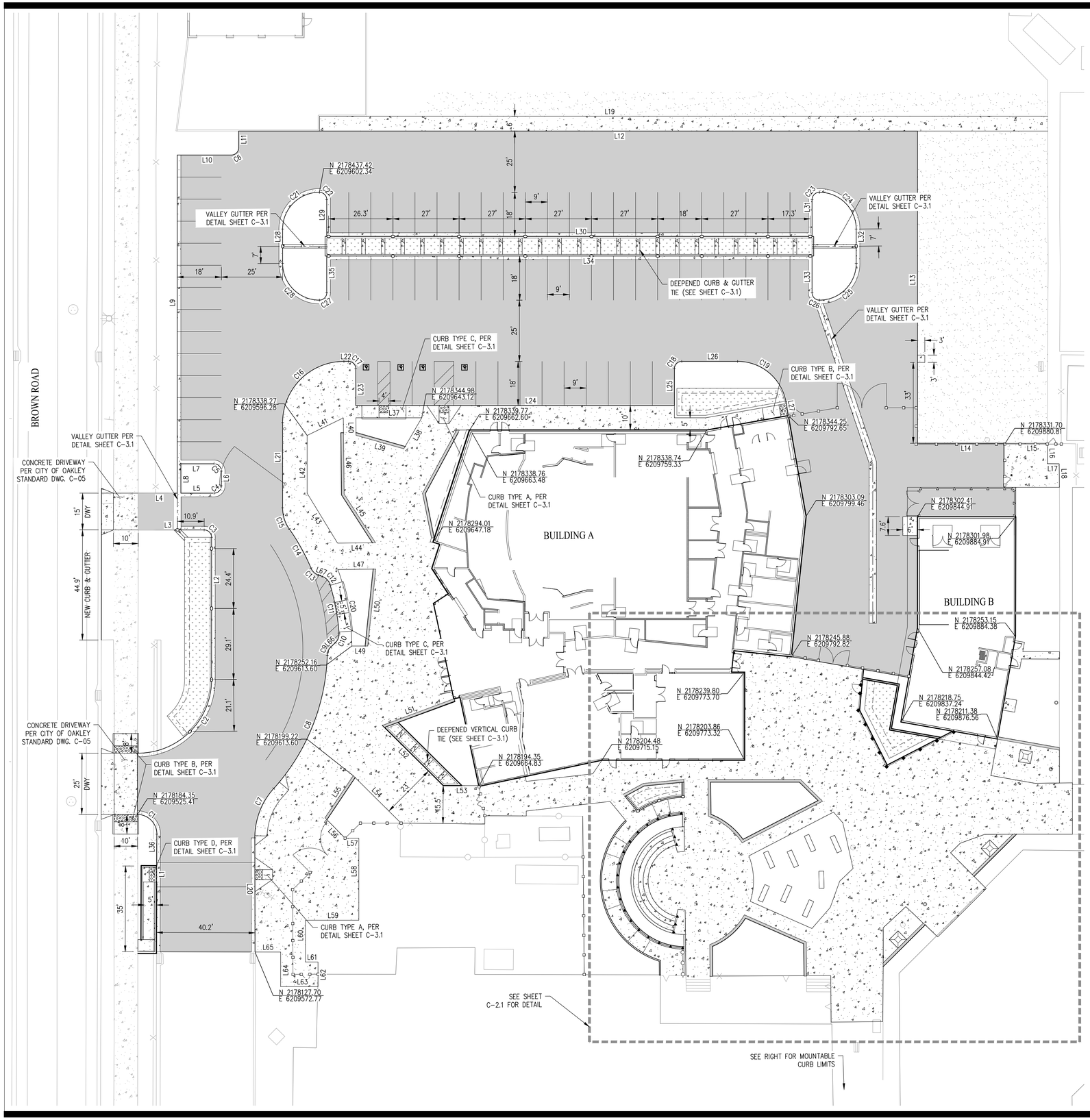

LEGEND

- AC PAVEMENT (SEE SHEET C-3.0 FOR SECTION)
- CONCRETE SIDEWALK/GUTTER/PAVEMENT
- VALLEY GUTTER (SEE SHEET C-3.0 FOR DETAIL)
- CURB AND GUTTER
- CURB CUT (SEE SHEET C-2.1 FOR DETAIL)

LINE TABLE		
NO	LENGTH	BEARING
L1	48.05	N00° 47' 13.83"E
L2	58.10	N00° 36' 46.03"E
L3	26.93	N89° 23' 13.97"W
L4	15.91	N89° 23' 13.97"W
L5	13.50	N89° 23' 13.97"W
L6	6.00	S00° 36' 46.03"W
L7	13.50	N89° 23' 13.97"W
L8	12.00	N00° 36' 46.03"E
L9	138.00	N00° 36' 46.03"E
L10	22.08	N89° 23' 13.97"W
L11	6.77	N00° 36' 46.03"E
L12	276.92	S89° 23' 13.97"E
L13	127.41	N00° 36' 46.03"E
L14	40.00	N89° 23' 13.97"W
L15	12.95	S89° 23' 13.97"E
L16	8.30	S00° 14' 15.12"W
L17	4.80	S89° 01' 15.18"E
L18	9.49	S00° 00' 54.20"E
L19	297.15	S89° 23' 13.97"E
L20	46.59	N00° 30' 36.75"E
L21	34.77	N00° 36' 46.03"E
L22	1.84	S89° 23' 13.97"E
L23	15.00	N00° 36' 46.03"E
L24	130.00	S89° 23' 13.97"E
L25	15.00	N00° 36' 46.03"E
L26	22.77	S89° 23' 13.97"E
L27	5.70	S09° 23' 13.97"E
L28	14.00	N00° 36' 46.03"E
L29	15.00	N00° 36' 46.03"E
L30	198.00	S89° 23' 13.97"E
L31	15.00	N00° 36' 46.03"E
L32	14.00	N00° 36' 46.03"E
L33	15.00	N00° 36' 46.03"E
L34	216.00	S89° 23' 13.97"E

LINE TABLE		
NO	LENGTH	BEARING
L35	15.00	N00° 36' 46.03"E
L36	13.04	N00° 47' 13.83"E
L37	26.87	N89° 23' 13.94"W
L38	14.63	N30° 39' 41.92"E
L39	20.23	S73° 36' 31.59"E
L40	7.16	S00° 00' 00.00"E
L41	16.41	S64° 44' 30.47"W
L42	23.58	S00° 36' 46.03"W
L43	23.85	S30° 46' 55.14"E
L44	15.49	N90° 00' 00.00"E
L45	23.62	N32° 13' 23.41"W
L46	31.08	N00° 00' 00.00"E
L47	15.49	N90° 00' 00.00"E
L49	6.51	N89° 23' 13.97"W
L50	31.55	S06° 33' 58.90"W
L51	26.57	S70° 29' 39.36"W
L52	34.89	S44° 38' 16.25"E
L53	14.49	S89° 22' 39.38"E
L54	27.51	S44° 38' 16.25"E
L55	20.67	N34° 26' 15.69"E
L56	11.69	N43° 50' 27.55"W
L57	5.61	N89° 23' 13.97"W
L58	33.47	N00° 36' 46.03"E
L59	21.83	S89° 23' 13.97"E
L60	17.03	N00° 36' 46.03"E
L61	5.18	N89° 23' 13.97"W
L62	10.07	N00° 36' 46.03"E
L63	15.26	S89° 23' 13.97"E
L64	14.12	S00° 41' 58.34"W
L65	10.46	S89° 18' 01.66"E
L66	2.56	N46° 08' 55.01"E
L67	1.84	S69° 27' 57.75"E

CURVE TABLE			
NO	RADIUS	DELTA	LENGTH
C1	8.00'	090°10'28"	12.59'
C2	30.00'	090°00'00"	47.12'
C3	3.00'	090°00'00"	4.71'
C4	3.00'	090°00'00"	4.71'
C5	3.00'	090°00'00"	4.71'
C6	3.00'	090°00'00"	4.71'
C7	30.00'	042°08'23"	22.06'
C8	85.00'	040°16'24"	59.75'
C9	5.00'	043°46'19"	3.82'
C10	5.00'	049°41'23"	4.34'
C11	90.00'	012°52'55"	20.24'
C12	5.00'	053°02'35"	4.63'
C13	5.00'	047°14'25"	4.12'
C14	85.00'	012°19'49"	18.29'
C15	15.00'	035°10'08"	9.21'
C16	25.00'	090°00'00"	39.27'
C17	3.00'	090°00'00"	4.71'
C18	3.00'	090°00'00"	4.71'
C19	20.00'	080°00'00"	27.93'
C20	95.00'	019°13'44"	31.88'
C21	15.00'	090°00'00"	23.56'
C22	3.00'	090°00'00"	4.71'
C23	3.00'	090°00'00"	4.71'
C24	15.00'	090°00'00"	23.56'
C25	15.00'	090°00'00"	23.56'
C26	3.00'	090°00'00"	4.71'
C27	3.00'	090°00'00"	4.71'
C28	15.00'	090°00'00"	23.56'

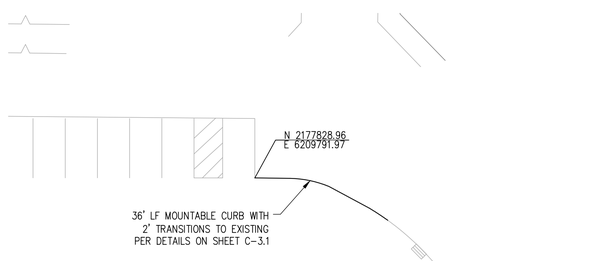

MOUNTABLE CURB LIMITS FOR EVA AT (E) PARKING LOT A

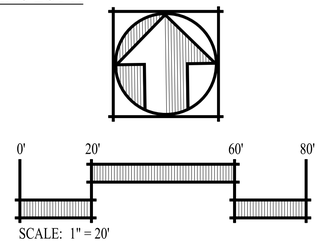

QUATTROCCHI KWOK ARCHITECTS
Main Office:
636 Fifth Street, Santa Rosa, CA 95404
Pleasanton Office:
600 Main Street, Suite E.
Pleasanton, CA 94566
(707) 576-0829

SAN RAMON • (925) 866-0322
SACRAMENTO • (916) 375-1877
WWW.CBG.COM
CIVIL ENGINEERS • SURVEYORS • PLANNERS

REGISTERED PROFESSIONAL ENGINEER
JASON D. VOGAN
59299
CIVIL
STATE OF CALIFORNIA

FREEDOM HIGH SCHOOL

PERFORMING ARTS AND CTE FACILITIES

1050 NEROLY RD
OAKLEY, CA 94561

LIBERTY UNION HIGH SCHOOL DISTRICT

ARCH PROJECT NO:	1739.00
DRAWN BY:	MJV
DRAWING SCALE:	AS NOTED
PTN:	61721-0068

BID SET

AUGUST 13, 2019

SHEET TITLE

HORIZONTAL CONTROL PLAN

SHEET NUMBER

C-2.0

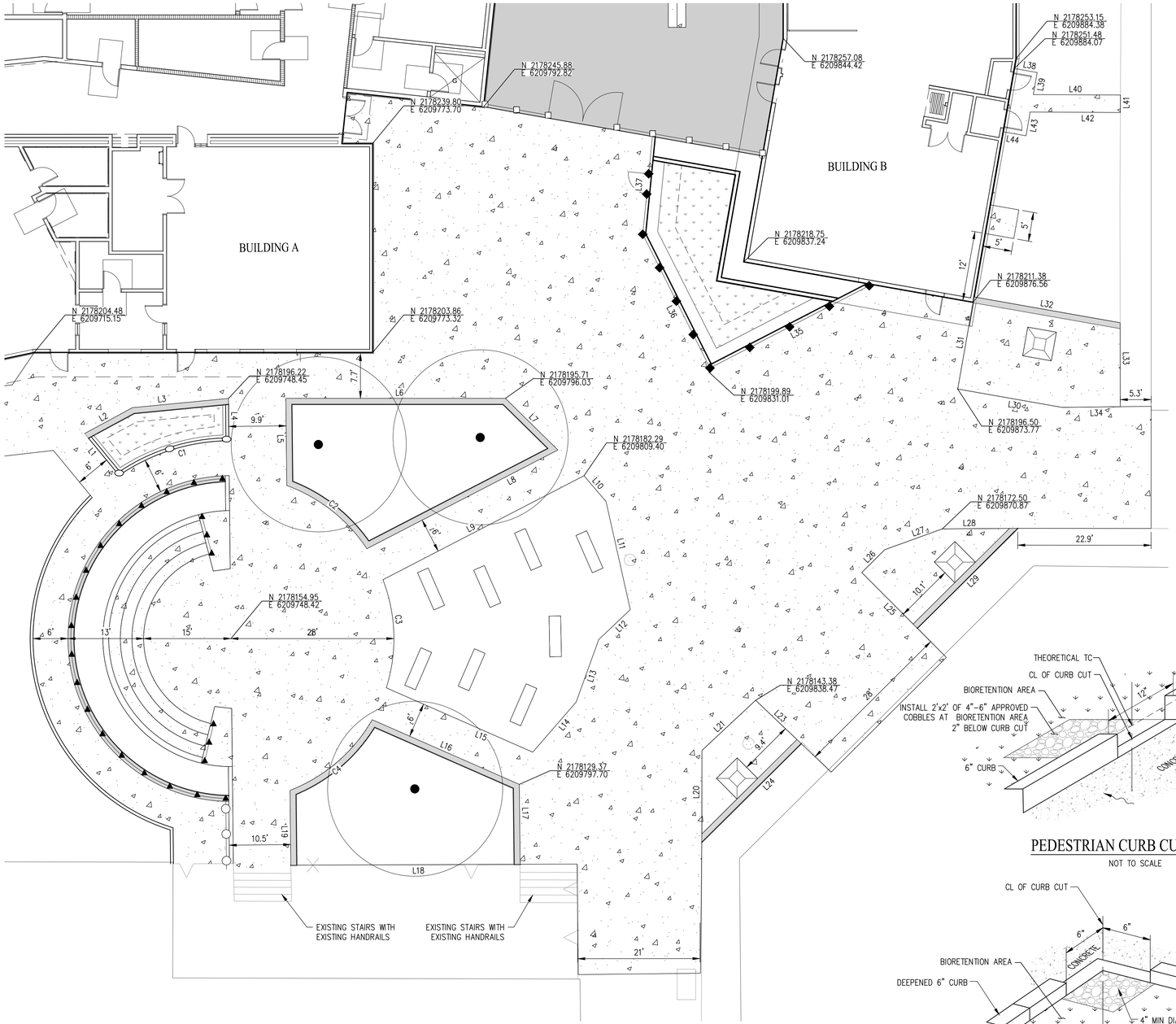

LEGEND

- AC PAVEMENT (SEE SHEET C-3.0 FOR SECTION)
- CONCRETE SIDEWALK/GUTTER/PAVEMENT
- VALLEY GUTTER (SEE SHEET C-3.1 FOR DETAIL)
- CURB AND GUTTER
- CURB CUT (SEE DETAIL BELOW)

LINE TABLE		
NO	LENGTH	BEARING
L1	9.31	N38° 51' 02.66"W
L2	9.34	N62° 12' 44.30"E
L3	16.57	N85° 06' 52.01"E
L4	7.28	S00° 10' 38.41"W
L5	14.97	N00° 00' 00.00"W
L6	37.72	S89° 23' 13.97"E
L7	12.64	S44° 52' 31.93"E
L8	36.95	S63° 16' 35.58"W
L9	38.91	N63° 16' 35.58"E
L10	5.83	S39° 49' 49.17"E
L11	19.03	S12° 02' 18.83"E
L12	7.48	S47° 05' 02.54"W
L13	11.45	S20° 30' 26.06"W
L14	11.37	S41° 34' 22.75"W
L15	27.49	N65° 39' 44.65"W
L16	27.60	S65° 39' 44.65"E
L17	13.73	S00° 01' 00.20"E
L18	39.40	N89° 36' 18.54"W
L19	12.84	N00° 00' 54.67"E
L20	15.79	S00° 44' 25.90"W
L21	12.61	S47° 35' 32.03"W
L23	10.79	N45° 48' 27.77"W

LINE TABLE		
NO	LENGTH	BEARING
L24	24.06	N45° 48' 44.35"E
L25	13.50	N44° 15' 25.85"W
L26	5.55	N45° 44' 34.15"E
L27	10.53	N70° 44' 21.88"E
L28	12.95	S89° 47' 25.00"E
L29	24.34	S45° 47' 58.01"W
L30	18.20	S79° 23' 13.94"E
L31	15.13	S10° 36' 46.06"W
L32	25.50	N79° 22' 43.49"W
L33	14.43	N00° 31' 27.87"E
L34	10.00	N89° 56' 02.14"E
L35	32.45	S63° 16' 35.58"W
L36	26.37	N26° 05' 10.74"W
L37	17.07	N06° 13' 36.88"E
L38	4.00	S79° 23' 13.99"E
L39	3.85	S10° 36' 46.07"W
L40	14.98	S89° 06' 00.56"E
L41	3.00	S00° 53' 59.44"W
L42	15.49	N89° 06' 00.56"W
L43	4.15	S10° 36' 46.07"W
L44	4.00	N79° 23' 13.93"W

CURVE TABLE			
NO	RADIUS	DELTA	LENGTH
C1	34.00'	033°47'19"	20.05'
C2	28.00'	036°27'34"	17.82'
C3	28.00'	038°45'35"	18.94'
C4	28.00'	038°50'56"	18.99'

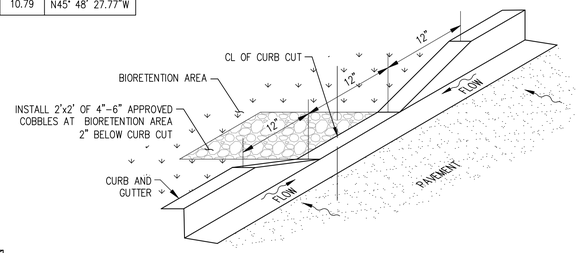

VEHICULAR CURB CUT DETAIL

NOT TO SCALE

PEDESTRIAN CURB CUT DETAIL

NOT TO SCALE

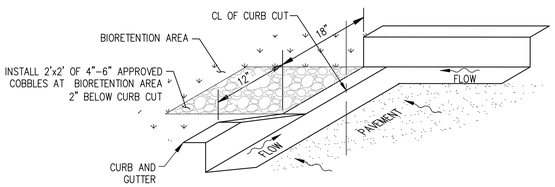

VEHICULAR CORNER CURB CUT DETAIL

NOT TO SCALE

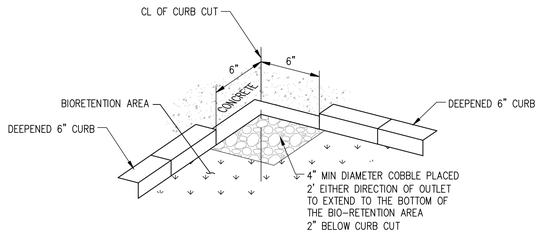

PEDESTRIAN CORNER CURB CUT DETAIL

NOT TO SCALE

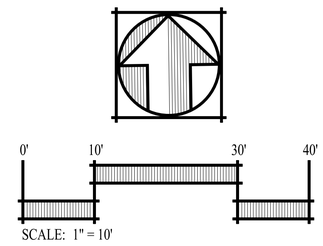

SCALE: 1" = 10'

QUATTROCCHI KWOK ARCHITECTS
Main Office:
636 Fifth Street, Santa Rosa, CA 95404
Pleasanton Office:
600 Main Street, Suite E.
Pleasanton, CA 94566
(707) 576-0829

SAN RAMON • (925) 866-0322
SACRAMENTO • (916) 375-1877
WWW.CBG.COM
CIVIL ENGINEERS • SURVEYORS • PLANNERS

REGISTERED PROFESSIONAL ENGINEER
JASON D. VOGAN
59299
CIVIL
STATE OF CALIFORNIA

FREEDOM HIGH SCHOOL

PERFORMING ARTS AND CTE FACILITIES

1050 NEROLY RD
OAKLEY, CA 94561

LIBERTY UNION HIGH SCHOOL DISTRICT

ARCH PROJECT NO:	1739.00
DRAWN BY:	MJV
DRAWING SCALE:	AS NOTED
PTN:	61721-0068

BID SET

AUGUST 13, 2019

SHEET TITLE

HORIZONTAL CONTROL PLAN

SHEET NUMBER

C-2.1

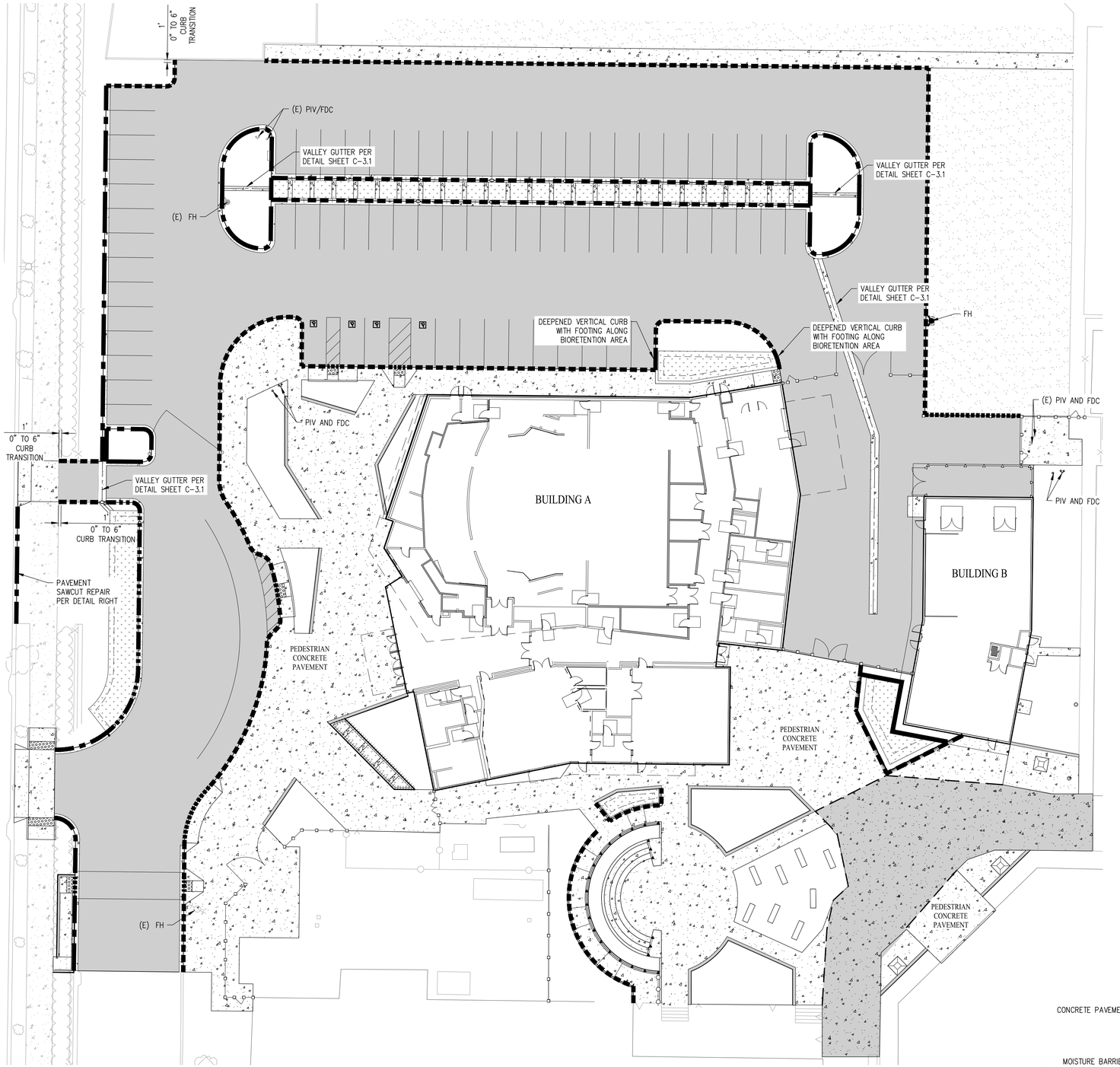

LEGEND

- 6" VERTICAL CURB AND GUTTER (SEE DETAIL SHEET C-3.1)
- 6" VERTICAL CURB (SEE DETAIL SHEET C-3.1)
- DEEPENED 6" CURB AND GUTTER (SEE DETAIL SHEET C-3.1)
- DEEPENED 6" CURB AND GUTTER WITH FOOTING (SEE DETAIL SHEET C-3.1)
- DEEPENED VERTICAL CURB WITH FOOTING (SEE DETAIL SHEET C-3.1)
- DEEPENED VERTICAL CURB WITH TIE (SEE DETAIL SHEET C-3.1)
- FLUSH CURB (SEE DETAIL SHEET C-3.1)
- DEEPENED FLUSH CURB WITH FOOTING (SEE DETAIL SHEET C-3.1)
- TI 5 PAVEMENT SECTION (2.5" AC / 10.0" AB)
- PEDESTRIAN CONCRETE PAVEMENT (SEE DETAIL BELOW)
- VEHICULAR CONCRETE PAVEMENT (SEE DETAIL BELOW)

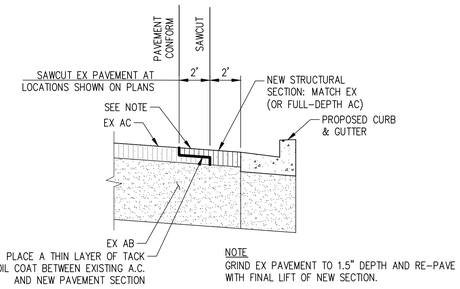

PAVEMENT SAWCUT REPAIR DETAIL

NOT TO SCALE

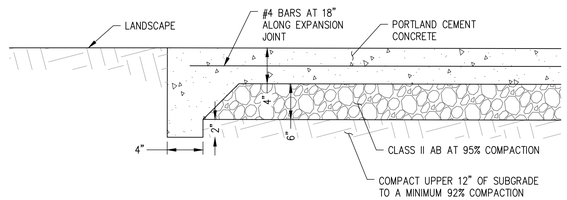

PEDESTRIAN CONCRETE PAVEMENT SECTION

NOT TO SCALE

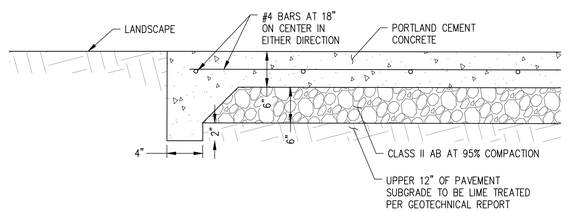

VEHICULAR CONCRETE PAVEMENT SECTION

NOT TO SCALE

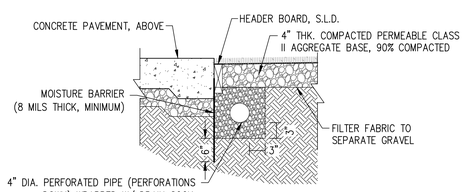

SYNTHETIC TURF

NOT TO SCALE

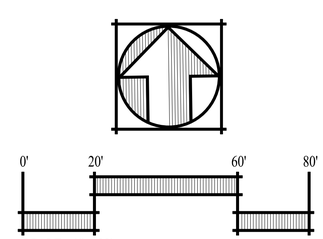

SCALE: 1" = 20'

QUATTROCCHI KWOK ARCHITECTS
Main Office:
636 Fifth Street, Santa Rosa, CA 95404
Pleasanton Office:
600 Main Street, Suite E.
Pleasanton, CA 94566
(707) 576-0829

SAN RAMON • (925) 866-0322
SACRAMENTO • (916) 375-1877
WWW.CBG.COM
SURVEYORS • PLANNERS
CIVIL ENGINEERS

REGISTERED PROFESSIONAL ENGINEER
JASON D. VOGAN
59299
CIVIL
STATE OF CALIFORNIA

FREEDOM HIGH SCHOOL

PERFORMING ARTS AND CTE FACILITIES

1050 NEROLY RD
OAKLEY, CA 94561

LIBERTY UNION HIGH SCHOOL DISTRICT

ARCH PROJECT NO:	1739.00
DRAWN BY:	MJV
DRAWING SCALE:	AS NOTED
PTN:	61721-0068

BID SET

AUGUST 13, 2019

SHEET TITLE

PAVEMENT/ CURB TYPE PLAN

SHEET NUMBER

C-3.0

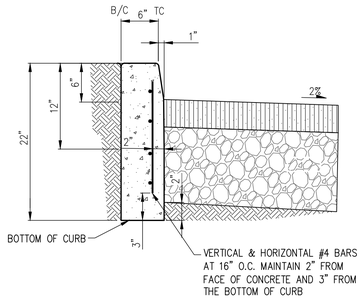

6" VERTICAL CURB DETAIL

NOT TO SCALE

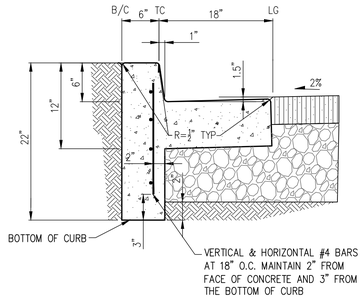

6" VERTICAL CURB AND GUTTER DETAIL

NOT TO SCALE

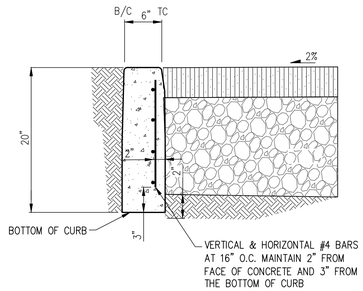

FLUSH CURB DETAIL

NOT TO SCALE

NOTE

1. EITHER SIDE OF DEEPENED CURBS SHALL BE FILLED SIMULTANEOUSLY TO AVOID TIPPING.

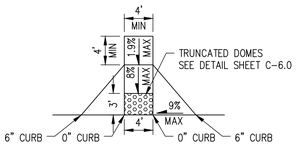

TYPE A RAMP

NOT TO SCALE

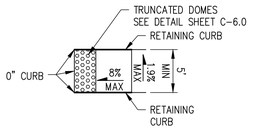

TYPE B RAMP

NOT TO SCALE

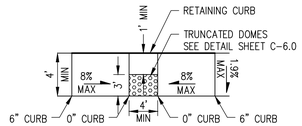

TYPE C RAMP

NOT TO SCALE

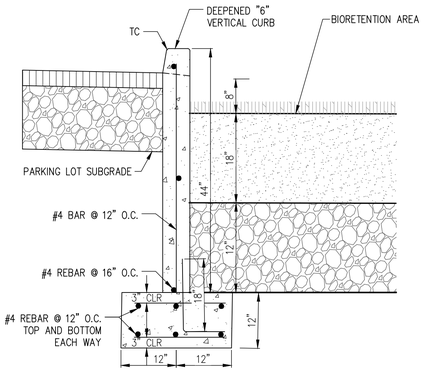

6" DEEPENED VERTICAL CURB WITH FOOTING

NOT TO SCALE

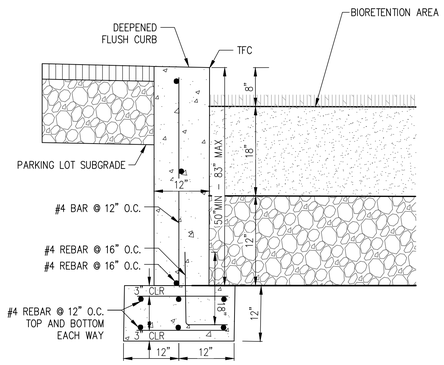

DEEPENED FLUSH CURB WITH FOOTING

NOT TO SCALE

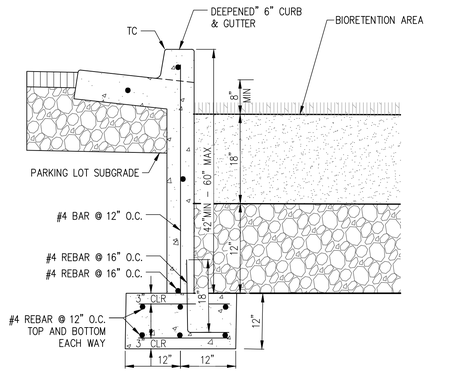

6" DEEPENED CURB & GUTTER WITH FOOTING

NOT TO SCALE

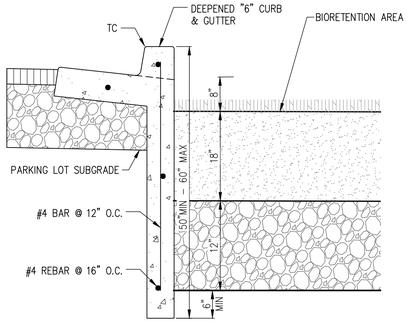

6" DEEPENED CURB & GUTTER

NOT TO SCALE

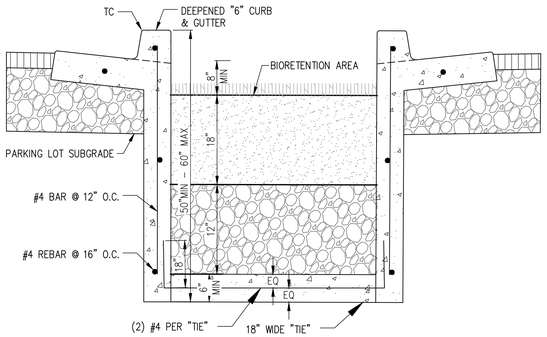

6" DEEPENED CURB & GUTTER WITH TIE

NOT TO SCALE

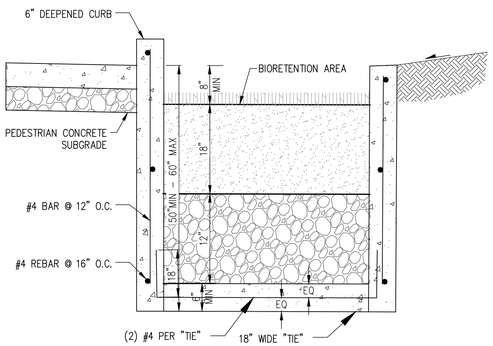

DEEPENED VERTICAL CURB WITH TIE

NOT TO SCALE

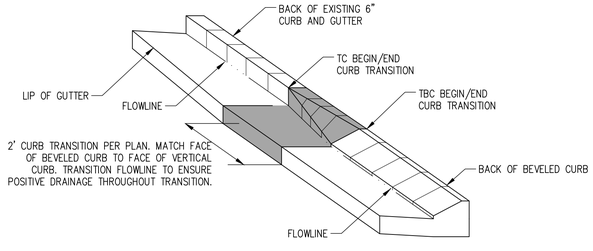

6" CURB W/ CATCH GUTTER TO BEVELED CURB W/ CATCH GUTTER TRANSITION DETAIL

NOT TO SCALE

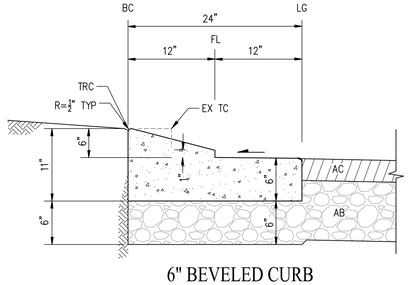

6" BEVELED CURB AND GUTTER DETAIL

NOT TO SCALE

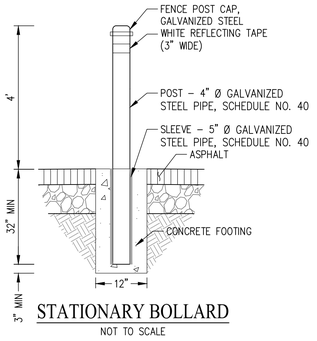

STATIONARY BOLLARD

NOT TO SCALE

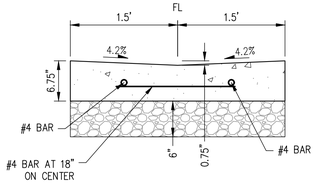

VALLEY GUTTER DETAIL

NOT TO SCALE

QUATTROCCHI KWOK
ARCHITECTS
Main Office:
636 Fifth Street, Santa Rosa, CA 95404
Pleasanton Office:
600 Main Street, Suite E.
Pleasanton, CA 94566
(707) 576-0829

SAN RAMON • (925) 866-0322
SACRAMENTO • (916) 375-1877
WWW.CBG.COM
CIVIL ENGINEERS • SURVEYORS • PLANNERS

REGISTERED PROFESSIONAL ENGINEER
JASON D. VOGAN
59299
CIVIL
STATE OF CALIFORNIA

FREEDOM HIGH SCHOOL

PERFORMING ARTS AND CTE FACILITIES

1050 NEROLY RD
OAKLEY, CA 94561

LIBERTY UNION HIGH SCHOOL DISTRICT

ARCH PROJECT NO:	1739.00
DRAWN BY:	MJV
DRAWING SCALE:	AS NOTED
PTN:	61721-0068

BID SET

AUGUST 13, 2019

SHEET TITLE

CURB RAMP/ CURB TYPE DETAILS

SHEET NUMBER

C-3.1

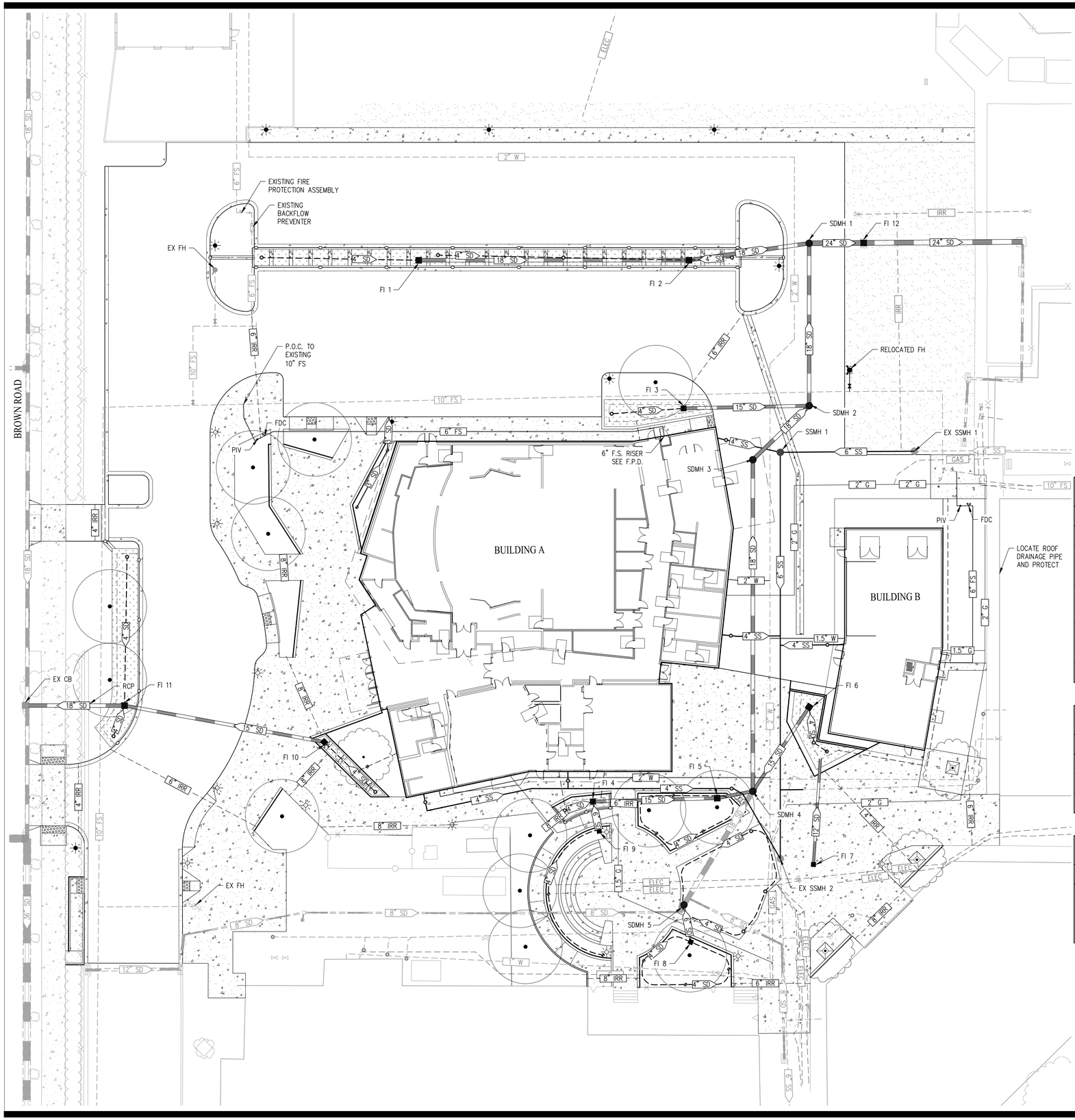

LEGEND

- AC PAVEMENT
- CONCRETE SIDEWALK/GUTTER
- BIO-RETENTION AREA
- 15" SD — PROPOSED STORM DRAIN
- 4" SD — PROPOSED PERFORATED STORM DRAIN
- 4" SS — PROPOSED SEWER LATERAL
- 2" W — PROPOSED WATER LATERAL
- 4" FS — PROPOSED FIRE SERVICE
- IRR — IRRIGATION SLEEVE – SEE LANDSCAPE PLANS
- RAIN WATER LEADER – SEE PLUMBING PLANS
- PIV
- FDC
- PROPOSED MANHOLE
- PROPOSED CATCH BASIN
- AREA DRAIN
- PROPOSED SD OR SS CLEANOUT
- PROPOSED CURB CUT
- PROPOSED STREET LIGHT, SEE ELECTRICAL PLANS
- PROPOSED PENDANT LUMINAIRE, SEE ELECTRICAL PLANS
- 8" SS — EXISTING SEWER
- 18" SD — EXISTING STORM DRAIN
- 12" W — EXISTING WATER
- 6" IRR — EXISTING IRRIGATION
- EXISTING FIELD INLET
- EXISTING MANHOLE

STORM DRAIN PIPE SCHEDULE

STRUCTURE	DESCRIPTION
4" PERFORATED PIPE	665 LF PVC
3" PIPE	40 LF PVC
6" PIPE	30 LF PVC
12" PIPE	45 LF PVC
15" PIPE	241 LF HDPE
18" PIPE	390 LF HDPE
18" PIPE	393 LF RCP
24" PIPE	130 LF HDPE

STORM DRAIN STRUCTURE SCHEDULE

STRUCTURE	DESCRIPTION
AREA DRAIN (11 TOTAL)	NDS 4"ATRIUM GRATE #75
FIELD INLET 8, 9 (2 TOTAL)	OLDCASTLE PRECAST 1212CB
FIELD INLET 3,4,5,7,10 (5 TOTAL)	OLDCASTLE PRECAST CB-1818
FIELD INLET 1,2,6,11 (4 TOTAL)	OLDCASTLE PRECAST DI-2424
FIELD INLET 12 (1 TOTAL)	OLDCASTLE PRECAST DI-3030
MANHOLE (5 TOTAL)	CITY OF OAKLEY STANDARD SD-06, SD-07

SANITARY SEWER PIPE SCHEDULE

STRUCTURE	DESCRIPTION
2" PIPE	7 LF, PVC SDR 35
4" PIPE	243 LF, PVC SDR 35
6" PIPE	220 LF, PVC SDR 35

SANITARY SEWER STRUCTURE SCHEDULE

STRUCTURE	DESCRIPTION
SSCO (5 TOTAL)	DWG-26 PER CENTRAL CONTRA COSTA SANITARY DISTRICT
MANHOLE (1 TOTAL)	STANDARD MAIN MANHOLE, DWG-1 PER CENTRAL CONTRA COSTA SANITARY DISTRICT

WATER PIPE SCHEDULE

STRUCTURE	DESCRIPTION
1.5" PIPE	30 LF PE
2" PIPE	155 LF PE
6" PIPE	285 LF PVC

WATER STRUCTURE SCHEDULE

STRUCTURE	DESCRIPTION
PIV (2 TOTAL)	MUELLER A-20801
FIRE DEPT. CONNECTION (2 TOTAL)	CROKER 6545 4-WAY FDC

0' 20' 60' 80'

SCALE: 1" = 20'

QUATTROCCHI KWOK ARCHITECTS
Main Office:
636 Fifth Street, Santa Rosa, CA 95404
Pleasanton Office:
600 Main Street, Suite E.
Pleasanton, CA 94566
(707) 576-0829

SAN RAMON • (925) 866-0322
SACRAMENTO • (916) 375-1877
WWW.CBG.COM
CIVIL ENGINEERS • SURVEYORS • PLANNERS

REGISTERED PROFESSIONAL ENGINEER
JASON D. VOGAN
59299
CIVIL
STATE OF CALIFORNIA

FREEDOM HIGH SCHOOL

PERFORMING ARTS AND CTE FACILITIES

1050 NEROLY RD
OAKLEY, CA 94561

LIBERTY UNION HIGH SCHOOL DISTRICT

ARCH PROJECT NO:	1739.00
DRAWN BY:	MJV
DRAWING SCALE:	AS NOTED
PTN:	61721-0068

BID SET

AUGUST 13, 2019

SHEET TITLE

UTILITY PLAN

SHEET NUMBER

C-4.0

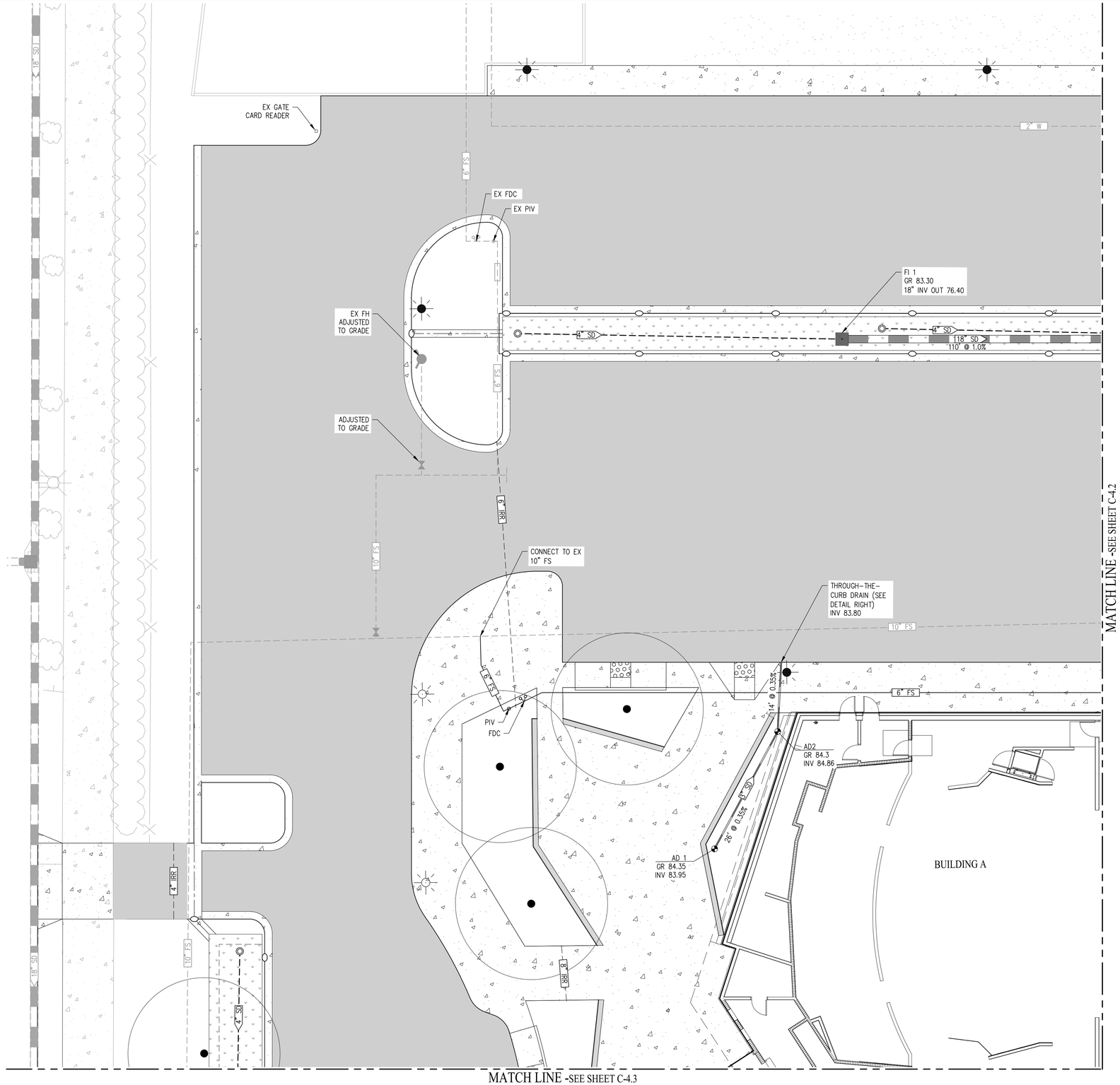

LEGEND

- AC PAVEMENT
- CONCRETE SIDEWALK/GUTTER
- BIO-RETENTION AREA
- 15" SD — PROPOSED STORM DRAIN
- 4" SD — PROPOSED PERFORATED STORM DRAIN
- 4" SS — PROPOSED SEWER LATERAL
- 2" W — PROPOSED WATER LATERAL
- 4" FS — PROPOSED FIRE SERVICE
- IRR — IRRIGATION SLEEVE – SEE LANDSCAPE PLANS
- RAIN WATER LEADER – SEE PLUMBING PLANS
- PIV
- FDC
- PROPOSED MANHOLE
- PROPOSED CATCH BASIN
- AREA DRAIN
- PROPOSED SD OR SS CLEANOUT
- PROPOSED CURB CUT
- PROPOSED STREET LIGHT, SEE ELECTRICAL PLANS
- PROPOSED PENDANT LUMINAIRE, SEE ELECTRICAL PLANS
- 8" SS — EXISTING SEWER
- 18" SD — EXISTING STORM DRAIN
- 12" W — EXISTING WATER
- 6" IRR — EXISTING IRRIGATION
- EXISTING FIELD INLET
- EXISTING MANHOLE

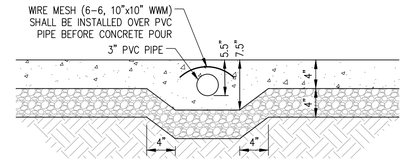

SECTION A
NOT TO SCALE

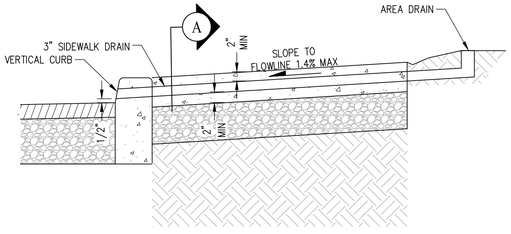

DOWNSPOUT TO SIDEWALK THROUGH- THE-CURB DETAIL
NOT TO SCALE

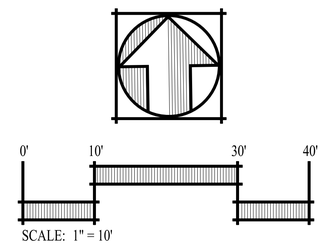

SCALE: 1" = 10'

QUATTROCCHI KWOK ARCHITECTS
Main Office:
636 Fifth Street, Santa Rosa, CA 95404
Pleasanton Office:
600 Main Street, Suite E.
Pleasanton, CA 94566
(707) 576-0829

SAN RAMON • (925) 866-0322
SACRAMENTO • (916) 375-1877
INFO@CBG.COM • WWW.CBG.COM
CIVIL ENGINEERS • SURVEYORS • PLANNERS

REGISTERED PROFESSIONAL ENGINEER
JASON D. VOGAN
59299
CIVIL
STATE OF CALIFORNIA

FREEDOM HIGH SCHOOL

PERFORMING ARTS AND CTE FACILITIES

1050 NEROLY RD
OAKLEY, CA 94561

LIBERTY UNION HIGH SCHOOL DISTRICT

ARCH PROJECT NO:	1739.00
DRAWN BY:	MJV
DRAWING SCALE:	AS NOTED
PTN:	61721-0068

BID SET

AUGUST 13, 2019

SHEET TITLE

UTILITY PLAN

SHEET NUMBER

C-4.1

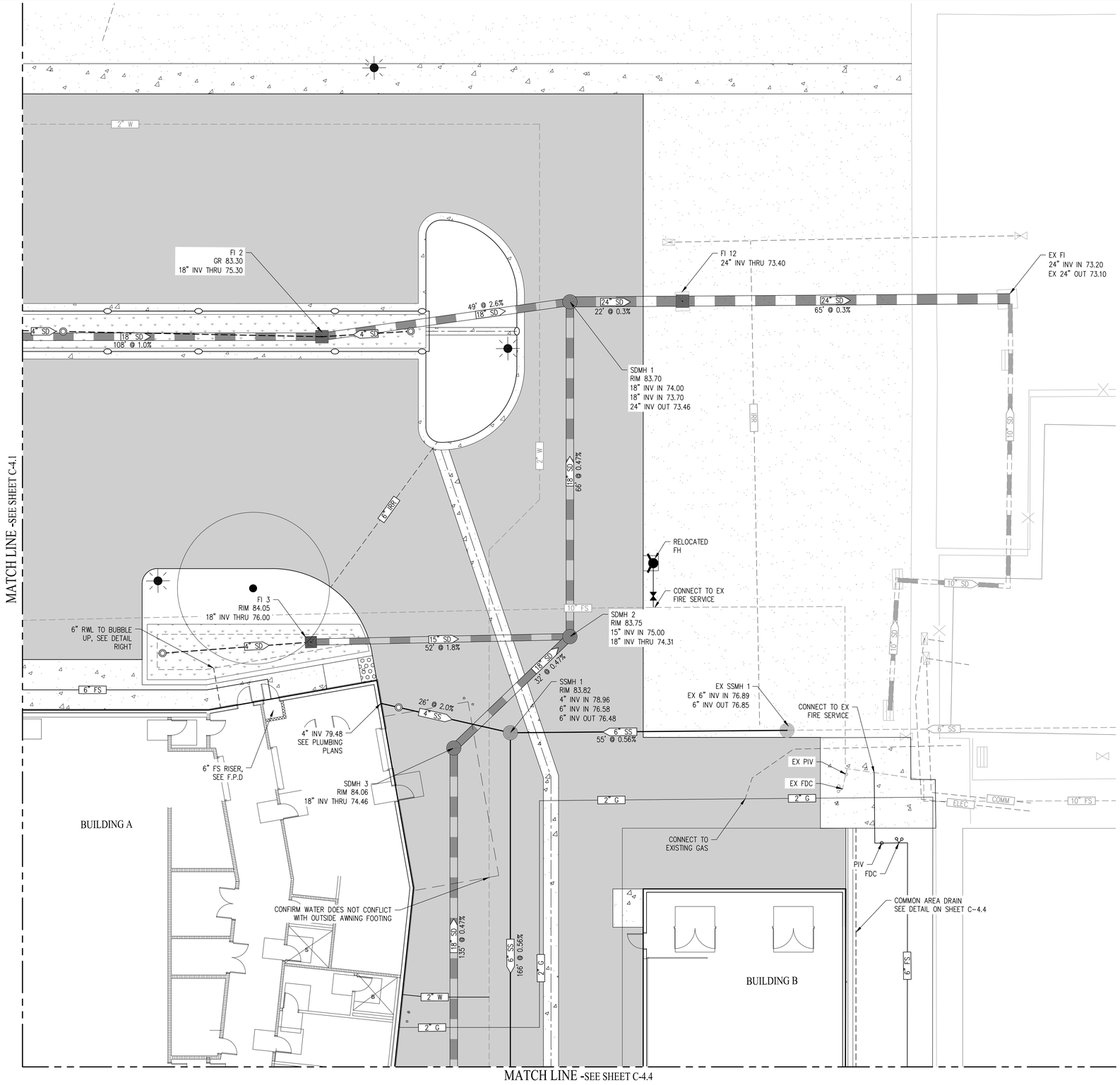

LEGEND

- AC PAVEMENT
- CONCRETE SIDEWALK/GUTTER
- BIO-RETENTION AREA
- 15" SD — PROPOSED STORM DRAIN
- 4" SD — PROPOSED PERFORATED STORM DRAIN
- 4" SS — PROPOSED SEWER LATERAL
- 2" W — PROPOSED WATER LATERAL
- 4" FS — PROPOSED FIRE SERVICE
- IRR — IRRIGATION SLEEVE – SEE LANDSCAPE PLANS
- RAIN WATER LEADER – SEE PLUMBING PLANS
- PIV
- FDC
- PROPOSED MANHOLE
- PROPOSED CATCH BASIN
- AREA DRAIN
- PROPOSED SD OR SS CLEANOUT
- PROPOSED CURB CUT
- PROPOSED STREET LIGHT, SEE ELECTRICAL PLANS
- PROPOSED PENDANT LUMINAIRE, SEE ELECTRICAL PLANS
- 8" SS — EXISTING SEWER
- 18" SD — EXISTING STORM DRAIN
- 12" W — EXISTING WATER
- 6" IRR — EXISTING IRRIGATION
- EXISTING FIELD INLET
- EXISTING MANHOLE

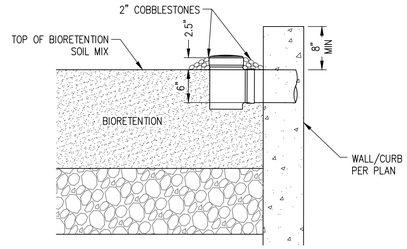

NDS POP-UP DRAINAGE EMITTER
AT BIORETENTION PLANTERS
NOT TO SCALE

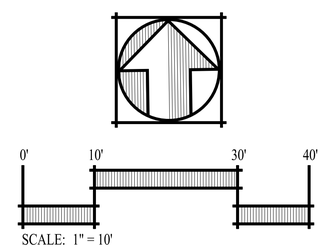

SCALE: 1" = 10'

QUATTROCCHI KWOK
ARCHITECTS
Main Office:
636 Fifth Street, Santa Rosa, CA 95404
Pleasanton Office:
600 Main Street, Suite E.
Pleasanton, CA 94566
(707) 576-0829

SAN RAMON • (925) 866-0322
SACRAMENTO • (916) 375-1877
INFO@CBG.COM
CIVIL ENGINEERS • SURVEYORS • PLANNERS

REGISTERED PROFESSIONAL ENGINEER
JASON D. VOGAN
59299
CIVIL
STATE OF CALIFORNIA

FREEDOM HIGH SCHOOL

PERFORMING ARTS AND CTE FACILITIES

1050 NEROLY RD
OAKLEY, CA 94561

LIBERTY UNION HIGH SCHOOL DISTRICT

ARCH PROJECT NO:	1739.00
DRAWN BY:	MJV
DRAWING SCALE:	AS NOTED
PTN:	61721-0068

BID SET

AUGUST 13, 2019

SHEET TITLE

UTILITY PLAN

SHEET NUMBER

C-4.2

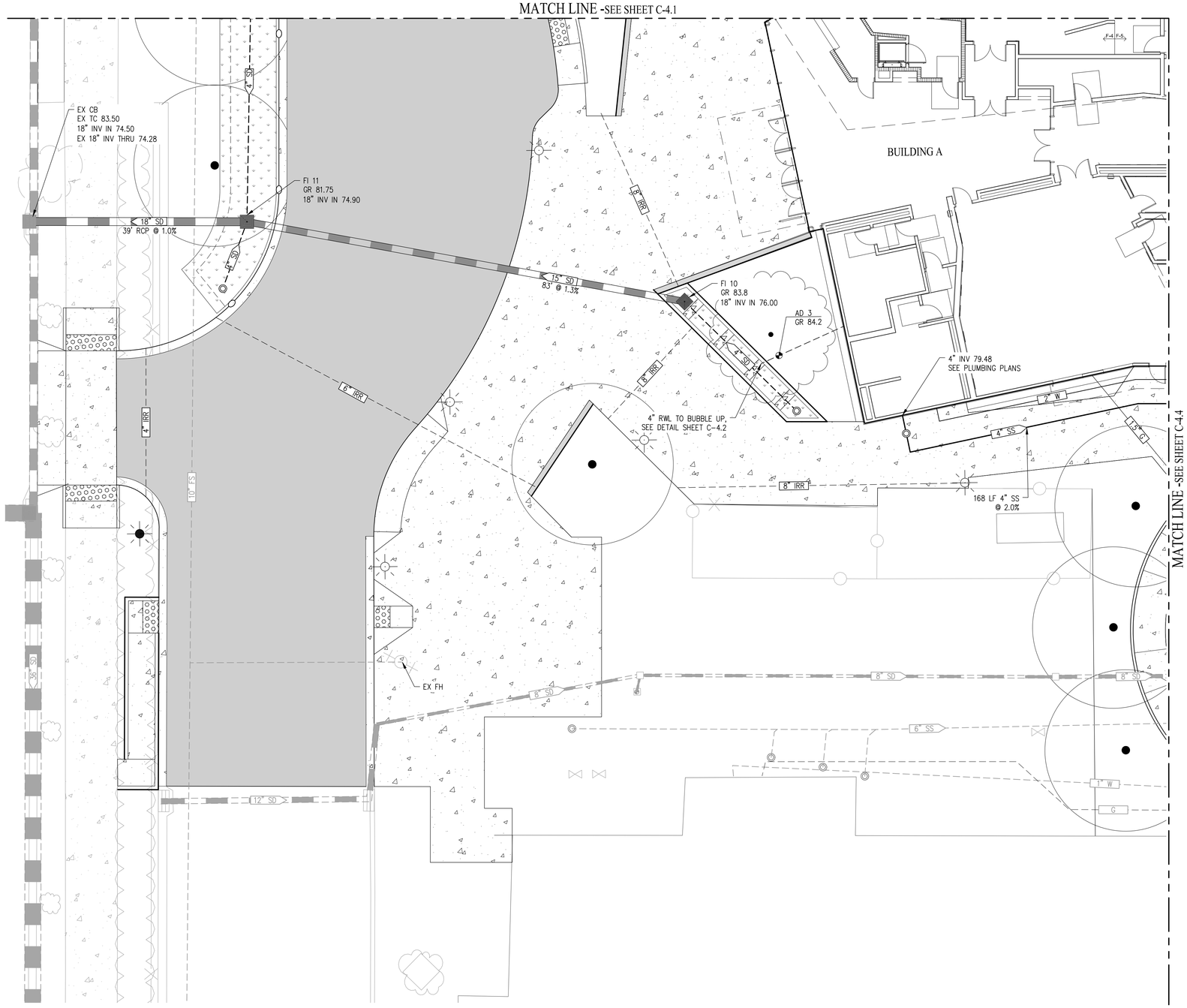

LEGEND

- AC PAVEMENT
- CONCRETE SIDEWALK/GUTTER
- BIO-RETENTION AREA
- 15" SD — PROPOSED STORM DRAIN
- 4" SD — PROPOSED PERFORATED STORM DRAIN
- 4" SS — PROPOSED SEWER LATERAL
- 2" W — PROPOSED WATER LATERAL
- 4" FS — PROPOSED FIRE SERVICE
- IRR — IRRIGATION SLEEVE – SEE LANDSCAPE PLANS
- RAIN WATER LEADER – SEE PLUMBING PLANS
- PIV
- FDC
- PROPOSED MANHOLE
- PROPOSED CATCH BASIN
- AREA DRAIN
- PROPOSED SD OR SS CLEANOUT
- PROPOSED CURB CUT
- PROPOSED STREET LIGHT, SEE ELECTRICAL PLANS
- PROPOSED PENDANT LUMINAIRE, SEE ELECTRICAL PLANS
- 8" SS — EXISTING SEWER
- 18" SD — EXISTING STORM DRAIN
- 12" W — EXISTING WATER
- 6" IRR — EXISTING IRRIGATION
- EXISTING FIELD INLET
- EXISTING MANHOLE

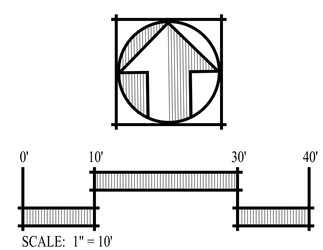

QUATTROCCHI KWOK ARCHITECTS
Main Office:
636 Fifth Street, Santa Rosa, CA 95404
Pleasanton Office:
600 Main Street, Suite E.
Pleasanton, CA 94566
(707) 576-0829

SAN RAMON • (925) 866-0322
SACRAMENTO • (916) 375-1877
WWW.CBG.COM
CIVIL ENGINEERS • SURVEYORS • PLANNERS

REGISTERED PROFESSIONAL ENGINEER
JASON D. VOGAN
59299
CIVIL
STATE OF CALIFORNIA

FREEDOM HIGH SCHOOL

PERFORMING ARTS AND CTE FACILITIES

1050 NEROLY RD
OAKLEY, CA 94561

LIBERTY UNION HIGH SCHOOL DISTRICT

ARCH PROJECT NO:	1739.00
DRAWN BY:	MJV
DRAWING SCALE:	AS NOTED
PTN:	61721-0068

BID SET

AUGUST 13, 2019

SHEET TITLE

UTILITY PLAN

SHEET NUMBER

C-4.3

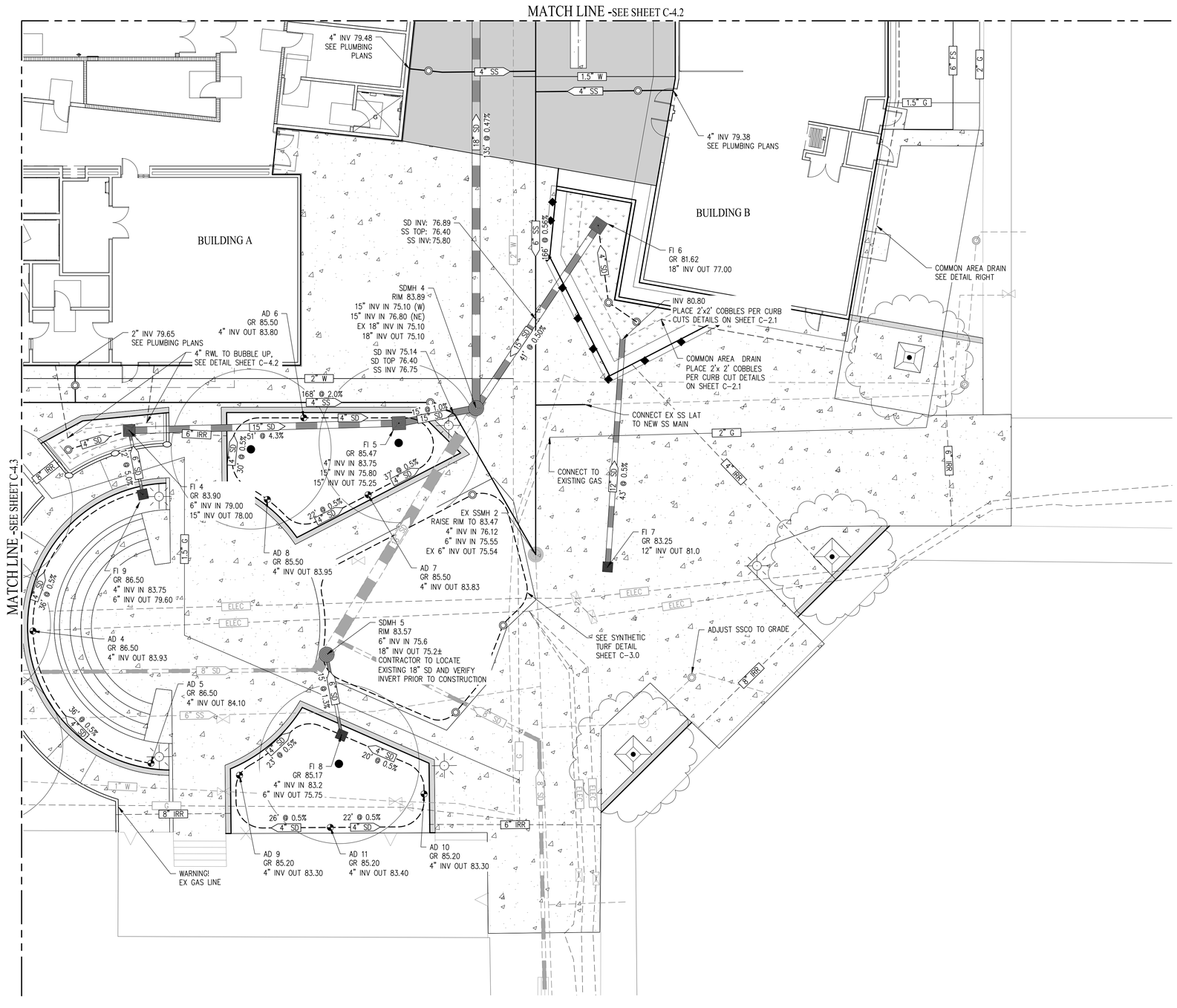

LEGEND

- AC PAVEMENT
- CONCRETE SIDEWALK/GUTTER
- BIO-RETENTION AREA
- PROPOSED STORM DRAIN
- PROPOSED PERFORATED STORM DRAIN
- PROPOSED SEWER LATERAL
- PROPOSED WATER LATERAL
- PROPOSED FIRE SERVICE
- IRRIGATION SLEEVE – SEE LANDSCAPE PLANS
- RAIN WATER LEADER – SEE PLUMBING PLANS
- PIV
- FDC
- PROPOSED MANHOLE
- PROPOSED CATCH BASIN
- AREA DRAIN
- PROPOSED SD OR SS CLEANOUT
- PROPOSED CURB CUT
- PROPOSED STREET LIGHT, SEE ELECTRICAL PLANS
- PROPOSED PENDANT LUMINAIRE, SEE ELECTRICAL PLANS
- EXISTING SEWER
- EXISTING STORM DRAIN
- EXISTING WATER
- EXISTING IRRIGATION
- EXISTING FIELD INLET
- EXISTING MANHOLE

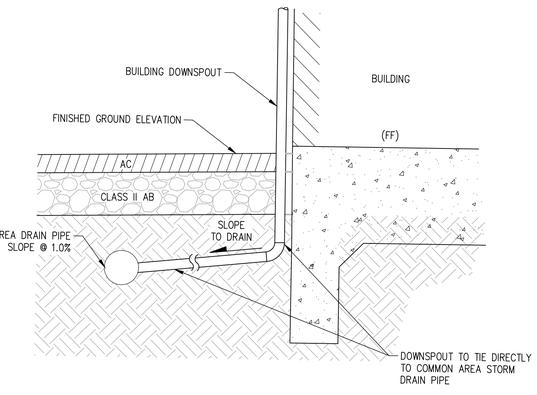

DOWNSPOUT TO COMMON AREA CONNECTION DETAIL

NOT TO SCALE

0' 10' 30' 40'

SCALE: 1" = 10'

QUATTROCCHI KWOK ARCHITECTS
Main Office:
636 Fifth Street, Santa Rosa, CA 95404
Pleasanton Office:
600 Main Street, Suite E.
Pleasanton, CA 94566
(707) 576-0829

SAN RAMON • (925) 866-0322
SACRAMENTO • (916) 375-1877
WWW.CBG.COM
CIVIL ENGINEERS • SURVEYORS • PLANNERS

REGISTERED PROFESSIONAL ENGINEER
JASON D. VOGAN
59299
CIVIL
STATE OF CALIFORNIA

FREEDOM HIGH SCHOOL

PERFORMING ARTS AND CTE FACILITIES

1050 NEROLY RD
OAKLEY, CA 94561

LIBERTY UNION HIGH SCHOOL DISTRICT

ARCH PROJECT NO:	1739.00
DRAWN BY:	MJV
DRAWING SCALE:	AS NOTED
PTN:	61721-0068

BID SET

AUGUST 13, 2019

SHEET TITLE

UTILITY PLAN

SHEET NUMBER

C-4.4

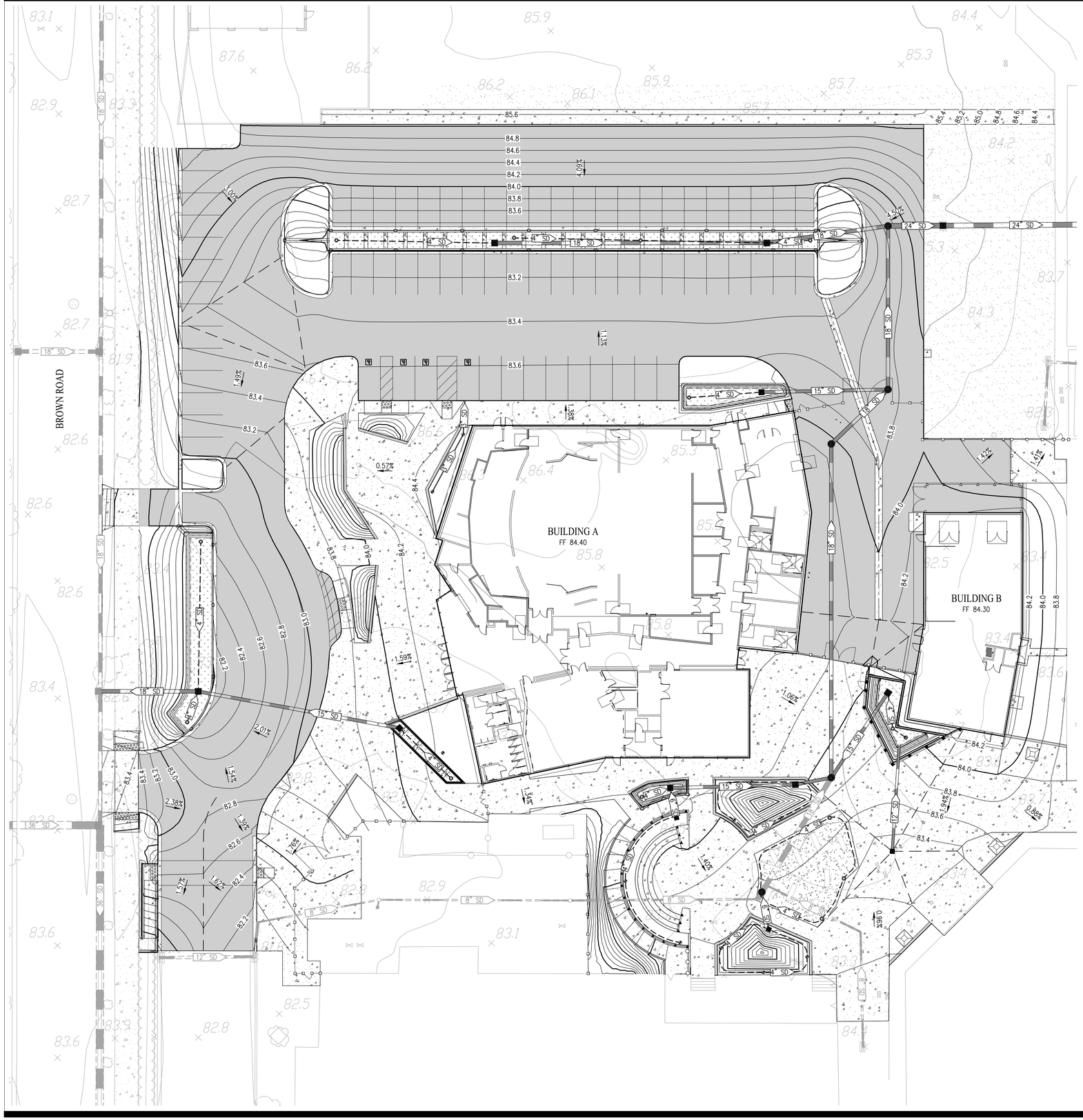

LEGEND

- AC PAVEMENT
- CONCRETE SIDEWALK/GUTTER
- VALLEY GUTTER
- CURB AND GUTTER
- BIO-RETENTION AREA
- 15" SD — PROPOSED STORM DRAIN
- PROPOSED FIELD INLET
- PROPOSED CLEANOUT
- PROPOSED CURB CUT (SEE DETAIL ON SHEET C-3.0)
- 18" SD — EXISTING STORM DRAIN
- EXISTING FIELD INLET
- GRADE BREAK
- EXISTING CONTOUR
- 68.0 — PROPOSED MAJOR CONTOUR
- 67.8 — PROPOSED MINOR CONTOUR

0' 20' 60' 80'

SCALE: 1" = 20'

QUATTROCCHI KWOK ARCHITECTS
Main Office:
636 Fifth Street, Santa Rosa, CA 95404
Pleasanton Office:
600 Main Street, Suite E.
Pleasanton, CA 94566
(707) 576-0829

SAN RAMON • (925) 866-0322
SACRAMENTO • (916) 375-1877
WWW.CBG.COM
CIVIL ENGINEERS • SURVEYORS • PLANNERS

REGISTERED PROFESSIONAL ENGINEER
JASON D. VOGAN
59299
CIVIL
STATE OF CALIFORNIA

FREEDOM HIGH SCHOOL

PERFORMING ARTS AND CTE FACILITIES

1050 NEROLY RD
OAKLEY, CA 94561

LIBERTY UNION HIGH SCHOOL DISTRICT

ARCH PROJECT NO:	1739.00
DRAWN BY:	MJV
DRAWING SCALE:	AS NOTED
PTN:	61721-0068

BID SET

AUGUST 13, 2019

SHEET TITLE

GRADING AND DRAINAGE PLAN

SHEET NUMBER

C-5.0

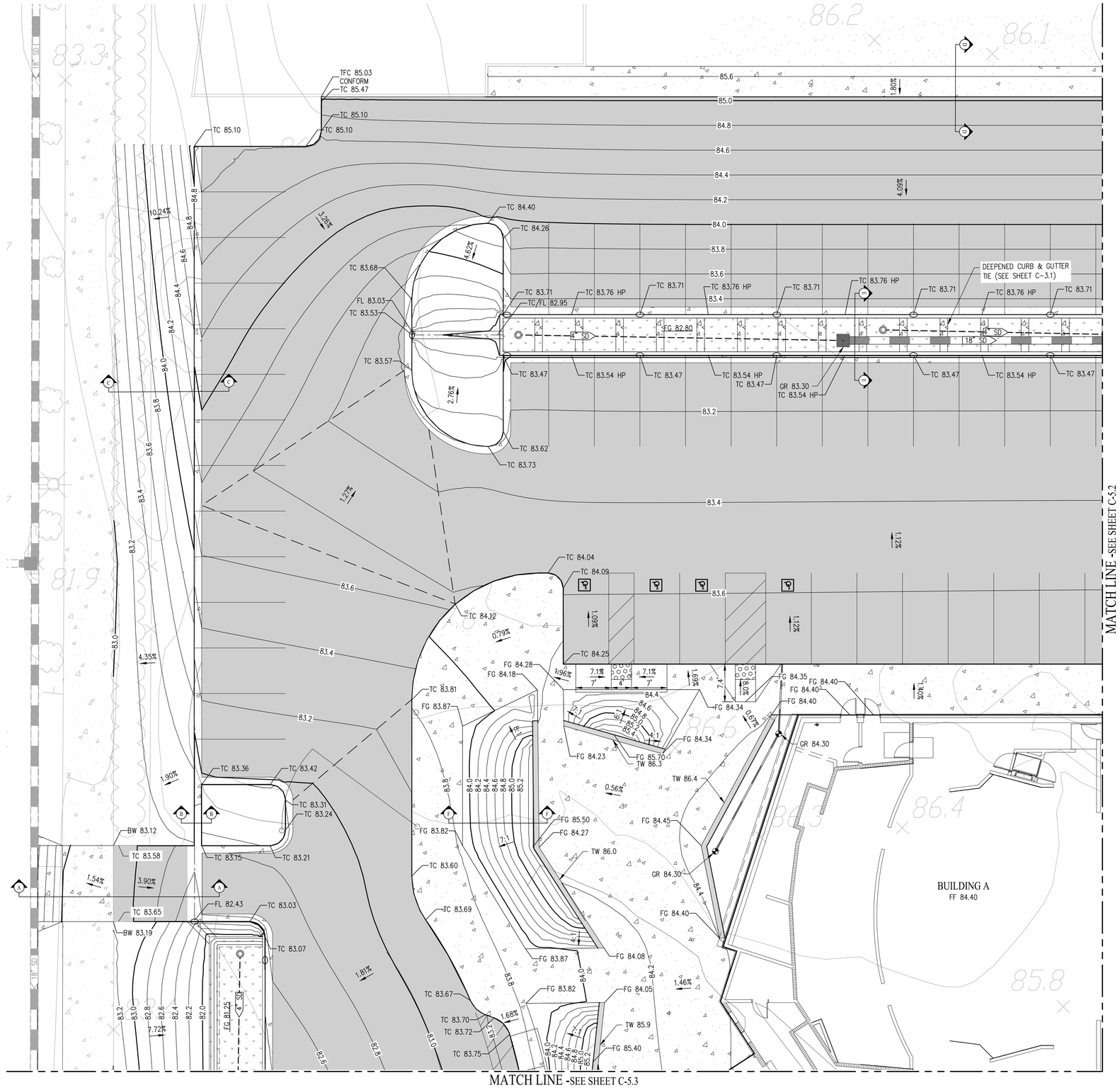

LEGEND

- PROPERTY BOUNDARY
- AC PAVEMENT
- CONCRETE SIDEWALK/GUTTER
- VALLEY GUTTER
- CURB AND GUTTER
- BIO-RETENTION AREA
- 15" SD — PROPOSED STORM DRAIN
- PROPOSED FIELD INLET
- PROPOSED CLEANOUT
- PROPOSED CURB CUT (SEE DETAIL ON SHEET C-2.1)
- 18" SD — EXISTING STORM DRAIN
- EXISTING FIELD INLET
- GRADE BREAK
- EXISTING CONTOUR
- 68.0 — PROPOSED MAJOR CONTOUR
- 67.8 — PROPOSED MINOR CONTOUR

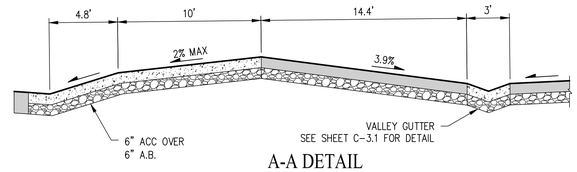

A-A DETAIL
NOT TO SCALE

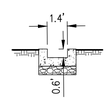

B-B DETAIL
NOT TO SCALE

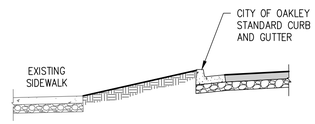

C-C DETAIL
NOT TO SCALE

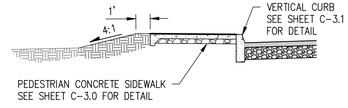

D-D DETAIL
NOT TO SCALE

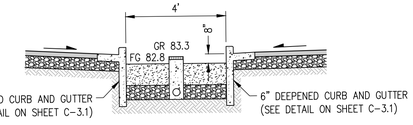

E-E DETAIL
NOT TO SCALE

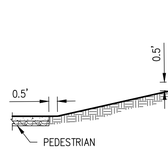

F-F DETAIL
NOT TO SCALE

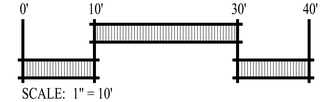

SCALE: 1" = 10'

QUATTROCCHI KWOK
ARCHITECTS
Main Office:
636 Fifth Street, Santa Rosa, CA 95404
Pleasanton Office:
600 Main Street, Suite E.
Pleasanton, CA 94566
(707) 576-0829

SAN RAMON • (925) 866-0322
SACRAMENTO • (916) 375-1877
WWW.CBG.COM • PLANNERS • SURVEYORS • CIVIL ENGINEERS

REGISTERED PROFESSIONAL ENGINEER
JASON D. VOGAN
59299
CIVIL
STATE OF CALIFORNIA

FREEDOM HIGH SCHOOL

PERFORMING ARTS AND CTE FACILITIES

1050 NEROLY RD
OAKLEY, CA 94561

LIBERTY UNION HIGH SCHOOL DISTRICT

ARCH PROJECT NO:	1739.00
DRAWN BY:	MJV
DRAWING SCALE:	AS NOTED
PTN:	61721-0068

BID SET

AUGUST 13, 2019

SHEET TITLE

GRADING AND DRAINAGE PLANS

SHEET NUMBER

C-5.1

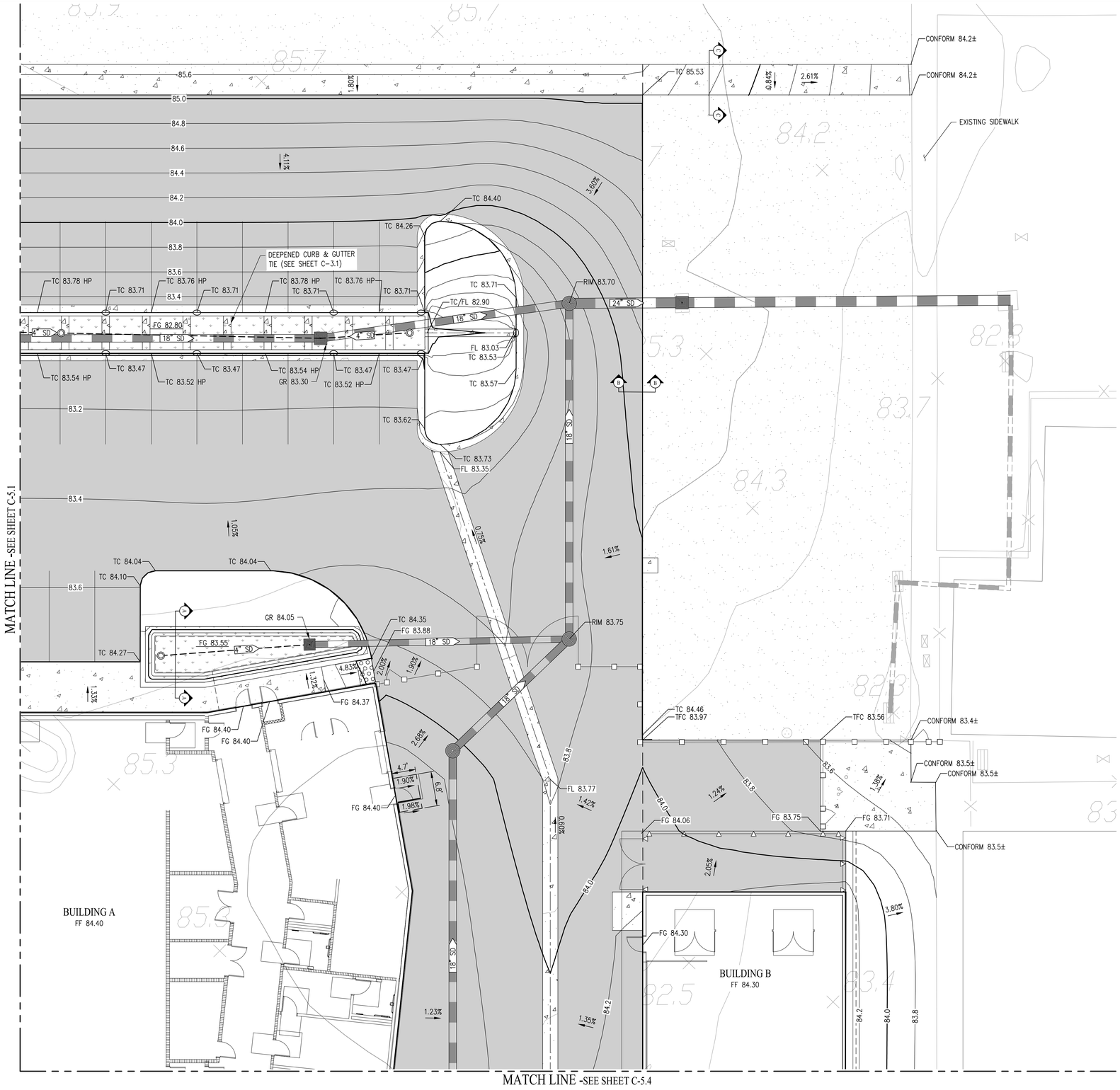

LEGEND

- PROPERTY BOUNDARY
- AC PAVEMENT
- CONCRETE SIDEWALK/GUTTER
- VALLEY GUTTER
- CURB AND GUTTER
- BIO-RETENTION AREA
- 15" SD — PROPOSED STORM DRAIN
- PROPOSED FIELD INLET
- PROPOSED CLEANOUT
- PROPOSED CURB CUT (SEE DETAIL ON SHEET C-2.1)
- 18" SD — EXISTING STORM DRAIN
- EXISTING FIELD INLET
- GRADE BREAK
- EXISTING CONTOUR
- 68.0 — PROPOSED MAJOR CONTOUR
- 67.8 — PROPOSED MINOR CONTOUR

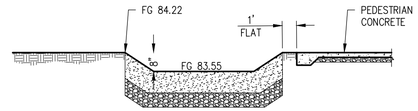

A-A DETAIL
NOT TO SCALE

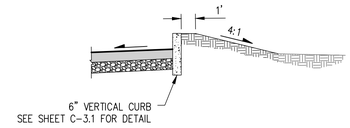

B-B DETAIL
NOT TO SCALE

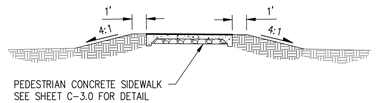

C-C DETAIL

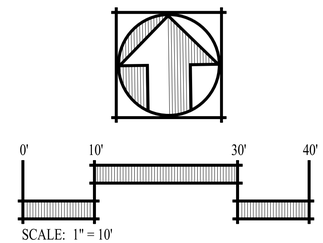

QUATTROCCHI KWOK ARCHITECTS
Main Office:
636 Fifth Street, Santa Rosa, CA 95404
Pleasanton Office:
600 main Street, Suite E.
Pleasanton, CA 94566
(707) 576-0829

SAN RAMON • (925) 866-0322
SACRAMENTO • (916) 375-1877
WWW.CBG.COM • CIVIL ENGINEERS • SURVEYORS • PLANNERS

REGISTERED PROFESSIONAL ENGINEER
JASON D. VOGAN
59299
CIVIL
STATE OF CALIFORNIA

FREEDOM HIGH SCHOOL

PERFORMING ARTS AND CTE FACILITIES

1050 NEROLY RD
OAKLEY, CA 94561

LIBERTY UNION HIGH SCHOOL DISTRICT

ARCH PROJECT NO:	1739.00
DRAWN BY:	MJV
DRAWING SCALE:	AS NOTED
PTN:	61721-0068

BID SET

AUGUST 13, 2019

SHEET TITLE

GRADING AND DRAINAGE PLANS

SHEET NUMBER

C-5.2

MATCH LINE -SEE SHEET C-5.1

MATCH LINE -SEE SHEET C-5.4

BUILDING A
FF 84.40

DEEPENED VERTICAL CURB TIE (SEE SHEET C-3.1)

TC 82.45 LP
GR 81.75
FG 81.25
4" SD
18" SD
15" SD
8" SD
12" SD
TC 82.64
CONFORM 83.7±
CONFORM 83.9±
TC 83.65
TC 84.01
TC 84.55
CONFORM 84.1±
CONFORM 84.0±
0.5'–2' RET WALL
FG 82.67
FG 82.71
FG 82.65
FG 82.66
TW 84.50
FG 82.57
FG 82.59
0.5'–2.5' RET WALL
FG 84.09
FG 84.11
CONFORM 84.1±
FG 84.00
FG 84.02
CONFORM 84.1±
FG ???
0.5'–2.5' RET WALL
EXISTING SIDEWALK
TC 83.74
TC 83.70
TC 83.67
TC 83.64
FG 85.40
TW 85.5
FG 83.81
FG 83.92
FG 84.40
FG 84.40
FG 84.40
FG 84.33
TW 85.95
FG 83.95
GR 83.8
GR 84.2
FG 83.28
FG 83.70
TC 83.41
TW 85.4
FG 83.40
FG 83.43
TC 83.01
FG 84.32
TC 84.82
FG 84.37
TC 84.87
FG 84.18
FG 84.22
FG 84.19
FG 84.24
FG 83.96
FG 82.86
FG 82.90
CONFORM 82.9±
CONFORM 81.9±
CONFORM 82.5±
CONFORM 82.5±
10:1
84.6
84.8
85.0
85.2

LEGEND

- PROPERTY BOUNDARY
- AC PAVEMENT
- CONCRETE SIDEWALK/GUTTER
- VALLEY GUTTER
- CURB AND GUTTER
- BIO–RETENTION AREA
- 15" SD — PROPOSED STORM DRAIN
- PROPOSED FIELD INLET
- PROPOSED CLEANOUT
- PROPOSED CURB CUT (SEE DETAIL ON SHEET C–2.1)
- 18" SD — EXISTING STORM DRAIN
- EXISTING FIELD INLET
- GRADE BREAK
- EXISTING CONTOUR
- 68.0 — PROPOSED MAJOR CONTOUR
- 67.8 — PROPOSED MINOR CONTOUR

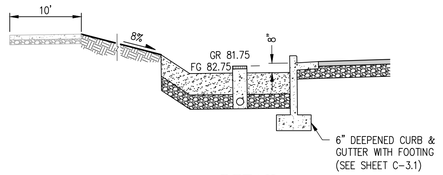

A-A DETAIL
NOT TO SCALE

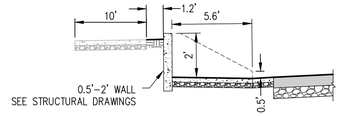

C-C DETAIL
NOT TO SCALE

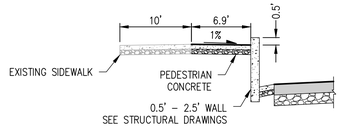

D-D DETAIL
NOT TO SCALE

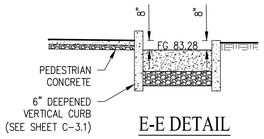

E-E DETAIL
NOT TO SCALE

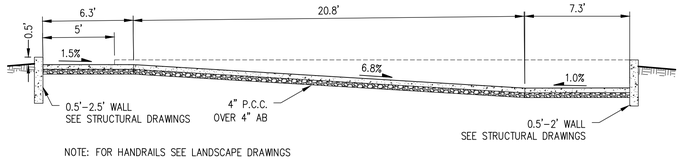

NOTE: FOR HANDRAILS SEE LANDSCAPE DRAWINGS

B-B DETAIL
NOT TO SCALE

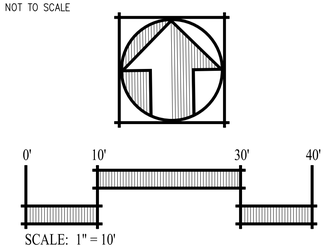

SCALE: 1" = 10'

QUATTROCCHI KWOK ARCHITECTS
Main Office:
636 Fifth Street, Santa Rosa, CA 95404
Pleasanton Office:
600 Main Street, Suite E.
Pleasanton, CA 94566
(707) 576-0829

SAN RAMON • (925) 866-0322
SACRAMENTO • (916) 375-1877
WWW.CBG.COM
CIVIL ENGINEERS • SURVEYORS • PLANNERS

REGISTERED PROFESSIONAL ENGINEER
JASON D. VOGAN
59299
CIVIL
STATE OF CALIFORNIA

FREEDOM HIGH SCHOOL

PERFORMING ARTS AND CTE FACILITIES

1050 NEROLY RD
OAKLEY, CA 94561

LIBERTY UNION HIGH SCHOOL DISTRICT

ARCH PROJECT NO:	1739.00
DRAWN BY:	MJV
DRAWING SCALE:	AS NOTED
PTN:	61721-0068

BID SET

AUGUST 13, 2019

SHEET TITLE

GRADING AND DRAINAGE PLANS

SHEET NUMBER

C-5.3

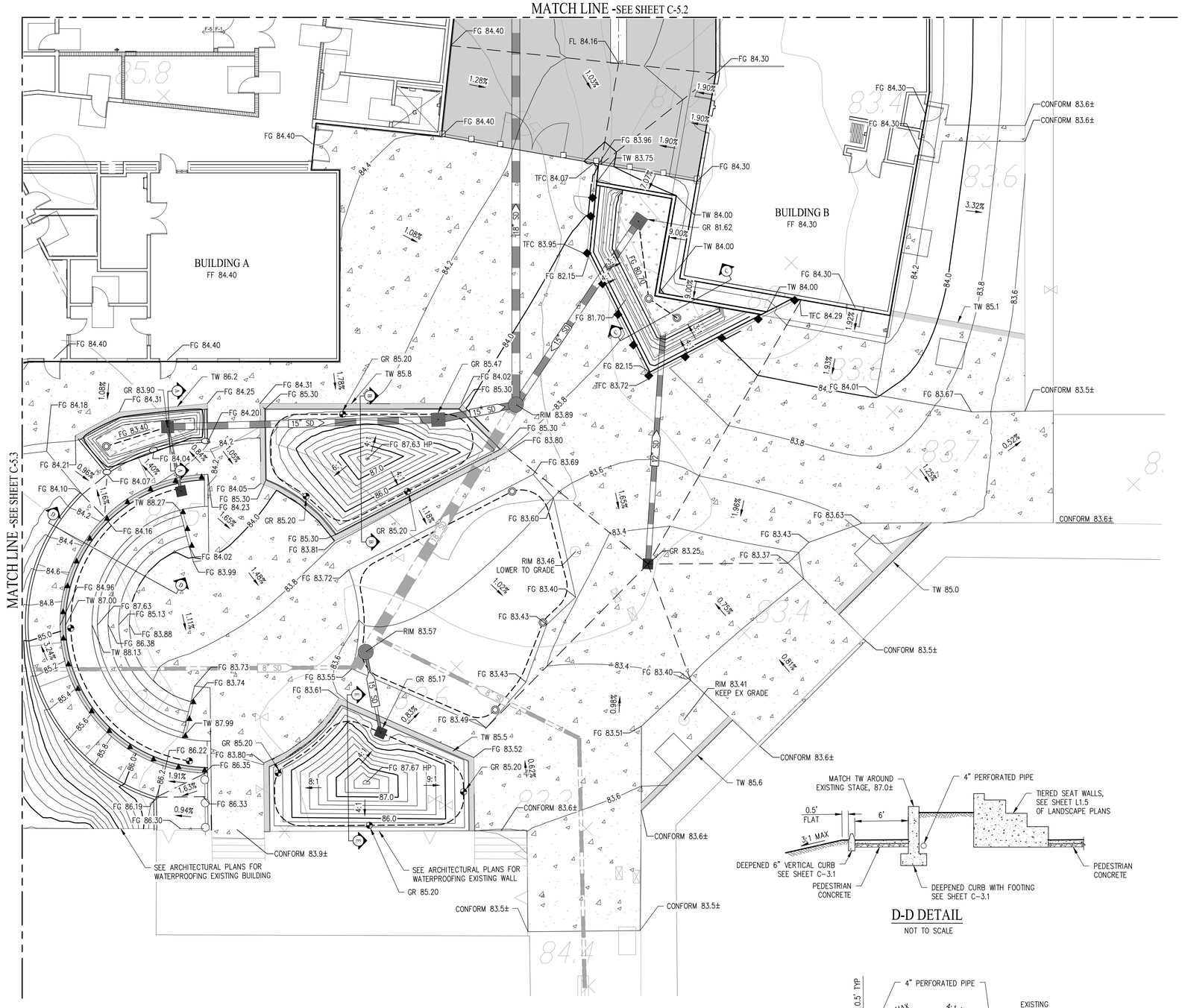
MATCH LINE -SEE SHEET C-5.2
MATCH LINE -SEE SHEET C-5.3
BUILDING A
FF 84.40
BUILDING B
FF 84.30
FG 84.40
FL 84.16
FG 84.30
FG 83.96
TW 83.75
TFC 84.07
TW 84.00
GR 81.62
TFC 83.95
FG 82.15
TFC 84.29
TW 85.1
FG 81.70
TFC 83.72
FG 84.01
FG 83.67
CONFORM 83.6±
CONFORM 83.5±
GR 85.20
GR 85.47
TW 85.8
FG 84.02
FG 85.30
FG 84.31
FG 84.25
FG 84.20
FG 83.90
TW 86.2
FG 84.18
FG 83.40
15" SD
12" SD
18" SD
RIM 83.89
FG 83.80
FG 83.69
FG 87.63 HP
FG 84.21
FG 84.04
FG 84.07
FG 84.10
FG 84.05
FG 84.23
TW 88.27
FG 84.16
FG 84.02
FG 83.99
GR 85.20
FG 83.81
FG 83.72
FG 83.60
FG 83.63
FG 83.43
FG 83.37
GR 83.25
RIM 83.46
LOWER TO GRADE
FG 83.40
RIM 83.57
TW 84.96
TW 87.00
FG 87.63
FG 85.13
FG 83.88
FG 86.38
TW 88.13
FG 83.73
FG 83.74
FG 83.55
FG 83.61
GR 85.17
TW 87.99
FG 83.49
RIM 83.41
KEEP EX GRADE
FG 83.51
TW 85.5
FG 83.52
GR 85.20
FG 87.67 HP
FG 83.80
FG 86.35
FG 86.22
FG 86.19
FG 86.33
FG 86.30
TW 85.6
CONFORM 83.6±
CONFORM 83.9±
CONFORM 83.5±
SEE ARCHITECTURAL PLANS FOR WATERPROOFING EXISTING BUILDING
SEE ARCHITECTURAL PLANS FOR WATERPROOFING EXISTING WALL
GR 85.20
TW 85.0
CONFORM 83.5±
CONFORM 83.6±
CONFORM 83.6±
CONFORM 83.6±
CONFORM 83.6±
CONFORM 83.5±
1.28%
1.03%
1.90%
1.90%
1.90%
3.32%
9.00%
9.00%
1.92%
1.92%
1.08%
1.08%
1.10%
0.96%
1.05%
1.65%
1.98%
1.22%
0.52%
0.73%
0.81%
0.98%
0.83%
1.91%
1.63%
0.94%
1.02%
1.45%
1.11%
1.24%
1.24%
1.37%
1.37%
1.37

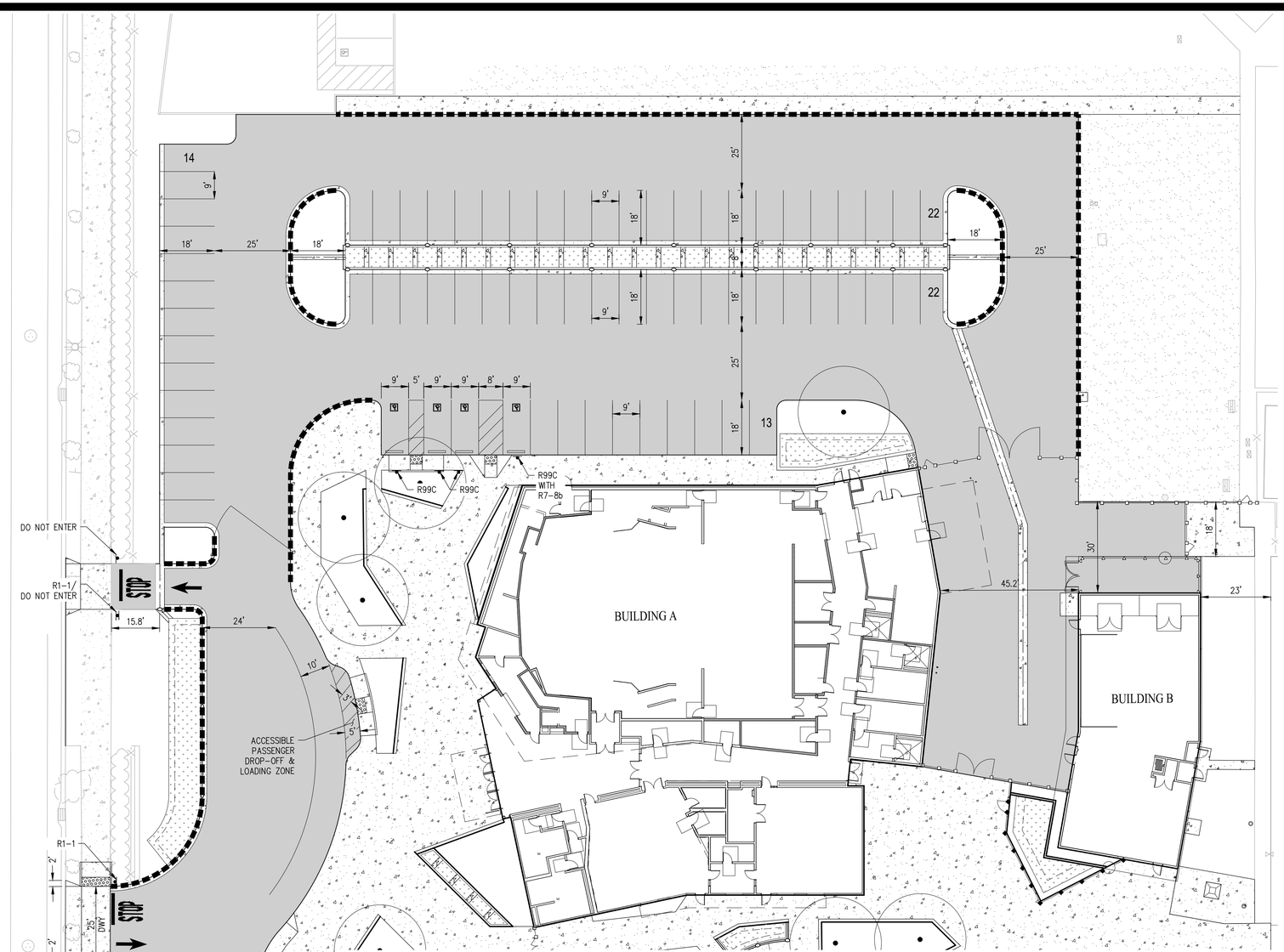

UNAUTHORIZED VEHICLES PARKED IN DESIGNATED ACCESSIBLE SPACES NOT DISPLAYING DISTINGUISHABLE PLACARDS OR SPECIAL LICENSE PLATES ISSUED FOR PERSONS WITH DISABILITIES WILL BE TOWED AWAY AT THE OWNER'S EXPENSE

TOWED VEHICLES MAY BE RECLAIMED AT
OAKLEY POLICE DEPARTMENT
OR BY TELEPHONING
625-8060

TOW AWAY SIGN (R100B)
NOT TO SCALE

LEGEND

- WHEEL STOP
- 26 — PARKING COUNT
- SIGN
- RED CURB WITH THE WORDS "FIRE LANE – NO PARKING – CVC 22500.1"

ABBREVIATIONS

ISA	INTERNATIONAL SYMBOL OF ACCESSIBILITY
R99C (CA)	ACCESSIBLE PARKING ONLY SIGN
R7-8b (CA)	VAN ACCESSIBLE SIGN
R1-1	STOP SIGN
SNS	STREET NAME SIGN
R100B	TOW AWAY SIGN

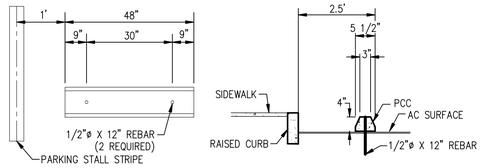

① PASSENGER VEHICLE WHEEL STOP (OR APPROVED EQUAL)
(NOT TO SCALE)



ACCESSIBLE PARKING ONLY SIGN (R99C)
NOT TO SCALE



VAN ACCESSIBILE SIGN (R7-8b)
NOT TO SCALE

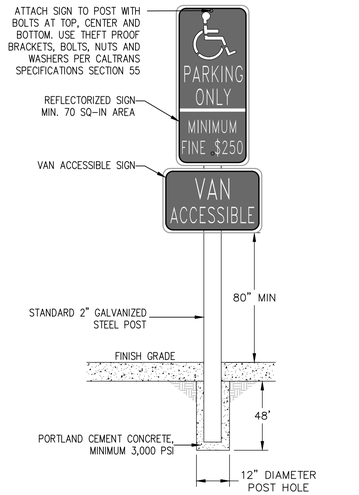

VAN ACCESSIBILE SIGN PLACEMENT
NOT TO SCALE

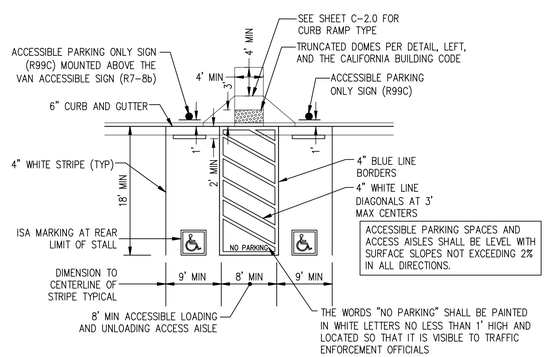

③ ACCESSIBLE PARKING STALL

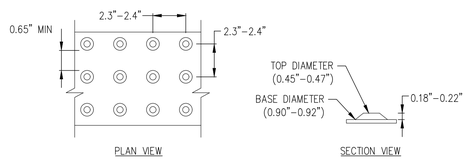

TYPICAL TRUNCATED DOME DETAIL PER CBC 11B-705.1.1
COLOR TO BE YELLOW
NOT TO SCALE

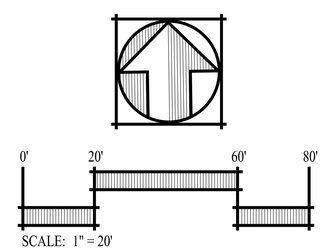

SCALE: 1" = 20'

QUATTROCCHI KWOK ARCHITECTS
Main Office:
636 Fifth Street, Santa Rosa, CA 95404
Pleasanton Office:
600 Main Street, Suite E.
Pleasanton, CA 94566
(707) 576-0829

SAN RAMON • (925) 866-0322
SACRAMENTO • (916) 375-1877
WWW.CBG.COM
CIVIL ENGINEERS • SURVEYORS • PLANNERS

REGISTERED PROFESSIONAL ENGINEER
JASON D. VOGAN
59299
CIVIL
STATE OF CALIFORNIA

FREEDOM HIGH SCHOOL

PERFORMING ARTS AND CTE FACILITIES

1050 NEROLY RD
OAKLEY, CA 94561

LIBERTY UNION HIGH SCHOOL DISTRICT

ARCH PROJECT NO:	1739.00
DRAWN BY:	MJV
DRAWING SCALE:	AS NOTED
PTN:	61721-0068

BID SET

AUGUST 13, 2019

SHEET TITLE

SIGNING & STRIPING PLAN

SHEET NUMBER

C-6.0

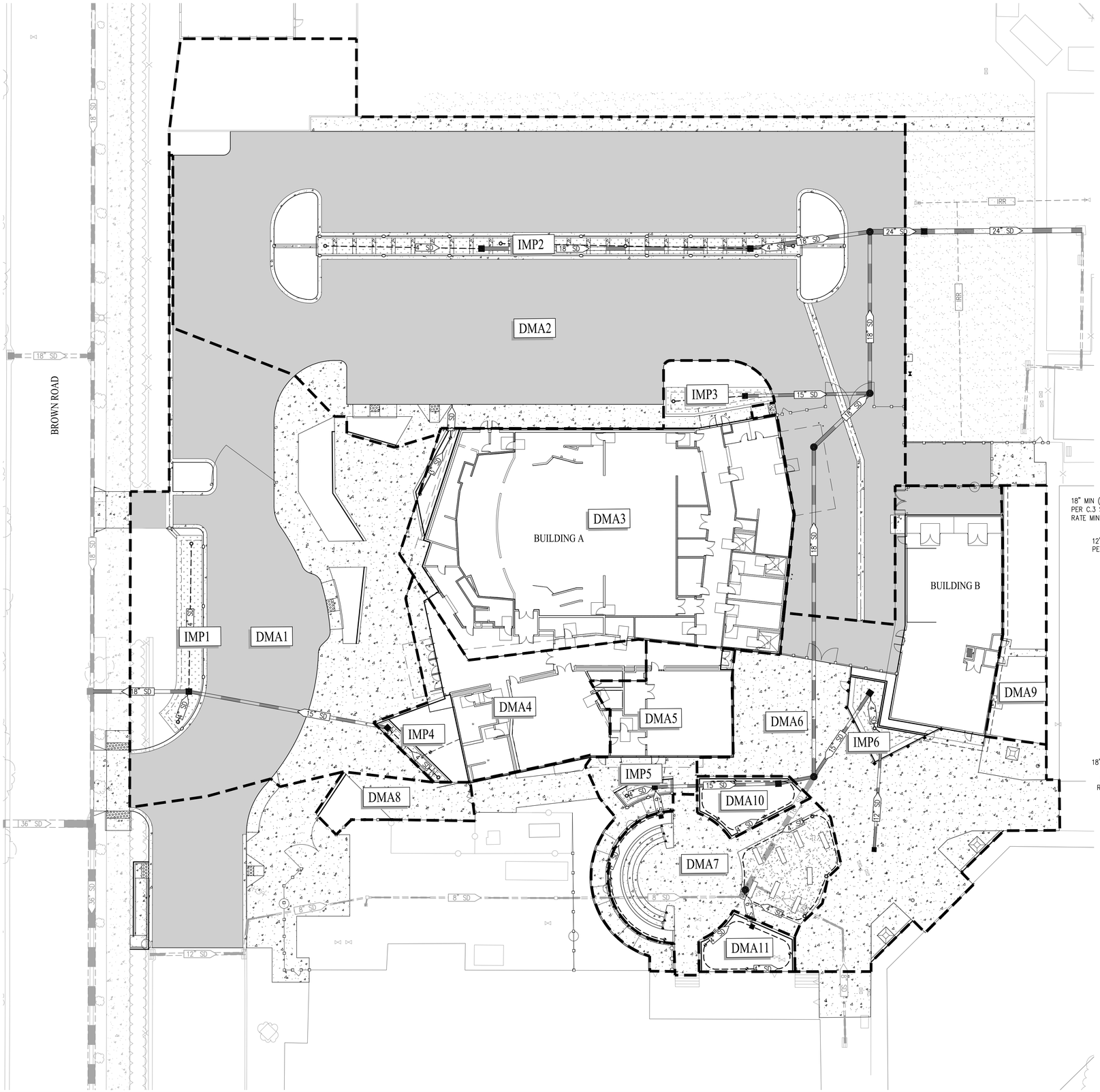

LEGEND

IMP 1 — INTEGRATED MANAGEMENT PRACTICE – BIORETENTION AREA

DRAINAGE MANAGEMENT AREA BOUNDARY

DMA 1 — DRAINAGE MANAGEMENT AREA DRAINING TO PARKING INFILTRATION TRENCH AREA OR BIO-RETENTION AREA

BIORETENTION AREAS

DMA	PROVIDED TREATMENT AREA (SF)	PONDING DEPTH (INCHES)
1	838	6
2	1,320	6
3	387	6
4	134	6
5	128	6
6	337	11
TOTAL	3,144	N/A

NOTE: DMAS 7, 8 AND 9 ARE SELF-RETAINING AREAS. IMPERVIOUS AREA DRAINING TO PERVIOUS AREA WILL BE LIMITED TO A RATIO OF 2:1. DMAS 10 AND 11 ARE SELF-TREATING AREAS.

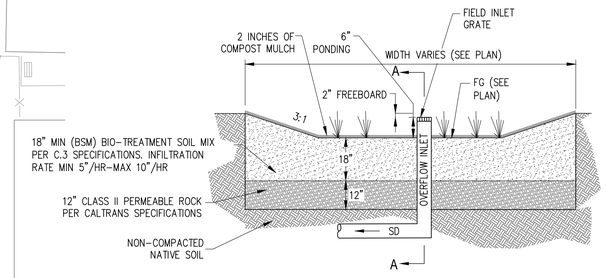

TYPICAL BIORETENTION CROSS SECTION

NOT TO SCALE

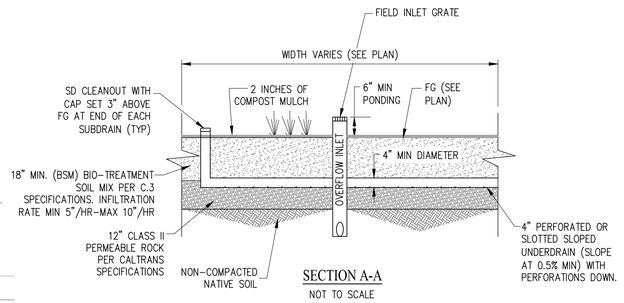

SECTION A-A

NOT TO SCALE

NOTE: IMPS 5 AND 6 HAVE AN IMPERMEABLE MEMBRANE AROUND THE SOIL AND ROCK SELECTION. IN THIS INSTANCE, THE PERFORATED PIPE SHALL BE AT THE BOTTOM OF THE ROCK LAYER, SLOPED TOWARD THE OVERFLOW INLET.

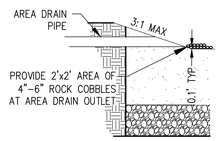

ROCK AT AREA DRAIN OUTLET

NOT TO SCALE

0' 20' 60' 80'

SCALE: 1" = 20'

QUATTROCCHI KWOK ARCHITECTS
Main Office:
636 Fifth Street, Santa Rosa, CA 95404
Pleasanton Office:
600 Main Street, Suite E.
Pleasanton, CA 94566
(707) 576-0829

SAN RAMON • (925) 866-0322
SACRAMENTO • (916) 375-1877
WWW.CBG.COM
CIVIL ENGINEERS • SURVEYORS • PLANNERS

REGISTERED PROFESSIONAL ENGINEER
JASON D. VOGAN
59299
CIVIL
STATE OF CALIFORNIA

FREEDOM HIGH SCHOOL

PERFORMING ARTS AND CTE FACILITIES

1050 NEROLY RD
OAKLEY, CA 94561

LIBERTY UNION HIGH SCHOOL DISTRICT

ARCH PROJECT NO:	1739.00
DRAWN BY:	MJV
DRAWING SCALE:	AS NOTED
PTN:	61721-0068

BID SET

AUGUST 13, 2019

SHEET TITLE

STORM WATER CONTROL PLAN

SHEET NUMBER

C-7.0

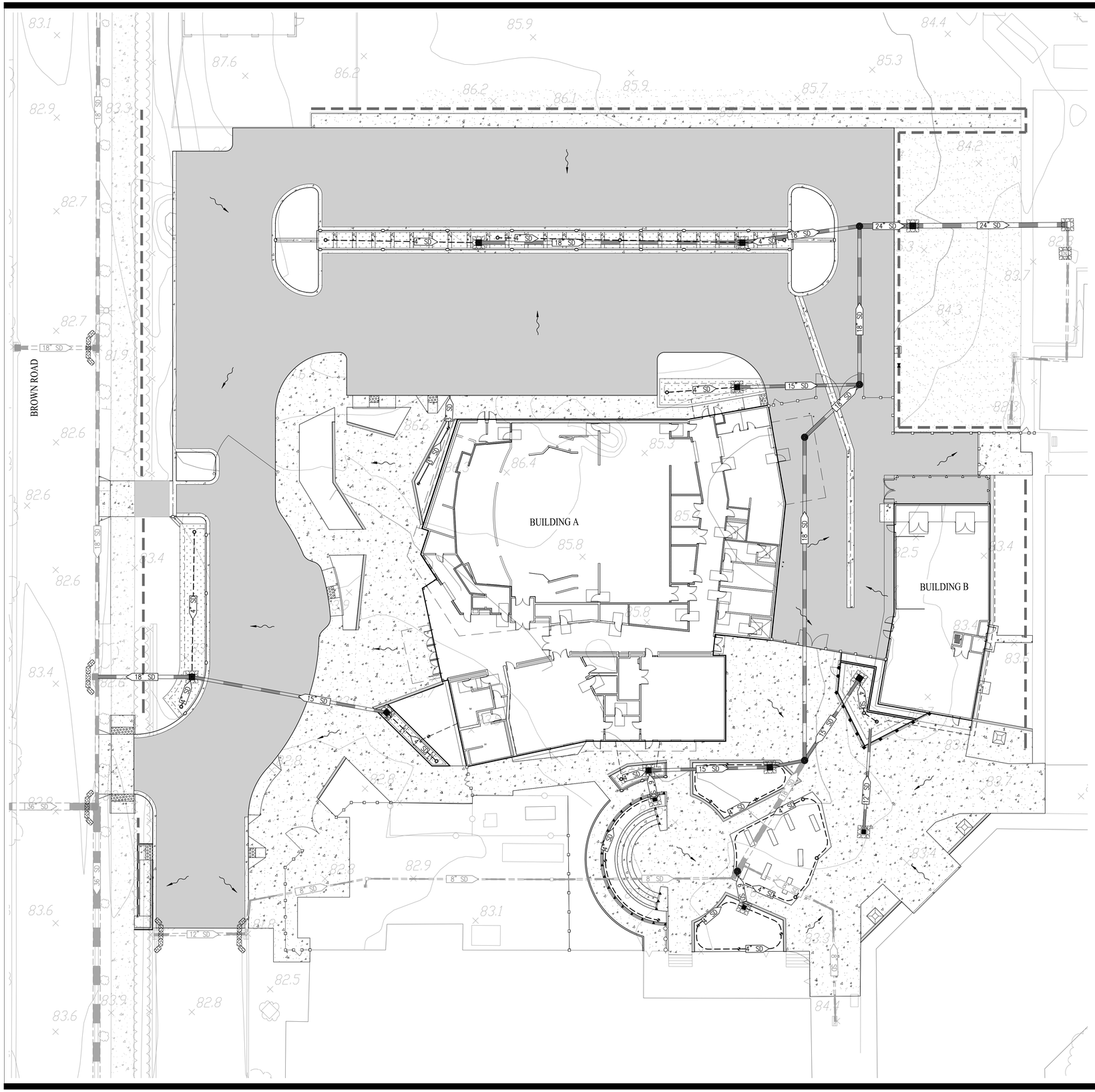

WDID #:

GENERAL NOTES:

1.	LEGALLY RESPONSIBLE PARTY/PERSON (LRP) OWNER/SUBDIVIDER:	LIBERTY UNION HIGH SCHOOL DISTRICT 850 2ND STREET BRENTWOOD, CA 94513
2.	CIVIL ENGINEER:	CARLSON, BARBEE & GIBSON, INC. 2633 CAMINO RAMON, SUITE 350 SAN RAMON, CA 94583 (925) 866-0322 JASON VOGAN, RCE 59299
3.	GEOTECHNICAL ENGINEER:	GEOSPHERE CONSULTANTS, INC. 2001 CROW CANYON ROAD, SUITE 210 SAN RAMON, CA 94583 (925) 314-7180 COREY DARE

LEGEND

- DIRECTION OF FLOW WITH STORM DRAIN INSTALLED
- FIELD INLET PROTECTION – (SE-10)
- CURB INLET PROTECTION – (SE-10)
- FIBER ROLL – (SE-5)
- STABILIZED CONSTRUCTION ENTRANCE/EXIT – (TC-1)
- FIELD INLET
- CURB CUT
- 15" SD — PROPOSED STORM DRAIN
- EX 18" SD — EXISTING STORM DRAIN

NOTE:

* STORMWATER DISCHARGE SAMPLING LOCATIONS ARE SUBJECT TO CHANGE AND WILL BE REMOVED, RELOCATED OR ADDED AT THE QSP'S DISCRETION.

APPLICABLE (BUT NOT LIMITED TO) CURRENT CASQA STORMWATER BMP CONSTRUCTION HANDBOOK

EC-1	SCHEDULING
EC-3	HYDROMULCH
EC-4	HYDROSEED
NS-1	WATER CONSERVATION PRACTICES
NS-2	DEWATERING OPERATIONS
NS-3	PAVING & GRINDING OPERATIONS
NS-8	VEHICLE & EQUIPMENT CLEANING
NS-9	VEHICLE & EQUIPMENT FUELING
NS-10	VEHICLE & EQUIPMENT MAINTENANCE
NS-12	CONCRETE CURING
NS-13	CONCRETE FINISHING
SE-1	SILT FENCE
SE-4	CHECK DAMS
SE-5	FIBER ROLLS
SE-10	DI PROTECTION TYPE 1
SE-10	DI PROTECTION TYPE 2
SE-10	DI PROTECTION TYPE 3
TC-1	STABILIZED CONSTRUCTION ENTRANCE/EXIT
TC-2	STABILIZED CONSTRUCTION ROADWAY
TC-3	ENTRANCE & OUTLET TIRE WASH
WE-1	WIND EROSION CONTROL
WM-1	MATERIAL DELIVERY & STORAGE
WM-2	MATERIAL USE
WM-3	STOCKPILE MANAGEMENT
WM-8	CONCRETE WASTE MANAGEMENT
WM-9	SANITARY/SEPTIC WASTE MANAGEMENT

0' 20' 60' 80'

SCALE: 1" = 20'

QUATTROCCHI KWOK ARCHITECTS
Main Office:
636 Fifth Street, Santa Rosa, CA 95404
Pleasanton Office:
600 Main Street, Suite E.
Pleasanton, CA 94566
(707) 576-0829

SAN RAMON • (925) 866-0322
SACRAMENTO • (916) 375-1877
WWW.CBANDG.COM
CIVIL ENGINEERS • SURVEYORS • PLANNERS

REGISTERED PROFESSIONAL ENGINEER
JASON D. VOGAN
59299
CIVIL
STATE OF CALIFORNIA

FREEDOM HIGH SCHOOL

PERFORMING ARTS AND CTE FACILITIES

1050 NEROLY RD
OAKLEY, CA 94561

LIBERTY UNION HIGH SCHOOL DISTRICT

ARCH PROJECT NO:	1739.00
DRAWN BY:	MJV
DRAWING SCALE:	AS NOTED
PTN:	61721-0068

BID SET

AUGUST 13, 2019

SHEET TITLE

EROSION CONTROL PLAN

SHEET NUMBER

C-8.0

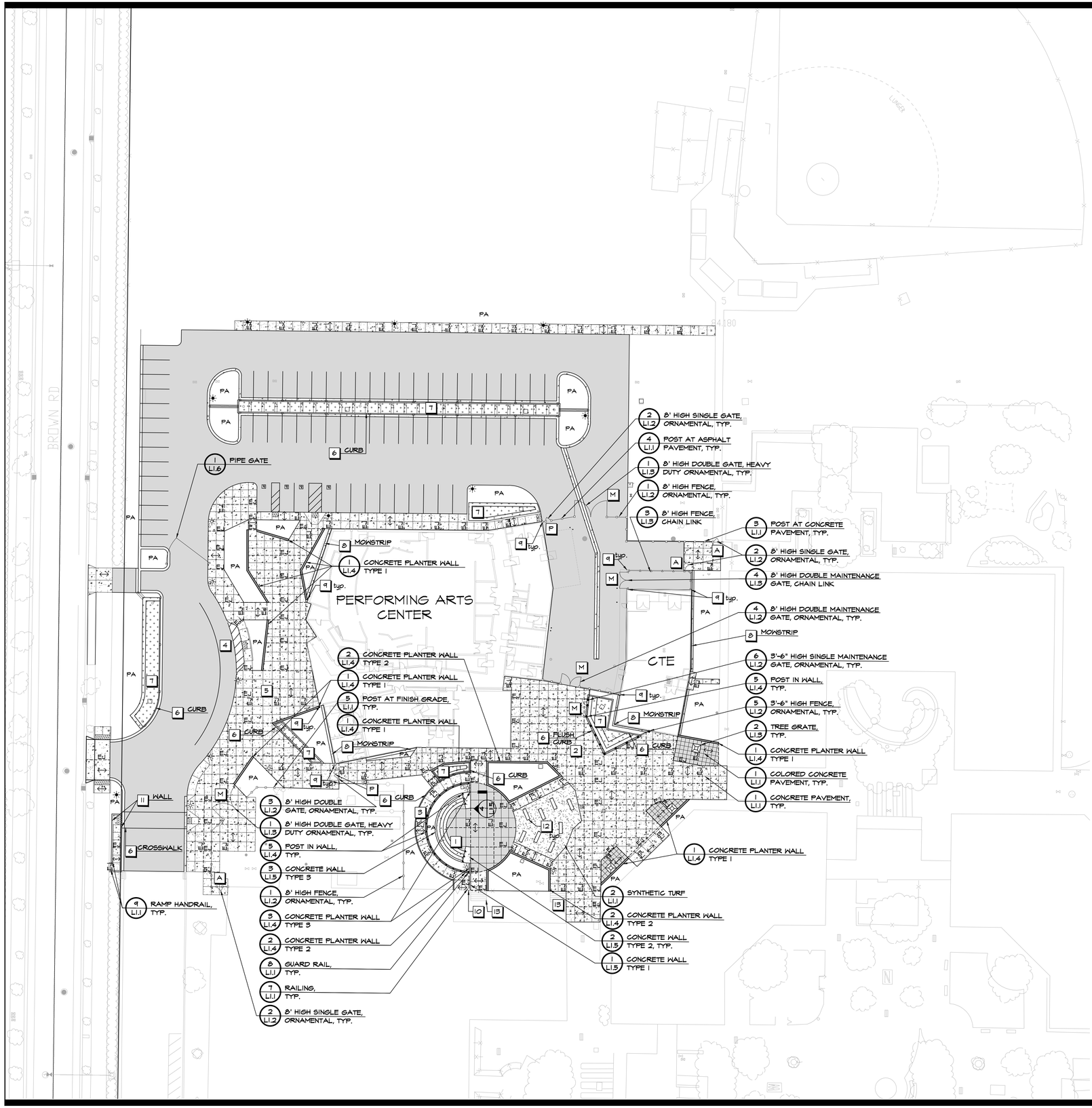

MATERIAL LEGEND

- Guard Rail
- Railing
- Existing Fence
- 3'-6" High Fence, Ornamental
- 8' High Fence, Ornamental
- 8' High Fence, Chain Link, Black Vinyl
- 3'-6" High Single Maintenance Gate, Ornamental
- 8' High Single Gate, Ornamental
- 8' High Double Gate, Ornamental
- 8' High Double Maintenance Gate, Ornamental
- 8' High Double Gate, Heavy Duty Ornamental
- 8' High Double Maintenance Gate, Chain Link, Black Vinyl
- Concrete Wall. See Structural Drawings, unless otherwise noted
- Concrete Planter Wall. See Structural Drawings
- Natural Basalt Stone. 7' long, 18" thick pieces set on synthetic turf
- Tree Grate
- EJ Expansion Joint. See Civil Drawings
- Tooled Control Joint. See Civil Drawings
- Direction of broom finish
- PA Planting Area
- Concrete Pavement. Concrete shall have a slip resistant broom finish in the direction shown on this sheet.
- Colored Concrete Pavement. Integral color shall be Scofield Charcoal #C-24, or approved equal. Concrete shall have a slip resistant broom finish in the direction shown on this sheet and shall have a clear sealer applied.
- Asphalt Pavement. See Civil Drawings
- Biofiltration Facilities. See Civil Drawings
- Synthetic Turf. Synthetic turf shall be Nutmeg Premium (or approved equal), with Rounded Silica Granules infill, as available through FieldTurf. Contact Charles Colletti, (858) 208-8449, Charles.colletti@fieldturfcommercial.com. See Civil Drawings for Base and Drainage.

P	Panic Hardware Gate
A	Accessible Lever Gate
M	Maintenance Gate
Refer to General Fencing and Gate Notes and Schedules on L1.3	

KEY NOTES

1	Tiered Seat Walls	8	See Architectual Drawings
2	Art Plaza	9	Post and walls shall be 4" clear max. at building, typ.
3	Accessible Walkway	10	Extend railing to existing and weld to post
4	Drop Off	11	See Structural Drawings
5	Theater Plaza	12	7' long, 18" thick Natural Basalt stone pieces set on synthetic turf. Basalt stone is available through Coverall Stone, (800) 779-3234.
6	See Civil Drawings		
7	Biofiltration Facilities. See Civil Drawings	13	Existing stairs and handrails to remain

CONCRETE NOTES

1. Subgrade preparation shall be done in accordance with the recommendations in the Geotechnical Report.
2. Tooled control joints shall run continuously and extend through integral curbs and thickened edges. Tooled control joint layout shall be as shown on the Layout Plan, and coincide with the corners of objects, structures and the beginning and ends of curves. Joints should have a minimum depth of 25% of the slab thickness, unless otherwise noted on plans.
3. Expansion joints shall be laid out as shown on the Layout Plan.
4. Contractor shall place 3/8" asphalt impregnated fiber board where new concrete meets building, walls, curbs and planters.
5. The base rock layer, prior to placement of concrete, shall be sprinkled with clean water several times to restore any moisture that may have been lost after completion of compaction.
6. Cure concrete with curing compound or keep continuously moist for a minimum of 7 days.
7. Contractor shall prepare a 4'x4' sample of all flatwork and 4' length of all walls and curb in the field prior to construction, for review and approval by the District.
8. Concrete pavement with slopes less than 6% shall receive a medium broom finish and slopes greater than 6% shall receive a heavy broom finish. Finish shall be in the direction shown on this sheet.

NORTH

0 30' 60'

GRAPHIC SCALE IN FEET
1"=30'-0"

QUATTROCCHI KWOK ARCHITECTS
Main Office:
636 Fifth Street, Santa Rosa, CA 95404
Pleasanton Office:
600 Main Street, Suite E,
Pleasanton, CA 94566
(707) 576-0829

GSM landscape architects, inc.
1700 Soscol Ave. Suite 23
Napa, CA 94559
707-255-4630
www.gsmlainc.com

REGISTERED LANDSCAPE ARCHITECT
STEPHEN STRANZL
No. 2790
Exp. 10-31-20
STATE OF CALIFORNIA

FREEDOM HIGH SCHOOL

PERFORMING ARTS AND CTE FACILITIES

1050 Neroly Rd
Oakley, CA 94561

Liberty Union High School District

ARCH PROJECT NO:	1739.00
DRAWN BY:	JMH/HDJ
DRAWING SCALE:	AS SHOWN
PTN:	61721-0068

BID SET

AUGUST 13, 2019

SHEET TITLE

MATERIAL AND DETAIL REFERENCE PLAN

SHEET NUMBER

L1.0

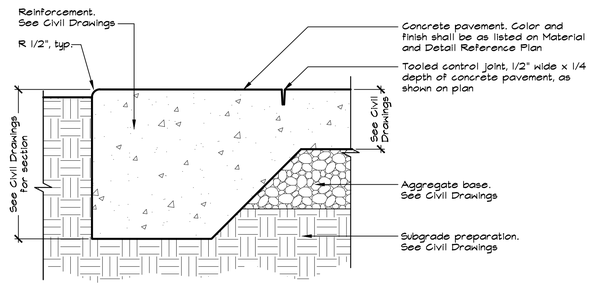

NOTES:

1. See Concrete Notes on the Material and Detail Reference Plan in addition to requirements in the Specifications.
2. See Material and Detail Reference Plan for concrete color and finish.
3. See Material and Detail Reference Plan for tooled control joint and expansion joint locations.
4. See Civil Drawings for grading and drainage design and information.

1 CONCRETE PAVEMENT
NOT TO SCALE

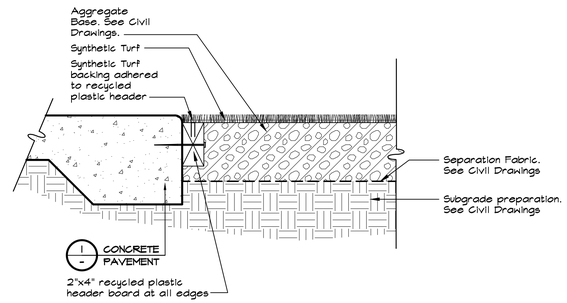

2 SYNTHETIC TURF
NOT TO SCALE

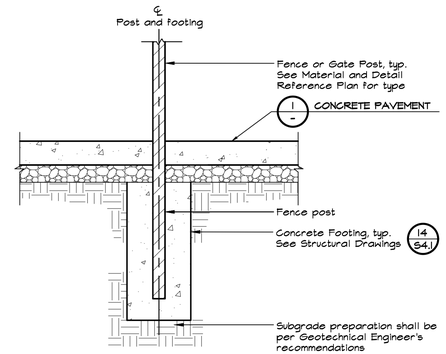

NOTES:

1. See Concrete Notes on the Material and Detail Reference Plan.
2. See Structural Drawings for fence footing design.
3. See General Fencing and Gate Notes and Schedules on Sheet L1.3.

3 POST AT CONCRETE PAVEMENT
NOT TO SCALE

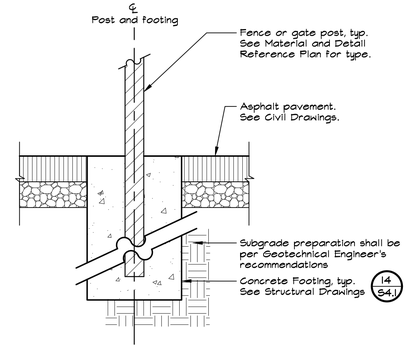

NOTES:

1. See Concrete Notes on the Material and Detail Reference Plan.
2. See Structural Drawings for fence footing design.
3. See General Fencing and Gate Notes and Schedules on Sheet L1.3.

4 POST AT ASPHALT PAVEMENT
NOT TO SCALE

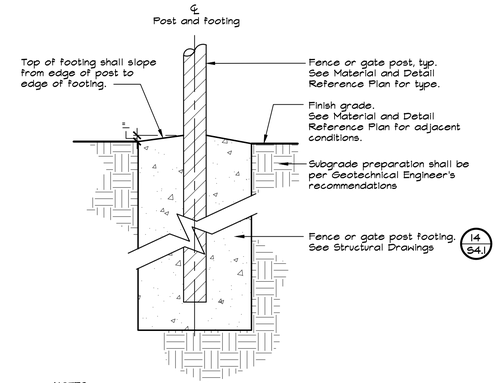

NOTES:

1. See Concrete Notes on the Material and Detail Reference Plan.
2. See Structural Drawings for fence footing design.
3. See General Fencing and Gate Notes and Schedules on Sheet L1.3.

5 POST AT FINISH GRADE
NOT TO SCALE

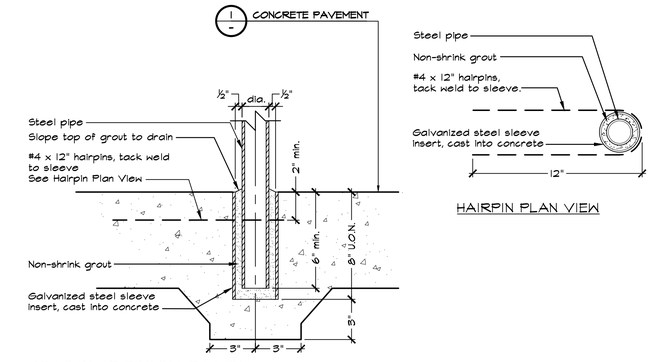

NOTE:

1. See Details 7, 8 and 9 on this Sheet for location of sleeve placement.

6 RAILING FOOTING
NOT TO SCALE

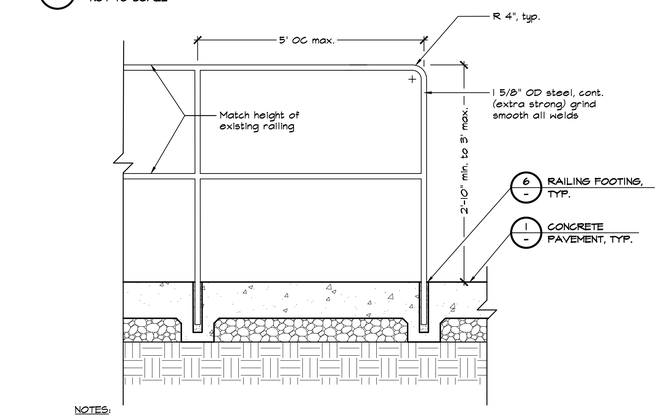

NOTES:

1. Prior to fabrication, Contractor shall visit site, confirm railing components, sizing and fit, and provide shop drawings of railing, including all hardware, structural components and attachments.
2. All welding shall be done in accordance with the latest AWS standards and all welds shall develop full strength of component parts. All exposed ends shall be boxed and welded completely. All joints shall be completely fillet welded and ground smooth.
3. Railing posts shall be plumb and horizontal rails shall be uniform height.
4. All steel members shall be A-500, Grade B, Fy=46ksi min. carbon steel.
5. All metal surfaces shall be powder coated "Freedom Purple". Prior to powder coating, Contractor shall submit color samples to Architect for approval. Finish shall be smooth and even.
6. Contractor shall provide the Architect with 1 pint of touch up paint matching the powder coating selected for the railing.
7. Architect shall review and approve handrails in place prior to grouting.
8. See Material and Detail Reference Plan for guard rail locations. Weld horizontal rails to existing railing post and guard rail post.

7 RAILING
NOT TO SCALE

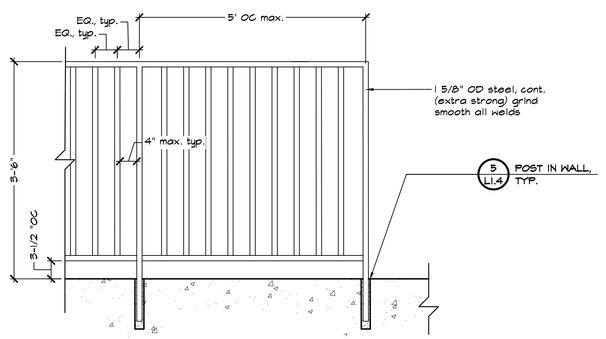

NOTES:

1. Prior to fabrication, Contractor shall visit site, confirm guard rail components, sizing and fit, and provide shop drawings of guard rails, including all hardware, structural components and attachments.
2. All welding shall be done in accordance with the latest AWS standards and all welds shall develop full strength of component parts. All exposed ends shall be boxed and welded completely. All joints shall be completely fillet welded and ground smooth.
3. Guard rail posts shall be plumb and horizontal rails shall be uniform height.
4. All steel members shall be A-500, Grade B, Fy=46ksi min. carbon steel.
5. All metal surfaces shall be powder coated "Freedom Purple". Prior to powder coating, Contractor shall submit color samples to Architect for approval. Finish shall be smooth and even.
6. Contractor shall provide the Architect with 1 pint of touch up paint matching the powder coating selected for the guard rail.
7. Architect shall review and approve guard rail in place prior to grouting.
8. See Material and Detail Reference Plan for guard rail locations. Horizontal rails shall have a radius to match wall where shown on plan.

8 GUARD RAIL
NOT TO SCALE

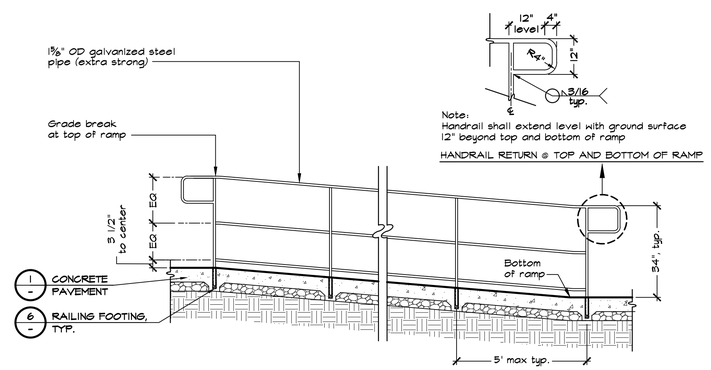

NOTES:

1. Handrail shall be manufactured from steel pipe, and then hot-dipped galvanized. All joints shall be fully welded and sanded smooth before hot-dipping the handrail.
2. District shall review and approve handrail in place prior to grouting.
3. See Material and Detail Reference Plans for handrail locations.

9 RAMP HANDRAIL
NOT TO SCALE

QUATTROCCHI KWOK ARCHITECTS
Main Office:
636 Fifth Street, Santa Rosa, CA 95404
Pleasanton Office:
600 Main Street, Suite E,
Pleasanton, CA 94566
(707) 576-0829

GSM landscape architects, inc.
1700 Soscol Ave. Suite 23
Napa, CA 94559
707-255-4630
www.gsmlainc.com

REGISTERED LANDSCAPE ARCHITECT
STEPHEN STRANZ
No. 2790
Exp. 10-31-20
STATE OF CALIFORNIA

FREEDOM HIGH SCHOOL

PERFORMING ARTS AND CTE FACILITIES

1050 Neroly Rd
Oakley, CA 94561

Liberty Union High School District

ARCH PROJECT NO:	1739.00
DRAWN BY:	JMH/HDJ
DRAWING SCALE:	AS SHOWN
PTN:	61721-0068

BID SET

AUGUST 13, 2019

SHEET TITLE

CONSTRUCTION DETAILS

SHEET NUMBER

L1.1

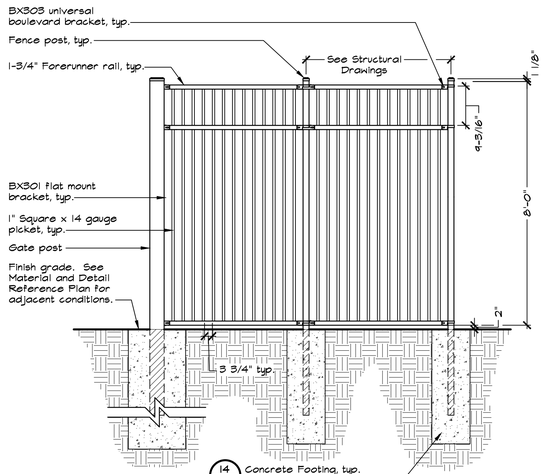

NOTES:

1. See General Fencing and Gate Notes and Schedules on Sheet L1.3.
2. See Material and Detail Reference Plan and Layout Plan for post locations.
3. See Structural Drawings for post and footing information.
4. Fence shall be Aegis II Majestic and 3-3/4" picket gap, manufactured by Ameristar, or approved equal. Contact Ed Carini, (510) 552-8605 / (888) 333-3422.
5. Fence shall be black in color to match Ameristar standard black finish.
6. Contractor shall provide 1 gallon of touch up paint from Manufacturer to match black color.

1 8' HIGH FENCE, ORNAMENTAL
NOT TO SCALE

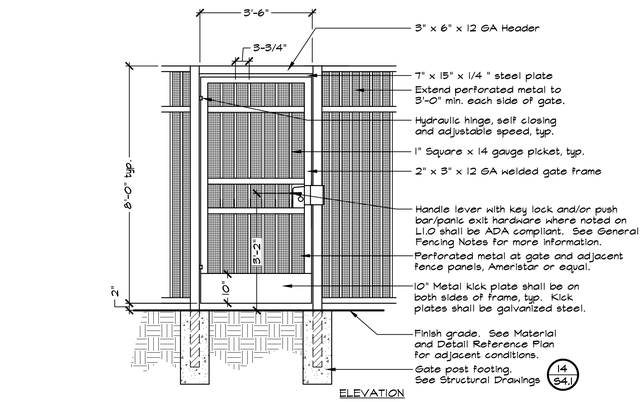

NOTES:

1. See General Fencing and Gate Notes and Schedules on Sheet L1.3.
2. See Material and Detail Reference Plan and Layout Plan for post locations.
3. See Structural Drawings for post and footing information.
4. Gate shall be Aegis II Majestic with 3-3/4" picket gap, manufactured by Ameristar, or approved equal. Contact Ed Carini, (510) 552-8605 / (888) 333-3422.
5. Contractor shall provide 1 gallon of touch up paint from Manufacturer to match black color.
6. Door opening shall provide clear width of 32 inches minimum, CBC 11B-404.2.3.
7. Gate shall be black in color to match Ameristar standard black finish.
8. Contractor shall provide 1 gallon of touch up paint from Manufacturer to match black color.

2 8' HIGH SINGLE GATE, ORNAMENTAL
NOT TO SCALE

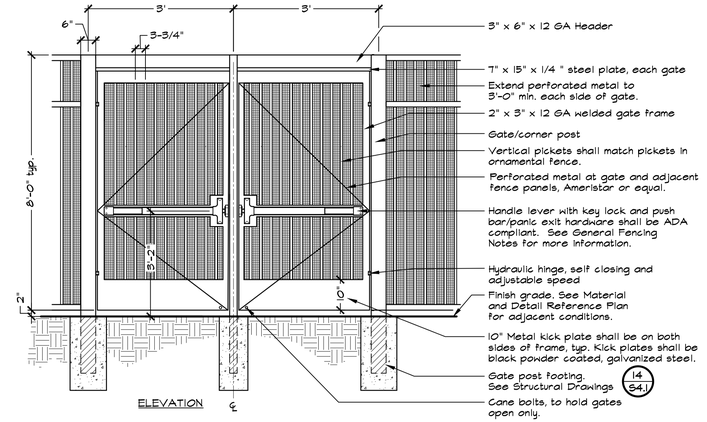

NOTES:

1. Gate shall be Aegis II Majestic with 3-3/4" picket gap, manufactured by Ameristar, or approved equal. Contact Ed Carini, (510) 552-8605 / (888) 333-3422.
2. See General Fencing and Gate Notes and Schedules on Sheet L1.3.
3. See Material and Detail Reference Plan and Layout Plan for post locations.
4. See Structural Drawings for post and footing information.
5. Space pickets to allow full 180° opening.
6. Door opening shall provide clear width of 32 inches minimum, CBC 11B-404.2.3
7. Gate shall be black in color to match Ameristar standard black finish.
8. Contractor shall provide 1 gallon of touch up paint from Manufacturer to match black color.

3 8' HIGH DOUBLE GATE, ORNAMENTAL
NOT TO SCALE

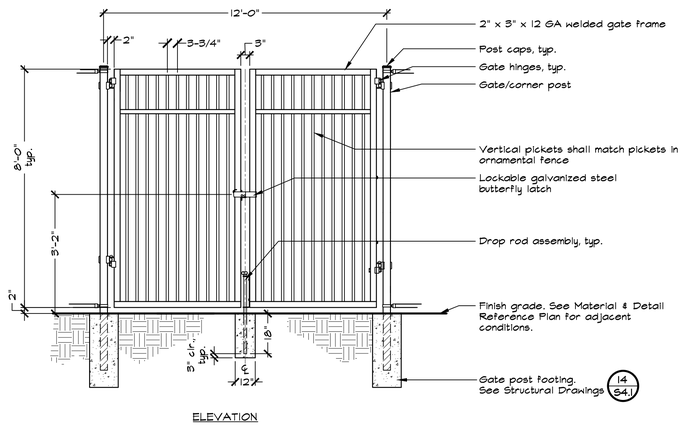

NOTES:

1. See General Fencing and Gate Notes and Schedules on Sheet L1.3.
2. See Material and Detail Reference Plan and Layout Plan for post locations.
3. See Structural Drawings for post and footing information.
4. Gate shall be Aegis II Majestic with 3-3/4" picket gap, manufactured by Ameristar, or approved equal. Contact Ed Carini, (510) 552-8605 / (888) 333-3422.
5. Gate shall be black in color to match Ameristar standard black finish.
6. Contractor shall provide 1 gallon of touch up paint from Manufacturer to match black color.

4 8' HIGH DOUBLE MAINTENANCE GATE, ORNAMENTAL
NOT TO SCALE

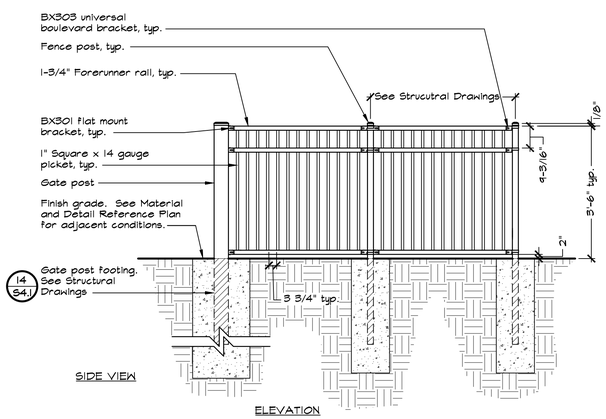

NOTES:

1. See General Fencing and Gate Notes and Schedules on Sheet L1.3.
2. Fence shall be Aegis II Majestic and 3-3/4" picket gap, manufactured by Ameristar, or approved equal. Contact Ed Carini, (510) 552-8605 / (888) 333-3422.
3. See Material and Detail Reference Plan and Layout Plan for post locations.
4. See Structural Drawings for post and footing information.
5. Gate shall be black in color to match Ameristar standard black finish.
6. Contractor shall provide 1 gallon of touch up paint from Manufacturer to match black color.

5 3'-6" HIGH FENCE, ORNAMENTAL
NOT TO SCALE

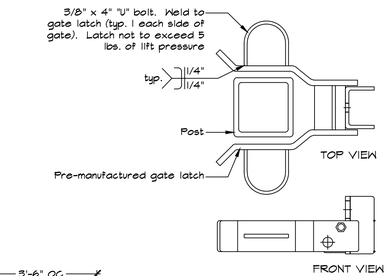

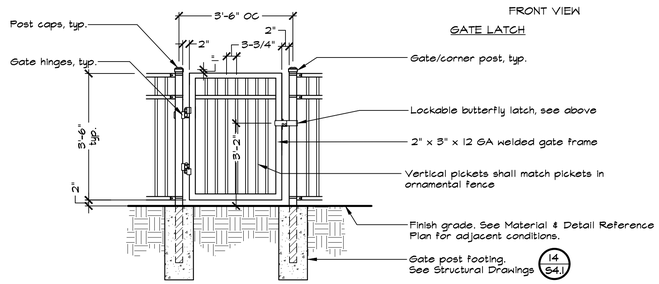

NOTES:

1. See General Fencing and Gate Notes and Schedules on Sheet L1.3.
2. See Material and Detail Reference Plan and Layout Plan for gate post locations.
3. See Structual Drawings for post and footing information.
4. Gate shall be Aegis II Majestic with 3-3/4" picket gap, manufactured by Ameristar, or approved equal. Contact Ed Carini, (510) 552-8605 / (888) 333-3422.
5. Gate shall be black in color to match Ameristar standard black finish.
6. Contractor shall provide 1 gallon of touch up paint from Manufacturer to match black color.

6 3'-6" HIGH SINGLE MAINTENANCE GATE, ORNAMENTAL
NOT TO SCALE

QUATTROCCHI KWOK ARCHITECTS
Main Office:
636 Fifth Street, Santa Rosa, CA 95404
Pleasanton Office:
600 Main Street, Suite E,
Pleasanton, CA 94566
(707) 576-0829

GSM landscape architects, inc.
1700 Soscol Ave. Suite 23
Napa, CA 94559
707-255-4630
www.gsmlainc.com

REGISTERED LANDSCAPE ARCHITECT
STEPHEN STRANZL
No. 2790
Exp. 10-31-20
STATE OF CALIFORNIA

FREEDOM HIGH SCHOOL

PERFORMING ARTS AND CTE FACILITIES

1050 Neroly Rd
Oakley, CA 94561

Liberty Union High School District

ARCH PROJECT NO:		1739.00
DRAWN BY:		JMH/HDJ
DRAWING SCALE:		AS SHOWN
PTN:		61721-0068

BID SET

AUGUST 13, 2019

SHEET TITLE

CONSTRUCTION DETAILS

SHEET NUMBER

L1.2

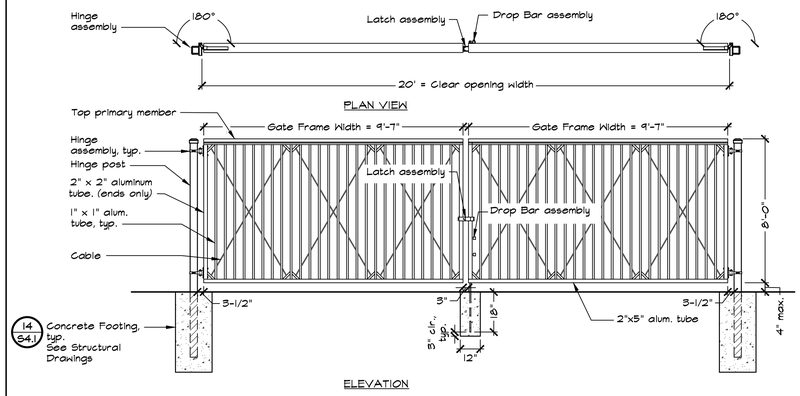

NOTES:

1. Gate shall be Double Heavy Duty Swing Gate with 180-degree hinges, manufactured by Tymetal Corp. (800) 328-4283, or approved equal.
2. See Material and Detail Reference Plan and Layout Plan for gate post locations.
3. See General Fencing and Gate Notes and Schedules on this sheet.
4. All tubular aluminum elements shall have a minimum 1/4" wall thickness.
5. See Structural Drawings for post and footing information.
6. Gate shall be black in color to match Ameristar standard black finish.
7. Contractor shall provide 1 gallon of touch up paint from Manufacturer to match black color.

1 8' HIGH DOUBLE GATE, HEAVY DUTY ORNAMENTAL

NOT TO SCALE

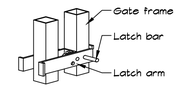

LATCH ASSEMBLY

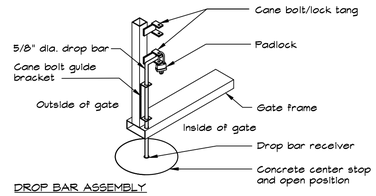

DROP BAR ASSEMBLY

NOTES:

1. Provide all hardware required.
2. Contractor shall field drill hole for drop bar.

GENERAL FENCING AND GATE NOTES AND SCHEDULES

1. Details are for general reference. Contractor shall provide shop drawings prior to construction for approval by the District. Contractor shall include all hardware types and manufacturers' information within shop drawings.
2. (P) Designated gates shown on L1.0 shall be accessible, have push bar and lockable lever with cylinder dogging, push pad armor, push bar with trim, keep holes and keyed lever; all in stainless steel finish. Von Duprin, or equal, product number; CD x AX x PA x 98L x KH x 996L-NL x 630. Lock shall have an interchangeable large format lock, cylinder dogging and night latch feature. Schlage Lock product number: 20-057 IC rim cylinder (996L) and 20-061 x XAII-948 630 (CD). Contact Debbie White at Allegion for ordering information. (925) 463-7102, Debbie.White@allegion.com.
3. (A) Designated gates shown on L1.0 shall be accessible and have levers with Vandlgard Classroom Locks in satin chrome finish. Schlage, or equal, product number; ND95JD RHO 626 with interchangeable format lock. Schlage lock product number: 23-030. Contact Debbie White at Allegion for ordering information. (925) 463-7102, debbie.white@allegion.com.
4. Chain link fabric shall be black vinyl, 9 gauge, 2" mesh. See Material and Detail Reference Plan for locations. All posts, hardware, and rails finish shall match fabric.
5. All gate hinge hardware shall be commercial/industrial quality.
6. See Concrete Notes on Sheet L1.0.
7. See Structural Drawings for post and footing information.
8. Subgrade preparation shall be per Geotechnical Engineer's recommendations.

Gate Schedule						
Description	3'-6" High x 3'-6" Wide	Accessible, 8' High x 3'-6" Wide	Accessible, 8' High x 6' Wide	8' High x 10' Wide	8' High x 12' Wide	8' High x 20' Clear
Detail Reference	6 / L1.2	2 / L1.2	3 / L1.2	4 / -	4 / L1.2	1 / -
Gate Post	See Structural Drawings #14, S4.1	See Structural Drawings #14, S4.1	See Structural Drawings #14, S4.1	See Structural Drawings #14, S4.1	See Structural Drawings #14, S4.1	See Structural Drawings #14, S4.1
Gate Frame	2" x 3" x 12 GA	2" x 3" x 12 GA	2" x 3" x 12 GA	2-3/8" OD (STD. SCH 40 Pipe)	2" x 3" x 12 GA	By Manufacturer
Footing Size	See Structural Drawings #14, S4.1	See Structural Drawings #14, S4.1	See Structural Drawings #14, S4.1	See Structural Drawings #14, S4.1	See Structural Drawings #14, S4.1	See Structural Drawings #14, S4.1

Fence Schedule			
Description	3-6' High Ornamental Fence	8' High Ornamental Fence	8' High Black Vinyl Chain Link Fence
Detail Reference	5 / L1.2	1 / L1.2	3 / -
Line Post	See Structural Drawings #14, S4.1	See Structural Drawings #14, S4.1	See Structural Drawings #14, S4.1
Corner/ End Post	See Structural Drawings #14, S4.1	See Structural Drawings #14, S4.1	See Structural Drawings #14, S4.1
Footing Size	See Structural Drawings #14, S4.1	See Structural Drawings #14, S4.1	See Structural Drawings #14, S4.1

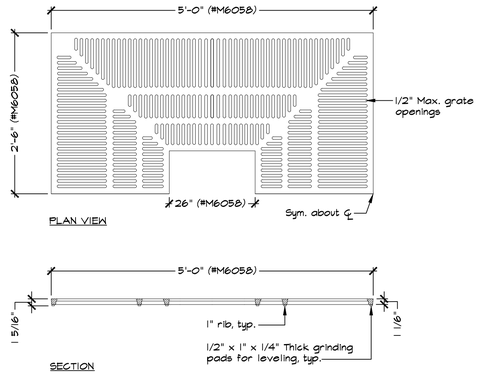

NOTES:

1. 5' Tree Grate shall be IronSmith, ADA, Model #M6058, or approved equal. Contact is Richard Hilton, (775) 787-9545.
2. Tree grate finish shall be zinc metalized.

2 TREE GRATE

NOT TO SCALE

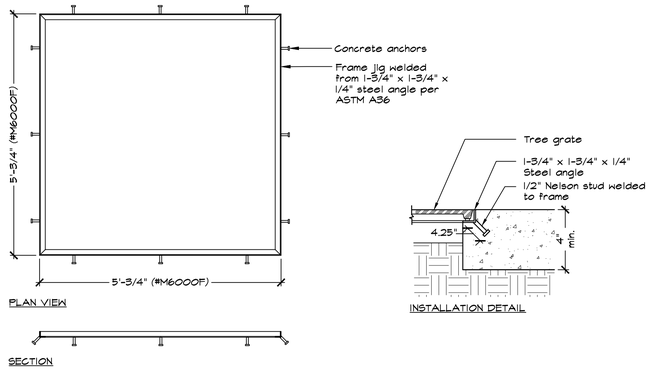

NOTES:

1. 5' Tree Grate Frame shall be IronSmith, Model #M6000F, or approved equal. Contact is Richard Hilton, (775) 787-9545.
2. Frame shall be hot dipped galvanized.

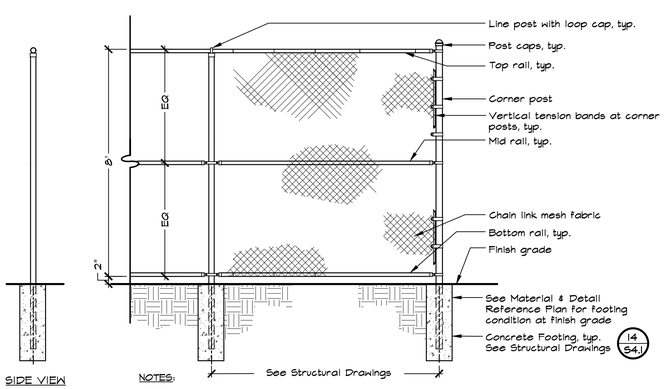

NOTES:

1. See General Fencing and Gate Notes and Schedules on Sheet L1.3.
2. See Material and Detail Reference Plan and Layout Plan for post locations.
3. See Structural Drawings for post and footing information.

3 8' HIGH FENCE, CHAIN LINK

NOT TO SCALE

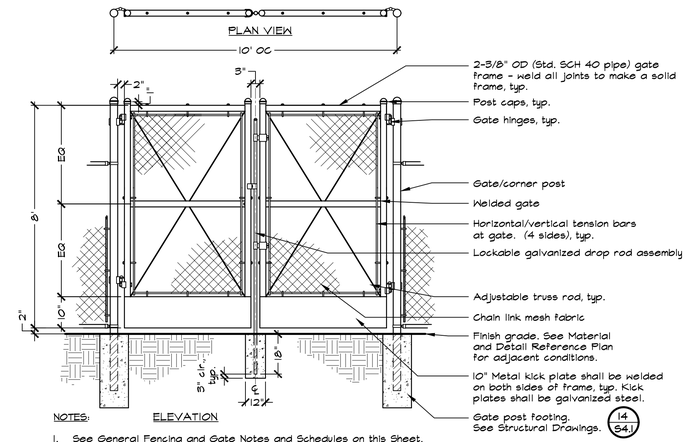

NOTES:

1. See General Fencing and Gate Notes and Schedules on this Sheet.
2. See Material and Detail Reference Plan and Layout Plan for post locations.
3. See Structural Drawings for post and footing information.

4 8' HIGH DOUBLE MAINTENANCE GATE, CHAIN LINK

NOT TO SCALE

QUATTROCCHI KWOK ARCHITECTS
Main Office:
636 Fifth Street, Santa Rosa, CA 95404
Pleasanton Office:
600 Main Street, Suite E,
Pleasanton, CA 94566
(707) 576-0829

GSM landscape architects, inc.
1700 Soscol Ave. Suite 23
Napa, CA 94559
707-255-4630
www.gsmlainc.com

REGISTERED LANDSCAPE ARCHITECT — KATHLEEN STRANZ — No. 2790 — Exp. 10-31-20 — STATE OF CALIFORNIA

FREEDOM HIGH SCHOOL

PERFORMING ARTS AND CTE FACILITIES

1050 Neroly Rd
Oakley, CA 94561

Liberty Union High School District

ARCH PROJECT NO:	1739.00
DRAWN BY:	JMH/HDJ
DRAWING SCALE:	AS SHOWN
PTN:	61721-0068

BID SET

AUGUST 13, 2019

SHEET TITLE

CONSTRUCTION DETAILS

SHEET NUMBER

L1.3

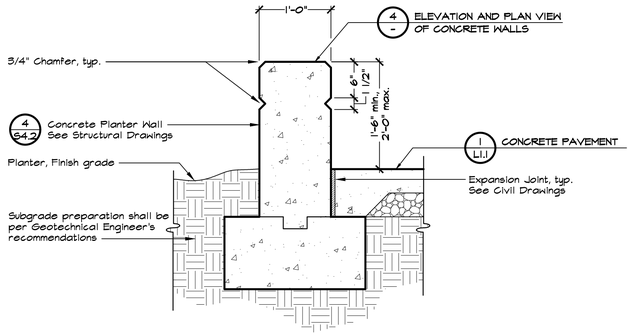

NOTES:

1. See Concrete Notes on the Material and Detail Reference Plan.
2. See Civil Drawings for detailed grading and drainage plans.
3. Hold top of wall level unless otherwise noted on Civil Drawings.
4. Wall finish shall be smooth sack finish on all surfaces and edges.
5. See Structural Drawings for detailed wall, reinforcement and weephole/wall design.

1 CONCRETE PLANTER WALL - TYPE 1
NOT TO SCALE

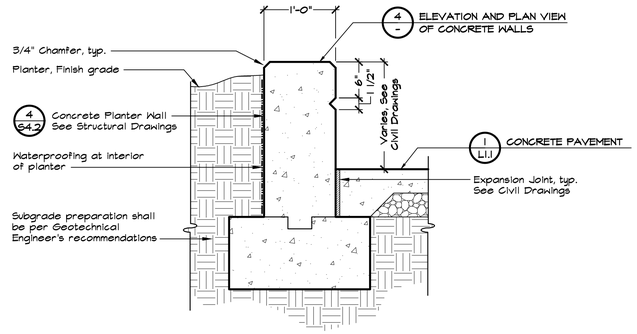

NOTES:

1. See Concrete Notes on the Material and Detail Reference Plan.
2. See Civil Drawings for detailed grading and drainage plans.
3. Hold top of wall level unless otherwise noted on Civil Drawings.
4. Wall finish shall be smooth sack finish on all surfaces and edges.
5. See Structural Drawings for detailed wall, reinforcement and weephole/wall design.

2 CONCRETE PLANTER WALL - TYPE 2
NOT TO SCALE

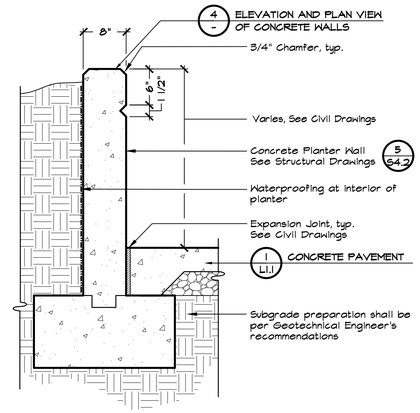

Notes:

1. See Concrete Notes on the Material and Detail Reference Plan.
2. See Civil Drawings for detailed grading and drainage plans.
3. Hold top of wall level unless otherwise noted on the Civil Drawings.
4. Wall finish shall be smooth sack finish on all surfaces and edges.
5. See Structural Drawings for detailed wall, reinforcement and weephole/wall design.

3 CONCRETE PLANTER WALL - TYPE 3
NOT TO SCALE

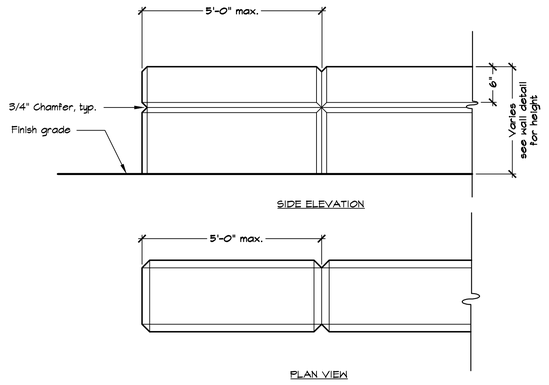

4 ELEVATION AND PLAN VIEW OF CONCRETE WALLS
NOT TO SCALE

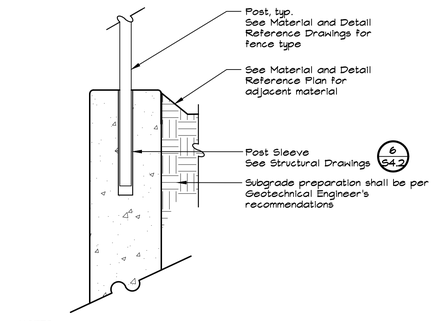

NOTES:

1. See Concrete Notes on the Material and Detail Reference Plan.
2. See Structural Drawings for fence footing.
3. See General Fencing and Gate Notes and Schedules on Sheet L1.3.

5 POST IN WALL
NOT TO SCALE

QUATTROCCHI KWOK ARCHITECTS
Main Office:
636 Fifth Street, Santa Rosa, CA 95404
Pleasanton Office:
600 Main Street, Suite E,
Pleasanton, CA 94566
(707) 576-0829

GSM landscape architects, inc.
1700 Soscol Ave. Suite 23
Napa, CA 94559
707-255-4630
www.gsmlainc.com

REGISTERED LANDSCAPE ARCHITECT
STEPHEN STRANZ
No. 2790
Exp. 10-31-20
STATE OF CALIFORNIA

FREEDOM HIGH SCHOOL

PERFORMING ARTS AND CTE FACILITIES

1050 Neroly Rd
Oakley, CA 94561

Liberty Union High School District

ARCH PROJECT NO: 1739.00
DRAWN BY: JMH/HDJ
DRAWING SCALE: AS SHOWN
PTN: 61721-0068

BID SET

AUGUST 13, 2019

SHEET TITLE

CONSTRUCTION DETAILS

SHEET NUMBER

L1.4

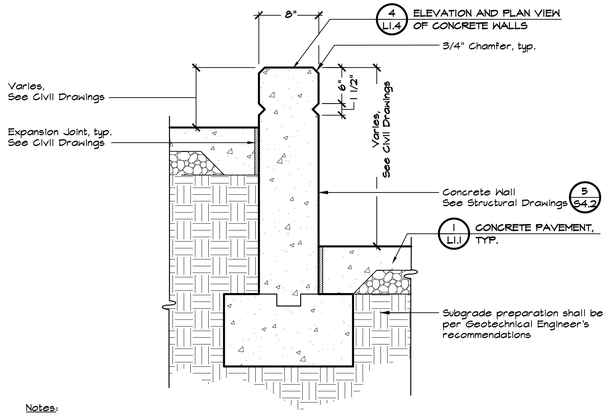

Notes:

1. See Concrete Notes on the Material and Detail Reference Plan.
2. See Civil Drawings for detailed grading and drainage plans.
3. Hold top of wall level unless otherwise noted on the Civil Drawings.
4. Wall finish shall be smooth sack finish on all surfaces and edges.
5. See Structural Drawings for detailed wall, reinforcment and weephole/wall design.

1 CONCRETE WALL - TYPE 1
NOT TO SCALE

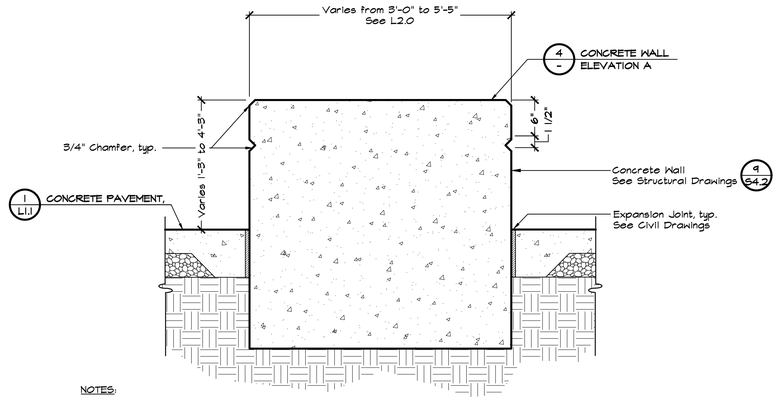

NOTES:

1. See Concrete Notes on the Material and Detail Reference Plan.
2. See Civil Drawings for detailed grading and drainage plans.
3. Wall finish shall be smooth sack finish on all surfaces and edges.
4. See Structural Drawings for reinforcement and footing design.

2 CONCRETE WALL - TYPE 2
NOT TO SCALE

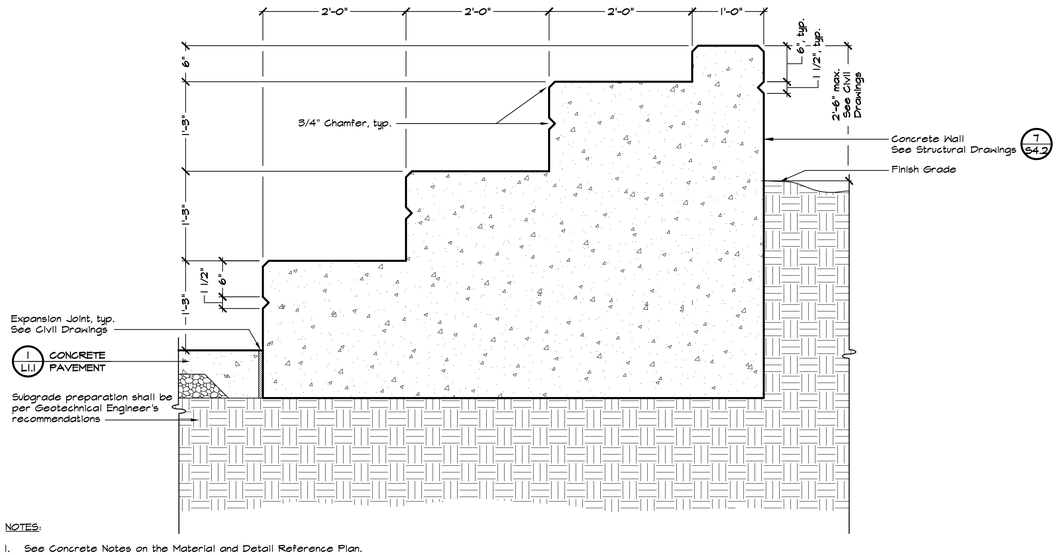

NOTES:

1. See Concrete Notes on the Material and Detail Reference Plan.
2. See Civil Drawings for detailed grading and drainage plans.
3. Hold top of wall level unless otherwise noted on Civil Drawings.
4. Wall finish shall be smooth sack finish on all surfaces and edges.
5. See Structural Drawings for reinforcement and footing design.

3 CONCRETE WALL - TYPE 3
NOT TO SCALE

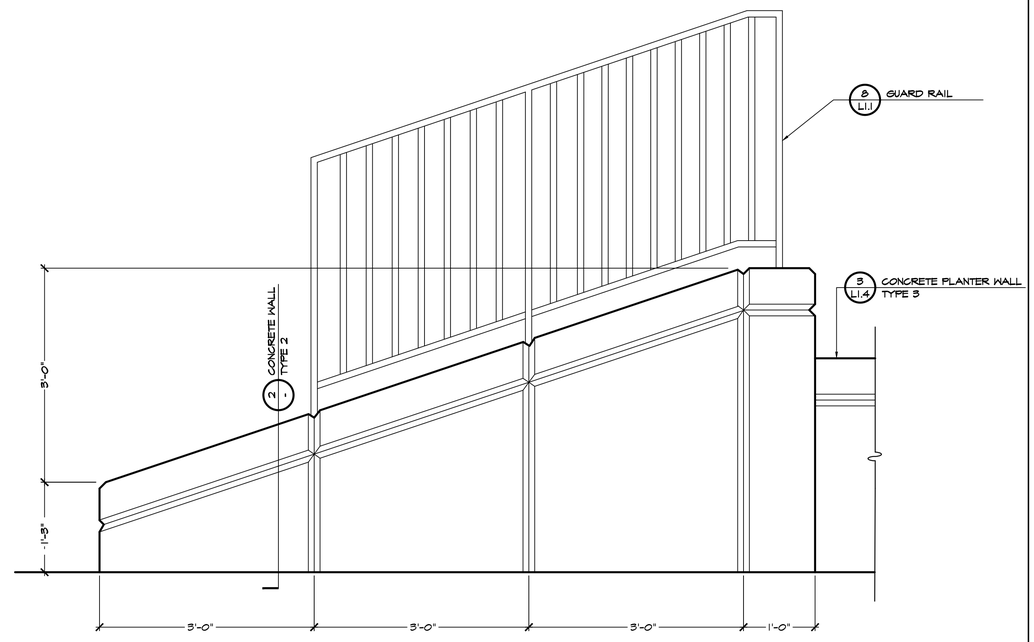

NOTES:

1. See Concrete Notes on the Material and Detail Reference Plan.
2. See Civil Drawings for detailed grading and drainage plans.
3. Hold top of wall level unless otherwise noted on Civil Drawings.
4. Wall finish shall be smooth sack finish on all surfaces and edges.
5. See Structural Drawings for reinforcement and footing design.

4 CONCRETE WALL ELEVATION A
NOT TO SCALE

QUATTROCCHI KWOK ARCHITECTS
Main Office:
636 Fifth Street, Santa Rosa, CA 95404
Pleasanton Office:
600 Main Street, Suite E,
Pleasanton, CA 94566
(707) 576-0829

GSM landscape architects, inc.
1700 Soscol Ave. Suite 23
Napa, CA 94559
707-255-4630
www.gsmlainc.com

REGISTERED LANDSCAPE ARCHITECT STEPHEN STRANZ No. 2790 Exp. 10-31-20 STATE OF CALIFORNIA

FREEDOM HIGH SCHOOL

PERFORMING ARTS AND CTE FACILITIES

1050 Neroly Rd
Oakley, CA 94561

Liberty Union High School District

ARCH PROJECT NO:	1739.00
DRAWN BY:	JMH/HDJ
DRAWING SCALE:	AS SHOWN
PTN:	61721-0068

BID SET

AUGUST 13, 2019

SHEET TITLE

CONSTRUCTION DETAILS

SHEET NUMBER

L1.5

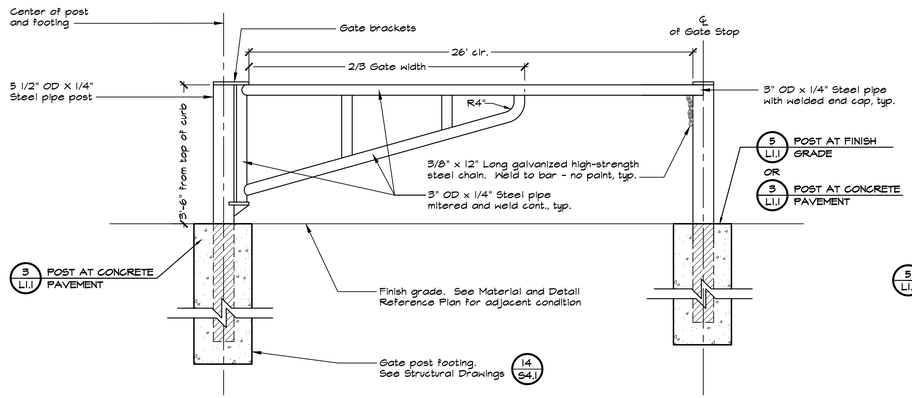

NOTES:

1. Detail is for general reference only. Contractor shall provide shop drawings prior to construction for review and approval by the District.
2. All welds shall be 3/16" fillet weld, unless otherwise noted.
3. All parts shall be powder coated with Tiger Drylac color 39/20020 - safety yellow, unless otherwise noted. Contractor shall submit samples for review and approval by the District.
4. Gate posts shall be plumb and pipe gate level on both sides of roadway.
5. See Civil Drawings for grading and drainage design and information.
6. District shall provide padlock.

1 PIPE GATE

NOT TO SCALE

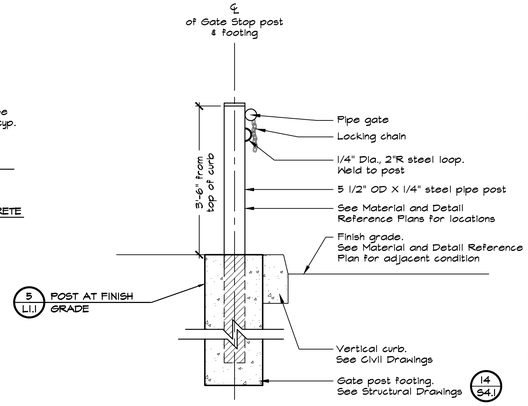

GATE STOP

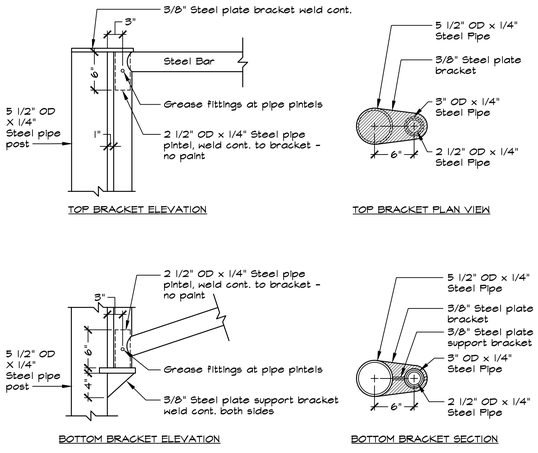

GATE BRACKETS

QUATTROCCHI KWOK ARCHITECTS
Main Office:
636 Fifth Street, Santa Rosa, CA 95404
Pleasanton Office:
600 Main Street, Suite E,
Pleasanton, CA 94566
(707) 576-0829

GSM landscape architects, inc.
1700 Soscol Ave. Suite 23
Napa, CA 94559
707-255-4630
www.gsmlainc.com

REGISTERED LANDSCAPE ARCHITECT STEPHEN STRANZ No. 2790 Exp. 10-31-20 STATE OF CALIFORNIA

FREEDOM HIGH SCHOOL

PERFORMING ARTS AND CTE FACILITIES

1050 Neroly Rd
Oakley, CA 94561

Liberty Union High School District

ARCH PROJECT NO:	1739.00
DRAWN BY:	JMH/HDJ
DRAWING SCALE:	AS SHOWN
PTN:	61721-0068

BID SET

AUGUST 13, 2019

SHEET TITLE

CONSTRUCTION DETAILS

SHEET NUMBER

L1.6

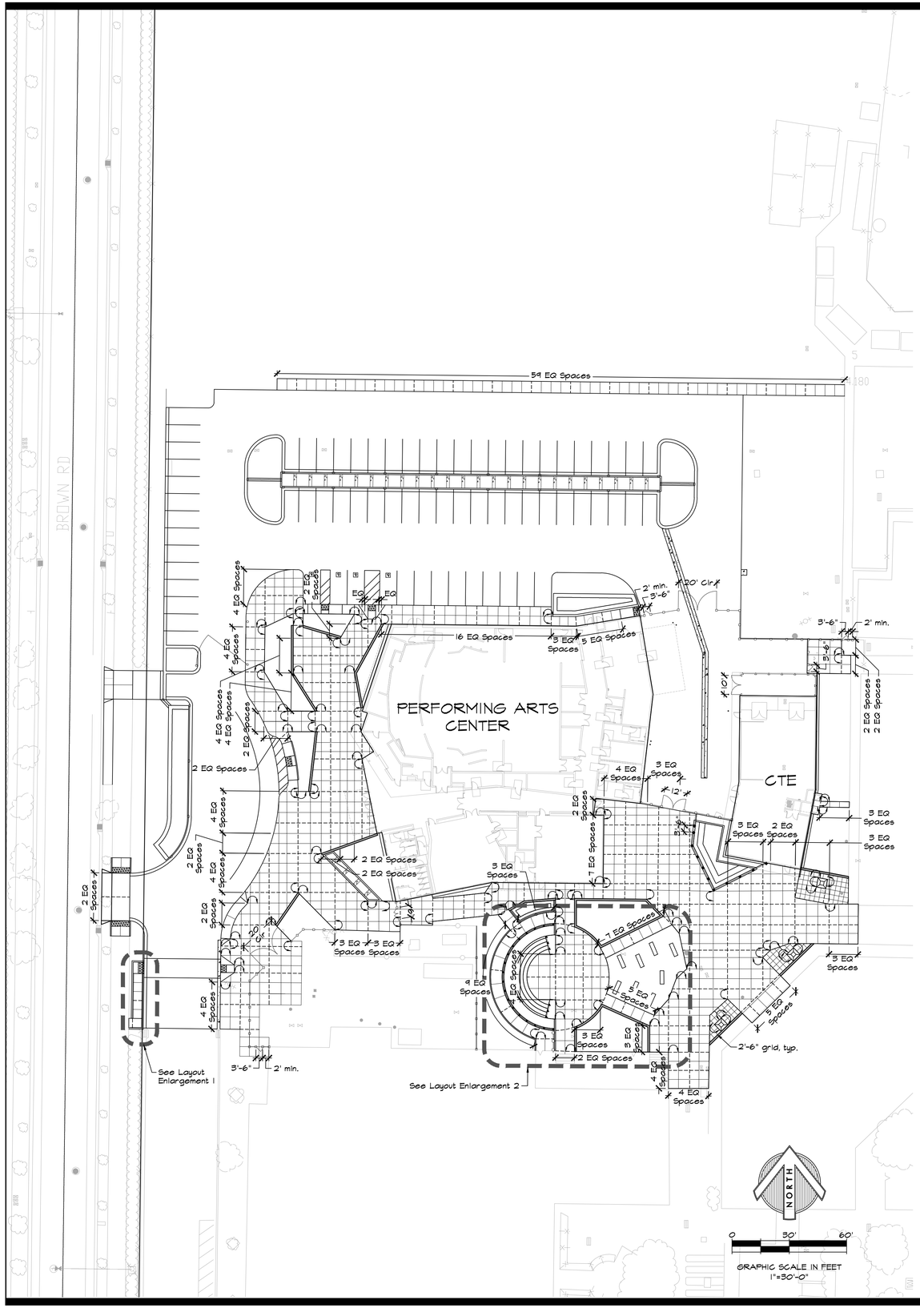

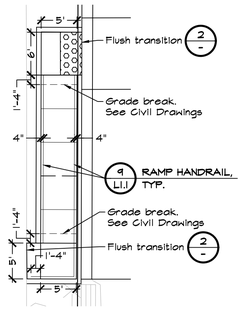

NOTES:

1. See Sheet C-5.3 for grading and sections.

1 LAYOUT ENLARGEMENT 1

SCALE: 1"=10'

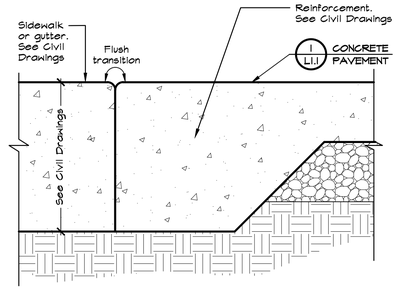

NOTES:

1. Accessible routes shall comply with 11B, Division 4, per CBC 11B-402.2.
2. See Civil Drawings for grading information.

2 FLUSH TRANSITION

NOT TO SCALE

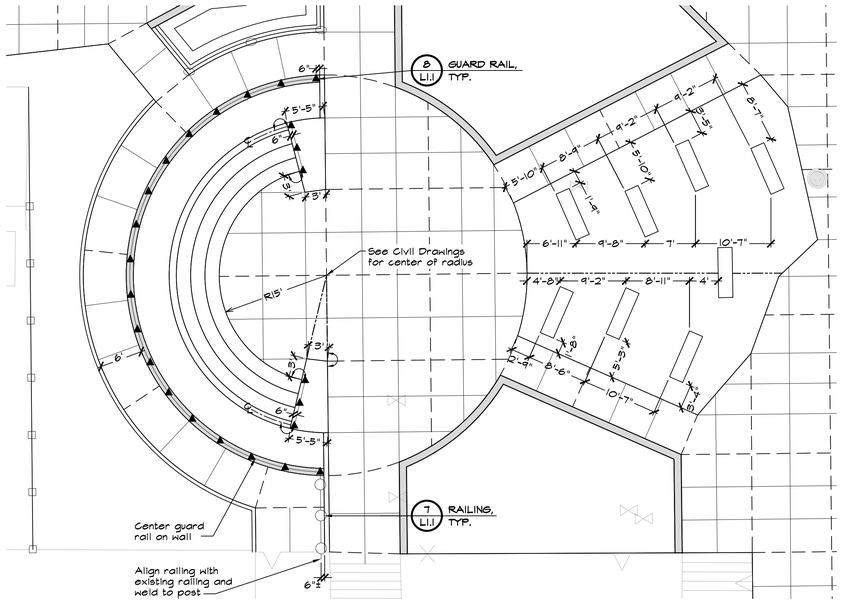

3 LAYOUT ENLARGEMENT 2

SCALE: 1"=10'

LAYOUT LEGEND

RX'-Y"	Radial Dimension	℄	Centerline
X'	Arc Dimension	MA	Midpoint of Arc
		PT	Point of Tangency
X"	Linear Dimension	Clr	Clear Opening
	Align		90 Degree Angle
	Guideline to show alignment		Control Points:
EQ	Equal		

LAYOUT NOTES

1. Contractor shall notify all public or private utility companies two (2) working days prior to commencement of work on this project to verify the locations of existing utility lines. Call Underground Service Alert (U.S.A.) toll free at 1-800-227-2600 or 811, 7:00am to 5:00pm, Monday through Friday.
2. All coordinates and dimensions shown are in a horizontal plane.
3. Written dimensions always take precedence over scaled dimensions. If there is a conflict, notify the Architect and obtain a clarification. No deviation or substitution shall be allowed without obtaining written approval from the Architect.
4. See Civil Drawings for additional layout information.
5. This Plan does not represent a Property Line Survey. Property lines shown hereon may not represent the true position of the line.
6. The Contractor shall coordinate all construction elements including utility locations and required sleeving prior to installation of any underground utilities.
7. The Contractor shall verify critical dimensions, reference and control point locations and construction conditions prior to construction.
8. All dimensions shall be verified in the field, chalked painted, and/or string lined. Any minor adjustments required to achieve overall design layout shall be reviewed and approved by the Architect prior to construction.
9. All materials shall be furnished and installed by the Contractor per Manufacturer's specifications, unless otherwise noted in these Plans or Specifications.
10. Existing features and topographic information have been taken from Survey performed by Carlson, Barbee & Gibson, Inc. on June 14, 2018 provided by Quattrocchi Kwok Architects. GSM landscape architects, inc. assumes no liability, real or alleged, regarding the accuracy of the existing features or topographic information shown.

QUATTROCCHI KWOK ARCHITECTS
Main Office:
636 Fifth Street, Santa Rosa, CA 95404
Pleasanton Office:
600 Main Street, Suite E,
Pleasanton, CA 94566
(707) 576-0829

GSM landscape architects, inc.
1700 Soscol Ave. Suite 23
Napa, CA 94559
707-255-4630
www.gsmlainc.com

REGISTERED LANDSCAPE ARCHITECT
STEPHEN STRANZL
No. 2790
Exp. 10-31-20
STATE OF CALIFORNIA

FREEDOM HIGH SCHOOL

PERFORMING ARTS AND CTE FACILITIES

1050 Neroly Rd
Oakley, CA 94561

Liberty Union High School District

ARCH PROJECT NO:	1739.00
DRAWN BY:	JMH/HDJ
DRAWING SCALE:	AS SHOWN
PTN:	61721-0068

BID SET

AUGUST 13, 2019

SHEET TITLE

LAYOUT PLAN

SHEET NUMBER

L2.0

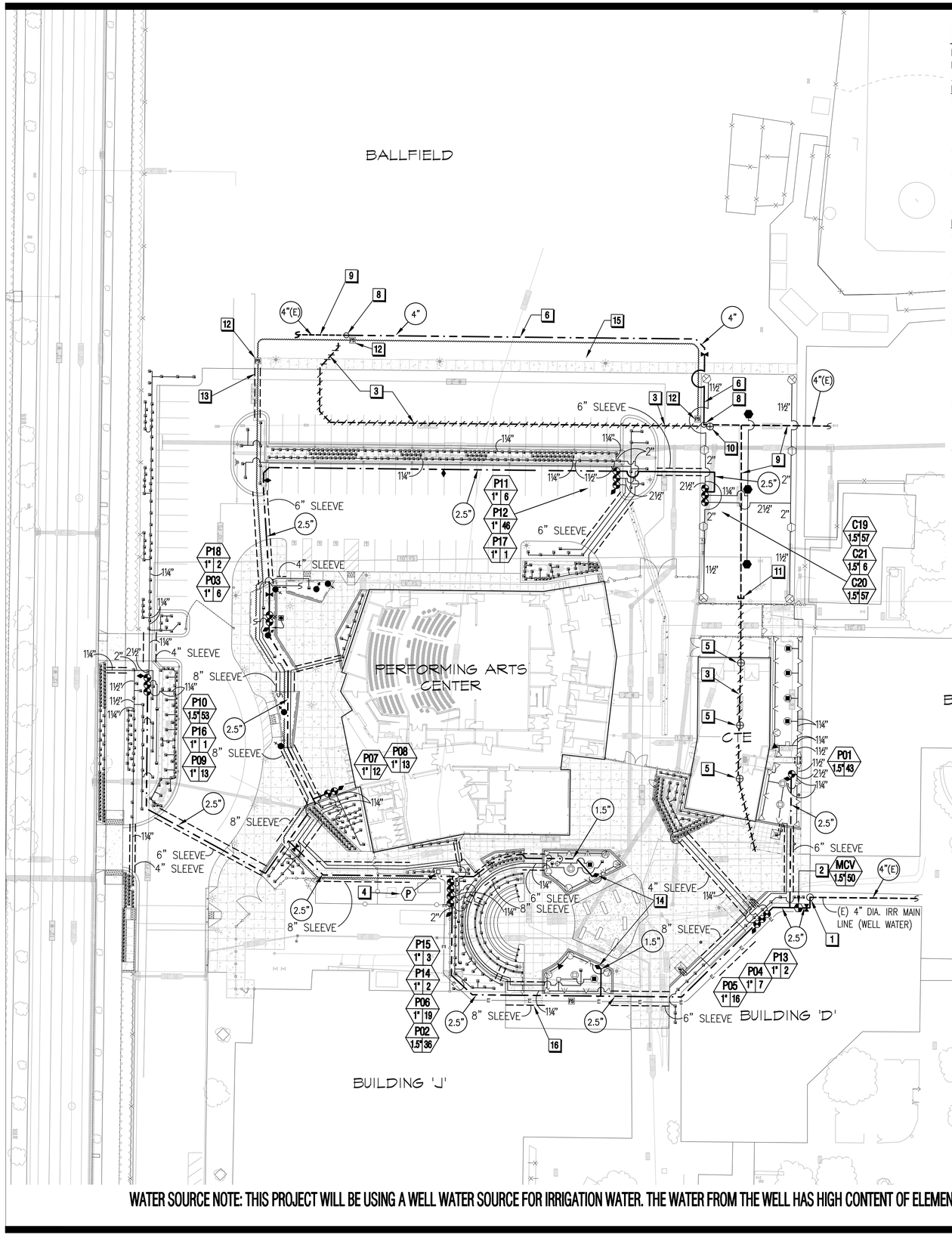

CONSTRUCTION NOTES

FIELD LOCATE ANY (E) CONTROLLERS WITHIN THE CONTRACT WORK AREA. (E) CONTROLLERS LOCATED IN THE WAY OF CONSTRUCTION SHALL BE RELOCATED FROM THE (E) LOCATION TO A (N) DISTRICT SPECIFIED LOCATION AND AS FOLLOWS:

DISASSEMBLY:

- DETERMINE IN THE FIELD, BY ZONE OPERATION, WHICH STATION CONTROL WIRES AT THE (E) CONTROLLERS OPERATE ZONES AROUND SCHOOL BUILDINGS AND MUST BE EXTENDED TO (N) CONTROLLER LOCATION. NOTE AND INVENTORY EACH WIRE'S STATION NUMBER FOR FUTURE CONNECTION AT (N) CONTROLLER LOCATION.
- DISCONNECT ALL LOW VOLTAGE WIRES FROM (E) CONTROLLERS, INCLUDING CONTROLLER COMMUNICATION WIRE, STATION WIRES, MASTER VALVE, AND FLOW SENSOR WIRES.
- SHUT–OFF THE (E) 120 VAC ELECTRICAL TO (E) CONTROLLERS AT THE (E) ELECTRICAL PANEL. DISCONNECT THE (E) 120 VAC ELECTRICAL AT THE (E) CONTROLLERS.
- UNBOLT CONTROLLER PEDESTALS FROM (E) CONCRETE PAD.
- DEMOLISH (E) CONCRETE PAD WHILE SALVAGING ALL (E) CONTROLLER WIRES.

REASSEMBLY:

- INSTALL (N) CONCRETE PEDESTALS AT (N) DISTRICT SPECIFIED LOCATION INCLUDING A (N) CONTROLLER PEDESTAL STEEL MOUNTING KIT, SWEEP ELLS, AND CONDUITS AS DETAILED.
- RE–MOUNT (E) CONTROLLERS TO (N) CONCRETE PADS AT (N) DISTRICT SPECIFIED LOCATION.
- ELECTRICAL CONTRACT WORK SHALL CONSTRUCT AND RELOCATE 120 VAC/15 AMP ELECTRICAL SOURCE TO (N) CONTROLLER LOCATION.
- CONNECT 120 VAC ELECTRICAL TO CONTROLLERS.
- CONTROL WIRE: SPLICE TO (E) CONTROL WIRES WITH (N) WIRE AND EXTEND/REROUTE TO RELOCATED (E) CONTROLLER LOCATION(S) AS REQUIRED. USE THE STATION INFORMATION RECORDED DURING DISASSEMBLY (BY ZONE OPERATION WHICH STATION CONTROL WIRES OPERATE ZONES AT CAMPUS OR FIELDS) AND RECONNECT CONTROL WIRE TO DESIGNATED STATIONS. KEEP STATION NUMBERS AT ZONES AS THEY WERE NUMBERED PREVIOUSLY.
- SPLICE TO (E) COMMUNICATION WIRE, MASTER VALVE WIRES, AND FLOW SENSOR CABLE WITH (N) WIRE AND EXTEND/REROUTE/CONNECT COMMUNICATION WIRE, MASTER VALVE WIRES, AND FLOW SENSOR CABLE TO THE (E) RELOCATED CONTROLLERS AS PREVIOUSLY WIRED, IF REQUIRED.

THE (E) IRRIGATION SYSTEM SHALL NOT BE OUT OF SERVICE FOR LONGER THAN 72 HOURS.

SHEET NOTES

1. POINT OF IRRIGATION WATER CONNECTION: CONNECT TO (E) 4" DIA. IRRIGATION PIPING USING WELL WATER FOR IRRIGATION USE ONLY. (E) MAIN LINE DOWNSTREAM OF THIS POINT SHALL BE DEMOLISHED.
2. MASTER VALVE AND FLOW SENSOR: INSTALL PER PLANS AND DETAILS.
3. DEMOLISH (E) MAIN LINE LOCATED UNDER PAVEMENT AREA INCLUDING THE CONTROL WIRE BUNDLE INSTALLED ALONG (E) MAIN LINE PIPE. SEE NOTES 6 AND 12.
4. IRRIGATION CONTROLLER "P" (PEDESTAL MOUNT):
   IRRIGATION CONTRACTOR SHALL PROVIDE AND INSTALL:
   1. CONTROLLER, PEDESTAL MOUNTED AT LOCATION AS DIRECTED BY LUHSD.
   2. THE 120 VAC ELECTRICAL CONNECTIONS TO THE CONTROLLER TERMINALS.
   3. THE RAIN SHUT–OFF DEVICE (ENCLOSURE MOUNTED).
   4. LAMINATED IRRIGATION PLANS AND SCHEDULES AS THE SPECIFICATIONS INDICATE.
   5. GROUNDING OF CONTROLLER.
   6. CONTROLLER HAS TWO–WAY COMMUNICATION TO A DESIGNATED CENTRAL COMPUTER VIA THE INTERNET (CELLULAR PHONE). PROGRAMMING CAN BE DONE IN THE FIELD OR AT ANY COMPUTER WITH INTERNET.
   7. PROGRAM OTHER (E) CONTROLLERS, MASTER VALVES, FLOW SENSORS, AND (E) BOOSTER PUMP TO ALLOW FLOW WHEN THE CONTROLLERS FOR THIS CONTRACT WORK ARE IN OPERATION. THIS MAY REQUIRE COORDINATION WITH THE DISTRICT. CONFIRM IN THE FIELD THAT THE (E) BOOSTER PUMP STATION IS STARTED UNDER A FLOW CONDITION.

   ELECTRICAL CONTRACTOR SHALL PROVIDE AND INSTALL:
   1. THE 120 VAC/15 AMP SERVICE (1 AMP DEMAND) ELECTRICAL SERVICE TO CONTROLLER LOCATION.
   2. THE RIGID STEEL ELECTRICAL CONDUIT, PULL BOXES AND SWEEP ELLS FROM ELECTRICAL SOURCE TO CONTROLLER LOCATION. WIRE TYPE IN CONDUIT TO MATCH THE BUILDING ELECTRICAL SPECIFICATIONS.
5. DEMOLISH (E) RCV
6. INSTALL (N) MAIN LINE AND ROUTE AS SHOWN.
7. (E) MAIN LINE TO REMAIN IN SERVICE, AS–IS.
8. CONNECT (N) MAIN LINE TO (E) MAIN LINE. REFER TO FREEDOM HIGH SCHOOL (N) MAINTENANCE BUILDING IRRIGATION PLAN.
9. (E) MAIN LINE TO REMAIN IN SERVICE
10. DETERMINE IN THE FIELD IF THIS (E) RCV SHALL BE DEMOLISHED DUE TO ALL DOWNSTREAM IRRIGATION BEING DEMOLISHED OR THE (E) RCV SHALL REMAIN IN SERVICE TO (E) IRRIGATION.
11. CAP (E) MAIN LINE AT THIS LOCATION. DUE TO DEMOLITION WORK, THE CONTROL WIRE BUNDLE TO (E) CONTROLLERS MAY BE FOUND HERE. (E) CONTROL WIRES MUST BE RECONNECTED AND/OR REROUTED, PERMANENTLY OR TEMPORARY AS REQUIRED AND UNDER THIS CONTRACT WORK. THE SYSTEM MUST NOT BE OUT OF SERVICE FOR LONGER THAN 72 HOURS.
12. LOCATE BURIED (E) LOW VOLTAGE WIRES FROM CAMPUS OR FIELD AREA REMOTE CONTROL VALVES. INSTALL A PULL BOX, CUT (E) WIRE BUNDLE LOCATED ADJACENT TO (E) MAIN LINE, SPLICE TO (N) WIRES. INSTALL SPLICES INSIDE A PULL BOX. REROUTE (N) LOW VOLTAGE WIRE BUNDLE ALONG (N) MAIN LINE TO EACH PULL BOX AS NEEDED AND TO (E) OR (N) CONTROLLERS. MAKE CONNECTIONS AT CONTROLLER(S) AS REQUIRED. INSTALL WIRE BUNDLES ADJACENT TO (N) MAIN LINE WHERE POSSIBLE.
13. SLEEVE FOR (N) CONTROL WIRE ROUTING
14. QCV FOR SYNTHETIC TURF WASH DOWN
15. FIELD LOCATE AND FLAG THE (E) TURF POP–UP ROTOR OR SPRAY HEADS AND THE ZONE CONTROL VALVE LOCATION. DETERMINE MANUFACTURER AND NOZZLE SIZES. DEMOLISH (E) HEADS AND (E) LATERAL LINE PIPING IN THE AREA OF NEW CONSTRUCTION AS REQUIRED TO ACCOMMODATE THE NEW CONSTRUCTION. FIELD MEASURE AND LAYOUT (N) HEADS TO PROVIDE TRIANGULAR HEAD SPACING, 100% HEAD–TO–HEAD COVERAGE, AND EVEN PRECIPITATION TO THE (E) HEADS TO REMAIN AS–IS. MOVE (E) IRRIGATION HEADS AS REQUIRED TO MAKE THE (N) LAYOUT WORK. NO OVERSPRAY OF WALKS OR PARKING ASPHALT IS ALLOWED. PROVIDE NEW ROTOR HEADS EQUAL TO THE (E) HEADS IN THE LANDSCAPE. OLD PLANS INDICATE TORO 640–36S–43 OR 640–ADS–43. IF DIFFERENT, PROVIDE HEADS EQUAL TO THE HEADS THAT EXIST. DISTRICT CHOICE IS RAIN BIRD FALCON. THE SAME PROCEDURE WILL APPLY/OCCUR FOR (E) POP–UP TURF SPRAY HEADS.
16. INSTALL SLEEVE IN (N) CONSTRUCTION AREA. DO NOT DISTURB EXISTING PAVING OR STEPS.

WATER SOURCE NOTE: THIS PROJECT WILL BE USING A WELL WATER SOURCE FOR IRRIGATION WATER. THE WATER FROM THE WELL HAS HIGH CONTENT OF ELEMENTS WHICH MAKES THE WATER NOT CLASSIFIED AS POTABLE.

DIGALERT 811

JDE
JAMES D. EDDY ASSOCIATES
LANDSCAPE IRRIGATION ENGINEERS
P.O. BOX 2291
DANVILLE, CALIFORNIA 94526
P:(925) 867-3339
EMAIL: JDE@EDDYASSOCIATES.COM
PLANNING–DESIGN–MANAGEMENT
JDE PROJECT NO: 18022

IRRIGATION DESIGNER: James D. Eddy
JAMES D. EDDY ASSOCIATES, DANVILLE, CALIFORNIA
NOTE: NO LICENSE FOR THE LANDSCAPE IRRIGATION SYSTEM DESIGN PROFESSION IS AVAILABLE IN THE STATE OF CALIFORNIA.
MEMBER: AMERICAN SOCIETY OF IRRIGATION CONSULTANTS

QUATTROCCHI KWOK ARCHITECTS
Main Office:
636 Fifth Street, Santa Rosa, CA 95404
Pleasanton Office:
600 Main Street, Suite E.
Pleasanton, CA 94566
(707) 576-0829

GSM landscape architects, inc.
1700 Soscol Ave. Suite 23
Napa, CA 94559
707-255-4630
www.gsmlainc.com

REGISTERED LANDSCAPE ARCHITECT STEPHEN V. STRANZL No. 2790 Exp. 10–31–20 STATE OF CALIFORNIA

FREEDOM HIGH SCHOOL

PERFORMING ARTS AND CTE FACILITIES

1050 Neroly Rd
Oakley, CA 94561

Liberty Union High School District

ARCH PROJECT NO:	1739.00
DRAWN BY:	JMH/HDJ
DRAWING SCALE:	AS SHOWN
PTN:	61721-0068

BID SET

AUGUST 13, 2019

SHEET TITLE

IRRIGATION PLAN

SHEET NUMBER

L3.0

IRRIGATION LEGEND

SYMBOL	NUMBER	DESCRIPTION	PSI	GPM OR GPH	RADIUS (MIN./MAX.)	PRECIP. RATE
4" POP-UP ROTOR HEADS AT TURF						
●	3504-PC-SAM-2.0	RAIN BIRD 3504 SERIES, FULL CIRCLE	45	1.9	22-27	0.59
⊖	F4-PC-SS-18	RAIN BIRD FALCON 6504 SERIES, PART CIRCLE	50	15.4	48-59	0.98
⊖	F4-PC-SS-14	RAIN BIRD FALCON 6504 SERIES, QTR. CIRCLE	50	12.7	48-59	1.60
12" POP-UP SPRAYS AT MOW FREE SOD						
∨ ▽	PROS-12-PRS30-CV-F-R/ 15H,Q	HUNTER 12" POP-UP BODY WITH CHECK VALVE, FLOGUARD TECHNOLOGY, RECYCLED CAP, & HUNTER NOZZLE	30	1.9,1.0	12-15	1.8 IN/H
ⓥ	PROS-12-PRS30-CV-F-R/ 15A	HUNTER 12" POP-UP BODY WITH CHECK VALVE, FLOGUARD TECHNOLOGY, RECYCLED CAP, & HUNTER NOZZLE	30	0.5-3.7	12-15	1.8 IN/H
ⓒ ∨ ▽	PROS-12-PRS30-CV-F-R/ 12F,H,Q	HUNTER 12" POP-UP BODY WITH CHECK VALVE, FLOGUARD TECHNOLOGY, RECYCLED CAP, & HUNTER NOZZLE	30	2.7,1.3,0.7	10-12	2.0 IN/H
ⓥ	PROS-12-PRS30-CV-F-R/ 12A	HUNTER 12" POP-UP BODY WITH CHECK VALVE, FLOGUARD TECHNOLOGY, RECYCLED CAP, & HUNTER NOZZLE	30	0.3-2.5	10-12	2.0 IN/H
▣ ▼ ▼	PROS-12-PRS30-CV-F-R/ 10F,H,Q	HUNTER 12" POP-UP BODY WITH CHECK VALVE, FLOGUARD TECHNOLOGY, RECYCLED CAP, & HUNTER NOZZLE	30	0.9,0.4	8-10	2.0 IN/H
□	PROS-12-PRS30-CV-F-R/ 8F	HUNTER 12" POP-UP BODY WITH CHECK VALVE, FLOGUARD TECHNOLOGY, RECYCLED CAP, & HUNTER NOZZLE	30	1.0	6-8	1.7 IN/H
◈	PROS-12-PRS30-CV-F-R/ 8A	HUNTER 12" POP-UP BODY WITH CHECK VALVE, FLOGUARD TECHNOLOGY, RECYCLED CAP, & HUNTER NOZZLE	30	0.22-1.76	6-8	3.1 IN/H
TREE ROOT WATERING SYSTEM WITH SOCK						
▪	[RWS-B-C-1401]+[RWS-SOCK]	RAIN BIRD (INSTALL 2 BUBBLERS PER INDIVIDUAL STAND-ALONE TREE)	30	0.25	FLOOD	0.5 GPM
BUBBLERS						
▪	1401	RAIN BIRD BUBBLER	30	0.25	FLOOD	0.25 GPM

SUBSURFACE DRIPPERLINE

18" SPACING — AREA OF SHRUB OR SOD SUBSURFACE IRRIGATION ZONE: INSTALL TORO SUB-SURFACE DRIPPERLINE AS FOLLOWS: 5/8" DL2000 PC DRIPLINE WITH ROOTGUARD, MODEL RGP-218, STD COLOR, 0.5 GPH, 18 INCH SPACING, WITH TORO COMPRESSION FITTINGS. INSTALL TUBING AT A SPACING OF 16-18 INCHES BETWEEN ROWS, 3-4 INCHES FROM PAVEMENT OR LANDSCAPE EDGE, AND TRIANGULATE THE EMITTER PORTS BETWEEN ROWS. INSTALL ZONES WITH AIR VALVE, FLUSH VALVE, AND OPERATION INDICATOR AS INDICATED IN THE DRIPPERLINE CONSTRUCTION DETAILS. PROVIDE 3-4 INCHES OF SOIL COVER.

EACH DRIPLINE TUBING ZONE SHALL INCLUDE THE FOLLOWING ITEMS:

●	FCH-H	TORO HOSE END FLUSH DEVICE FOR FLUSHING THE PIPING AT END RUNS OF THE TORO DRIPPERLINE SYSTEMS. THIS ITEM PROVIDES A FLUSH OF THE SYSTEM TO EXHAUST DEBRIS WHICH MAY INFILTRATE THE EMITTER ZONE AND CLOG EMITTER OUTLETS. INSTALL IN OUT-OF-PLAY AREAS.
●	YD-500-34	TORO DRIPPERLINE AIR VENT/VACUUM RELIEF VALVE. INSTALL IN THE MIDDLE OF DRIPPERLINE ZONE. THIS ITEM EXHAUSTS AIR OR VACUUM WHICH COULD BE HARMFUL TO THE SYSTEM.
◉	DL-MP9	TORO DRIPPERLINE POP-UP OPERATION INDICATOR. INSTALL ONE PER DRIPPERLINE SYSTEM. THIS ITEM INDICATES THAT THE SUBSURFACE TUBING IS IN OPERATION BY A RISER THAT POPS UP WHEN PRESSURIZED. DO NOT INSTALL THIS DEVICE AT TURF ZONES, SHRUB ZONES ONLY. INSTALL AWAY FROM PUBLIC VIEW AND ACCESS.

VALVES

◆	[2160KR.IB]+[FS-B100]+[TW-D-1]	GRISWOLD 1.5" MASTER CONTROL VALVE, NORMALLY OPEN, WITH INTEGRAL UNION, BALL VALVE, AND RAINMASTER 1" BRASS FLOW SENSOR (RATED AT 2-50 GPM) AND ONE STATION DECODER.
◆	[100DWS.IB-R(1")]+[TW-D-1] [150DWS.IB-R(1.5")]+[TW-D-1]	GRISWOLD REMOTE CONTROL VALVE, NORMALLY CLOSED, BRASS CONSTRUCTION, FIPT, WITH INTEGRAL UNION, BALL VALVE, AND RAINMASTER ONE STATION DECODER. (MINIMUM FLOW: 0.1 GPM)
◆	[DWS-100R.IS-R]+[PRL-30]+ [TW-D-1]	GRISWOLD DRIP ZONE CONTROL VALVE, NORMALLY CLOSED, BRASS CONSTRUCTION, FIPT, WITH INTEGRAL UNION, BALL VALVE, STRAINER, SENNINGER LOW FLOW PRESSURE REGULATOR AND RAINMASTER ONE STATION DECODER. SIZE: 1". (EMITTER ZONES)
◆	44NP (1")	RAIN BIRD QUICK COUPLING VALVE WITH PURPLE LOCKING RUBBER COVER
⋈	LMV-22BB (2.5") LMV-44BB (4")	LEEMCO RESILIENT WEDGE GATE VALVE WITH SLIP-ON CONNECTIONS AND 2" SQ. WRENCH NUT. IPS SERIES (BELL X BELL). SIZE GATE VALVES EQUAL TO MAIN LINE PIPE SIZE.

CONTROLLER

Ⓟ	[TW-EGI36-SPED]+ [PROMAX]+[RS1000]	CONTROLLER ASSEMBLY CONSISTING OF A RAINMASTER "EAGLE" 36 STATION 2-WIRE CONTROLLER AND THE FOLLOWING OPTIONS: • SS PEDESTAL • iCENTRAL SERVICE • RAINMASTER REMOTE ASSEMBLY: PROMAX • RAINMASTER RAIN SENSOR: RS1000. WIRELESS, MOUNT TO BUILDING PER MANUFACTURER'S INSTRUCTIONS AND AS DIRECTED BY DISTRICT. • RAINMASTER 1 STATION DECODER: TW-D-1, ONE PER VALVE • RAINMASTER LIGHTNING ARRESTOR EVERY 600 FEET: TW-LA-1 • RAINMASTER 2-WIRE CABLE: TW-CAB-14 • RECYCLED WATER LABEL, T.CHRISTY NOTE: THIS CONTROLLER IS A 2-WIRE CABLE CONTROLLER WITH STATION DECODERS.

CONTROLLER STATION NUMBER

APPROXIMATE FLOW (GPM)

REMOTE CONTROL VALVE SIZE

IRRIGATION LEGEND (CONT.)

SYMBOL	DESCRIPTION
SLEEVES AND PIPE	
	MAIN LINE: (E) IRR MAIN LINE USING WELL WATER FOR IRRIGATION.
	1.5, 2, & 2.5-INCH: MAIN LINE: 1.5-INCH: 1120-SCHEDULE 40 PVC PURPLE PLASTIC PIPE WITH SOLVENT WELDED CONNECTIONS. 2 & 2.5-INCH: 1120-CLASS 315 PVC PURPLE PLASTIC PIPE WITH SOLVENT WELDED CONNECTIONS. PROVIDE SCHEDULE 80 PVC PLASTIC SOLVENT WELDED FITTINGS. SOIL COVER: 18-INCH IN SOIL, 18-INCH UNDER PEDESTRIAN PAVEMENT, 24-INCH UNDER VEHICULAR PAVEMENT. SIZE AS NOTED. PROVIDE DETECTABLE MARKING TAPE PER THE SPECIFICATION.
	4-INCH MAIN LINE: 1120-CLASS 200 PVC PURPLE PLASTIC PIPE WITH GASKETED CONNECTIONS. PROVIDE LEEMCO DUCTILE IRON GASKETED FITTINGS AND JOINT RESTRAINTS AT ALL CHANGES IN DIRECTION. PROVIDE T. CHRISTY POLYETHYLENE FITTING WRAP AROUND ALL DI FITTINGS. USE AN EPOXY COATED DUCTILE IRON SADDLE FOR VALVE CONNECTIONS AND CONTINUATION OF 2.5-INCH OR SMALLER MAIN LINE. SOIL COVER: 24-INCH IN SOIL, 24-INCH UNDER PEDESTRIAN PAVEMENT, 24-INCH UNDER VEHICULAR PAVEMENT. PROVIDE DETECTABLE MARKING TAPE PER THE SPECIFICATION.
	LATERAL LINE: 1120-SCHEDULE 40 PVC PURPLE PLASTIC PIPE WITH SCHEDULE 40 PVC PLASTIC SOLVENT WELDED FITTINGS. 12-INCH SOIL COVER. SIZE 1-INCH UNLESS OTHERWISE NOTED.
	SLEEVE: 1120-CLASS 200 OR 1120-SCHEDULE 40 PVC PLASTIC PIPE, WHICHEVER HAS THE LARGEST WALL THICKNESS, WITH SCHEDULE 40 PVC PLASTIC SOLVENT WELDED FITTINGS. SOIL COVER TO BE EQUAL TO COVER REQUIRED FOR PIPE CONTAINED WITHIN SLEEVE 18-INCH MINIMUM COVER. SIZE AS NOTED.
PB	ELECTRICAL CONDUIT FOR LOW VOLTAGE CONTROL WIRES: 1120-SCHEDULE 40 PVC GRAY PLASTIC ELECTRICAL CONDUIT WITH SCHEDULE 40 PVC GRAY PLASTIC SOLVENT WELDED SWEEP ELBOWS AND FITTINGS. COVER: 24-INCHES; SIZE: 2-INCH DIA.
	ELECTRICAL PULL BOX FOR CONDUIT: RECTANGULAR PLASTIC BOX WITH PLASTIC BOLT-DOWN LID. USE A CONCRETE PULL BOX WITH A TRAFFIC RATED LID FOR ALL PULL BOXES LOCATED IN VEHICULAR PAVEMENT (WHERE NECESSARY).
	LOW VOLTAGE CONVENTIONAL CONTROL AND COMMON WIRE ROUTE

JDE

JAMES D. EDDY ASSOCIATES
LANDSCAPE IRRIGATION ENGINEERS
P.O. BOX 2291
DANVILLE, CALIFORNIA 94526
P.(925) 867-3339
EMAIL: JDE@EDDYASSOCIATES.COM
PLANNING - DESIGN - MANAGEMENT
JDE PROJECT NO: 18022

IRRIGATION DESIGNER:
James D. Eddy
JAMES D. EDDY ASSOCIATES, DANVILLE, CALIFORNIA
NOTE: NO LICENSE FOR THE LANDSCAPE IRRIGATION SYSTEM DESIGN PROFESSION IS AVAILABLE IN THE STATE OF CALIFORNIA.
MEMBER: AMERICAN SOCIETY OF IRRIGATION CONSULTANTS

ABBREVIATIONS:

AV	AIR VALVE
CI	CAST IRON
CU	COPPER
DEG	DEGREES
DI	DUCTILE IRON
DIA	DIAMETER
ECV	EMITTER CONTROL VALVE
EFF	EFFICIENCY
ETWU	ESTIMATED TOTAL WATER USE
ETO(ET)	EVAPOTRANSPIRATION
(E)	EXISTING
FT	FEET
FIPT	FEMALE IRON PIPE THREAD
FPS	FEET PER SECOND
(F)	FUTURE
FS	FLOW SENSOR
FV	FLUSH VALVE
GA	GAUGE
GI	GALVANIZED IRON
GV	GATE VALVE
GPH	GALLONS PER HOUR
GPM	GALLONS PER MINUTE
ID	INTERNAL DIAMETER
IN	INCHES
IRR	IRRIGATION
MAWA	MAXIMUM APPLIED WATER ALLOWANCE
MAX	MAXIMUM
MCV	MASTER CONTROL VALVE
MV	MASTER VALVE
MIN	MINIMUM
MIPT	MALE IRON PIPE THREAD
MPR	MATCHED PRECIPITATION RATE
MWELO	MODEL WATER EFFICIENT LANDSCAPE ORDINANCE
(N)	NEW
NIC	NOT IN CONTRACT
NPW	NON POTABLE WATER
NTS	NOT TO SCALE
OD	OUTSIDE DIAMETER
PE	POLYETHYLENE
POC	POINT OF CONNECTION
PRECIP	PRECIPITATION
PRV	PRESSURE REDUCING VALVE
PVBA	PRESSURE VACUUM BREAKER ASSEMBLY
PSI	POUNDS PER SQUARE INCH
PVC	POLYVINYLCHLORIDE
PW	POTABLE WATER
QTY	QUANTITY
QCV	QUICK COUPLING VALVE
RCV	REMOTE CONTROL VALVE
RPBA	REDUCED PRESSURE BACKFLOW ASSEMBLY
RS	RIGID STEEL
RW	RECYCLED WATER
SCH	SCHEDULE
SF	SQUARE FOOT OR FEET
SQ	SQUARE
SS	STAINLESS STEEL
STD	STANDARD
TBD	TO BE DETERMINED
TBE	THREADED BOTH ENDS
TOE	THREADED ONE END
TYP	TYPICAL
UON	UNLESS OTHERWISE NOTED
UPC	UNIFORM PLUMBING CODE
UV	ULTRAVIOLET
UVR	ULTRAVIOLET RESISTANT
VAC	VOLTS-ALTERNATING CURRENT
VB	VALVE BOX
WM	WATER METER

QUATTROCCHI KWOK ARCHITECTS
Main Office:
636 Fifth Street, Santa Rosa, CA 95404
Pleasanton Office:
600 Main Street, Suite E,
Pleasanton, CA 94566
(707) 576-0829

GSM landscape architects, inc.
1700 Soscol Ave. Suite 23
Napa, CA 94559
707-255-4630
www.gsmlainc.com

REGISTERED LANDSCAPE ARCHITECT — STEPHEN STRAND — No. 2790 — Exp. 10-31-20 — STATE OF CALIFORNIA

FREEDOM HIGH SCHOOL

PERFORMING ARTS AND CTE FACILITIES

1050 Neroly Rd
Oakley, CA 94561

Liberty Union High School District

ARCH PROJECT NO:	1739.00
DRAWN BY:	JMH/HDJ
DRAWING SCALE:	AS SHOWN
PTN:	61721-0068

BID SET

AUGUST 13, 2019

SHEET TITLE

IRRIGATION LEGEND

SHEET NUMBER

L3.1

IRRIGATION INSTALLATION NOTES

REFER TO IRRIGATION SPECIFICATIONS FOR DETAILED INFORMATION.
LUHSD = LIBERTY UNION HIGH SCHOOL DISTRICT

1. PROVIDE INSTALLATION BY PERSONS FAMILIAR WITH IRRIGATION WORK AND UNDER THE SUPERVISION OF A QUALIFIED SUPERVISOR.
2. OBTAIN THE PERMITS REQUIRED AND PROVIDE LABOR AND MATERIALS NECESSARY TO FULLY COMPLETE THE WORK IN ACCORDANCE WITH THE DRAWINGS AND THE SPECIFICATIONS.
3. LOCATE AND PROTECT NEW AND EXISTING UTILITIES PRIOR TO EXCAVATION. DO NOT DAMAGE EXISTING UTILITIES, PAVING OR STRUCTURES. PROVIDE THE NECESSARY REPAIRS AT NO ADDITIONAL COST TO LUHSD.
4. REMOVE DEBRIS AND ACCUMULATION OF DEBRIS AS A RESULT OF IRRIGATION CONSTRUCTION FROM THE SITE AND LEAVE AREA IN A CLEAN CONDITION ACCEPTABLE TO LUHSD. MAINTAIN SITE FOR THE SPECIFIED CALENDAR DAYS FOLLOWING ACCEPTANCE OF THE WORK BY LUHSD AND MAKE CORRECTIONS OR REPAIRS TO THE IRRIGATION AS DIRECTED BY LUHSD AT THE COMPLETION OF THE MAINTENANCE PERIOD.
5. THE DRAWINGS ARE DIAGRAMMATIC. PIPE AND EQUIPMENT MAY BE SHOWN IN PAVING FOR CLARITY ONLY – INSTALL IN PLANTING AREAS WHERE POSSIBLE. DUE TO THE SCALE OF THE DRAWINGS, ALL OFFSETS, FITTINGS, SLEEVES, ETC. WHICH MAY BE REQUIRED ARE NOT INDICATED. INVESTIGATE THE STRUCTURAL AND FINISHED CONDITIONS AFFECTING THE CONTRACT WORK INCLUDING OBSTRUCTIONS GRADE DIFFERENCES OR AREA DIFFERENCES WHICH MAY HAVE NOT BEEN CONSIDERED IN THE ENGINEERING. WHERE FIELD CHANGES EXIST, COORDINATE THE INSTALLATION WORK ACCORDINGLY BY NOTIFICATION AND APPROVAL OF LUHSD AS PER THE CONTRACT SPECIFICATIONS. COORDINATE IRRIGATION CONTRACT WORK WITH ALL APPLICABLE CONTRACTORS FOR THE LOCATION AND INSTALLATION OF PIPE, CONDUIT, OR SLEEVES OF PIPE, CONDUIT OR SLEEVES THROUGH OR UNDER WALLS, ROADWAYS, PAVING, STRUCTURE, ETC. BEFORE CONSTRUCTION. ASSUME FULL RESPONSIBILITY FOR REQUIRED REVISIONS IF THESE NOTIFICATIONS ARE NOT PERFORMED.
6. CONTRACTOR SHALL COORDINATE WITH OTHER CONTRACTORS ALL IRRIGATION SLEEVES, CONDUIT, AND PIPING INSTALLED UNDER PAVEMENT PRIOR TO INSTALLATION.
7. THE INTENT OF THIS IRRIGATION SYSTEM DESIGN IS TO PROVIDE THE MINIMUM AMOUNT OF WATER REQUIRED TO SUSTAIN GOOD PLANT HEALTH.
8. PROGRAM THE CONTROLLER TO PROVIDE THE MINIMUM AMOUNT OF WATER NEEDED TO SUSTAIN GOOD PLANT HEALTH. MAKE ADJUSTMENTS TO THE PROGRAM FOR SEASONAL WEATHER CHANGES, PLANT MATERIAL, WATER REQUIREMENTS, MOUNDS AND SLOPES, SUN, SHADE AND WIND EXPOSURES.
9. THE IRRIGATION SYSTEM FOR THIS CONTRACT WORK AREA IS DESIGNED FOR 1 VALVE TO OPERATE AT ONE TIME. THIS WILL ALLOW THE SYSTEM TO IRRIGATE IN APPROXIMATELY 8 HOURS OR LESS ACCORDING TO WEATHER CONDITIONS. TOTAL GPM DEMAND OF SYSTEM WILL BE APPROXIMATELY 50 GPM MAXIMUM. DO NOT UNDER ANY CIRCUMSTANCE EXCEED 50 GPM OR OPERATE MORE THAN ONE (1) VALVE AND ONE QUICK COUPLING VALVE AT THE SAME TIME.
11. IRRIGATION CONTROL WIRE: RAINMASTER 2–WIRE CABLE, TW–CAB–14, WITH U.L. APPROVAL FOR DIRECT BURIAL IN GROUND, SIZE AWG–UF #14–1.
12. SPLICES: MADE WITH 3M–DBY, OR SPEARS MODEL #400, OR APPROVED EQUAL SEAL PACKS.
13. INSTALL ONE SPARE 2–WIRE CABLE FROM CONTROLLER ALONG THE ENTIRE MAIN LINE. INSTALL 36" EXCESS WIRE INTO A QUICK COUPLER BOX AT EACH VALVE GROUP. WEATHERPROOF UNUSED WIRE ENDS. SPLICING OF 2–WIRE CABLE AND 24 VOLT WIRES IS NOT PERMITTED EXCEPT IN VALVE BOXES. LEAVE A 36" LONG, 1" DIAMETER COIL OF EXCESS WIRE AT EACH SOLENOID WIRE SPLICE.
14. PLASTIC VALVE BOXES AND LIDS SHALL BE PURPLE IN COLOR WITH BOLT DOWN, NON–HINGED COVER MARKED "IRRIGATION". BOX BODY SHALL HAVE KNOCK OUTS. MANUFACTURER: RAIN BIRD, NDS, CARSON/BROOKS, OR APPROVED EQUAL.
15. INSTALL REMOTE CONTROL VALVE BOXES 12" FROM WALK, CURB, BUILDING OR LANDSCAPE FEATURE. AT MULTIPLE VALVE BOX GROUPS, EACH BOX SHALL BE AN EQUAL DISTANCE FROM THE WALK, CURB, ETC. AND EACH BOX SHALL BE 12" APART. SHORT SIDE OF RECTANGULAR VALVE BOXES SHALL BE PARALLEL TO WALK, CURB, ETC. REFER TO BOX INSTALLATION DETAIL.
16. FLUSH AND ADJUST IRRIGATION HEADS FOR EFFICIENT PERFORMANCE. PREVENT OVERSPRAY ON THE WALKS, PLAYGROUNDS, ROADWAYS, SIGNS, LIGHTS, AND/OR BUILDINGS. SELECT THE BEST DEGREE OF ARC TO FIT THE EXISTING SITE CONDITIONS AND THROTTLE THE FLOW CONTROL OR PRESSURE REGULATION DEVICE AT EACH VALVE TO OBTAIN THE BEST OPERATING PRESSURE FOR EACH SYSTEM.
17. SET POP–UP HEADS PERPENDICULAR TO FINISH GRADE OF THE AREA TO BE IRRIGATED UNLESS OTHERWISE NOTED ON THE DRAWINGS.
18. IRRIGATION HEAD LAYOUT AND PIPING AS SHOWN ON THE DRAWINGS IS INDICATIVE OF THE WORK TO BE INSTALLED. IRRIGATION HEADS, ARC OF SPRAY, RADIUS OF SPRAY AND PIPING AT CERTAIN LOCATIONS MAY REQUIRE FIELD ADJUSTMENT TO PREVENT HARM TO TREE ROOTS AND INTERFERENCE OF TREES TO IRRIGATION SPRAY.
19. EXERCISE PARTICULAR ATTENTION AT ALL EXISTING AND NEW TREES TO ELIMINATE DIRECT SPRAY OF IRRIGATION HEADS ON TREE TRUNKS.
20. THE SPRINKLER SYSTEM DESIGN IS BASED ON THE MINIMUM OPERATING PRESSURE SHOWN ON THE IRRIGATION DRAWINGS. VERIFY WATER PRESSURE PRIOR TO CONSTRUCTION. REPORT ANY DIFFERENCE BETWEEN THE WATER PRESSURE INDICATED ON THE DRAWINGS AND THE ACTUAL PRESSURE READING AT THE IRRIGATION POINT OF CONNECTION TO LUHSD.
21. IRRIGATION DEMAND: 50 GPM MAX. AT 80 PSI WELL WATER PRESSURE.
22. PIPE SIZING SHOWN ON THE DRAWINGS IS TYPICAL. AS CHANGES IN LAYOUT OCCUR DURING STAKING AND CONSTRUCTION ADJUST THE SIZE ACCORDINGLY.
23. PIPE THREAD SEALANT COMPOUND SHALL BE PERMATEX 51 OR RECTORSEAL T+2.
24. BEFORE COMMENCING WITH WORK UNDER THIS CONTRACT, NOTIFY UNDERGROUND SERVICE ALERT AT 811 OR 1–800–227–2600 AND LUHSD. DETERMINE THE EXACT LOCATION OF EXISTING UTILITIES, PIPES, AND STRUCTURES BEFORE COMMENCING WORK. COSTS OF DAMAGES WHICH OCCUR FROM FAILURE TO ACCURATELY LOCATE AND PRESERVE THESE UTILITIES SHALL BE THE RESPONSIBILITY OF THE IRRIGATION CONTRACTOR.
25. CAUTION: USE SHOVELS AND HAND DIG TRENCHES AROUND (E) TREE ROOT SYSTEMS. INSTALL PIPING AWAY FROM (E) TREE ROOT SYSTEMS. PROTECT (E) TREE ROOT SYSTEMS AT ALL TIMES. TYPICAL FOR ALL (E) TREE ROOT SYSTEMS. INSTALL ALL BURIED IRRIGATION SUCH AS PVC PIPING, VALVES, HEADS, BOXES, CONDUIT WITH WIRES, IN A MANNER TO AVOID EXCAVATING OR TRENCHING WITHIN THE EXISTING TREE DRIPLINES AND ROOTZONES.
26. NOTE: NO PLASTIC PIPE OR SOLVENT WELDED JOINTS ARE PERMITTED ABOVE GRADE.
27. CONTROLLER, MASTER VALVE, AND FLOW SENSOR NOTE: CONTRACTOR SHALL BE RESPONSIBLE FOR ORDERING, COORDINATION WITH DISTRIBUTOR AND CONTROLLER ASSEMBLY VENDOR, THE INSTALLATION OF MASTER VALVE, FLOW SENSOR, AND ALL ASSOCIATED PARTS AND HARDWARE TO PROVIDE A COMPLETE AND FULLY OPERABLE SYSTEM.
28. CONTRACTOR SHALL COORDINATE WORK AFFECTING EXISTING, TEMPORARY AND PROPOSED IMPROVEMENTS TO PROVIDE CONTINUOUS IRRIGATION SYSTEM OPERATION.
29. CATHODIC PROTECTION REQUIRED – SEE CATHODIC PROTECTION PLANS AND SPECIFICATIONS.
30. SUBSURFACE EMITTER IRRIGATION:
    - CONTACT THE LOCAL SUBSURFACE MANUFACTURER'S REPRESENTATIVE FOR THE INSTALLATION PROCEDURES AND FOR ASSISTANCE WITH THE INSTALLATION OF THE SUBSURFACE EMITTER LINE.
    - INSTALL EMITTER DRIPPERLINE ACCORDING TO THE MANUFACTURER'S INSTRUCTIONS AND GUIDELINES AND THE DETAILS SHOWN ON THE PLANS.
    - PRIOR TO PLANTING, THOROUGHLY FLUSH ALL EMITTER TUBING TO REMOVE CONSTRUCTION DEBRIS AND SOIL FROM THE TUBING.
    - PRIOR TO PLANT INSTALLATION MAKE SURE THE SURROUNDING SHRUB PLANTING SOIL AND SOIL BASE FOR PLANTS IS THOROUGHLY MOISTENED.
    - TEMPORARY SURFACE WATERING IS REQUIRED AFTER INITIAL PLANTING OF THE PLANTS, SEED, OR SOD. ALLOW TWO WEEKS OR MORE AS NEEDED TO PROMOTE ROOT GROWTH AND SUSTAIN GOOD PLANT HEALTH.
    - CONTAINER ROOTBALL SOIL WILL HOLD WATER DIFFERENTLY FROM THE SITE'S NATIVE SOIL. DO NOT ALLOW SHRUB CONTAINER ROOTBALLS TO DRY OUT. KEEP CONTAINER ROOTBALLS MOIST AT ALL TIMES.
    - OBSERVE PLANTS TO MAKE SURE THAT THE PLANTS ARE ROOTING IN THE PREPARED SURROUNDING SOIL BASE AND HAVE ENOUGH MOISTURE.

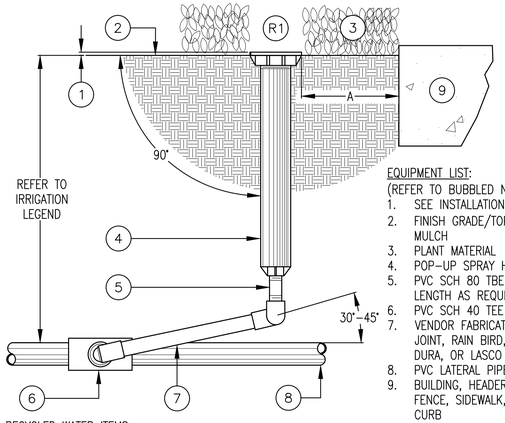

EQUIPMENT LIST:
(REFER TO BUBBLED NUMBERS)
1. SEE INSTALLATION NOTE 1
2. FINISH GRADE/TOP OF MULCH
3. PLANT MATERIAL
4. POP–UP SPRAY HEAD
5. PVC SCH 80 TBE NIPPLE, LENGTH AS REQUIRED
6. PVC SCH 40 TEE OR ELL
7. VENDOR FABRICATED SWING JOINT, RAIN BIRD, TORO, DURA, OR LASCO
8. PVC LATERAL PIPE
9. BUILDING, HEADERBOARD, FENCE, SIDEWALK, OR CURB

RECYCLED WATER ITEMS:
R1. TOP OF HEADS MUST CLEARLY INDICATE THE USE OF RECYCLED WATER.

INSTALLATION NOTES:
1. INSTALL TOP OF HEAD 1" ABOVE FINISH GRADE IN SHRUB AREAS AND FLUSH WITH GRADE IN TURF AREAS. SIDE INLET USE IS NOT PERMITTED.
2. DIMENSION "A": INSTALL HEAD 4" FROM HEADERBOARD OR FENCE AND 24" FROM BUILDINGS AND NON–PERMEABLE PAVED SURFACES.
3. INSTALL HEAD PERPENDICULAR TO FINISHED GRADE.
4. PRIOR TO NOZZLE INSTALLATION, FLUSH HEAD WITH WATER USING MANUFACTURER'S FLUSH NOZZLE TO ELIMINATE DEBRIS FROM WITHIN HEAD AND RISER.
5. INSTALL NOZZLE SCREEN. INSTALL NOZZLE, HAND TIGHT. RATCHET POP–UP RISER AND ADJUST VARIABLE ARC NOZZLES SO NOZZLE SPRAY IS WITHIN PLANTED AREA. NO OVERSPRAY ON WINDOWS, BUILDINGS, STREETS OR PAVEMENT.
6. POP–UP TREE OR SHRUB BUBBLERS:
   A. TREES: INSTALL ADJACENT TO NURSERY ROOTBALL AND AN EVEN DISTANCE FROM OTHER TREE BUBBLERS WHERE TWO OR MORE BUBBLERS ARE SPECIFIED.
   B. SHRUBS: INSTALL STREAM BUBBLER SO WATER STREAM IRRIGATES THE NURSERY ROOTBALL.

1 POP-UP SPRAY
NOT TO SCALE

DO NOT COPY WITHOUT WRITTEN PERMISSION OF JDE © '19

RECYCLED WATER ITEMS:
R1. VALVE BOX AND LID COLOR: RECYCLED WATER PURPLE
R2. RECYCLED WATER TAG – ATTACH TO VALVE WITH A PLASTIC ZIP TIE.

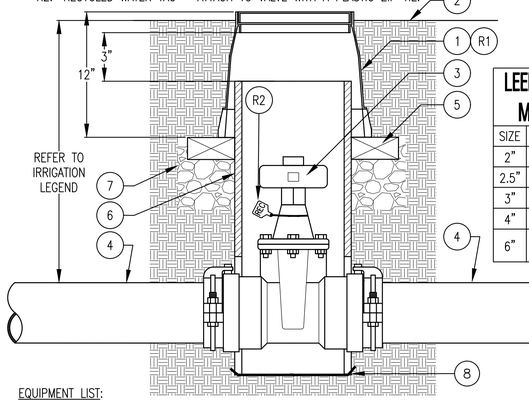

LEEMCO VALVE MODEL NO.	
SIZE	MODEL NO.
2"	LMV–11BB
2.5"	LMV–22BB
3"	LMV–33BB
4"	LMV–44BB
6"	LMV–66BB–SON

EQUIPMENT LIST:
(REFER TO BUBBLED NUMBERS)
1. 10" ROUND PLASTIC VALVE BOX WITH PLASTIC BOLT–DOWN LID.
2. FINISH GRADE
3. LEEMCO GATE VALVE, BELL CONNECTIONS WITH INTEGRAL RESTRAINTS. UNLESS OTHERWISE NOTED, PLACE VALVE IN THE OPEN POSITION. BOLT TORQUE: 3" = 20 FT–LBS; 4", 6" & 8" = 50 FT–LBS.
4. MAIN LINE PIPE (ACCORDING TO LEGEND AND SPECIFICATIONS)
5. BRICK BASE (2 TOTAL, 180 DEGREES APART)
6. 10" SCH. 40 OR CLASS 200 PVC RISER–NOTCH RISER TO FIT OVER PIPE
7. CRUSHED GRAVEL, 6" DEEP, ALL AROUND
8. METAL WIRE MESH TO PREVENT GOPHER INTRUSION, 1/2" MESH, 19 GA, GALVANIZED

INSTALLATION NOTES:
21. INSTALL VALVE BOX FLUSH WITH FINISH GRADE IN TURF AND 1" ABOVE FINISH GRADE IN SHRUB AREAS.
22. KEEP BRICKS AWAY FROM PIPE.

3 GATE VALVE, LEEMCO WITH BELL CONNECTIONS & RESTRAINTS (2.5" & 4")
NOT TO SCALE

DO NOT COPY WITHOUT WRITTEN PERMISSION OF JDE © '19

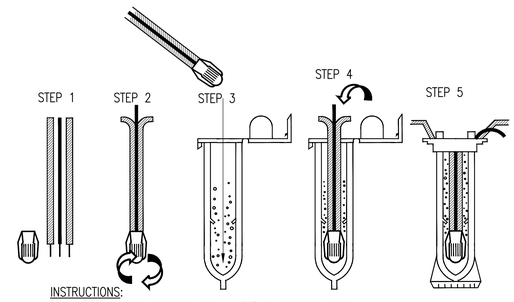

INSTRUCTIONS:
1. STRIP WIRES APPROXIMATELY 1/2" TO EXPOSE WIRE.
2. TWIST CONNECTOR AROUND WIRES CLOCKWISE UNTIL HAND TIGHT, DO NOT OVERTIGHTEN.
3. INSERT WIRE ASSEMBLY INTO PLASTIC TUBE UNTIL WIRE CONNECTOR SNAPS PAST LIP IN BOTTOM OF TUBE.
4. PLACE WIRES WHICH EXIT TUBE IN WIRE EXIT HOLES AND CLOSE CAP UNTIL IT SNAPS.
5. INSPECT FINAL SPLICE ASSEMBLY TO BE SECURE AND FINISHED.

2 WIRE SPLICE
NOT TO SCALE

DO NOT COPY WITHOUT WRITTEN PERMISSION OF JDE © '19

RECYCLED WATER ITEMS:
1. VALVE BOX AND LID COLOR: RECYCLED WATER PURPLE

ROUND VALVE BOX (TYP.)
INSTALL QCV WITH VALVE GROUP WHERE A QCV IS SHOWN AT VALVE GROUP ON PLANS. HEAT STAMP QCV ON LID OF BOX.
HEAT STAMP VALVE ID NUMBER ON LID OF BOX (CHRISTY EVERHOT MODEL #004X)
RECTANGULAR VALVE BOX (TYP.)

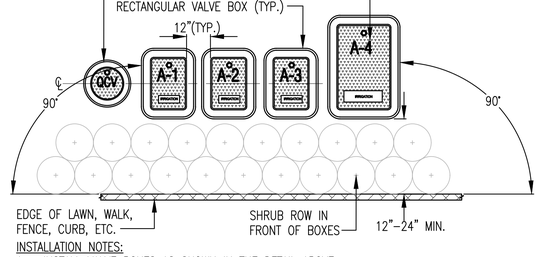

INSTALLATION NOTES:
1. INSTALL VALVE BOXES AS SHOWN IN THE DETAIL ABOVE.
2. INSTALL VALVE BOX ASSEMBLIES IN SHRUB OR GROUND COVER ZONES. VALVE ASSEMBLIES INSTALLED IN A TURF ZONE IS PERMITTED ONLY IF A SHRUB OR GROUND COVER AREA DOES NOT EXIST IN THE PROXIMITY OF THE IRRIGATION ZONE.
3. PLACE THE CENTER OF THE VALVE BOX OVER THE CENTER OF THE REMOTE CONTROL VALVE. INSTALL VALVE BOX IN A WAY TO ENABLE EASY SERVICING OR REMOVAL OF VALVE.
4. INSTALL TOP OF BOX 1" ABOVE FINISHED GRADE IN SHRUB OR GROUND COVER AREAS OR EQUAL TO THE DEPTH OF THE MULCH AND FLUSH WITH GRADE IN TURF ZONES. INSTALL THE TOP OF BOX AT THE SAME ANGLE AS THE FINISHED GRADE.
5. PREVENT THE COLLAPSE AND DEFORMATION OF VALVE BOX SIDES. DO NOT HEAVILY COMPACT SOIL AGAINST THE SIDES OF THE VALVE BOX.
6. INSTALL EXTENSION RISERS TO VALVE BOX AS REQUIRED TO COMPLETELY ENCLOSE VALVE ASSEMBLY. PROVIDE EXTENSION RISER MANUFACTURED BY THE SAME MANUFACTURER OF THE VALVE BOX.
7. PREVENT SOIL INTRUSION INTO THE BOX. USE 20 MIL POLYETHYLENE TAPE AROUND PIPE CUTOUTS AS NEEDED.
8. SAWCUTTING OR MODIFYING THE VALVE BOXES BEYOND WHAT THE MANUFACTURER ALLOWS IS NOT PERMITTED.
11. WHEN ASSEMBLY IS COMPLETE INSTALL THE GRAVEL BELOW THE VALVE. FINISHED GRAVEL SHALL BE CLEAN WITHOUT DEBRIS IN THE VALVE BOX.
12. WHEN WORK IS COMPLETE AND ACCEPTED BY THE DISTRICT OR TO PREVENT VANDALISM, BOLT DOWN THE LIDS.

4 BOX INSTALLATION
NOT TO SCALE

DO NOT COPY WITHOUT WRITTEN PERMISSION OF JDE © '19

JDE
JAMES D. EDDY ASSOCIATES
LANDSCAPE IRRIGATION ENGINEERS
P.O. BOX 2291
DANVILLE, CALIFORNIA 94526
P:(925) 867-3339
EMAIL: JDE@EDDYASSOCIATES.COM
PLANNING–DESIGN–MANAGEMENT
JDE PROJECT NO: 18022

IRRIGATION DESIGNER:
James D. Eddy
JAMES D. EDDY ASSOCIATES, DANVILLE, CALIFORNIA
NOTE: NO LICENSE FOR THE LANDSCAPE IRRIGATION SYSTEM DESIGN PROFESSION IS AVAILABLE IN THE STATE OF CALIFORNIA.
MEMBER: AMERICAN SOCIETY OF IRRIGATION CONSULTANTS

QUATTROCCHI KWOK ARCHITECTS
Main Office:
636 Fifth Street, Santa Rosa, CA 95404
Pleasanton Office:
600 Main Street, Suite E,
Pleasanton, CA 94566
(707) 576-0829

GSM landscape architects, inc.
1700 Soscol Ave. Suite 23
Napa, CA 94559
707-255-4630
www.gsmlainc.com

STEPHEN W. STRANZL, REGISTERED LANDSCAPE ARCHITECT, No. 2790, Exp. 10–31–20, STATE OF CALIFORNIA

FREEDOM HIGH SCHOOL

PERFORMING ARTS AND CTE FACILITIES

1050 Neroly Rd
Oakley, CA 94561

Liberty Union High School District

ARCH PROJECT NO:		1739.00
DRAWN BY:		JMH/HDJ
DRAWING SCALE:		AS SHOWN
PTN:		61721-0068

BID SET

AUGUST 13, 2019

SHEET TITLE

IRRIGATION NOTES & DETAILS

SHEET NUMBER

L3.2

RECYCLED WATER ITEMS:
R1. VALVE BOX AND LID COLOR: RECYCLED WATER PURPLE. PURPLE LID WITH WORDS "RECYCLED WATER" PERMANENTLY ETCHED, CAST, MOLDED, OR PAINTED.
R2. RECYCLED WATER TAG – ATTACH TO WIRE WITH PLASTIC ZIP TIE.

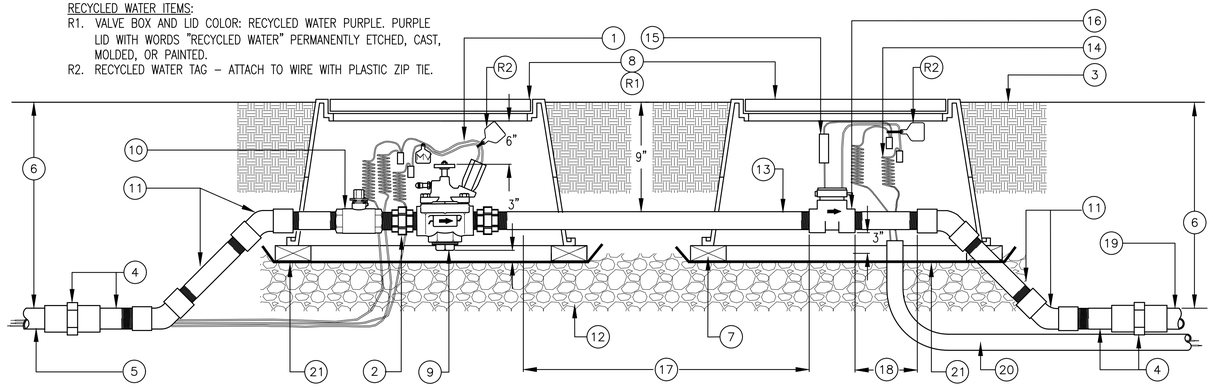

ITEM LIST AND INSTALLATION NOTES:

1. VALVE CONTROL WIRE – PROVIDE 3M DBY SEAL PACKS AT SPLICES, 36" OF EXCESS UF WIRE IN A 1" DIAMETER COIL AND VALVE TAG
2. UNION, BRASS, THREADED
3. FINISH GRADE
4. FEMALE ADAPTER, 2" X 2.5", SCH 80 PVC, S X S, AND 2" TOE NIPPLE, SCH 80 PVC
5. PVC MAIN LINE FROM FILTER DISCHARGE
6. REFER TO IRRIGATION LEGEND OR SPECIFICATIONS FOR SOIL COVER
7. COMMON BRICK, 8 TOTAL, INSTALL AT EACH CORNER OF EACH VALVE BOX
8. VALVE BOX, PLASTIC, RECTANGULAR WITH BOLT–DOWN LID. INSTALL BOX AS SHOWN IN BOX INSTALLATION DETAIL. USE JUMBO BOX FOR MASTER VALVE AND STANDARD BOX FOR THE FLOW SENSOR.
9. MASTER CONTROL VALVE WITH FLOW CONTROL AND MANUAL BLEED (SIZE AS SPECIFIED IN IRRIGATION LEGEND OR SPECIFICATIONS)
10. BALL VALVE, BRASS, FULL PORT, THREADED, APOLLO 78–130 SERIES, SIZE EQUALS MCV SIZE
11. ELBOWS (45 DEGREE), NIPPLES (TBE), BRASS, THREADED, AS REQUIRED
12. DRAIN ROCK – 6" DEEP BELOW VALVE (NO SOIL IN VALVE BOX)
13. NIPPLE, BRASS, TBE (BETWEEN MASTER VALVE & FLOW SENSOR)
14. CONTROL WIRE: PROVIDE 3M DBY SEAL PACKS AT SPLICES, 36" OF EXCESS WIRE IN A 1" DIAMETER COIL (#14 AWG–UF WIRE) AND CONTROLLER I.D. TAG
15. 0.067 AMP FUSE LINK TO PROTECT METERING INSERT
16. FLOW SENSOR, SIZE AS SPECIFIED IN LEGEND – INSTALL FLOW SENSOR TO ALLOW STRAIGHT–FLOW OF A MINIMUM OF TEN TIMES THE DIAMETER OF THE MAIN LINE PIPE ON THE INLET SIDE AND FIVE TIMES THE DIAMETER OF THE MAIN LINE PIPE ON THE OUTLET SIDE OF THE SENSOR. WIRE TO CONTROLLER AS DIRECTED BY MANUFACTURER'S REPRESENTATIVE.
17. PROVIDE TEN (10) X THE PIPE DIAMETER; EX: 10 X 2.5" PIPE = 25" MINIMUM
18. PROVIDE FIVE (5) X THE PIPE DIAMETER; EX: 5 X 2.5" = 12.5" MINIMUM
19. PVC MAIN LINE TO IRRIGATION SYSTEM
20. INSTALL FLOW SENSOR CABLE IN 1" DIA. PVC CONDUIT FROM FLOW SENSOR TO CONTROLLER ENCLOSURE. USE RAINMASTER EV–CAB–SEN CABLE. PROVIDE AND INSTALL PULL BOXES EVERY 200 FEET. DO NOT SPLICE SENSOR CABLE.
21. METAL WIRE MESH TO PREVENT GOPHER INTRUSION, 1/2" MESH, 19 GA, GALVANIZED

1 MASTER CONTROL VALVE & FLOW SENSOR
NOT TO SCALE

DO NOT COPY WITHOUT WRITTEN PERMISSION OF JDE © 2019

RECYCLED WATER ITEMS:
R1. VALVE BOX AND LID COLOR: RECYCLED WATER PURPLE
R2. RECYCLED WATER TAG – ATTACH TO VALVE WITH A PLASTIC ZIP TIE.

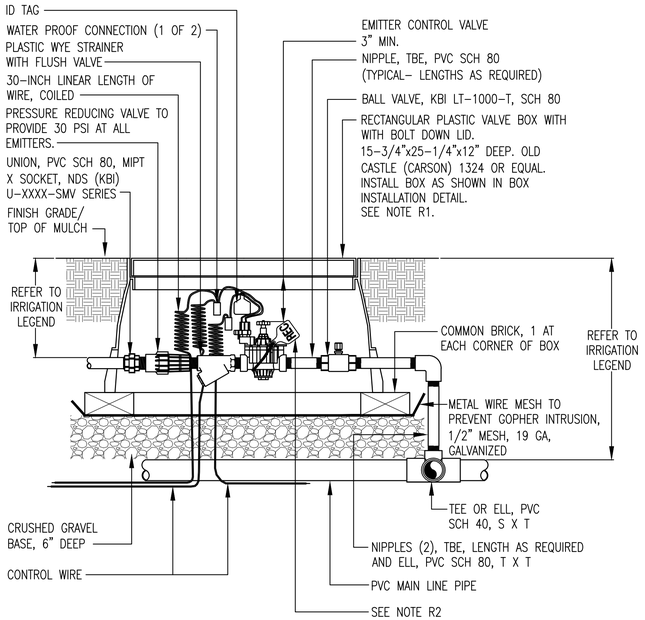

2 EMITTER CONTROL VALVE
NOT TO SCALE

DO NOT COPY WITHOUT WRITTEN PERMISSION OF JDE © 2019

RECYCLED WATER ITEMS:
R1. VALVE BOX AND LID COLOR: RECYCLED WATER PURPLE
R2. RECYCLED WATER TAG – ATTACH TO VALVE WITH A PLASTIC ZIP TIE.

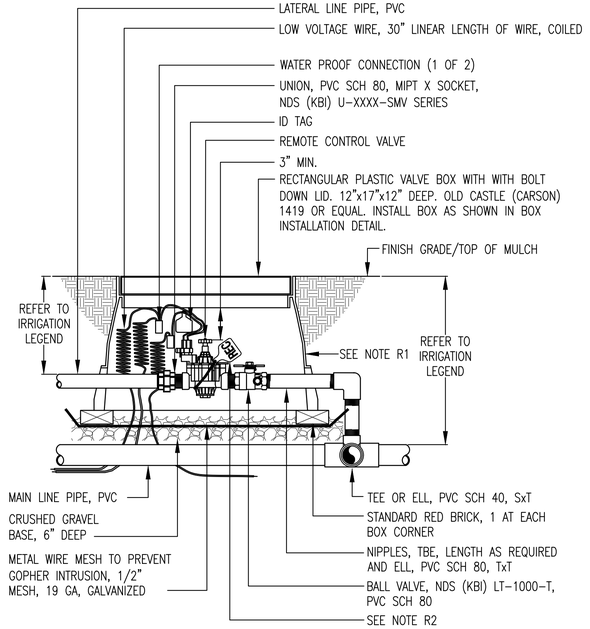

3 REMOTE CONTROL VALVE (SPRAY AND BUBBLER ZONES)
NOT TO SCALE

DO NOT COPY WITHOUT WRITTEN PERMISSION OF JDE © 2019

IRRIGATION SCHEDULES

SPRAY IRRIGATION @ MOW FREE SOD – LOW WATER USE

MANUFACTURER:	HUNTER										Pr RATE(INCHES/HOUR):		2.0	
MODEL:	PROS										SPECIES FACTOR:		0.3	
PSI:	30										IRRIGATION EFFICIENCY:		0.75	
SPACING(FEET):	14.5										SOIL INFILTRATION RATE(INCHES):		0.2	
GPM:	3.7										YEAR 2 REDUCTION AMOUNT(%):		10	
	MONTH	JAN	FEB	MAR	APR	MAY	JUNE	JULY	AUG	SEP	OCT	NOV	DEC	TOTAL
Eto/MONTH(INCHES)		1.0	1.5	2.9	4.5	6.1	7.1	7.9	6.7	5.2	3.2	1.4	0.7	48.3
Eto/WEEK(INCHES)		0.2	0.3	0.7	1.0	1.4	1.6	1.8	1.5	1.2	0.7	0.3	0.2	
MINUTES PER WEEK	YEAR 1	3	5	9	13	17	20	22	19	15	9	4	2	
	YEAR 2	3	5	9	12	16	18	20	18	14	9	4	2	
DAYS PER WEEK	YEAR 1	1	1	2	3	5	5	5	5	5	3	2	1	
	YEAR 2	1	1	2	3	5	5	5	5	5	3	2	1	
MINUTES OF WATER PER DAY	YEAR 1	3	5	5	5	4	4	5	4	3	3	2	2	
	YEAR 2	3	5	5	5	4	4	5	4	3	3	2	2	
CYCLES PER DAY TO MEET SOIL INFILTRATION RATE	YEAR 1	2	2	2	2	2	2	2	2	2	2	1	1	
	YEAR 2	2	2	2	2	2	2	2	2	2	2	1	1	
MAX. RUN TIME (MINUTES) PER CYCLE	YEAR 1	2	3	3	3	2	2	3	2	2	2	2	2	
	YEAR 2	2	3	3	3	2	2	3	2	2	2	2	2	

BUBBLER IRRIGATION @ TREES – LOW WATER USE

MANUFACTURER:	RAIN BIRD										TREE CANOPY(SQ.FT.):		19.6	
MODEL:	RWS										SPECIES FACTOR(Kc):		0.3	
PSI:	30										MICROCLIMATE FACTOR(Kmc):		1	
GPM OF BUBBLER:	0.25										DENSITY FACTOR(Kd):		1	
NO. OF BUBBLERS:	1										IRRIGATION EFFICIENCY:		0.81	
GPM OF ALL BUBBLER(S):	0.25										SOIL INFILTRATION RATE(INCHES):		0.2	
TREE CANOPY(FT.):	5										YEAR 2 REDUCTION AMOUNT(%):		10	
	MONTH	JAN	FEB	MAR	APR	MAY	JUNE	JULY	AUG	SEP	OCT	NOV	DEC	TOTAL
ADJUSTED ETO/MONTH(INCHES)		1.0	1.5	2.9	4.5	6.1	7.1	7.9	6.7	5.2	3.2	1.4	0.7	48.3
ADJUSTED ETO/WEEK(INCHES)		0.2	0.3	0.7	1.0	1.4	1.6	1.8	1.5	1.2	0.7	0.3	0.2	
MINUTES PER WEEK	YEAR 1	5	7	13	19	26	30	33	28	22	14	6	3	
	YEAR 2	5	7	12	18	24	27	30	26	20	13	6	3	
DAYS PER WEEK	YEAR 1	1	1	2	2	3	3	3	3	3	3	2	1	
	YEAR 2	1	1	2	2	3	3	3	3	3	3	2	1	
MINUTES OF WATER PER DAY	YEAR 1	5	7	7	10	9	10	11	10	8	5	3	3	
	YEAR 2	5	7	7	9	9	9	10	9	8	5	3	3	
CYCLES PER DAY TO MEET SOIL INFILTRATION RATE	YEAR 1	2	2	2	3	3	3	3	3	2	2	1	1	
	YEAR 2	2	2	2	3	3	3	3	3	2	2	1	1	
MAX. RUN TIME (MINUTES) PER CYCLE	YEAR 1	3	4	4	4	3	4	4	4	4	3	3	3	
	YEAR 2	3	4	4	3	3	3	4	3	4	3	3	3	

BUBBLER IRRIGATION @ TREES – MEDIUM WATER USE

MANUFACTURER:	RAIN BIRD										TREE CANOPY(SQ.FT.):		19.6	
MODEL:	RWS										SPECIES FACTOR(Kc):		0.5	
PSI:	30										MICROCLIMATE FACTOR(Kmc):		1	
GPM OF BUBBLER:	0.25										DENSITY FACTOR(Kd):		1	
NO. OF BUBBLERS:	1										IRRIGATION EFFICIENCY:		0.81	
GPM OF ALL BUBBLER(S):	0.25										SOIL INFILTRATION RATE(INCHES):		0.2	
TREE CANOPY(FT.):	5										YEAR 2 REDUCTION AMOUNT(%):		10	
	MONTH	JAN	FEB	MAR	APR	MAY	JUNE	JULY	AUG	SEP	OCT	NOV	DEC	TOTAL
ADJUSTED ETO/MONTH(INCHES)		1.0	1.5	2.9	4.5	6.1	7.1	7.9	6.7	5.2	3.2	1.4	0.7	48.3
ADJUSTED ETO/WEEK(INCHES)		0.2	0.3	0.7	1.0	1.4	1.6	1.8	1.5	1.2	0.7	0.3	0.2	
MINUTES PER WEEK	YEAR 1	7	11	21	31	42	49	54	46	36	22	10	5	
	YEAR 2	7	10	19	28	38	45	49	42	33	20	9	5	
DAYS PER WEEK	YEAR 1	1	1	2	2	3	3	3	3	3	3	2	1	
	YEAR 2	1	1	2	2	3	3	3	3	3	3	2	1	
MINUTES OF WATER PER DAY	YEAR 1	7	11	11	16	14	17	18	16	12	8	5	5	
	YEAR 2	7	10	10	15	13	16	17	15	11	8	5	5	
CYCLES PER DAY TO MEET SOIL INFILTRATION RATE	YEAR 1	2	2	2	3	3	3	3	3	2	2	1	1	
	YEAR 2	2	2	2	3	3	3	3	3	2	2	1	1	
MAX. RUN TIME (MINUTES) PER CYCLE	YEAR 1	4	6	6	6	5	6	6	6	4	5	5		
	YEAR 2	4	5	5	5	5	6	6	5	6	4	5	5	

SUBSURFACE DRIPLINE – LOW WATER USE – 18" EMITTER SPACING

MANUFACTURER:	TORO										SPECIES FACTOR(Kc):		0.3	
MODEL:	DL2000										MICROCLIMATE FACTOR(Kmc):		1.0	
PSI:	30										DENSITY FACTOR(Kd):		1	
EMITTER SPACING (IN.):	18										IRRIGATION EFFICIENCY:		0.81	
ROW SPACING(IN.):	16										SOIL INFILTRATION RATE(INCHES):		0.2	
EMITTER GPH:	0.5										YEAR 2 REDUCTION AMOUNT (%):		10	
PR RATE(IN./HR.):	0.4													
	MONTH:	JAN	FEB	MAR	APR	MAY	JUNE	JULY	AUG	SEP	OCT	NOV	DEC	TOTAL
ADJUSTED ETO/MONTH(INCHES)		1.0	1.5	2.9	4.5	6.1	7.1	7.9	6.7	5.2	3.2	1.4	0.7	48.3
ADJUSTED ETO/WEEK(INCHES)		0.2	0.3	0.7	1.0	1.4	1.6	1.8	1.5	1.2	0.7	0.3	0.2	
MINUTES PER WEEK	YEAR 1	13	20	37	57	77	89	99	84	66	41	18	9	
	YEAR 2	12	18	34	52	70	81	90	76	60	37	17	9	
DAYS PER WEEK	YEAR 1	1	1	2	2	4	4	4	4	4	3	2	1	
	YEAR 2	1	1	2	2	4	4	4	4	4	3	2	1	
MINUTES OF WATER PER DAY	YEAR 1	13	20	19	29	20	23	25	21	17	14	9	9	
	YEAR 2	12	18	18	27	18	21	23	19	16	13	9	9	
CYCLES PER DAY TO MEET SOIL INFILTRATION RATE	YEAR 1	2	2	2	3	2	3	3	2	2	2	1	1	
	YEAR 2	2	2	2	3	2	3	3	2	2	2	1	1	
MAX. RUN TIME (MINUTES) PER CYCLE	YEAR 1	7	10	10	10	10	8	9	11	9	7	9	9	
	YEAR 2	6	9	9	9	9	7	8	10	8	7	9	9	

BUBBLER IRRIGATION @ SHRUBS – LOW WATER USE

MANUFACTURER:	RAIN BIRD										SHRUB CANOPY(SQ.FT.):		3.1	
MODEL:	1401										SPECIES FACOR(Kc):		0.3	
PSI:	30										MICROCLIMATE FACTOR(Kmc):		1	
GPM OF BUBBLER:	0.25										DENSITY FACTOR(Kd):		1	
NUMBER OF BUBBLERS:	1										IRRIGATION EFFICIENCY:		0.81	
GPM OF ALL BUBBLER(S):	0.25										SOIL INFILTRATION RATE(INCHES):		0.2	
SHRUB CANOPY(FT.):	2										YEAR 2 REDUCTION AMOUNT(%):		10	
	MONTH	JAN	FEB	MAR	APR	MAY	JUNE	JULY	AUG	SEP	OCT	NOV	DEC	TOTAL
ETO/YEAR(INCHES)		1.0	1.5	2.9	4.5	6.1	7.1	7.9	6.7	5.2	3.2	1.4	0.7	48.3
ETO/MONTH(INCHES)		0.2	0.3	0.7	1.0	1.4	1.6	1.8	1.5	1.2	0.7	0.3	0.2	
MINUTES PER WEEK	YEAR 1	1	2	2	3	5	5	6	5	4	3	1	1	
	YEAR 2	1	2	2	3	5	5	6	5	4	3	1	1	
DAYS PER WEEK	YEAR 1	1	1	2	2	3	3	3	3	3	3	2	1	
	YEAR 2	1	1	2	2	3	3	3	3	3	3	2	1	
MINUTES OF WATER PER DAY	YEAR 1	1	2	1	2	2	2	2	2	2	1	1	1	
	YEAR 2	1	2	1	2	2	2	2	2	2	1	1	1	
CYCLES PER DAY TO MEET SOIL INFILTRATION RATE	YEAR 1	2	2	2	3	3	3	3	3	2	2	1	1	
	YEAR 2	2	2	2	3	3	3	3	3	2	2	1	1	
MAX. RUN TIME (MINUTES) PER CYCLE	YEAR 1	1	1	1	1	1	1	1	1	1	1	1	1	
	YEAR 2	1	1	1	1	1	1	1	1	1	1	1	1	

JDE
JAMES D. EDDY ASSOCIATES
LANDSCAPE IRRIGATION ENGINEERS
P.O. BOX 2291
DANVILLE, CALIFORNIA 94526
P:(925) 867-3339
EMAIL: JDE@EDDYASSOCIATES.COM
PLANNING - DESIGN - MANAGEMENT
JDE PROJECT NO: 18022

IRRIGATION DESIGNER:
James D. Eddy
JAMES D. EDDY ASSOCIATES, DANVILLE, CALIFORNIA
NOTE: NO LICENSE FOR THE LANDSCAPE IRRIGATION SYSTEM DESIGN PROFESSION IS AVAILABLE IN THE STATE OF CALIFORNIA.
MEMBER: AMERICAN SOCIETY OF IRRIGATION CONSULTANTS

QUATTROCCHI KWOK ARCHITECTS
Main Office:
636 Fifth Street, Santa Rosa, CA 95404
Pleasanton Office:
600 Main Street, Suite E,
Pleasanton, CA 94566
(707) 576-0829

GSM landscape architects, inc.
1700 Soscol Ave. Suite 23
Napa, CA 94559
707-255-4630
www.gsmlainc.com

REGISTERED LANDSCAPE ARCHITECT STEPHEN W. STRANZL No. 2790 Exp. 10–31–20 STATE OF CALIFORNIA

FREEDOM HIGH SCHOOL

PERFORMING ARTS AND CTE FACILITIES

1050 Neroly Rd
Oakley, CA 94561

Liberty Union High School District

ARCH PROJECT NO:	1739.00
DRAWN BY:	JMH/HDJ
DRAWING SCALE:	AS SHOWN
PTN:	61721-0068

BID SET

AUGUST 13, 2019

SHEET TITLE

IRRIGATION DETAILS & SCHEDULES

SHEET NUMBER

L3.3

RECYCLED WATER ITEMS:
R1. VALVE BOX AND LID COLOR: RECYCLED WATER PURPLE
R2. RECYCLED WATER TAG – ATTACH TO VALVE WITH A PLASTIC ZIP TIE.

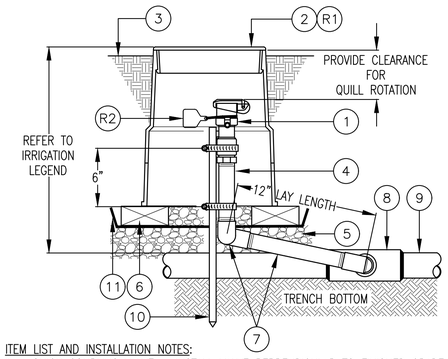

ITEM LIST AND INSTALLATION NOTES:
1. QUICK COUPLING VALVE – INSTALL VALVE PERPENDICULAR TO FINISHED GRADE UNLESS FIELD CONDITIONS REQUIRE ADJUSTMENT. INSTALL IN OUT-OF-PLAY OR PEDESTRIAN ACCESS AREAS. UNLESS OTHERWISE NOTED, FITTINGS ARE THE SAME IPT SIZE AS THE VALVE IPT INLET THREAD SIZE.
2. PLASTIC VALVE BOX AND LID, 10" ROUND, BOLT-DOWN LID – INSTALL VALVE BOX FLUSH WITH FINISH GRADE IN TURF AND 1" ABOVE FINISH GRADE IN SHRUB AREAS
3. FINISH GRADE OR TOP OF MULCH
4. PVC SCH 80 NIPPLE (LENGTH AS REQUIRED)
5. CRUSHED GRAVEL BASE, 6" DEEP
6. COMMON BRICK, 2 TOTAL, 180 DEGREES APART
7. SWING JOINT ASSEMBLY:
   A. FINGER TIGHTEN O-RING JOINTS AND BACK-OFF ONE FULL TURN TO ALLOW FOR SWING ACTION.
   B. PROVIDE 12" BETWEEN CENTER LINES OF ELBOWS ON SWING ARM.
   C. INSTALL THE SWING JOINT LAY ARM AT AN ANGLE BETWEEN 30° AND 45° OF THE LATERAL IN ORDER TO ABSORB DOWNWARD IMPACT.
   D. SWING JOINT MANUFACTURER: RAIN BIRD SWJ SERIES, 1" DURA STANDARD UNI-BODY MODEL 1-A2-2-1-12, OR APPROVED EQUAL.
8. TEE, ELBOW OR SADDLE CONNECTION (PER MAIN LINE FITTING SPECIFICATIONS)
9. MAIN LINE PIPE, (MATERIAL AND TYPE PER LEGEND AND SPECIFICATIONS)
10. #4 X 24" REBAR STAKE W/STAINLESS STEEL GEAR CLAMPS OR EQUIVALENT SUPPORT SYSTEM
11. METAL WIRE MESH TO PREVENT GOPHER INTRUSION, 1/2" MESH, 19 GA, GALVANIZED

1 QUICK COUPLING VALVE IN LANDSCAPED AREAS
NOT TO SCALE

DO NOT COPY WITHOUT WRITTEN PERMISSION OF JDE © '99

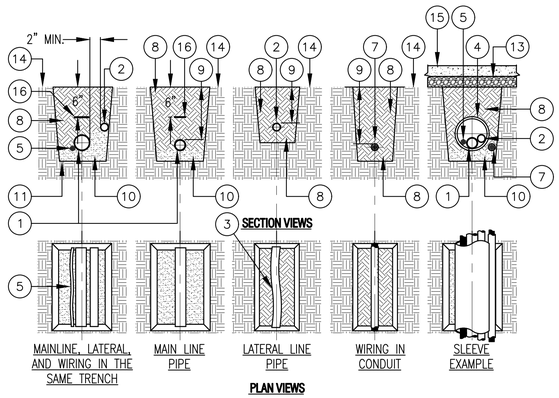

PLAN VIEWS

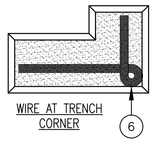

ITEM LIST AND INSTALLATION NOTES:
1. MAIN LINE PIPE; PROVIDE A MINIMUM OF 2" BETWEEN ALL PIPES.
2. LATERAL LINE PIPE; PROVIDE A MINIMUM OF 2" BETWEEN ALL PIPES.
3. SNAKE SOLVENT WELD PLASTIC PIPING IN TRENCH AS SHOWN.
4. SLEEVE BELOW ALL HARDSCAPE ELEMENTS WITH SLEEVING TWICE THE DIAMETER OF THE PIPE OR WIRE BUNDLE WITHIN.
5. WIRE BUNDLE: INSTALL WIRING BENEATH AND BESIDE MAIN LINE. TAPE AND BUNDLE AT 10-FOOT INTERVALS.
6. TIE A 24-INCH LOOP IN WIRING AT CHANGES OF DIRECTION OF 30° OR GREATER. UNTIE AFTER ALL CONNECTIONS HAVE BEEN MADE.
7. LOW VOLTAGE WIRE CONDUIT (WHERE SPECIFIED).
8. CLEAN BACKFILL PER THE SPECIFICATIONS, TYPICAL.
9. FOR PIPE, SLEEVE AND WIRE BURIAL DEPTHS, REFER TO IRRIGATION LEGEND AND SPECIFICATIONS.
10. PROVIDE A SAND BED FOR PIPE.
11. TRENCH BOTTOM OF UNDISTURBED SOIL, TYPICAL.
12. WHERE BORING UNDER EXISTING PAVEMENT IS REQUIRED – REFER TO DRAWINGS FOR SPECIFIC INFORMATION.
13. PAVEMENT AND SUBGRADE
14. FINISH GRADE
15. PAVED OR CONCRETE SURFACE
16. DETECTABLE WARNING TAPE PER SPECIFICATIONS

2 TRENCH
NOT TO SCALE

DO NOT COPY WITHOUT WRITTEN PERMISSION OF JDE © '99

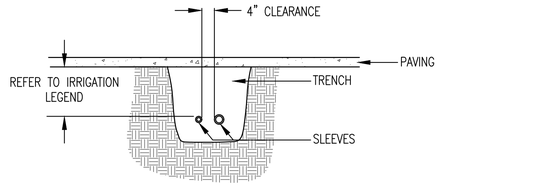

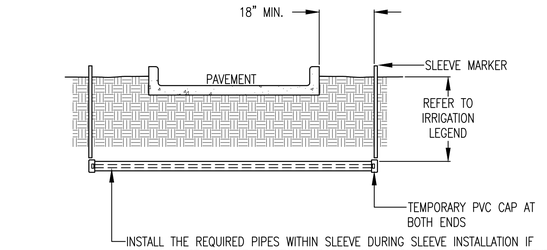

NOTES:
1. IRRIGATION SLEEVES TO BE PVC CLASS 200 OR SCH 40 PIPE. USE THE PIPE WITH THE THICKEST WALL DIMENSION.
2. JOINTS TO BE SOLVENT WELDED AND WATERTIGHT.
3. IF PIPING IS TO BE INSTALLED AFTER SLEEVING IS BACKFILLED, MARK SLEEVE LOCATION WITH A T. CHRISTY ENTERPRISES FIBERGLASS COMPOSITE MARKING POST, LABELED "IRRIGATION", EXPOSED AT GRADE, MODEL #ID-SF66-IRR.
4. MECHANICALLY TAMP BACKFILL TO 95% COMPACTION.
5. INSTALL SLEEVES LEVEL AND AFTER PIPE INSTALLATION, SEAL ENDS OF PIPE WITH GROUT TO PREVENT ROOT INTRUSION INTO THE SLEEVE.

3 SLEEVE INSTALLATION
NOT TO SCALE

DO NOT COPY WITHOUT WRITTEN PERMISSION OF JDE © '99

INSTALLATION NOTES:
1. INSTALL QUANTITY OF BUBBLERS PER LEGEND, SEE SHEET L3.1.
2. INSTALL DEEP WATERING TUBE ADJACENT AND AGAINST THE ROOTBALL.

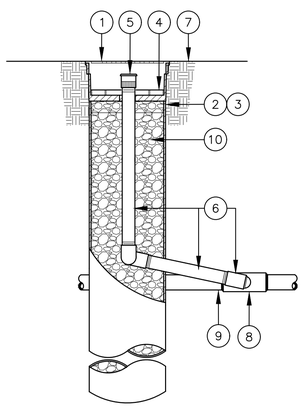

1. ROOT WATERING SYSTEM: RAIN BIRD RWS-BG (INCLUDES CANISTER, BUBBLER WITH SWING JOINT RISER AND GRATE)
2. 4" BASKET WEAVE CANISTER* –PLACE AGAINST TREE ROOTBALL
3. RAIN BIRD RWS SOCK*
4. 4" GRATE*
5. BUBBLER*
6. RAIN BIRD SWING JOINT RISER ASSEMBLY*
7. FINISH GRADE
8. PVC SCH 40 TEE OR ELL
9. LATERAL PIPE
10. PLACE DRAIN ROCK INSIDE THE CANISTER FROM UNDER THE BUBBLER PLATE TO THE BOTTOM OF THE CANISTER

* RAIN BIRD ROOT WATERING SYSTEM INCLUDES CANISTER, BUBBLER, SWING JOINT RISER, SOCK AND PURPLE GRATE

4 TREE DEEP ROOT WATERING SYSTEM
NOT TO SCALE

DO NOT COPY WITHOUT WRITTEN PERMISSION OF JDE © '99

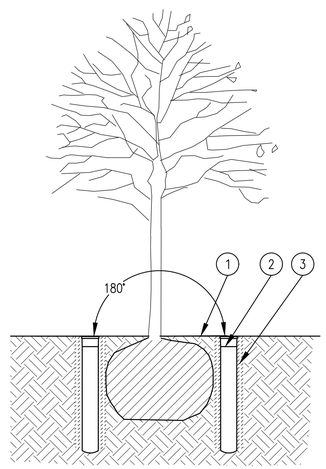

1. FINISH GRADE
2. ROOT WATERING SYSTEM: RAIN BIRD RWS-BCG (INCLUDES BUBBLER, CHECK VALVE AND GRATE)
3. RAIN BIRD RWS SOCK

NOTES:
1. WHERE TWO UNITS ARE SPECIFIED, POSITION UNITS SPACED AT 180 DEGREES AROUND ROOT BALL.
2. INSTALL PRODUCT WITH TOP GRATE EVEN WITH GROUND SURFACE.

5 TREE WATERING SYSTEM
NOT TO SCALE

DO NOT COPY WITHOUT WRITTEN PERMISSION OF JDE © '99

RECYCLED WATER ITEMS:
R1. RECYCLED WATER TAG – ATTACH TO FLEX RISER, USE T. CHRISTY ENTERPRISES RISER MARKER, MODEL #5100 WITH ADHESIVE BACKING.

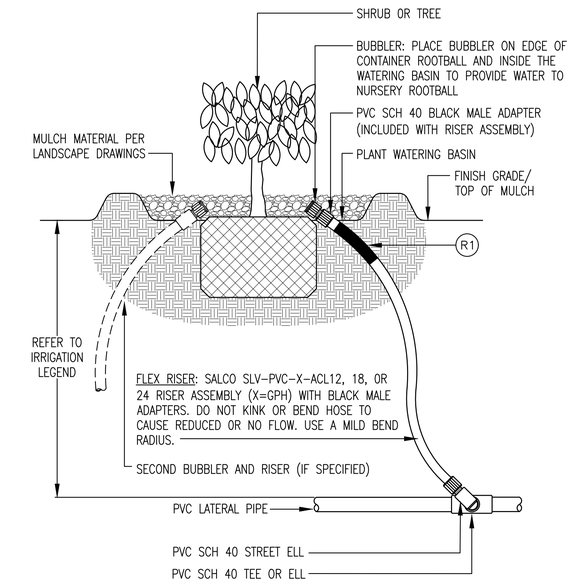

6 SHRUB OR TREE BUBBLER RISER
NOT TO SCALE

DO NOT COPY WITHOUT WRITTEN PERMISSION OF JDE © 1999

JDE
JAMES D. EDDY ASSOCIATES
LANDSCAPE IRRIGATION ENGINEERS
P.O. BOX 2291
DANVILLE, CALIFORNIA 94526
P:(925) 867-3339
EMAIL: JDE@EDDYASSOCIATES.COM
PLANNING - DESIGN - MANAGEMENT
JDE PROJECT NO: 18022

IRRIGATION DESIGNER:
JAMES D. EDDY ASSOCIATES, DANVILLE, CALIFORNIA
NOTE: NO LICENSE FOR THE LANDSCAPE IRRIGATION SYSTEM DESIGN PROFESSION IS AVAILABLE IN THE STATE OF CALIFORNIA.
MEMBER: AMERICAN SOCIETY OF IRRIGATION CONSULTANTS

QUATTROCCHI KWOK ARCHITECTS
Main Office:
636 Fifth Street, Santa Rosa, CA 95404
Pleasanton Office:
600 Main Street, Suite E,
Pleasanton, CA 94566
(707) 576-0829

GSM landscape architects, inc.
1700 Soscol Ave. Suite 23
Napa, CA 94559
707-255-4630
www.gsmlainc.com

REGISTERED LANDSCAPE ARCHITECT STEPHEN V. STRANZL No. 2790 Exp. 10-31-20 STATE OF CALIFORNIA

FREEDOM HIGH SCHOOL

PERFORMING ARTS AND CTE FACILITIES

1050 Neroly Rd
Oakley, CA 94561

Liberty Union High School District

ARCH PROJECT NO:	1739.00
DRAWN BY:	JMH/HDJ
DRAWING SCALE:	AS SHOWN
PTN:	61721-0068

BID SET

AUGUST 13, 2019

SHEET TITLE

IRRIGATION DETAILS

SHEET NUMBER

L3.4

JDE
JAMES D. EDDY ASSOCIATES
LANDSCAPE IRRIGATION ENGINEERS
P.O. BOX 2291
DANVILLE, CALIFORNIA 94526
P:(925) 867-3339
EMAIL: JDE@EDDYASSOCIATES.COM
PLANNING-DESIGN-MANAGEMENT
JDE PROJECT NO: 18022

IRRIGATION DESIGNER:
James D. Eddy
JAMES D. EDDY ASSOCIATES, DANVILLE, CALIFORNIA
NOTE: NO LICENSE FOR THE LANDSCAPE IRRIGATION SYSTEM DESIGN PROFESSION IS AVAILABLE IN THE STATE OF CALIFORNIA.
MEMBER: AMERICAN SOCIETY OF IRRIGATION CONSULTANTS

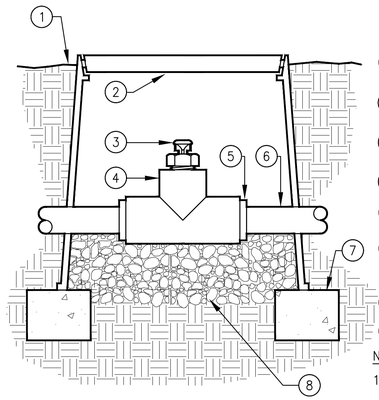

SECTION/ELEVATION

1. FINISHED GRADE
2. 6" ROUND VALVE BOX
3. TORO DL2000 AIR/VACUUM RELIEF VALVE (YD-500-34)
4. 1/2" PVC TEE (SxSxT)
5. TORO DL2000 COMPRESSION ADAPTER (CA710) (TYP.)
6. TORO DL2000 DRIPLINE OR BLANK TUBING
7. HALF BRICK SUPPORTS
8. CRUSHED GRAVEL SUMP (6")

NOTES:
1. AIR/VACUUM RELIEF VALVE CANNOT BE CONNECTED LOWER THAN DRIPLINE LATERALS.
2. USE ONE FOR EACH INCREMENT OF 7 GPM.

1 1/2" AIR/VACUUM RELIEF VALVE (TORO DL2000)
NOT TO SCALE

DO NOT COPY WITHOUT WRITTEN PERMISSION OF JDE © MM

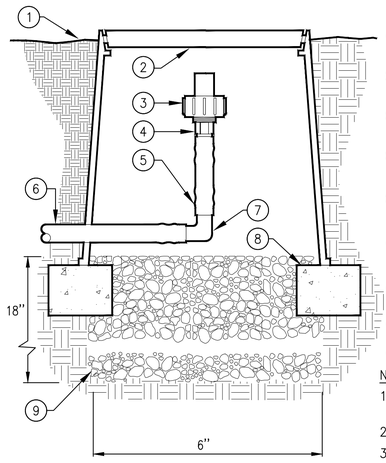

SECTION/ELEVATION

1. FINISHED GRADE
2. 6" ROUND VALVE BOX
3. TORO DL2000 AUTOMATIC FLUSH VALVE (FCH-H)
4. TORO DL2000 3/4" MALE ADAPTER (DL-75MA-9153)
5. TORO DL2000 BLANK TUBING (A710)
6. TORO DL2000 DRIPLINE
7. TORO DL2000 BARBED ELBOW (DL-E-9018)
8. HALF BRICK SUPPORTS
9. CRUSHED GRAVEL SUMP (18")

NOTES:
1. USE ONE FOR EACH INCREMENT OF 7 GPM.
2. FLUSH RATE = 0.8 GPM
3. SEALING PRESSURE = 2 PSI

2 AUTOMATIC FLUSH VALVE (TORO DL2000)
NOT TO SCALE

DO NOT COPY WITHOUT WRITTEN PERMISSION OF JDE © MM

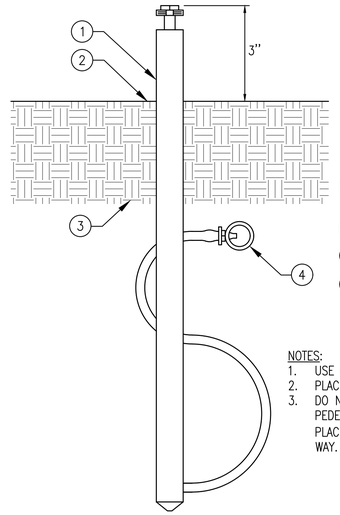

SECTION/ELEVATION

1. TORO DL2000 OPERATION INDICATOR (DL-MP9)
2. FINISHED GRADE
3. APPROVED BACKFILL
4. TORO DL2000 DRIPLINE (RGX-XXX-XX) (SEE SPECS. FOR DEPTH)

NOTES:
1. USE ONE PER DRIPPERLINE ZONE.
2. PLACE AT FLUSH END OF ZONE.
3. DO NOT INSTALL IN AN AREA OF PEDESTRIAN OR VEHICULAR TRAFFIC. PLACE IN AN AREA OUT OF HARM'S WAY.

3 OPERATION INDICATOR - TORO DL 2000
NOT TO SCALE

DO NOT COPY WITHOUT WRITTEN PERMISSION OF JDE © MM

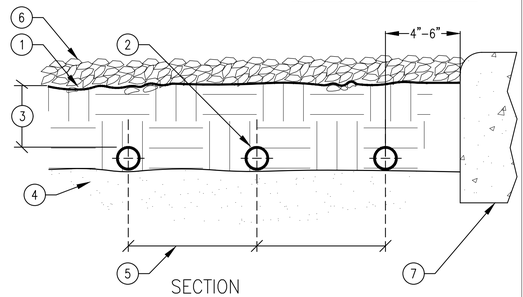

SECTION

1. FINISHED GRADE
2. TORO DL2000 DRIPLINE (TYP.)
3. DEPTH OF TORO DL2000 DRIPLINE = 3"-4"
4. SUB-GRADE NATIVE SOIL. REMOVE ALL ROCKS OR JAGGED MATERIAL TO PROTECT TUBING.
5. TORO DL2000 DRIPLINE LATERAL SPACING, SEE LEGEND FOR DISTANCE.
6. MULCH - SEE LANDSCAPE DRAWINGS
7. CURB, WALK, WALL, OR DRIVEWAY - SEE LANDSCAPE DRAWINGS

4 SUB-GRADE LATERAL - TORO DL2000
NOT TO SCALE

DO NOT COPY WITHOUT WRITTEN PERMISSION OF JDE © MM

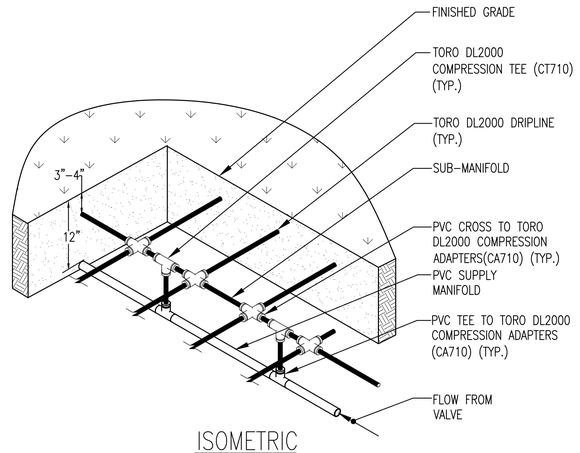

ISOMETRIC

NOTES:
1. REFER TO DRAWINGS, IRRIGATION LEGEND AND SPECIFICATIONS FOR ADDITIONAL INFORMATION.
2. PLANT TREES BETWEEN DRIPPERLINE TUBES.
3. INSTALL DRIPPERLINE 3"-4" BELOW FINISHED GRADE AND STAKE DRIPPERLINE EVERY 4' OR AS NECESSARY TO SECURE THE TUBING FROM MOVEMENT.
4. USE ONLY TORO COMPRESSION FITTINGS WITH TORO DRIPPERLINE TUBING.
5. INSTALL FITTINGS TO TUBING AS DIRECTED BY MANUFACTURER.

5 CENTER FEED MANIFOLD
NOT TO SCALE

DO NOT COPY WITHOUT WRITTEN PERMISSION OF JDE © MM

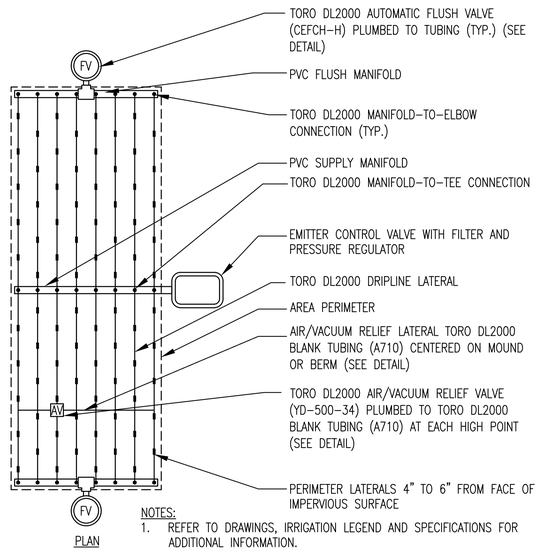

PLAN

NOTES:
1. REFER TO DRAWINGS, IRRIGATION LEGEND AND SPECIFICATIONS FOR ADDITIONAL INFORMATION.
2. PLANT TREES BETWEEN DRIPPERLINE TUBES.
3. INSTALL DRIPPERLINE 3"-4" BELOW FINISHED GRADE AND STAKE DRIPPERLINE EVERY 4' OR AS NECESSARY TO SECURE THE TUBING FROM MOVEMENT.
4. USE ONLY TORO COMPRESSION FITTINGS WITH TORO DRIPPERLINE TUBING.
5. INSTALL FITTINGS TO TUBING AS DIRECTED BY MANUFACTURER.

6 CENTER FEED LAYOUT
NOT TO SCALE

DO NOT COPY WITHOUT WRITTEN PERMISSION OF JDE © MM

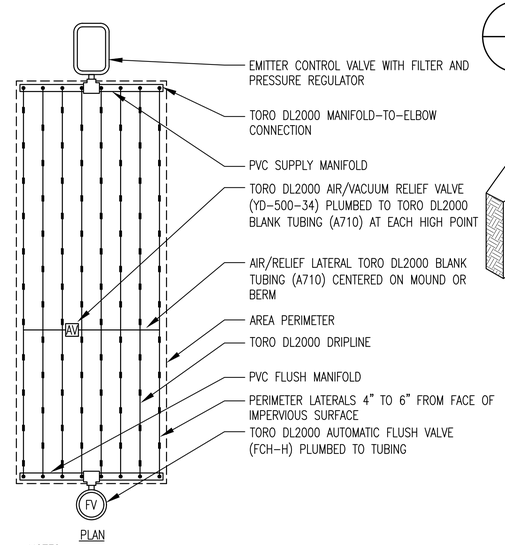

PLAN

NOTES:
1. REFER TO DRAWINGS, IRRIGATION LEGEND AND SPECIFICATIONS FOR ADDITIONAL INFORMATION.
2. PLANT TREES BETWEEN DRIPPERLINE TUBES.
3. INSTALL DRIPPERLINE 3"-4" BELOW FINISHED GRADE AND STAKE DRIPPERLINE EVERY 4' OR AS NECESSARY TO SECURE THE TUBING FROM MOVEMENT.
4. USE ONLY TORO COMPRESSION FITTINGS WITH TORO DRIPPERLINE TUBING.
5. INSTALL FITTINGS TO TUBING AS DIRECTED BY MANUFACTURER.

7 END FEED LAYOUT
NOT TO SCALE

DO NOT COPY WITHOUT WRITTEN PERMISSION OF JDE © MM

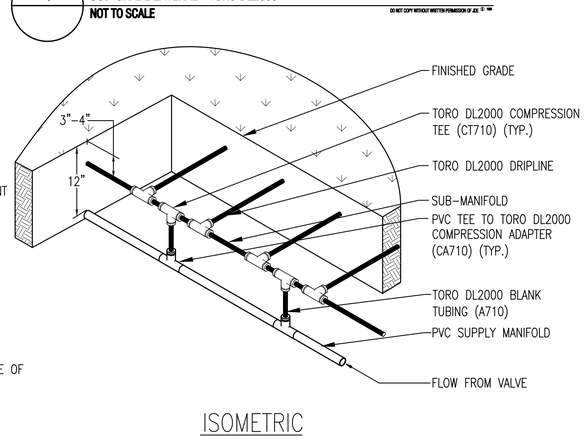

ISOMETRIC

NOTES:
1. REFER TO DRAWINGS, IRRIGATION LEGEND AND SPECIFICATIONS FOR ADDITIONAL INFORMATION.
2. PLANT TREES BETWEEN DRIPPERLINE TUBES.
3. INSTALL DRIPPERLINE 3"-4" BELOW FINISHED GRADE AND STAKE DRIPPERLINE EVERY 4' OR AS NECESSARY TO SECURE THE TUBING FROM MOVEMENT.
4. USE ONLY TORO COMPRESSION FITTINGS WITH TORO DRIPPERLINE TUBING.
5. INSTALL FITTINGS TO TUBING AS DIRECTED BY MANUFACTURER.

8 END FEED MANIFOLD
NOT TO SCALE

DO NOT COPY WITHOUT WRITTEN PERMISSION OF JDE © MM

THESE DETAILS ARE SPECIFIC TO BURIED TORO DRIPPERLINE TUBING

QUATTROCCHI KWOK ARCHITECTS
Main Office:
636 Fifth Street, Santa Rosa, CA 95404
Pleasanton Office:
600 Main Street, Suite E,
Pleasanton, CA 94566
(707) 576-0829

GSM landscape architects, inc.
1700 Soscol Ave. Suite 23
Napa, CA 94559
707-255-4630
www.gsmlainc.com

REGISTERED LANDSCAPE ARCHITECT
STEPHEN STRANZL
No. 2790
Exp. 10-31-20
STATE OF CALIFORNIA

FREEDOM HIGH SCHOOL

PERFORMING ARTS AND CTE FACILITIES

1050 Neroly Rd
Oakley, CA 94561

Liberty Union High School District

ARCH PROJECT NO:	1739.00
DRAWN BY:	JMH/HDJ
DRAWING SCALE:	AS SHOWN
PTN:	61721-0068

BID SET

AUGUST 13, 2019

SHEET TITLE

IRRIGATION DETAILS

SHEET NUMBER

L3.5

LEEMCO FITTING & JOINT RESTRAINT CONSTRUCTION DETAILS (also refer to the Leemco's current guidelines and recommendations)

LEEMCO JOINT RESTRAINTS DISTANCE TABLES:

SIZE REDUCTION, REDUCERS

TABLES BELOW SHOW "L" DISTANCES IN FEET. WHEN AN ADJACENT JOINT TO A REDUCER OR A REDUCING TEE IS WITHIN THIS DISTANCE, OTHER JOINTS ON THE LARGER DIAMETER END MUST BE RESTRAINED.

TABLE VALUES ARE LISTED FOR 125 PSI LINE PRESSURE.

TABLE VALUES ARE BASED ON TYPE 3 TRENCHING AND COMPACTNESS METHOD, 30" COVER AND A SAFETY FACTOR OF 2. DESIGN COVER IS 36".

BENDS, DEAD ENDS

TABLES BELOW SHOW "L" DISTANCES. WHEN AN ADJACENT JOINT TO A BEND IS WITHIN THIS DISTANCE, THE JOINT MUST BE RESTRAINED. FOR BENDS ADJACENT JOINTS ON BOTH SIDES OF THE BEND REQUIRE RESTRAINTS. USE THE 90-DEGREE BEND VALUES FOR THE SIDE (BRANCH) OUTLET OF TEE'S.

TABLE VALUES ARE LISTED FOR 125 PSI LINE PRESSURES.

TABLE VALUES ARE BASED ON TYPE 3 TRENCHING AND COMPACTNESS METHOD, 30" COVER AND A SAFETY FACTOR OF 2. DESIGN COVER IS 36".

SANDY-CLAY SOIL MIXTURE

TABLE A-125 PSI LINE PRESSURE

PIPE SIZE	DEGREE OF BEND				DEAD END
	11°	22°	45°	90°	
	DISTANCE IN FEET				
3"	2	3	5	11	30
4"	2	4	9	20	45
6"	3	6	13	29	63

SANDY-CLAY SOIL MIXTURE

SIZE REDUCTION	TABLE A-125 PSI LINE PRESSURE DISTANCE IN FEET
3 x 2	10
3 x 2.5	8
4 x 2	31
4 x 2.5	20
4 x 3	14

NOTE: ALL DI FITTINGS SHALL BE WRAPPED COMPLETELY WITH T. CHRISTY POLYETHYLENE FITTING WRAP SECURED WITH CHRISTY 'S PIPE WRAP TAPE.

JDE
JAMES D. EDDY ASSOCIATES
LANDSCAPE IRRIGATION ENGINEERS
P.O. BOX 2291
DANVILLE, CALIFORNIA 94526
P:(925) 867-3339
EMAIL: JDE@EDDYASSOCIATES.COM
PLANNING-DESIGN-MANAGEMENT
JDE PROJECT NO: 18022

IRRIGATION DESIGNER:
James D. Eddy
JAMES D. EDDY ASSOCIATES, DANVILLE, CALIFORNIA
NOTE: NO LICENSE FOR THE LANDSCAPE IRRIGATION SYSTEM DESIGN PROFESSION IS AVAILABLE IN THE STATE OF CALIFORNIA.
MEMBER: AMERICAN SOCIETY OF IRRIGATION CONSULTANTS

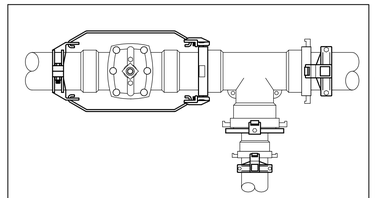

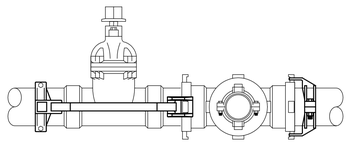

FIG. 1. TOP AND SIDE VIEW OF THE RESTRAINED GATE VALVE. THE SB-LK7 LINKS BOLT ONTO THE LUGS OF THE FITTING. THE RESTRAINT BARS SPAN ACROSS THE VALVE AND ATTACH TO THE JOINT RESTRAINT SECURED TO THE PIPE.

THE ARRANGEMENT ON THE LEFT IS THE METHOD OF RESTRAINING A GATE VALVE. THE SB-LK7 LINK SHOWN BELOW BOLTS ONTO THE LUG OF THE FITTING.

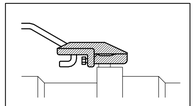

FIG. 2. SB-LK7 LINK BOLTS ONTO THE LUG OF DUCTILE IRON FITTING.

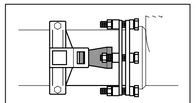

FIG. 3. THE LS-MJ LINK SHOWN HERE IS BE USED TO RESTRAIN ANY FLANGED PRODUCT SUCH AS A FLANGED GLOBE VALVE.

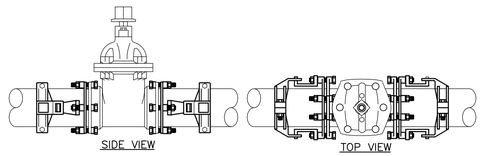

FIG. 4. THE LS-MJ LINKS ATTACH TO THE FLANGE OF AN MJ GATE VALVE OR A FLANGED DEVICE.

1 GATE VALVES, MJ & FLANGED CONNECTIONS

NOT TO SCALE

DO NOT COPY WITHOUT WRITTEN PERMISSION OF JDE © ™

NOTES:

1. ALTHOUGH A GATE VALVE ACTS AS A DEAD-END WHEN SHUT-OFF, THE CONNECTING PIPES ON BOTH SIDES OFFER RESISTANCE, ACT AS THRUST BLOCKS AND ELIMINATE THE NEED FOR RESTRAINING ADJACENT JOINTS.
2. THE ADJACENT JOINT TO A GATE VALVE WILL REQUIRE RESTRAINTS, WHEN IT IS WITHIN THE "L" DISTANCE OF A BEND, A REDUCER OR A DEAD END.
3. GATE VALVES LOCATED NEXT TO A TEE: USE LEEMCO LGK SERIES JOINT RESTRAINTS.

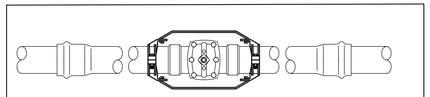

FIG. 1. A GATE VALVE ON A LONG MAIN LINES WITH NO BENDS OR REDUCERS IN CLOSE PROXIMITY DOES NOT REQUIRE THE ADJACENT JOINTS TO BE RESTRAINED.

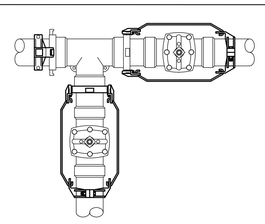

FIG. 2. GATE VALVE INSTALLATION

2 PUSH-ON GATE VALVES

NOT TO SCALE

DO NOT COPY WITHOUT WRITTEN PERMISSION OF JDE © ™

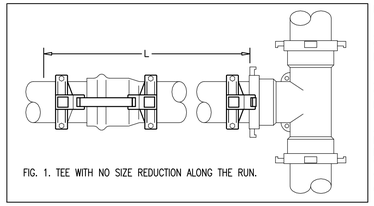

FIG. 1. TEE WITH NO SIZE REDUCTION ALONG THE RUN.

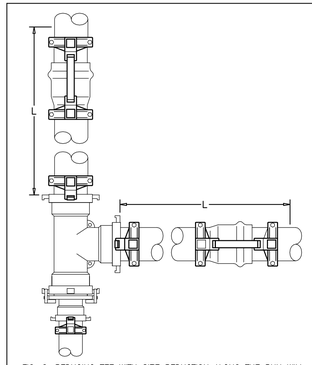

FIG. 2. REDUCING TEE WITH SIZE REDUCTION ALONG THE RUN WILL REQUIRE A JOINT RESTRAINT ON THE LARGER DIAMETER PIPE.

NOTES:

A BRANCH OF A TEE IS TREATED AS A 90-DEGREE BEND. DIRECTION OF FLOW IS NOT RELATIVE TO RESTRAINING A JOINT.

A BRANCH OF A TEE IS TREATED AS A 90-DEGREE BEND. DIRECTION OF FLOW IS NOT RELATIVE TO RESTRAINING A JOINT.

A TEE WITH NO SIZE REDUCTION ALONG THE RUN REQUIRES JOINT RESTRAINTS ONLY ON ITS BRANCH AS IN FIG. 1. JOINT RESTRAINTS WILL BE REQUIRED ALONG THE RUN ONLY WHEN THE TEE IS WITHIN THE "L" DISTANCE OF ANOTHER BEND OR A REDUCER.

USE THE DISTANCE TABLES FOR 90-DEGREE BENDS TO DETERMINE HOW MANY OTHER JOINTS ALONG THE BRANCH REQUIRE RESTRAINTS.

A TEE WITH A SIZE REDUCTION ALONG THE RUN REQUIRES JOINT RESTRAINTS ON THE TEE ITSELF AND ON OTHER JOINTS ALONG THE LARGER DIAMETER RUN AS ILLUSTRATED IN FIG. 2.

USE DISTANCE TABLES FOR REDUCERS TO DETERMINE HOW MANY OTHER JOINTS ALONG THE RUN REQUIRE RESTRAINTS.

3 TEE RESTRAINTS

NOT TO SCALE

DO NOT COPY WITHOUT WRITTEN PERMISSION OF JDE © ™

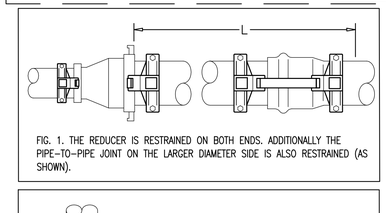

FIG. 1. THE REDUCER IS RESTRAINED ON BOTH ENDS. ADDITIONALLY THE PIPE-TO-PIPE JOINT ON THE LARGER DIAMETER SIDE IS ALSO RESTRAINED (AS SHOWN).

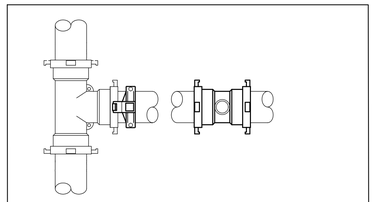

FIG. 2. SERVICE TEES INSTALLED OUTSIDE THE "L"DISTANCE OF A TEE REQUIRES NO JOINT RESTRAINTS.

NOTES:

RESTRAIN IN-LINE REDUCERS AND REDUCING TEE'S (ALONG THE RUN). ADDITIONALLY, THE NEXT JOINTS UPSTREAM (ON THE LARGER DIAMETER SIDE) MAY REQUIRE JOINT RESTRAINTS WHEN THESE JOINTS ARE WITHIN THE "L" DISTANCE OF THE REDUCER. REFER TO AND USE THE DISTANCE TABLE VALUES.

SERVICE TEES INSTALLED ON LONG MAIN LINES, AWAY FROM A BEND OR A REDUCER, DO NOT REQUIRE JOINT RESTRAINTS.

SERVICE TEES REQUIRE JOINT RESTRAINTS ONLY WHEN INSTALLED WITHIN THE "L" DISTANCE OF A BEND OR A REDUCER.

TAPPED (SERVICE) TEE'S DO NOT REQUIRE JOINT RESTRAINTS UNLESS THEY ARE WITHIN THE "L" DISTANCE FROM A RESTRAINED FITTING SUCH AS A BEND OR A REDUCER.

4 REDUCERS & TAPPED TEE'S

NOT TO SCALE

DO NOT COPY WITHOUT WRITTEN PERMISSION OF JDE © ™

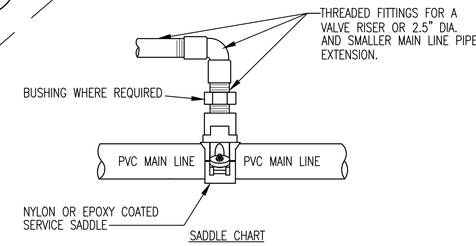

SADDLE CHART

NOMINAL PIPE DIA. (INCHES)	MAIN LINE AVERAGE O.D. (INCHES)	SADDLE MANUFACTURER
4	4.50	LEEMCO LTS SERIES; ROMAC 202N; SMITH-BLAIR 317; TAP SIZE AS REQUIRED TO MATCH TAP SIZE OF VALVE OR PIPE.
6	6.63	
8	8.63	
RECOMMENDED NUT TORQUE		
NUT SIZE	PVC PIPE	CI, DI, OR OTHER PIPE
1/2"	20 FT-LBS.	40-50 FT-LBS.
5/8"	30-40 FT-LBS.	60-70 FT-LBS.
3/4"		80-90 FT-LBS.

NOTES:

1. TIGHTEN NUTS EVENLY UNTIL SADDLE BODY CONFORMS SNUGLY TO PIPE. LOOSEN NUTS AND TORQUE AS INDICATED ABOVE OR BY MANUFACTURER.
2. FOR VALVE CONNECTION, USE TAP SIZE EQUAL TO THE VALVE.
3. FOR QUICK COUPLING VALVE CONNECTION, USE 1" FIPT TAP SIZE.
4. FOR AIR/VACUUM RELIEF VALVE CONNECTION, USE 1" FIPT TAP SIZE.
5. FOR 2.5" OR SMALLER MAIN LINE EXTENSION, USE TAP SIZE EQUAL TO MAIN LINE SIZE.
6. PROTECT THREADS FROM DISTORTING, SCREW THE CORPORATION STOP OR OTHER FITTING INTO THE SADDLE BODY PRIOR TO FINAL TIGHTENING.

8 SADDLE CONNECTION - 3" & 4" DIA. MAIN LINE (WHERE REQUIRED)

NOT TO SCALE

DO NOT COPY WITHOUT WRITTEN PERMISSION OF JDE © ™

NOTES:
1. A DEAD-END WILL REQUIRE SEVERAL UPSTREAM JOINTS TO BE RESTRAINED. REFER TO DISTANCE CHART FOR NUMBER OF UPSTREAM JOINTS TO BE RESTRAINED.
2. WHEN CROSSING A RAVINE, ROADWAY, OR A STREAM BED, USE JOINT RESTRAINTS ON ALL JOINTS TO PREVENT BUCKLING.

CAPPING, PLUGGING OR TERMINATING A LINE WITH A GATE VALVE CAUSES A DEAD-END.

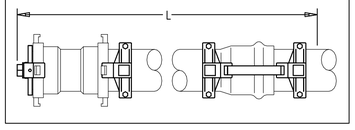

DEADEND RESTRAINT

RESTRAIN JOINTS IN VERTICAL OFFSETS SUCH AS CROSSING A RAVINE OR A BRIDGE.

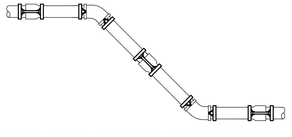

VIEWED LEFT TO RIGHT: ROAD OR RAVINE CROSSING.
VIEWED RIGHT TO LEFT: BRIDGE CROSSING.

BRIDGE, RAVINE, ROAD WAY CROSSING RESTRAINT

5 LEEMCO-DEADEND OR CROSSINGS

NOT TO SCALE

DO NOT COPY WITHOUT WRITTEN PERMISSION OF JDE © ™

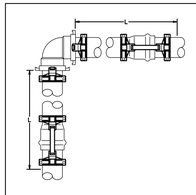

FIG. 1. 90 DEGREE BEND

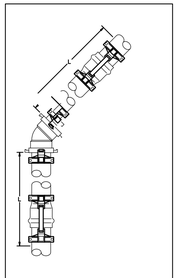

FIG. 2. 45 DEGREE ELBOW - IN SOME CASES THE ADJACENT JOINTS NEED RESTRAINTS.

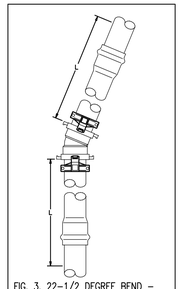

FIG. 3. 22-1/2 DEGREE BEND - NO NEED FOR ADJACENT RESTRAINTS.

NOTES:

BESIDES THE FITTING ITSELF, OTHER JOINTS ON BOTH SIDES OF A BEND MAY REQUIRE JOINT RESTRAINTS.

THE LARGER THE PIPE LINE SIZE, THE MORE JOINTS (ON BOTH SIDES) THAT HAVE TO BE RESTRAINED.
EXAMPLE: FOR A 90-BEND (FIG. 1) USING 125 PSI AND SANDY-CLAY SOIL, THE TABLE SHOWS:
3 INCH (90): "L"= 11 FEET,
6 INCH (90): "L"= 29 FEET,
8 INCH (90): "L"= 38 FEET.
WHEN USING 20-FOOT LENGTH PIPE, BECAUSE 20 FEET IS WITHIN THE "L" LENGTHS, ADJACENT JOINTS OF THE 6 INCH AND 8" MUST BE RESTRAINED AS SHOWN IN FIG. 1. THE ADJACENT JOINTS TO THE 3 INCH BEND DO NOT REQUIRE RESTRAINTS BECAUSE THEIR DISTANCE OF 20 FEET IS OUTSIDE THE "L" DIMENSION OF 11 FEET.

AS THE BEND ANGLE GETS SMALLER (FIG. 2 & 3) THE NEED TO RESTRAIN ADJACENT JOINTS DIMINISHES.

USING THE DISTANCE TABLES, ONLY THE 10 FOOT AND 12 FOOT 45-DEGREE BENDS REQUIRE THE ADJACENT JOINTS TO BE RESTRAINED. OTHER SIZES DO NOT REQUIRE THEM (BASED ON THE SAME PARAMETERS AS THE ABOVE EXAMPLE).

DISTANCE TABLES ARE GIVEN IN FEET FROM A BEND OR A REDUCER BECAUSE AT TIMES PIPE MAY BE SPLICED SHORTER THAN 20 FEET.

6 ELBOW RESTRAINTS

NOT TO SCALE

DO NOT COPY WITHOUT WRITTEN PERMISSION OF JDE © ™

USE DISTANCE TABLES TO DETERMINE NUMBER AND DISTANCE OF JOINT RESTRAINTS

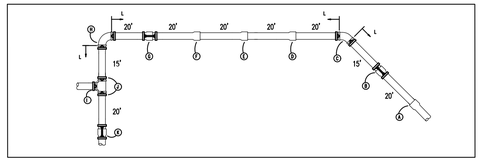

EXAMPLE 1: 8" PIPING SYSTEM
CRITERIA: SANDY-CLAY SOIL, 125 PSI

NOTE: ALL BENDS ARE RESTRAINED; JOINT "B" IS RESTRAINED BECAUSE IT'S DISTANCE OF 15 FEET AWAY FROM JOINT "C" (45 BEND) IS LESS THAN THE "L =15 FEET" (FROM TABLE VALUE). JOINT "D" IS NOT RESTRAINED BECAUSE IT'S DISTANCE OF 20 FEET FROM "C" IS FARTHER THAN TABLE VALUE OF 15 FEET.

JOINTS "J" (15 FEET), "K" (35 FEET), AND "G" (20 FEET) AWAY FROM 90-BEND "H" ARE ALL WITHIN THE 38 FEET ALLOWED DISTANCE "L" TABLE VALUE.

EXAMPLE 2: 12 INCH PIPING SYSTEM: WITH THE "L" TABLE VALUES OF 21 FEET FOR A 45 BEND AND 53 FEET FOR A 90-BEND, RESTRAIN JOINTS AS FOLLOWS:

JOINT A: WON'T REQUIRE A RESTRAINT BECAUSE ITS 35 FEET DISTANCE AWAY IS FURTHER OUT THAN 21-FOOT REQUIREMENT. JOINTS B & D: BOTH WITHIN 21 FEET OF "C" WILL NEED TO BE RESTRAINED.

JOINTS G,J.K ARE ALL WITHIN THE 53 FEET OF THE "H" (90-BEND).

7 WORKING WITH THE DISTANCE TABLES

NOT TO SCALE

DO NOT COPY WITHOUT WRITTEN PERMISSION OF JDE © ™

QUATTROCCHI KWOK ARCHITECTS
Main Office:
636 Fifth Street, Santa Rosa, CA 95404
Pleasanton Office:
600 Main Street, Suite E,
Pleasanton, CA 94566
(707) 576-0829

GSM landscape architects, inc.
1700 Soscol Ave. Suite 23
Napa, CA 94559
707-255-4630
www.gsmlainc.com

REGISTERED LANDSCAPE ARCHITECT
STEPHEN STRANZL
No. 2790
Exp. 10-31-20
STATE OF CALIFORNIA

FREEDOM HIGH SCHOOL

PERFORMING ARTS AND CTE FACILITIES

1050 Neroly Rd
Oakley, CA 94561

Liberty Union High School District

ARCH PROJECT NO:	1739.00
DRAWN BY:	JMH/HDJ
DRAWING SCALE:	AS SHOWN
PTN:	61721-0068

BID SET

AUGUST 13, 2019

SHEET TITLE

IRRIGATION DETAILS

SHEET NUMBER

L3.6

ASSEMBLY TO INCLUDE:
CONTROLLER MODEL AS SPECIFIED
ENCLOSURE MODEL AS SPECIFIED
OPTIONS AS SPECIFIED
TERMINAL STRIPS
TEMPLATE & BOLTS
UL LISTED 8' COPPER GROUND ROD GROUND ROD CLAMP
GROUND ROD CLAMP OR CADWELD

GROUNDING NOTE:
GROUND ROD SHALL BE LOCATED NO CLOSER THAN 8 FT. AND NO FURTHER THAN 12 FT. FROM THE CONTROLLER UNLESS OTHERWISE SPECIFIED.
INSTALL A 10 IN. ROUND VALVE BOX OVER THE GROUND ROD FOR LOCATION AND MAINTENANCE PURPOSES.

CABLE AND WIRE NOTE:
INSTALL ALL CABLES AND ELECTRICAL WIRES IN CONDUIT.

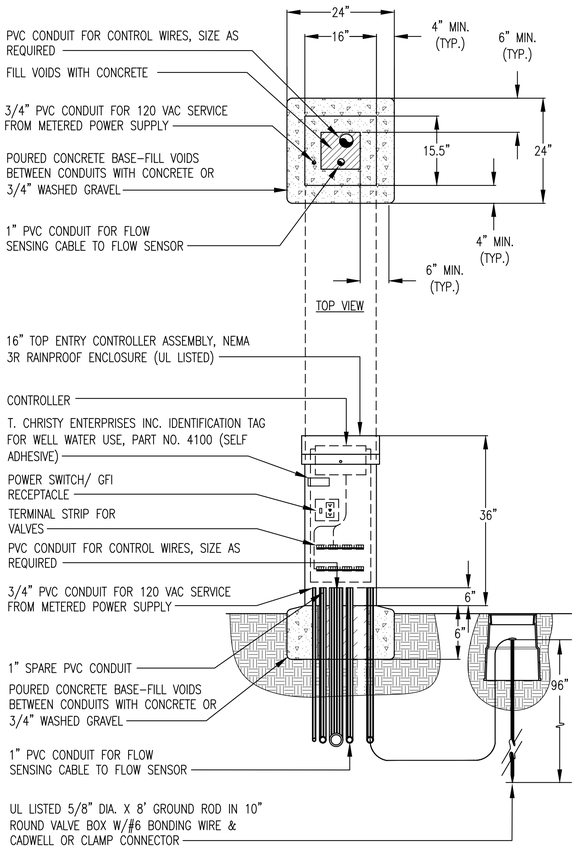

FRONT VIEW

NOTES:
1. ELECTRIC SERVICE TO CONTROLLER LOCATION IS PROVIDED UNDER THE ELECTRICAL CONTRACT WORK.
2. INSTALL ALL HIGH VOLTAGE CABLES AND ELECTRICAL WIRES IN UL APPROVED CONDUIT.
3. FOR ETHERNET COMMUNICATION FROM SATELLITE TO CENTRAL COMPUTER: CONFER WITH GREENTECH AS TO THE REQUIREMENT FOR THIS COMMUNICATION OPTION.
4. ALTERNATE FOR POURED CONCRETE BASE: VIT PRODUCTS "QUICK PAD", CHOOSE PAD FOR EXACT FIT TO CONTROLLER PEDESTAL.

1 **16" TOP ENTRY CONTROLLER ASSEMBLY**
NOT TO SCALE

DO NOT COPY WITHOUT WRITTEN PERMISSION OF JDE © ™

RAIN MASTER® CONTROL SYSTEMS

RAIN MASTER™ TWICE 2-WIRE • LOOP CONFIGURATION

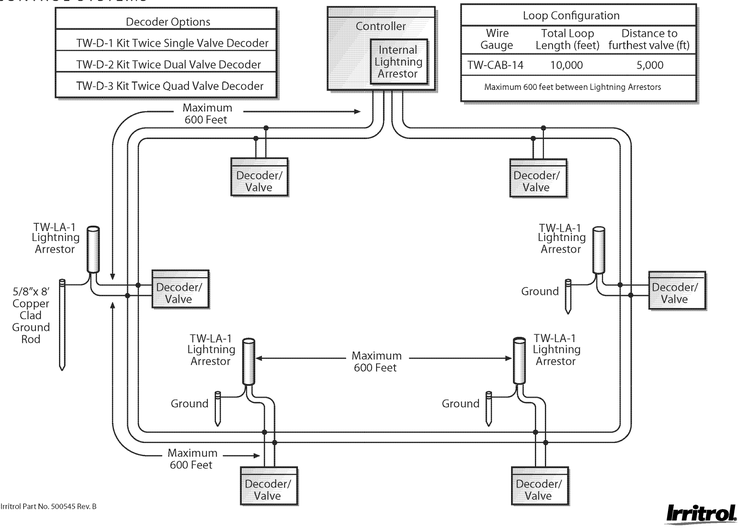

Irritrol Part No. 500545 Rev. B

Irritrol

RAIN MASTER® CONTROL SYSTEMS

RAIN MASTER™ TWICE™ • STRAIGHT LINE CONFIGURATION

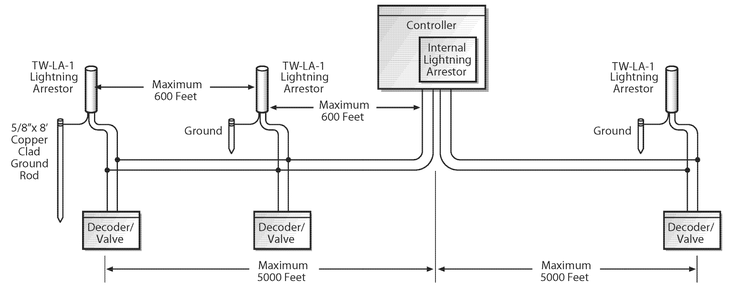

Straight Line Configuration	
Wire Gauge	Total Wire Length (feet)
TW-CAB-14	5,000
Maximum 600 feet between Lightning Arrestors	

Decoder Options
TW-D-1 Kit Twice Single Valve Decoder
TW-D-2 Kit Twice Dual Valve Decoder
TW-D-3 Kit Twice Quad Valve Decoder

Irritrol Part No. 500544 Rev. B

Irritrol

RAIN MASTER® CONTROL SYSTEMS

RAIN MASTER™ TWICE 2-WIRE • WIRE CONNECTION DETAIL

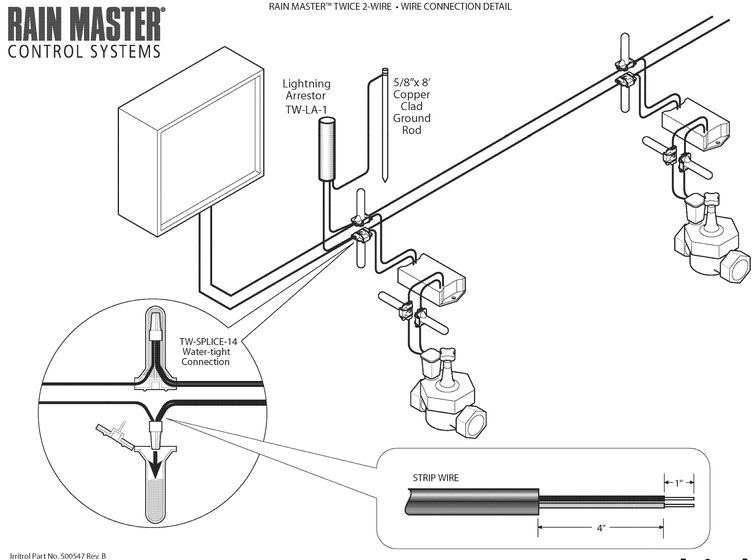

Irritrol Part No. 500547 Rev. B

Irritrol

RAIN MASTER™ TWICE• GRID CONFIGURATION

RAIN MASTER® CONTROL SYSTEMS

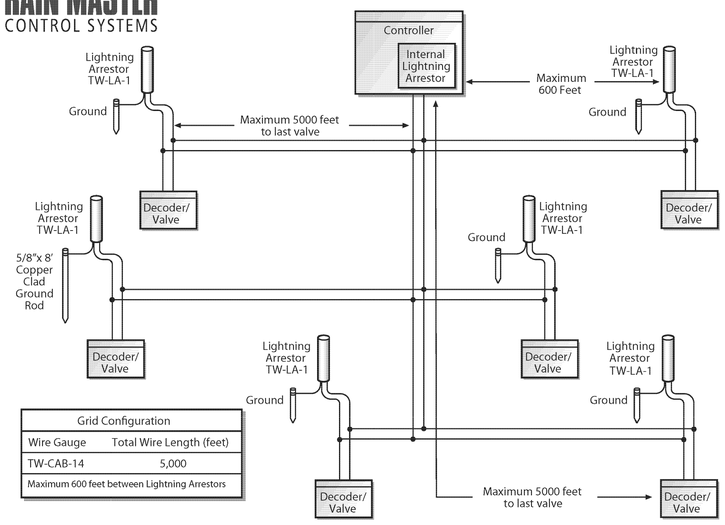

Grid Configuration	
Wire Gauge	Total Wire Length (feet)
TW-CAB-14	5,000
Maximum 600 feet between Lightning Arrestors	

Irritrol Part No. 500546 Rev. B

Irritrol

JDE
JAMES D. EDDY ASSOCIATES
LANDSCAPE IRRIGATION ENGINEERS
P.O. BOX 2291
DANVILLE, CALIFORNIA 94526
P:(925) 867-3339
EMAIL: JDE@EDDYASSOCIATES.COM
PLANNING - DESIGN - MANAGEMENT
JDE PROJECT NO: 18022

IRRIGATION DESIGNER:
James D. Eddy
JAMES D. EDDY ASSOCIATES, DANVILLE, CALIFORNIA
NOTE: NO LICENSE FOR THE LANDSCAPE IRRIGATION SYSTEM DESIGN PROFESSION IS AVAILABLE IN THE STATE OF CALIFORNIA.
MEMBER: AMERICAN SOCIETY OF IRRIGATION CONSULTANTS

QUATTROCCHI KWOK ARCHITECTS
Main Office:
636 Fifth Street, Santa Rosa, CA 95404
Pleasanton Office:
600 Main Street, Suite E,
Pleasanton, CA 94566
(707) 576-0829

GSM landscape architects, inc.
1700 Soscol Ave. Suite 23
Napa, CA 94559
707-255-4630
www.gsmlainc.com

REGISTERED LANDSCAPE ARCHITECT STEPHEN VERNON STRANZL No. 2790 Exp. 10-31-20 STATE OF CALIFORNIA

FREEDOM HIGH SCHOOL

PERFORMING ARTS AND CTE FACILITIES

1050 Neroly Rd
Oakley, CA 94561

Liberty Union High School District

ARCH PROJECT NO:	1739.00
DRAWN BY:	JMH/HDJ
DRAWING SCALE:	AS SHOWN
PTN:	61721-0068

BID SET

AUGUST 13, 2019

SHEET TITLE

IRRIGATION DETAILS

SHEET NUMBER

L3.7

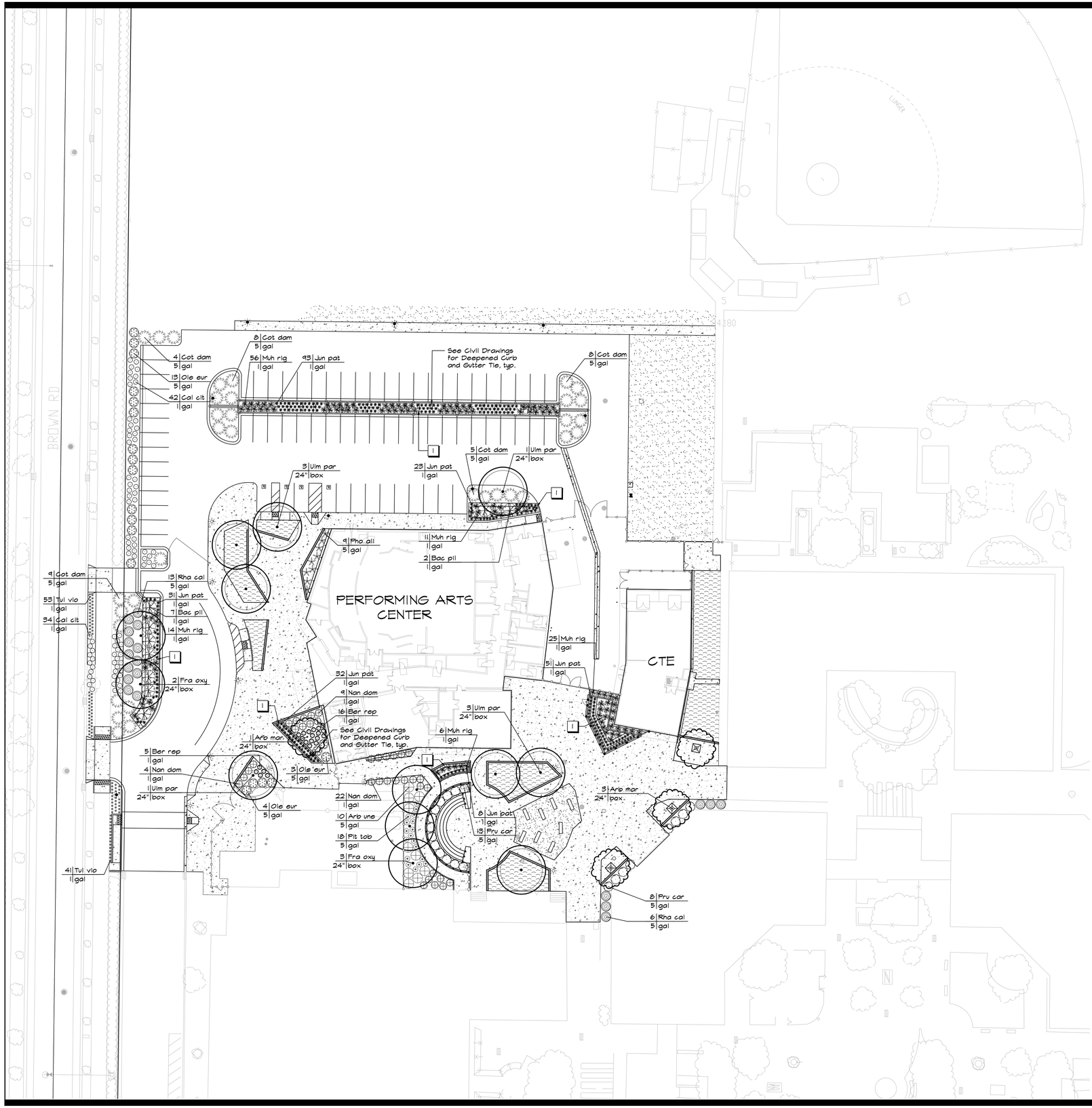

PLANT LEGEND

SYMBOL		BOTANICAL NAME COMMON NAME	SIZE	WATER USE	QUANTITY
TREES					
	Arb mar	Arbutus 'Marina' Marina Madrone	24" box	L	4
	Fra oxy	Fraxinus oxycarpa 'Raywood' Raywood Ash	24" box	M	5
	Ulm par	Ulmus parvifolia 'True Green' True Green Chinese Elm, Semievergreen	24" box	L	8
SHRUBS					
	Arb une	Arbutus unedo 'Compacta' Dwarf Strawberry Tree	5 gallon	L	10
	Bac pil	Baccharis pilularis 'Twin Peaks' Dwarf Coyote Brush	1 gallon	L	9
	Ber rep	Berberis repens Creeping Mahonia	1 gallon	L	21
	Cal clt	Callistemon 'Little John' Little John Dwarf Bottle Brush	1 gallon	L	76
	Cot dam	Cotoneaster dammeri 'Lowfast' Bearberry Cotoneaster	5 gallon	L	34
	Jun pat	Juncus patens California Gray Rush	1 gallon	L	238
	Muh rig	Muhlenbergia rigens Deergrass	1 gallon	L	112
	Nan dom	Nandina domestica 'Gulf Stream' Gulf Stream Heavenly Bamboo	1 gallon	L	35
	Ole eur	Olea europaea 'Little Ollie' Dwarf Olive	5 gallon	L	20
	Pho all	Phormium 'Alison Blackman' Alison Blackman New Zealand Flax	5 gallon	L	9
	Plt tob	Pittosporum tobira 'Cream de Mint' Variegated Dwarf Mock Orange	5 gallon	L	18
	Pru car	Prunus caroliniana 'Bright 'N Tight' Bright 'N Tight Carolina Cherry Laurel	5 gallon	L	21
	Rha cal	Rhamnus californica 'Mound San Bruno' Mound San Bruno Coffeeberry	5 gallon	L	19
	Tul vio	Tulbaghia violacea Society Garlic	1 gallon	L	94
TURF					
		Mow Free Sod, as available through Delta Bluegrass Company. Sod shall be a blend of Sheeps Fescue, Hard Fescue, and Creeping Red Fescue.	Sod	L	4,310 SF±
		Delta 90/10 Tall Fescue, non-netted sod as available through Delta Bluegrass Company.	Sod	SLA	9,305 SF±

LANDSCAPE MATERIALS

Synthetic Turf. See Material and Detail Reference Plan

KEY NOTES

1 Bioinfiltration Facilities. See Civil Drawings

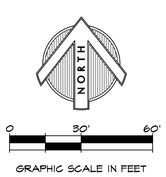

GRAPHIC SCALE IN FEET
1"=30'-0"

QUATTROCCHI KWOK ARCHITECTS
Main Office:
636 Fifth Street, Santa Rosa, CA 95404
Pleasanton Office:
600 Main Street, Suite E,
Pleasanton, CA 94566
(707) 576-0829

GSM landscape architects, inc.
1700 Soscol Ave. Suite 23
Napa, CA 94559
707-255-4630
www.gsmlainc.com

REGISTERED LANDSCAPE ARCHITECT
STEPHEN STRANZL
No. 2790
Exp. 10-31-20
STATE OF CALIFORNIA

FREEDOM HIGH SCHOOL

PERFORMING ARTS AND CTE FACILITIES

1050 Neroly Rd
Oakley, CA 94561

Liberty Union High School District

ARCH PROJECT NO:	1739.00
DRAWN BY:	JMH/HDJ
DRAWING SCALE:	AS SHOWN
PTN:	61721-0068

BID SET

AUGUST 13, 2019

SHEET TITLE

PLANTING PLAN

SHEET NUMBER

L4.0

PLANTING NOTES

1. Prior to commencement of planting, the Contractor shall verify locations of all underground utilities.
2. Contractor shall adjust all plant material around electrical utilities, valve boxes, etc., as required in the field.
3. All landscape grades shall be smooth and feathered in appearance.
4. Irrigation system shall be fully operational prior to planting. Contractor shall thoroughly water all plants immediately after planting.
5. All trees shall be staked and installed per planting details. All trees shall be of adequate trunk caliper to stand without support.
6. Installing Contractor shall verify existing grade in the field prior to planting. Finished surfaces shall be uniform and smooth. Finished grade of planting and bark mulch areas shall be flush with top of edging, pavement and walks.
7. Soil for all exposed soil and planting areas except sod and bioretention areas shall receive weed fabric and a 3" minimum depth of bark mulch. Bark mulch shall be Eco-Mini Natural Mulch, as available through EcoMulch, 5010 Pacheco Blvd., Martinez, (925) 228-1615. Bioretention areas shall receive 5" minimum depth of the compost used in the bioteatment soil mix.
8. All trees planted within 8' of adjacent paving, curbing, hardscape, water meters, joint trenches, etc. shall receive Deep Root Barrier UB 24-2 (24" depth x 10' min. length) as manufactured by Deep Root Partners (800) 458-7668, or approved equal.
9. No plant material shall be substituted without prior written consent from the Landscape Architect.
10. Contractor shall be responsible for the pre-ordering of all plant material after the Notice to Proceed. Photographs for all plants shall be submitted to the Landscape Architect prior to placing order.
11. All plant material shall be certified by the Agricultural Commissioner inspection program for freedom from the glassy winged sharpshooter or other pests identified by the Agricultural Commissioner. The Agricultural Commissioner's office shall be notified of all impending deliveries of live plants with points of origin outside of the County so that inspection can be arranged.
12. All plants of the same type and container size shall be matched in height and width.
13. The Plant Legend is provided for convenience only, not accurate bidding purposes. Graphic depiction of plant material shall take precedence over stated quantities. Contractor shall notify the Architect to obtain clarification if there are discrepancies.

SOILS MANAGEMENT NOTES

A. The following organic amendments, soil amendments and fertilizer rates and quantities shall be used for bid basis only. Contractor shall arrange and pay for soil fertility tests by an accredited soils laboratory of existing site soil after rough grading operations are complete, and shall amend the soils, according to said laboratory's recommendations. The soils recommendations shall be considered a part of these contract documents. The soils report must provide the following information:
   1. Soil permeability rate in inches per hour.
   2. Soil texture test.
   3. Cation exchange capacity.
   4. Soil fertility, including test for nitrogen, potassium, phosphorous, pH, organic matter and specific conductance (electrical conductivity).
   5. Recommendation for amendments to the planting area soil.

B. Topsoil: All landscape areas shall have a minimum 8" depth of topsoil with greater depths as required for planting work. Contractor shall provide topsoil which is fertile and friable, possessing characteristics of representative productive soils on the site. It shall not contain toxic substances which may be harmful to plant growth. When herbicide contamination is suspected than a radish/rye grass growth trial must be performed. Consult with the District prior to decision to test. It shall be uniformly textured and free of all objectionable foreign materials, oil or chemicals which may be injurious to plant growth. Natural topsoil shall possess a pH factor between 5.5 and 7.5, a sodium absorption ratio (SAR) of less than 8, a boron concentration of the saturation extract of less than 1 ppm, and salinity of the saturation extract at 25 degrees C. of less than 4.0 millimhos per centimeter. If required to import topsoil, Contractor shall obtain topsoil from naturally well-drained sites where topsoil occurs in a depth of not less than four inches (4"); do not obtain from bogs or marshes.

C. Organic Amendment: Nitrified fir bark having a minimum organic content of 94% and a nitrogen content of 0.8% minimum to 1.2% maximum on a dry weight basis. Fir bark shall be shredded to pass a one quarter inch (1/4") mesh screen. Incorporate organic amendment and fertilizer into the soil to a minimum depth of six inches (6") at a minimum rate of six cubic yards (6 cy) per one thousand square feet (1,000 sf) or per specific amendment recommendations from the soils report.

D. Fertilizer:
   1. Fertilizer shall be a commercial inorganic fertilizer in the granular or pelleted form. Fertilizer shall be delivered to the site in containers labeled in accordance with the applicable State of California regulations, bearing the narranty of the producer or the grade furnished, and shall be uniform in composition, dry and free-flowing.
   2. Turf, Shrubs and Vines:
      a. 6N-20P-20K, and 16-6-8, pelleted type.
      b. Sulphate - sulphur
      c. Lime for pH adjustment of moderately acid soil
      d. Starting one (1) month after planting, on a monthly basis, 21N-0P-0K Ammonium sulfate. 5 lbs. per 1,000 square feet.
   3. Trees:
      a. 21 gram 20N-10P-5K slow release fertilizer tablets as manufactured by Agriform. Apply according to manufacturer's instructions.
      b. After planting: 21N-0P-0K Ammonium sulfate 5lbs. per 1,000 square feet.

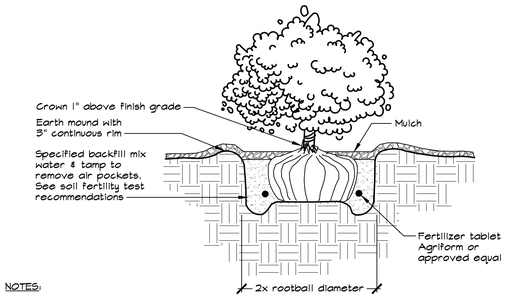

NOTES:
1. Root ball shall rest on undisturbed soil.
2. Plant tablets shall be equally spaced around root ball. The number of tablets shall be 1 for 4" pot or liner, 2 for 1 gallon, 3 for 5 gallon, and 4 for 15 gallon, or as specified in the soils fertility test recommendations.
3. Contractor shall water planting pit thoroughly following planting.
4. See Planting Notes on this sheet for mulch specification.

1 SHRUB/GROUNDCOVER PLANTING
NOT TO SCALE

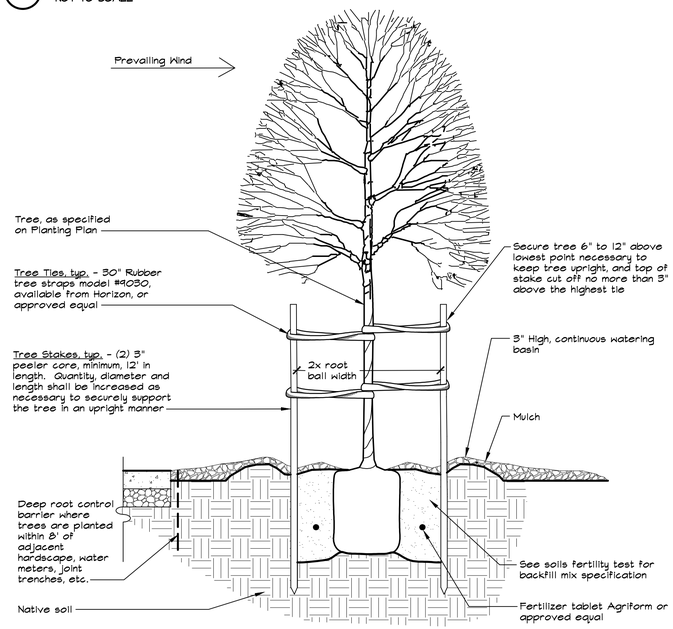

NOTES:
1. Root ball shall rest on undisturbed soil.
2. Plant tablets shall be equally spaced around root ball. The number of tablets shall be 4 for 15 gallon and 6 for 24", 36" box, or as specified in the soils fertility test recommendations.
3. Contractor shall water planting pit thoroughly following planting.
4. Trees shall be staked parallel with the direction of the prevailing wind.
5. Tree stakes shall have equal degree of separation between stakes.
7. Contractor shall use Deep Root Barrier where trees are planted within 8' of adjacent hardscape, water meters, joint trenches, etc. See Planting Notes on Planting Plan for more information.
8. See Planting Notes on this sheet for mulch specification.

3 TREE PLANTING AND STAKING
NOT TO SCALE

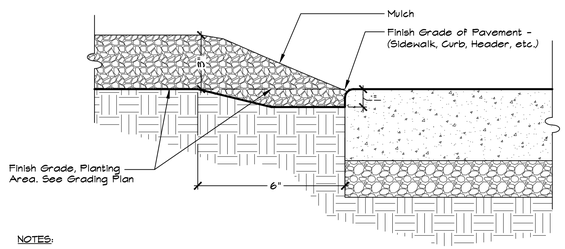

NOTES:
1. Grading shall provide for natural runoff of water without low spots or pockets.
2. See Planting Notes on this sheet for mulch specification.

5 MULCH
NOT TO SCALE

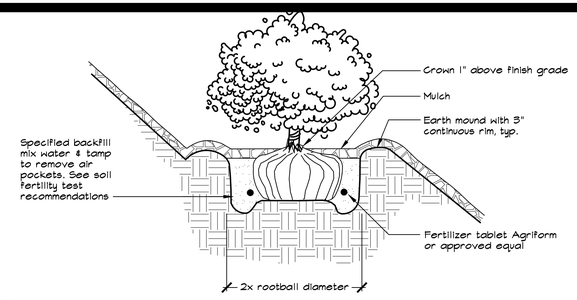

NOTES:
1. Root ball shall rest on undisturbed soil.
2. Plant tablets shall be equally spaced around root ball. The number of tablets shall be 1 for 4" pot or liner, 2 for 1 gallon, 3" for 5 gallon, and 4 for 15 gallon, or as specified in the soils fertility test recommendations.
3. Contractor shall water planting pit thoroughly following planting.
4. See Planting Notes on this sheet for mulch specification.

2 HILLSIDE SHRUB/GROUNDCOVER PLANTING
NOT TO SCALE

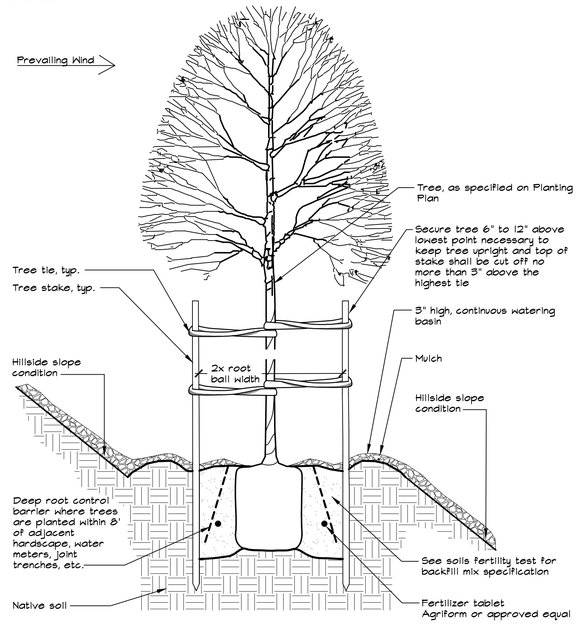

NOTES:
1. Root ball shall rest on undisturbed soil.
2. Plant tablets shall be equally spaced around root ball. The number of tablets shall be 4 for 15 gallon and 6 for 24", 36" box, or as specified in the soils fertility test recommendations.
3. Contractor shall water planting pit thoroughly following planting.
4. Trees shall be staked parallel with the direction of the prevailing wind.
5. Tree stakes shall have equal degree of separation between stakes.
7. Contractor shall use Deep Root Barrier where trees are planted within 8' of adjacent hardscape, water meters, joint trenches, etc. See Planting Notes on Planting Plan for more information.
8. See Planting Notes on this sheet for mulch specification.

4 HILLSIDE TREE PLANTING AND STAKING
NOT TO SCALE

QUATTROCCHI KWOK ARCHITECTS
Main Office:
636 Fifth Street, Santa Rosa, CA 95404
Pleasanton Office:
600 Main Street, Suite E,
Pleasanton, CA 94566
(707) 576-0829

GSM landscape architects, inc.
1700 Soscol Ave. Suite 23
Napa, CA 94559
707-255-4630
www.gsmlainc.com

REGISTERED LANDSCAPE ARCHITECT
STEPHEN STRANZL
No. 2790
Exp. 10-31-20
STATE OF CALIFORNIA

FREEDOM HIGH SCHOOL

PERFORMING ARTS AND CTE FACILITIES

1050 Neroly Rd
Oakley, CA 94561

Liberty Union High School District

ARCH PROJECT NO:	1739.00
DRAWN BY:	JMH/HDJ
DRAWING SCALE:	AS SHOWN
PTN:	61721-0068

BID SET

AUGUST 13, 2019

SHEET TITLE

PLANTING DETAILS

SHEET NUMBER

L4.1

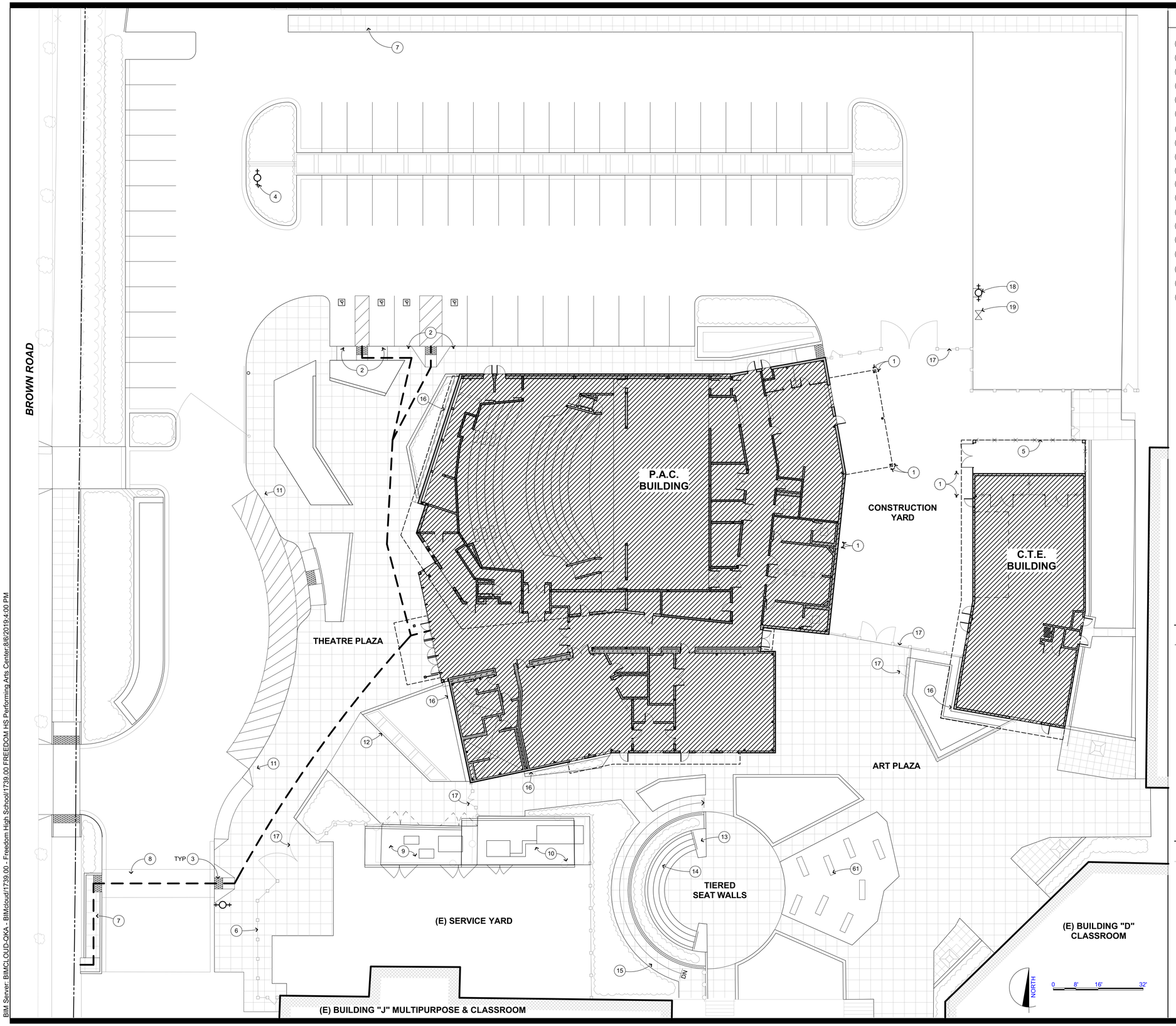

SITE PLAN KEYNOTES

NOT ALL KEYNOTES MAY APPLY TO THIS SHEET

1. BOLLARDS, S.C.D.
2. ACCESSIBLE PARKING SIGNAGE, S.C.D.
3. ACCESSIBLE CURB RAMP, S.C.D.
4. EXISTING FIRE HYDRANT, SEE SHEET G-0.3 & S.C.D.
5. CHAINLINK FENCING & GATES, S.L.D.
6. STONE PIECES, S.L.D
7. NEW SIDEWALK, S.C.D.
8. CROSSWALK, S.C.D.
9. EXISTING GARBAGE ENCLOSURE
10. EXISTING TRANSFORMER ENCLOSURE
11. DROP OFF ZONE SIGNAGE, S.C.D.
12. PLANTER WALL AND PLANTINGS TYP., S.L.D
13. RAILINGS, S.L.D.
14. TIERED SEAT WALLS, S.C.D., S.L.D.
15. ACCESSIBLE SLOPED WALKWAY, SEE SHEET G-0.4, S.C.D.
16. MOW STRIP
17. ORNAMENTAL FENCE AND GATES, S.L.D.
18. RELOCATED (E) FIRE HYDRANT, SEE SHEET G-0.3 & S.C.D.
19. FDC, S.C.D.

SITE PLAN LEGEND

- NEW BUILDING
- (E) BUILDING TO REMAIN
- CONCRETE PAVING, S.C.D. S.L.D. FOR CONCRETE JOINTING LAYOUT
- PROPERTY LINE
- [B] ACCESSIBLE BOY'S TOILET
- [G] ACCESSIBLE GIRL'S TOILET
- [U] ACCESSIBLE UNISEX TOILET
- [S] ACCESSIBLE STAFF TOILET
- [M] ACCESSIBLE MEN'S TOILET
- [W] ACCESSIBLE WOMEN'S TOILET

KEY PLAN

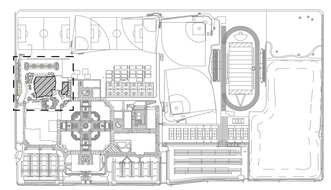

QUATTROCCHI KWOK ARCHITECTS
Main Office:
636 Fifth Street, Santa Rosa, CA 95404
Pleasanton Office:
600 Main Street, Suite E,
Pleasanton, CA 94566
(707) 576-0829

LICENSED ARCHITECT
JIM THEISS
LICENSE # C22643
EXP JUNE 30, 2021
STATE OF CALIFORNIA

SIGNED: AUGUST 13, 2019

FREEDOM HIGH SCHOOL

PERFORMING ARTS AND CTE FACILITIES

1050 NEROLY RD,
OAKLEY, CA 94561

LIBERTY UNION HIGH SCHOOL DISTRICT

ARCH PROJECT NO:	1739.00
DRAWN BY:	
DRAWING SCALE:	1/16" = 1'-0"
PTN:	61721-0068

BID SET

AUGUST 13, 2019

SHEET TITLE

PARTIAL SITE PLAN

SHEET NUMBER

A-1.1

BIM Server: BIMCLOUD-QKA - BIMcloud/1739.00 - Freedom High School/1739.00 FREEDOM HS Performing Arts Center:8/6/2019 4:00 PM

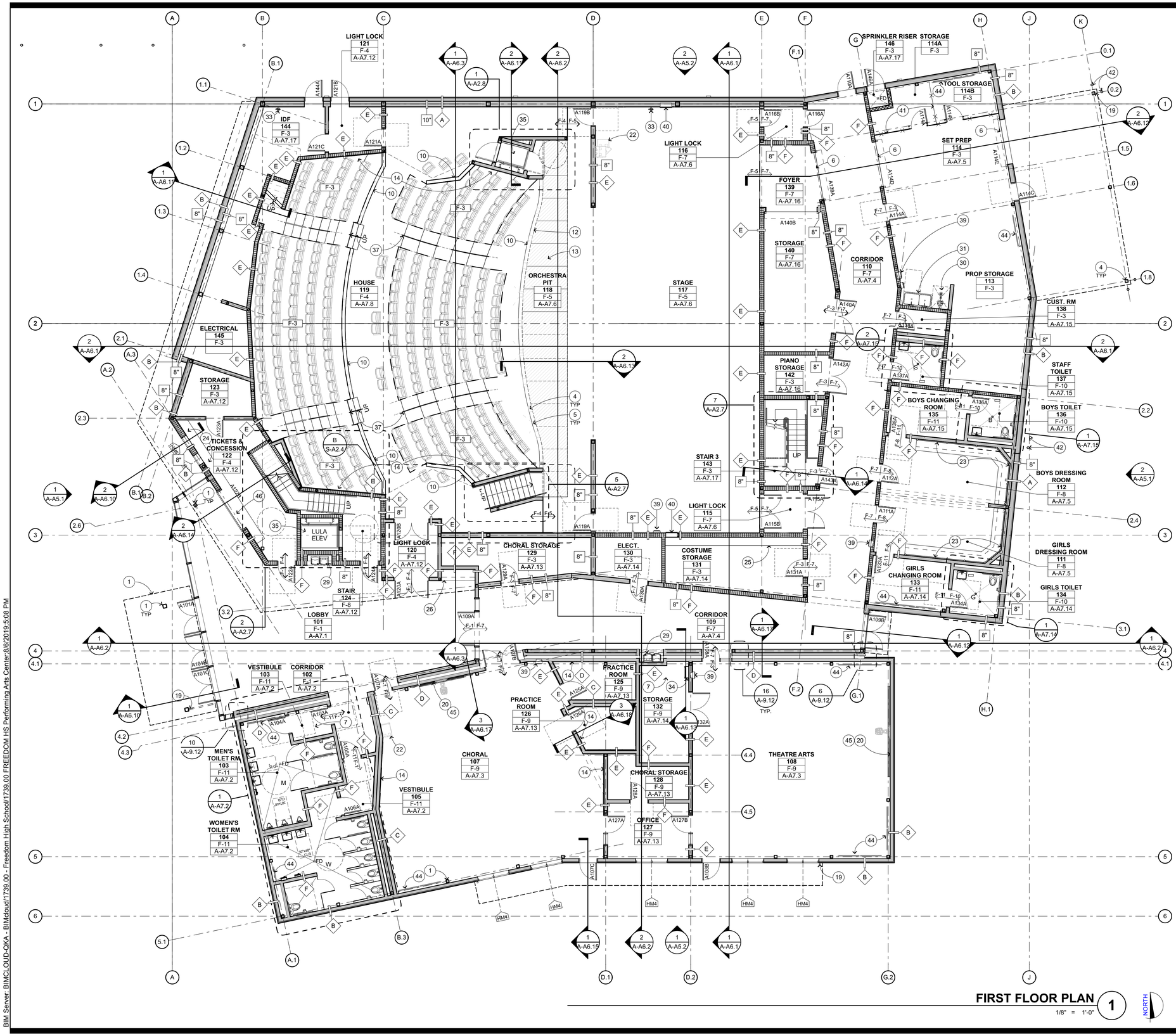

FIRST FLOOR PLAN 1
1/8" = 1'-0"

NORTH

FLOOR PLAN KEYNOTES

NOT ALL KEYNOTES MAY APPLY TO THIS SHEET

1. STRUCTURAL ITEM, S.S.D.
2. MECHANICAL ITEM, S.M.D.
3. PLUMBING ITEM, S.P.D.
4. ELECTRICAL ITEM, S.E.D.
5. THEATRICAL ITEM, S.T.D.
6. ROLL UP COILING DOOR
7. 2'X2' CEILING ACCESS PANEL
8. 2'X4' ROOF ACCESS HATCH
9. SMOKE AND HEAT VENT ABOVE
10. LOW WALL
11. 4" HIGH SOLID FRAMED CURB
12. CONC. LOW WALL, S.S.D.
13. ADJUSTABLE/REMOVABLE THRUST, S.T.D., S.S.D.
14. ACOUSTIC WALL PANEL, SEE INTERIOR ELEVATIONS
15. TENSION GRID, S.S.D.
16. RAIN CANOPY, SEE ROOF PLAN
17. NOT USED
18. ROOF DRAIN
19. RAIN WATER LEADER
20. MOTORIZED PROJECTION SCREEN
21. CEILING MOUNTED PROJECTOR
22. EQUIPMENT RACK, S.T.D.
23. DRESSING ROOM COUNTERTOP, MIRROR, LIGHTS AND SHELF
24. TICKET COUNTERTOP
25. COSTUME SHELVES & POLE
26. TROPHY DISPLAY CASEWORK
27. AUDIO COUNTERTOP
28. CONTROL ROOM COUNTERTOP
29. ACCESSIBLE HI-LO DRINKING FOUNTAIN W/ BOTTLE FILLER
30. EYE WASH STATION
31. COMMERCIAL GRADE SHOP SINK
32. ENTRY CANOPY, S.S.D. AND
33. SURFACE MOUNTED FIRE EXTINGUISHER
34. LADDER
35. WHEELCHAIR LIFT
36. GUARDRAILS
37. HANDRAILS
38. LIGHTING/EQUIPMENT GUARDRAILS, S.T.D.
39. SEMI-RECESSED F.E.C.
40. RECESSED HOSE CABINET, S.F.P.D.
41. CHAINLINK ENCLOSURE
42. BOLLARD, S.L.D.
43. GUTTER
44. CANE RAIL
45. MARKER BOARD
46. CONCESSION BOOTH ROLL UP SHUTTERS

FLOOR FINISH CODES

F-1	COLORED POLISHED CONCRETE	F-7	RESILIENT FLOORING TYPE 1
F-2	POLISHED CONCRETE	F-8	RESILIENT FLOORING TYPE 2
F-3	SEALED CONCRETE	F-9	RESILIENT ATHLETIC FLOORING
F-4	CARPET	F-10	RESILIENT SHEET FLOORING
F-5	CUSHIONED WOOD FLOORING	F-11	FLUID APPLIED EPOXY
F-6	COLORED CONCRETE		NOTE: FOR FLOOR FINISH TRANSITIONS SEE

WALL TYPE LEGEND

NOTES:
ALL METAL FRAMING IS 6" STUDS, U.O.N., S.S.D.
ALL WALLS TO BE ACOUSTIC , U.O.N.

- METAL FRAMING, 1-HR FIRE RATED
- METAL FRAMING, NON-RATED WALL, INSULATED
- # FRAMING STUD SIZE

ACOUSTIC DETAILS

- A EXT. DOUBLE STUD WALL
- B EXT. SINGLE STUD WALL
- C INT. DOUBLE STUD WALL
- D INT. DOUBLE STUD WALL
- E INT. SINGLE STUD WALL
- F INT. SINGLE STUD WALL

KEY PLAN

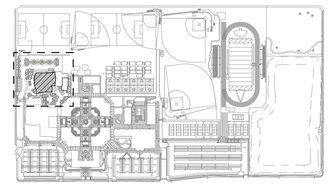

QUATTROCCHI KWOK ARCHITECTS
Main Office:
636 Fifth Street, Santa Rosa, CA 95404
Pleasanton Office:
600 Main Street, Suite E,
Pleasanton, CA 94566
(707) 576-0829

LICENSED ARCHITECT
JIM THEISS
LICENSE # C22643
EXP JUNE 30, 2021
STATE OF CALIFORNIA

SIGNED: AUGUST 13, 2019

FREEDOM HIGH SCHOOL

PERFORMING ARTS AND CTE FACILITIES

1050 NEROLY RD,
OAKLEY, CA 94561

LIBERTY UNION HIGH SCHOOL DISTRICT

ARCH PROJECT NO:	1739.00
DRAWN BY:	
DRAWING SCALE:	1/8" = 1'-0"
PTN:	61721-0068

BID SET

AUGUST 13, 2019

SHEET TITLE

BLDG A FIRST FLOOR PLAN

SHEET NUMBER

A-A2.1

BIM Server: BIMCLOUD-QKA - BIMcloud/1739.00 - Freedom High School/1739.00 FREEDOM HS Performing Arts Center.8/6/2019,5:08 PM

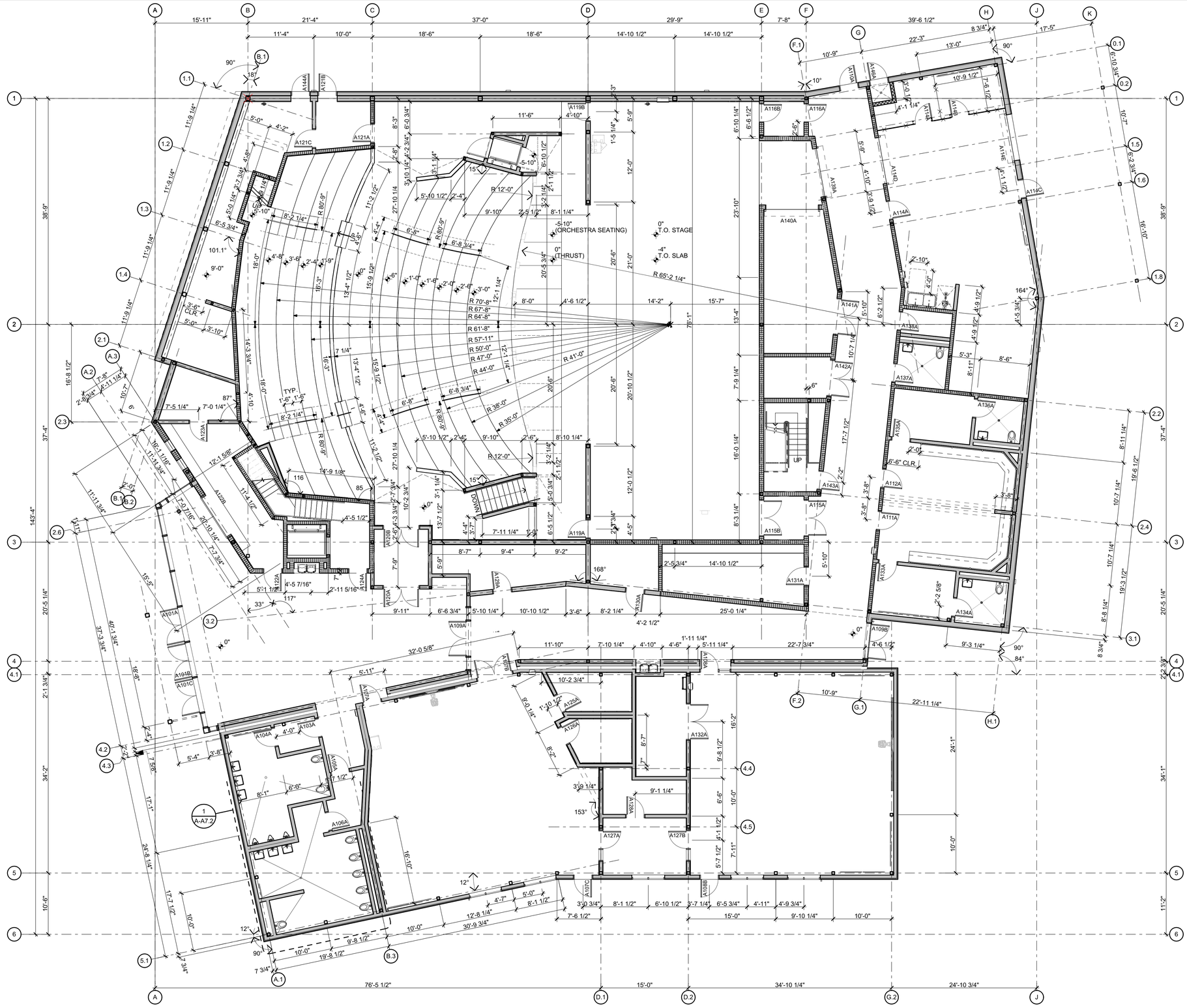

KEY PLAN

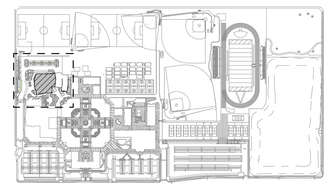

QUATTROCCHI KWOK ARCHITECTS
Main Office:
636 Fifth Street, Santa Rosa, CA 95404
Pleasanton Office:
600 Main Street, Suite E,
Pleasanton, CA 94566
(707) 576-0829

LICENSED ARCHITECT
JIM THEISS
LICENSE # C22643
EXP JUNE 30, 2021
STATE OF CALIFORNIA

SIGNED: AUGUST 13, 2019

FREEDOM HIGH SCHOOL

PERFORMING ARTS AND CTE FACILITIES

1050 NEROLY RD,
OAKLEY, CA 94561

LIBERTY UNION HIGH SCHOOL DISTRICT

ARCH PROJECT NO:	1739.00
DRAWN BY:	
DRAWING SCALE:	
PTN:	61721-0068

BID SET

AUGUST 13, 2019

SHEET TITLE

BLDG A FIRST FLOOR DIMENSION PLAN

SHEET NUMBER

A-A2.2

BIM Server: BIMCLOUD-QKA - BIMcloud/1739.00 - Freedom High School/1739.00 FREEDOM HS Performing Arts Center.8/6/2019 5:08 PM

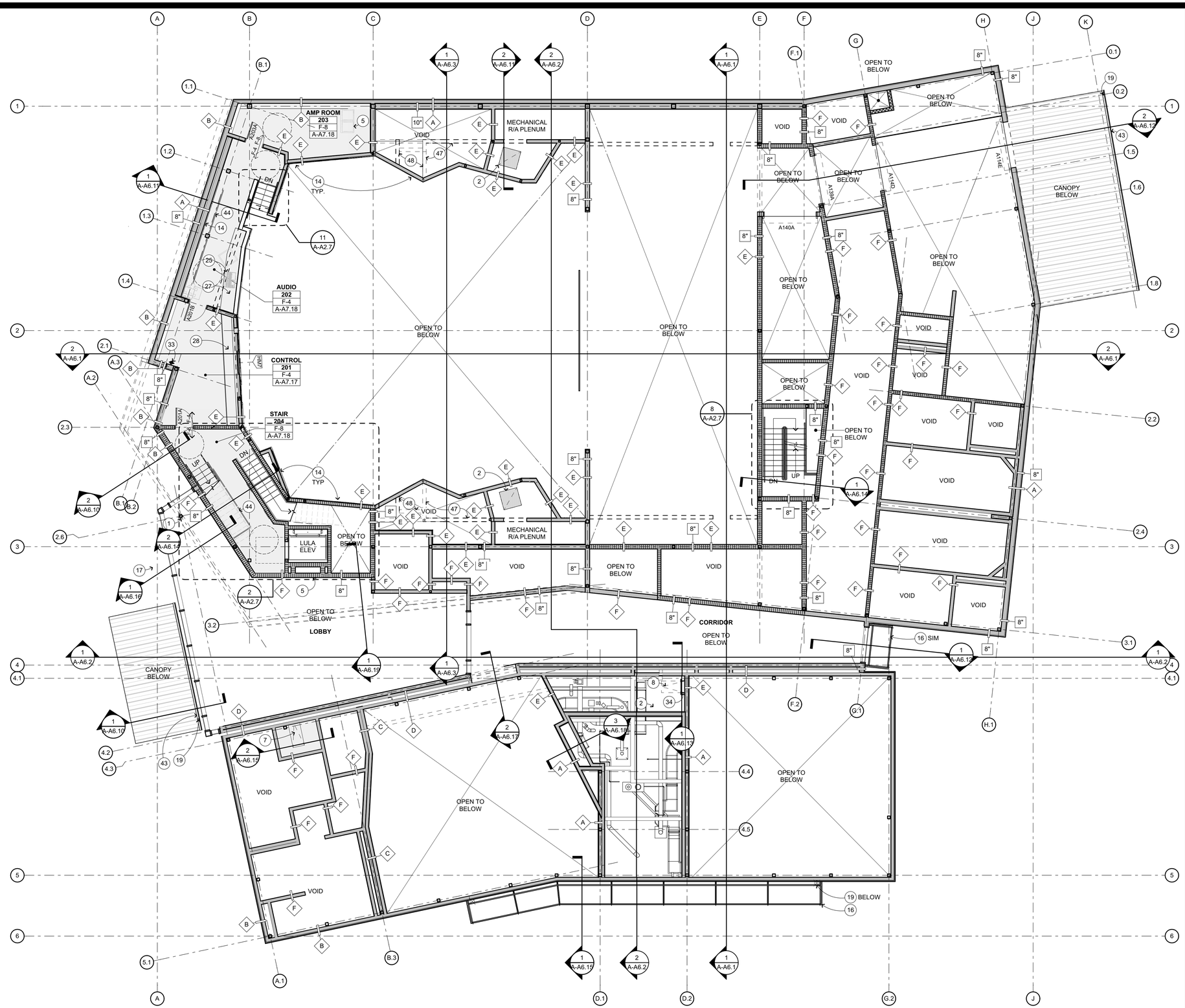

CONTROL BOOTH LEVEL FLOOR PLAN

1/8" = 1'-0"

FLOOR PLAN KEYNOTES

NOT ALL KEYNOTES MAY APPLY TO THIS SHEET

1. STRUCTURAL ITEM, S.S.D.
2. MECHANICAL ITEM, S.M.D.
3. PLUMBING ITEM, S.P.D.
4. ELECTRICAL ITEM, S.E.D.
5. THEATRICAL ITEM, S.T.D.
6. ROLL UP COILING DOOR
7. 2'X2' CEILING ACCESS PANEL
8. 2'X4' ROOF ACCESS HATCH
9. SMOKE AND HEAT VENT ABOVE
10. LOW WALL
11. 4" HIGH SOLID FRAMED CURB
12. CONC. LOW WALL, S.S.D.
13. ADJUSTABLE/REMOVABLE THRUST, S.T.D., S.S.D.
14. ACOUSTIC WALL PANEL, SEE INTERIOR ELEVATIONS
15. TENSION GRID, S.S.D.
16. RAIN CANOPY, SEE ROOF PLAN
17. NOT USED
18. ROOF DRAIN
19. RAIN WATER LEADER
20. MOTORIZED PROJECTION SCREEN
21. CEILING MOUNTED PROJECTOR
22. EQUIPMENT RACK, S.T.D.
23. DRESSING ROOM COUNTERTOP, MIRROR, LIGHTS AND SHELF
24. TICKET COUNTERTOP
25. COSTUME SHELVES & POLE
26. TROPHY DISPLAY CASEWORK
27. AUDIO COUNTERTOP
28. CONTROL ROOM COUNTERTOP
29. ACCESSIBLE HI-LO DRINKING FOUNTAIN W/ BOTTLE FILLER
30. EYE WASH STATION
31. COMMERCIAL GRADE SHOP SINK
32. ENTRY CANOPY, S.S.D. AND
33. SURFACE MOUNTED FIRE EXTINGUISHER
34. LADDER
35. WHEELCHAIR LIFT
36. GUARDRAILS
37. HANDRAILS
38. LIGHTING/EQUIPMENT GUARDRAILS, S.T.D.
39. SEMI-RECESSED F.E.C.
40. RECESSED HOSE CABINET, S.F.P.D.
41. CHAINLINK ENCLOSURE
42. BOLLARD, S.L.D.
43. GUTTER
44. CANE RAIL
45. MARKER BOARD
46. CONCESSION BOOTH ROLL UP SHUTTERS

FLOOR FINISH CODES

F-1	COLORED POLISHED CONCRETE	F-7	RESILIENT FLOORING TYPE 1
F-2	POLISHED CONCRETE	F-8	RESILIENT FLOORING TYPE 2
F-3	SEALED CONCRETE	F-9	RESILIENT ATHLETIC FLOORING
F-4	CARPET	F-10	RESILIENT SHEET FLOORING
F-5	CUSHIONED WOOD FLOORING	F-11	FLUID APPLIED EPOXY
F-6	COLORED CONCRETE		

NOTE: FOR FLOOR FINISH TRANSITIONS SEE

WALL TYPE LEGEND

NOTES:
ALL METAL FRAMING IS 6" STUDS, U.O.N., S.S.D.
ALL WALLS TO BE ACOUSTIC , U.O.N.

- METAL FRAMING, 1-HR FIRE RATED
- METAL FRAMING, NON-RATED WALL, INSULATED
- # FRAMING STUD SIZE

ACOUSTIC DETAILS

- A EXT. DOUBLE STUD WALL
- B EXT. SINGLE STUD WALL
- C INT. DOUBLE STUD WALL
- D INT. DOUBLE STUD WALL
- E INT. SINGLE STUD WALL
- F INT. SINGLE STUD WALL

KEY PLAN

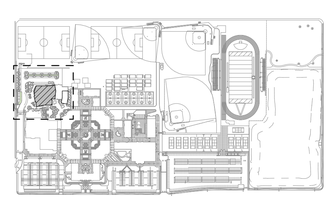

QUATTROCCHI KWOK ARCHITECTS
Main Office:
636 Fifth Street, Santa Rosa, CA 95404
Pleasanton Office:
600 Main Street, Suite E,
Pleasanton, CA 94566
(707) 576-0829

LICENSED ARCHITECT
JIM THEISS
LICENSE # C22643
EXP. JUNE 30, 2021
STATE OF CALIFORNIA

SIGNED: AUGUST 13, 2019

FREEDOM HIGH SCHOOL

PERFORMING ARTS AND CTE FACILITIES

1050 NEROLY RD,
OAKLEY, CA 94561

LIBERTY UNION HIGH SCHOOL DISTRICT

ARCH PROJECT NO:	1739.00
DRAWN BY:	
DRAWING SCALE:	
PTN:	61721-0068

BID SET

AUGUST 13, 2019

SHEET TITLE

BLDG A CONTROL BOOTH LEVEL FLOOR PLAN

SHEET NUMBER

A-A2.3

BIM Server: BIMCLOUD-QKA - BIMcloud/1739.00 - Freedom High School/1739.00 FREEDOM HS Performing Arts Center.8/6/2019 5:09 PM

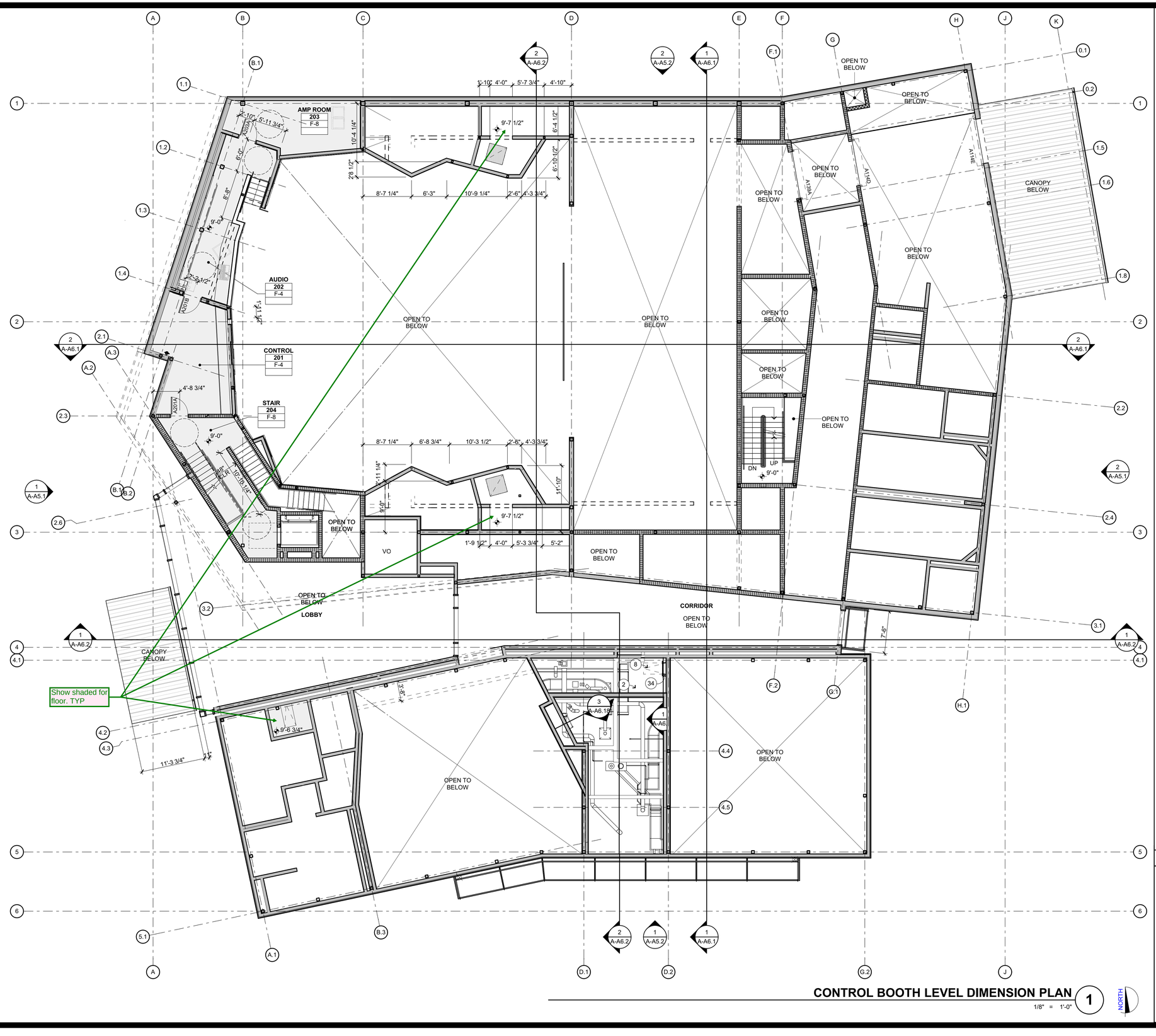

CONTROL BOOTH LEVEL DIMENSION PLAN

1/8" = 1'-0"

NORTH

KEY PLAN

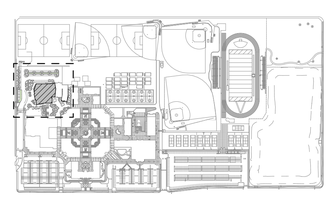

QUATTROCCHI KWOK ARCHITECTS

Main Office:
636 Fifth Street, Santa Rosa, CA 95404
Pleasanton Office:
600 Main Street, Suite E,
Pleasanton, CA 94566
(707) 576-0829

LICENSED ARCHITECT
JIM THEISS
LICENSE # C22643
EXP JUNE 30, 2021
STATE OF CALIFORNIA

SIGNED: AUGUST 13, 2019

FREEDOM HIGH SCHOOL

PERFORMING ARTS AND CTE FACILITIES

1050 NEROLY RD,
OAKLEY, CA 94561

LIBERTY UNION HIGH SCHOOL DISTRICT

ARCH PROJECT NO:	1739.00
DRAWN BY:	
DRAWING SCALE:	
PTN:	61721-0068

BID SET

AUGUST 13, 2019

SHEET TITLE

BLDG A CONTROL BOOTH LEVEL DIMENSION PLAN

SHEET NUMBER

A-A2.4

BIM Server: BIMCLOUD-QKA - BIMcloud/1739.00 - Freedom High School/1739.00 FREEDOM HS Performing Arts Center.8/6/2019 5:09 PM

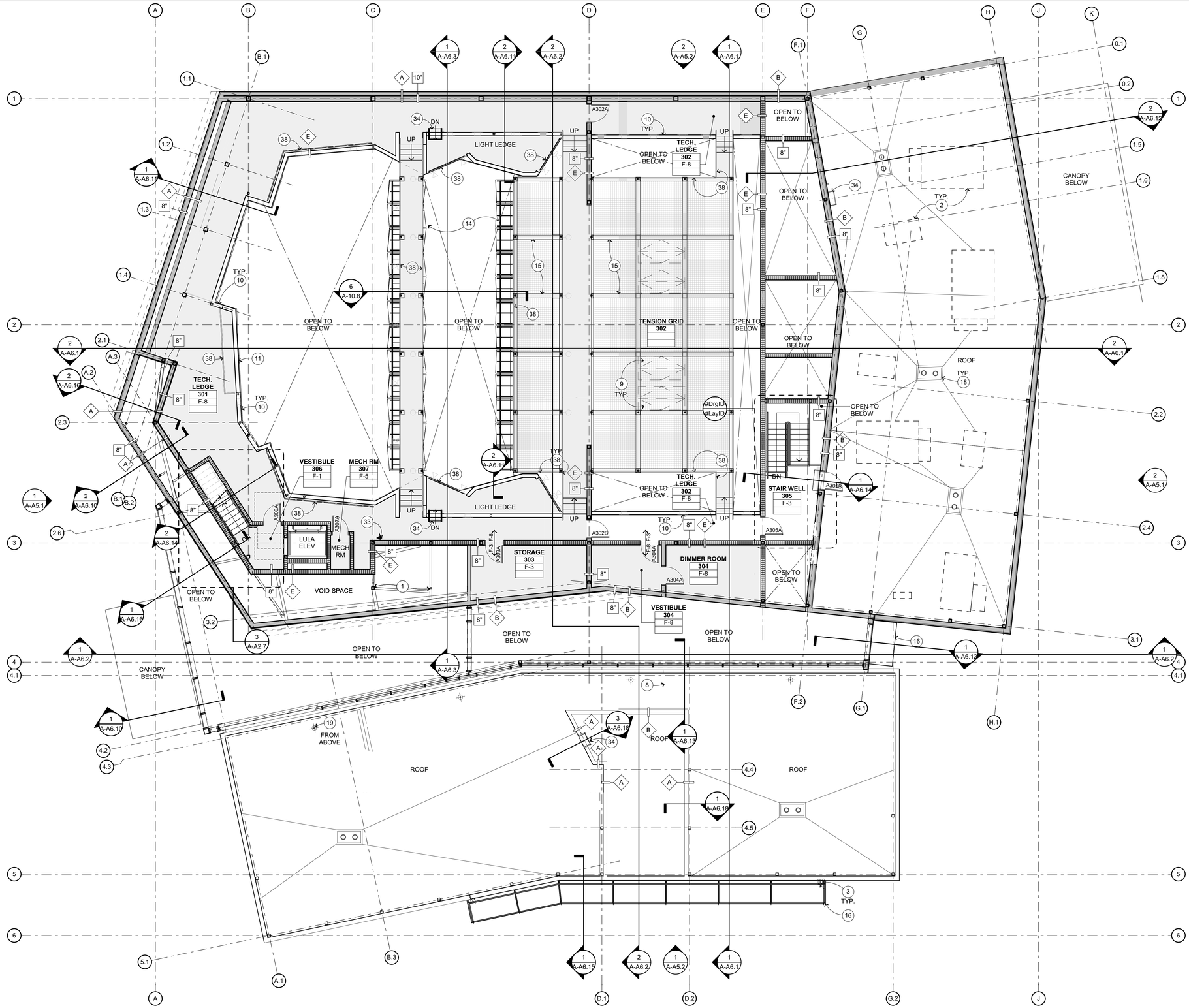

TECH LEDGE FLOOR PLAN 1

1/8" = 1'-0"

NORTH

FLOOR PLAN KEYNOTES

NOT ALL KEYNOTES MAY APPLY TO THIS SHEET

1 STRUCTURAL ITEM, S.S.D.
2 MECHANICAL ITEM, S.M.D.
3 PLUMBING ITEM, S.P.D.
4 ELECTRICAL ITEM, S.E.D.
5 THEATRICAL ITEM, S.T.D.
6 ROLL UP COILING DOOR
7 2'X2' CEILING ACCESS PANEL
8 2'X4' ROOF ACCESS HATCH
9 SMOKE AND HEAT VENT ABOVE
10 LOW WALL
11 4" HIGH SOLID FRAMED CURB
12 CONC. LOW WALL, S.S.D.
13 ADJUSTABLE/REMOVABLE THRUST, S.T.D., S.S.D.
14 ACOUSTIC WALL PANEL, SEE INTERIOR ELEVATIONS
15 TENSION GRID, S.S.D.
16 RAIN CANOPY, SEE ROOF PLAN
17 NOT USED
18 ROOF DRAIN
19 RAIN WATER LEADER
20 MOTORIZED PROJECTION SCREEN
21 CEILING MOUNTED PROJECTOR
22 EQUIPMENT RACK, S.T.D.
23 DRESSING ROOM COUNTERTOP, MIRROR, LIGHTS AND SHELF
24 TICKET COUNTERTOP
25 COSTUME SHELVES & POLE
26 TROPHY DISPLAY CASEWORK
27 AUDIO COUNTERTOP
28 CONTROL ROOM COUNTERTOP
29 ACCESSIBLE HI-LO DRINKING FOUNTAIN W/ BOTTLE FILLER
30 EYE WASH STATION
31 COMMERCIAL GRADE SHOP SINK
32 ENTRY CANOPY, S.S.D. AND
33 SURFACE MOUNTED FIRE EXTINGUISHER
34 LADDER
35 WHEELCHAIR LIFT
36 GUARDRAILS
37 HANDRAILS
38 LIGHTING/EQUIPMENT GUARDRAILS, S.T.D.
39 SEMI-RECESSED F.E.C.
40 RECESSED HOSE CABINET, S.F.P.D.
41 CHAINLINK ENCLOSURE
42 BOLLARD, S.L.D.
43 GUTTER
44 CANE RAIL
45 MARKER BOARD
46 CONCESSION BOOTH ROLL UP SHUTTERS

FLOOR FINISH CODES

F-1	COLORED POLISHED CONCRETE	F-7	RESILIENT FLOORING TYPE 1
F-2	POLISHED CONCRETE	F-8	RESILIENT FLOORING TYPE 2
F-3	SEALED CONCRETE	F-9	RESILIENT ATHLETIC FLOORING
F-4	CARPET	F-10	RESILIENT SHEET FLOORING
F-5	CUSHIONED WOOD FLOORING	F-11	FLUID APPLIED EPOXY
F-6	COLORED CONCRETE		

NOTE: FOR FLOOR FINISH TRANSITIONS SEE 3 / A-10.3

WALL TYPE LEGEND

NOTES:
ALL METAL FRAMING IS 6" STUDS, U.O.N., S.S.D.
ALL WALLS TO BE ACOUSTIC , U.O.N.

METAL FRAMING, 1-HR FIRE RATED
METAL FRAMING, NON-RATED WALL, INSULATED
FRAMING STUD SIZE

ACOUSTIC DETAILS

A EXT. DOUBLE STUD WALL — 5 / A-9.2
B EXT. SINGLE STUD WALL — 6 / A-9.2
C INT. DOUBLE STUD WALL — 7 / A-9.2
D INT. DOUBLE STUD WALL — 8 / A-9.2
E INT. SINGLE STUD WALL — 10 / A-9.2
F INT. SINGLE STUD WALL — 11 / A-9.2

KEY PLAN

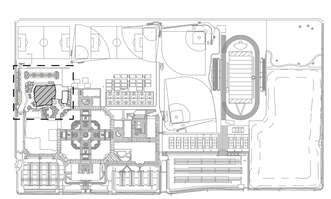

QUATTROCCHI KWOK ARCHITECTS
Main Office:
636 Fifth Street, Santa Rosa, CA 95404
Pleasanton Office:
600 Main Street, Suite E,
Pleasanton, CA 94566
(707) 576-0829

LICENSED ARCHITECT
JIM THEISS
LICENSE # C22643
EXP JUNE 30, 2021
STATE OF CALIFORNIA

SIGNED: AUGUST 13, 2019

FREEDOM HIGH SCHOOL

PERFORMING ARTS AND CTE FACILITIES

1050 NEROLY RD,
OAKLEY, CA 94561

LIBERTY UNION HIGH SCHOOL DISTRICT

ARCH PROJECT NO: 1739.00
DRAWN BY:
DRAWING SCALE:
PTN: 61721-0068

BID SET

AUGUST 13, 2019

SHEET TITLE

BLDG A TECH LEDGE FLOOR PLAN

SHEET NUMBER

A-A2.5

BIM Server: BIMCLOUD-QKA - BIMcloud/1739.00 - Freedom High School/1739.00 FREEDOM HS Performing Arts Center.8/6/2019 5:09 PM

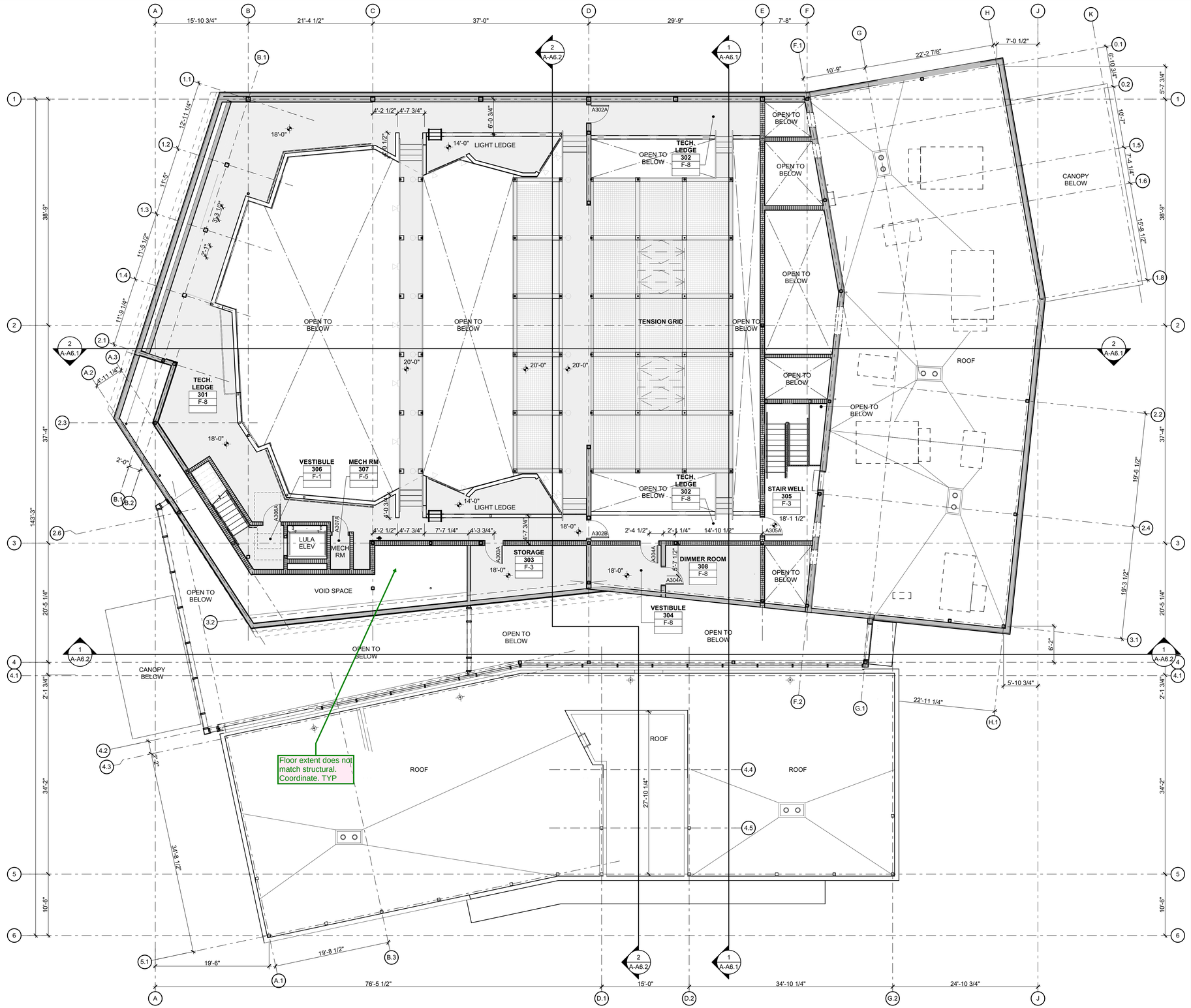

TECH LEDGE DIMENSION PLAN 1

1/8" = 1'-0"

NORTH

BIM Server: BIMCLOUD-QKA - BIMcloud/1739.00 - Freedom High School/1739.00 FREEDOM HS Performing Arts Center.ifc 8/6/2019 5:10 PM

KEY PLAN

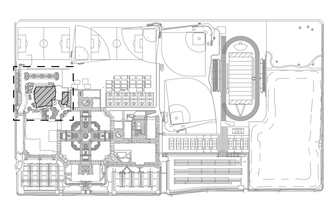

QUATTROCCHI KWOK ARCHITECTS

Main Office:
636 Fifth Street, Santa Rosa, CA 95404
Pleasanton Office:
600 Main Street, Suite E,
Pleasanton, CA 94566
(707) 576-0829

LICENSED ARCHITECT
JIM THEISS
LICENSE # C22643
EXP. JUNE 30, 2021
STATE OF CALIFORNIA

SIGNED: AUGUST 13, 2019

FREEDOM HIGH SCHOOL

PERFORMING ARTS AND CTE FACILITIES

1050 NEROLY RD,
OAKLEY, CA 94561

LIBERTY UNION HIGH SCHOOL DISTRICT

ARCH PROJECT NO: 1739.00
DRAWN BY:
DRAWING SCALE:
PTN: 61721-0068

BID SET

AUGUST 13, 2019

SHEET TITLE

BLDG A TECH LEDGE DIMENSION PLAN

SHEET NUMBER

A-A2.6

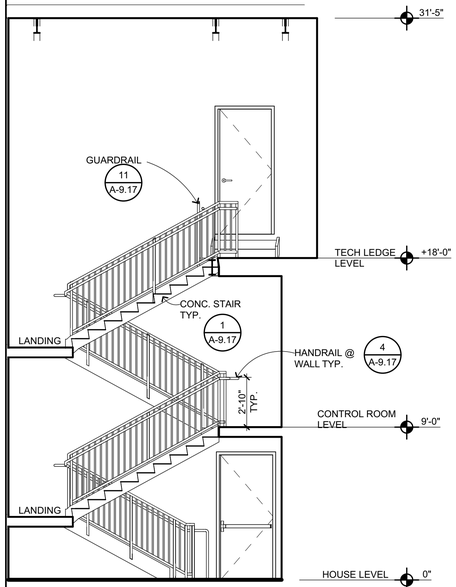

STAIR 3 SECTION

1/4" = 1'-0" — 10

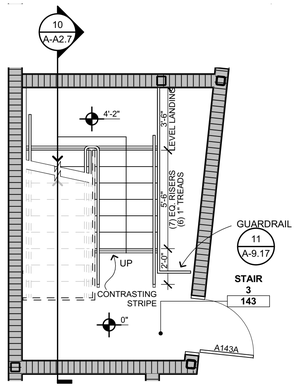

STAIR 143 @ FIRST FLOOR

1/4" = 1'-0" — 7

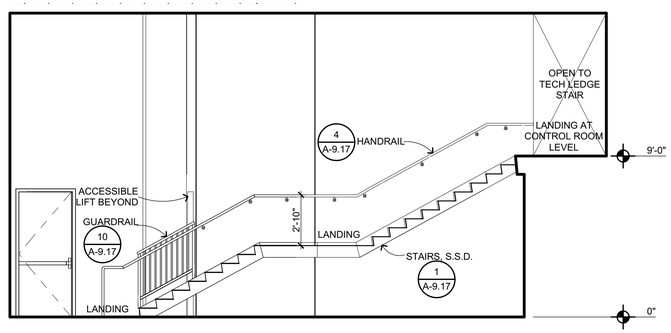

SECTION THRU STAIR 124

1/4" = 1'-0" — 4

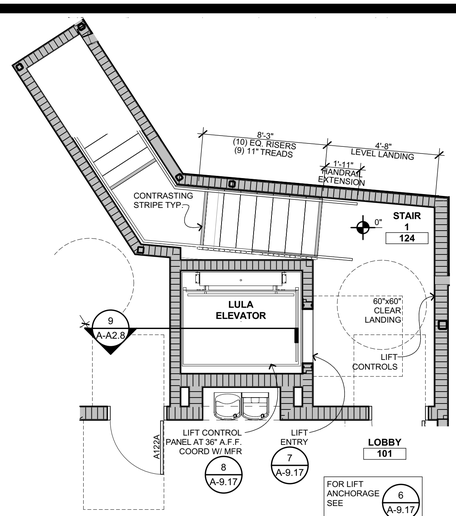

STAIR124 & LIFT 1 AT FIRST FLOOR

1/4" = 1'-0" — 1

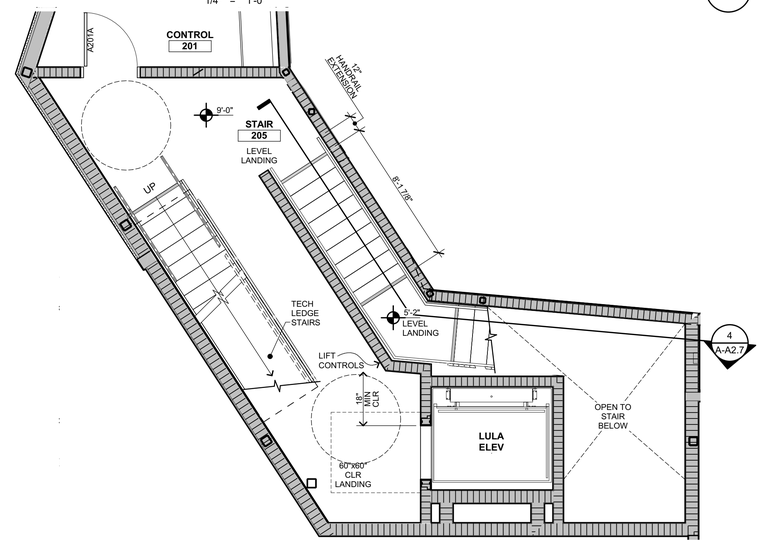

STAIR 124 & LIFT 1 AT CONTROL RM FLOOR

1/4" = 1'-0" — 2

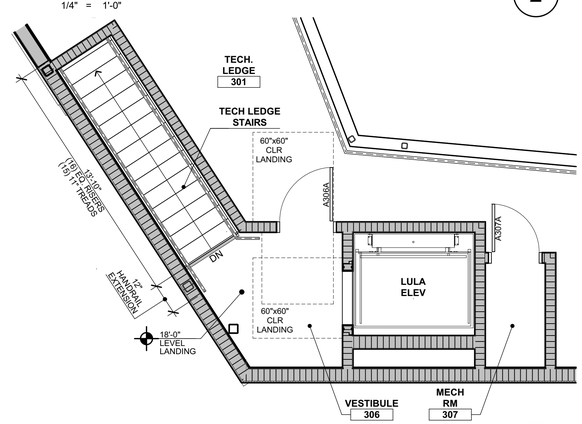

STAIR 204 AT TECH LEDGE FLOOR

1/4" = 1'-0" — 3

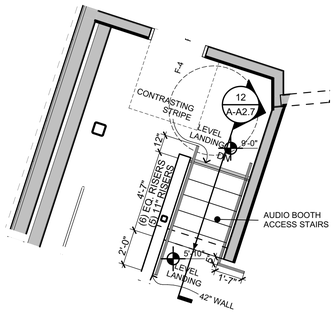

STAIR HOUSE TO AUDIO BOOTH PLAN

1/4" = 1'-0" — 11

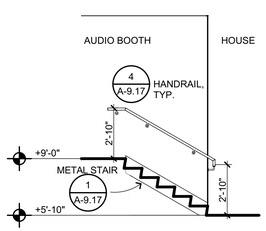

SECTION THROUGH AUDIO BOOTH STAIRWELL

1/4" = 1'-0" — 12

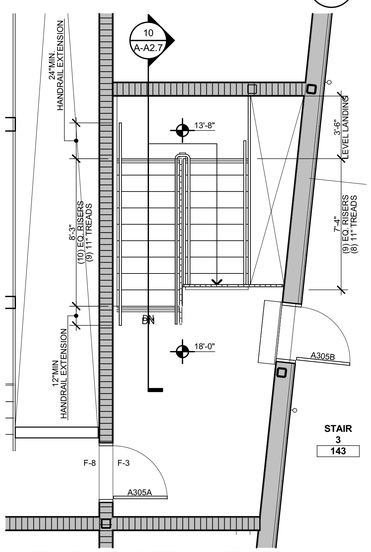

STAIR 143 @ TECH LEDGE FLOOR LEVEL

1/4" = 1'-0" — 9

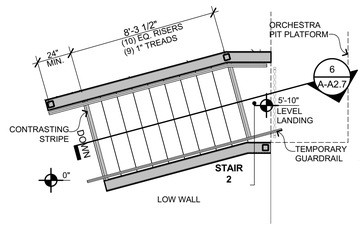

STAIR HOUSE TO ORCHESTRA PIT PLAN

1/4" = 1'-0" — 5

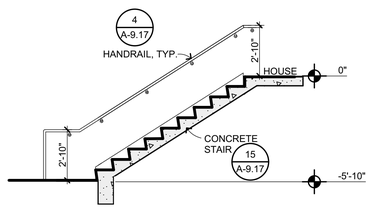

SECTION STAIR HOUSE TO ORCHESTRA PIT

1/4" = 1'-0" — 6

QUATTROCCHI KWOK ARCHITECTS
Main Office:
636 Fifth Street, Santa Rosa, CA 95404
Pleasanton Office:
600 Main Street, Suite E,
Pleasanton, CA 94566
(707) 576-0829

LICENSED ARCHITECT
JIM THEISS
LICENSE # C22643
EXP JUNE 30, 2021
STATE OF CALIFORNIA

SIGNED: AUGUST 13, 2019

FREEDOM HIGH SCHOOL

PERFORMING ARTS AND CTE FACILITIES

1050 NEROLY RD,
OAKLEY, CA 94561

LIBERTY UNION HIGH SCHOOL DISTRICT

ARCH PROJECT NO:	1739.00
DRAWN BY:	
DRAWING SCALE:	
PTN:	61721-0068

BID SET

AUGUST 13, 2019

SHEET TITLE

BLDG A ENLARGED STAIR AND LIFT PLANS

SHEET NUMBER

A-A2.7

BIM Server: BIMCLOUD-QKA - BIMcloud/1739.00 - Freedom High School/1739.00 FREEDOM HS Performing Arts Center-8/6/2019 5:11 PM

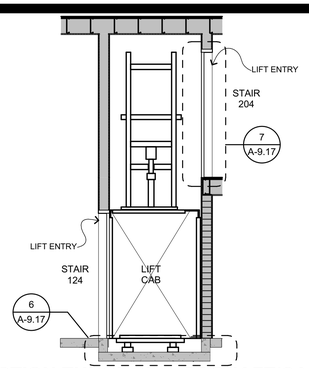

SECTION THROUGH LIFT SHAFT/CAB 9

1/4" = 1'-0"

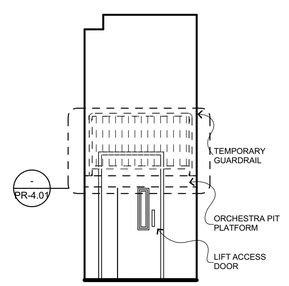

STAGE LIFT WEST ELEVATION 5

1/4" = 1'-0"

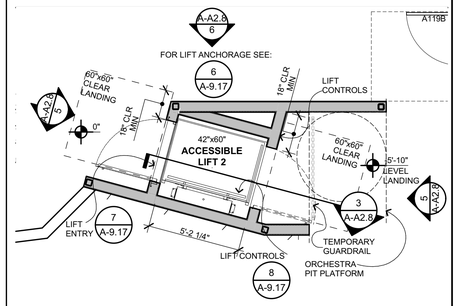

LIFT 2 @ FIRST FLOOR/ PIT 1

1/4" = 1'-0"

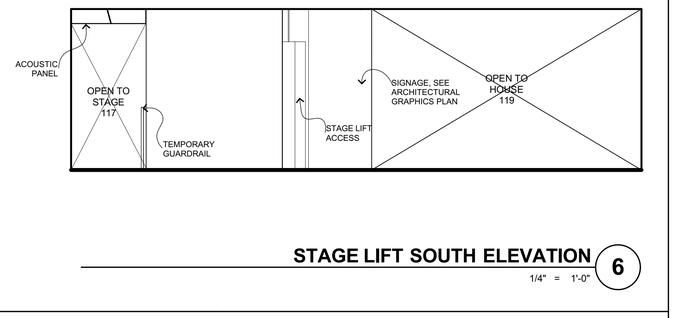

STAGE LIFT SOUTH ELEVATION 6

1/4" = 1'-0"

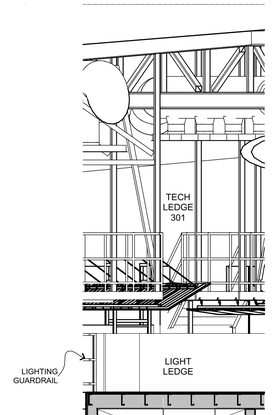

STAGE LIFT SECTION 3

1:51.133



STAGE LIFT EAST ELEVATION 7

1/4" = 1'-0"

QUATTROCCHI KWOK ARCHITECTS
Main Office:
636 Fifth Street, Santa Rosa, CA 95404
Pleasanton Office:
600 Main Street, Suite E,
Pleasanton, CA 94566
(707) 576-0829

LICENSED ARCHITECT
JIM THEISS
LICENSE # C22643
EXP JUNE 30, 2021
STATE OF CALIFORNIA

SIGNED: AUGUST 13, 2019

FREEDOM HIGH SCHOOL

PERFORMING ARTS AND CTE FACILITIES

1050 NEROLY RD,
OAKLEY, CA 94561

LIBERTY UNION HIGH SCHOOL DISTRICT

ARCH PROJECT NO: 1739.00
DRAWN BY:
DRAWING SCALE:
PTN: 61721-0068

BID SET

AUGUST 13, 2019

SHEET TITLE

BLDG A ENLARGED STAIR AND LIFT PLANS

SHEET NUMBER

A-A2.8

BIM Server: BIMCLOUD-QKA - BIMcloud/1739.00 - Freedom High School/1739.00 FREEDOM HS Performing Arts Center;8/6/2019 5:11 PM

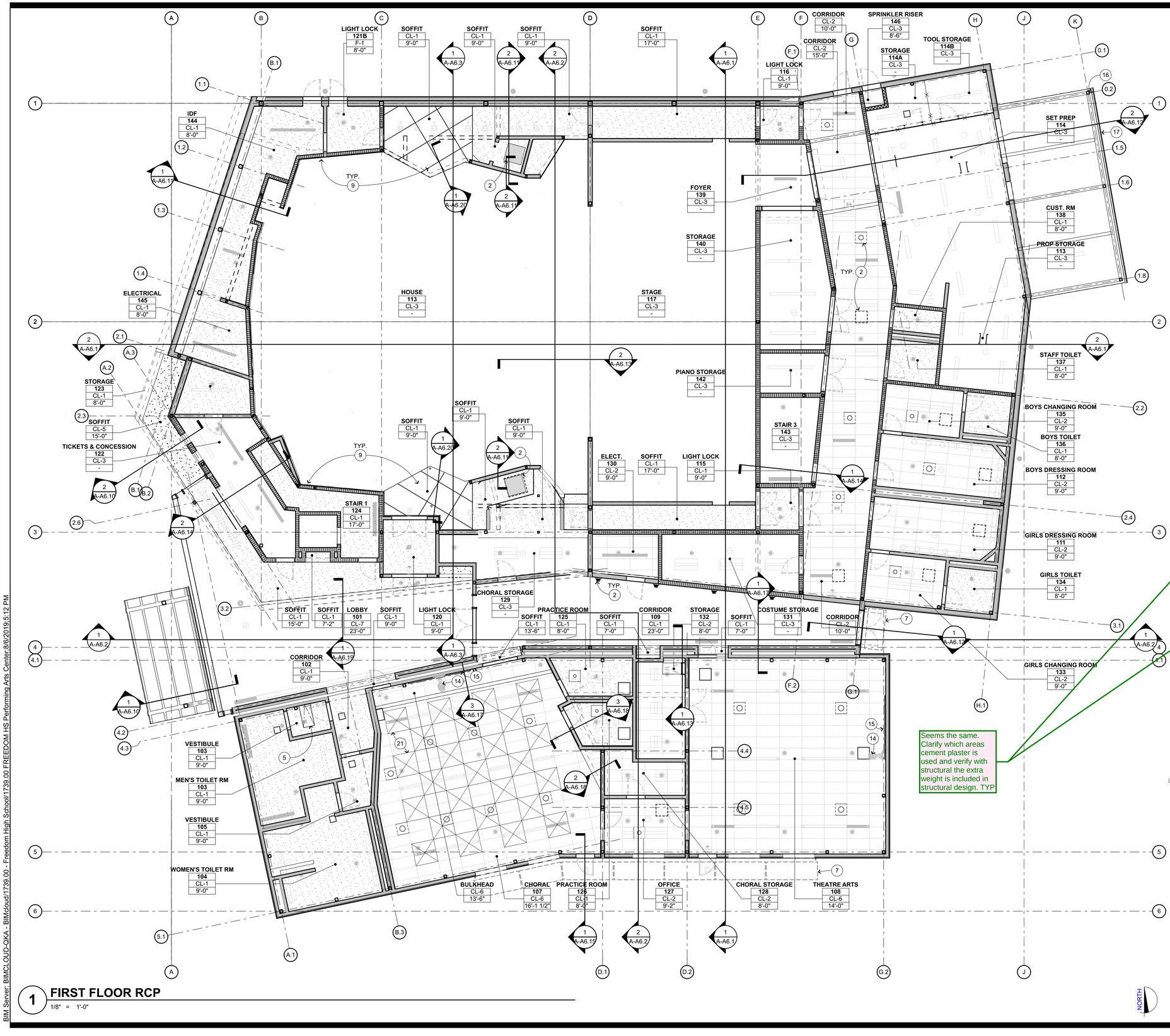

1 FIRST FLOOR RCP

1/8" = 1'-0"

REFLECTED CEILING PLAN KEYNOTES

NOT ALL KEYNOTES MAY APPLY TO THIS SHEET

1. STRUCTURAL ITEM, S.S.D.
2. MECHANICAL ITEM, S.M.D.
3. PLUMBING ITEM, S.P.D.
4. ELECTRICAL ITEM, S.E.D.
5. 2'X2' CEILING ACCESS PANEL
6. 2'X4' ROOF ACCESS HATCH
7. CANOPY
8. NOT USED
9. ACOUSTIC WALL PANELS
10. ACOUSTIC REFLECTORS
11. SUSPENDED ACOUSTIC CEILING
12. TENSION GRID, S.S.D.
13. CAT WALK, S.S.D.
14. WALL MOUNTED SHORT THROW PROJECTOR, S.T.P.
15. MOTORIZED PROJECTION SCREEN
16. RAIN WATER LEADER
17. GUTTER
18. OPEN TO STRUCTURE ABOVE
19. CLERESTORY STOREFRONT SYSTEM
20. SOFFIT VENT
21. SOUND DIFFUSER

REFLECTED CEILING PLAN GENERAL NOTES

1. NOTES & SYMBOLS ARE TO APPLY TO ALL AREAS OF SIMILAR GRAPHIC REPRESENTATION. SUCH INDICATIONS MAYBE LIMITED TO PROMOTE CLARITY OR AVOID REDUNDACY. NO LIMITATION OF APPLICATION SHALL BE CONSTRUED WITHOUT SPECIFIC NOTATION.
2. PENDANT LIGHT FIXTURE LOCATION DIMENSIONS ARE NOMINAL. VERIFY IN FIELD TO MAINTAIN 45° SWING CLEARANCES TO FIXED ELEMENTS.
3. S.E.D. FOR HORNS, SPEAKERS, PULL STATIONS, LIGHT FIXTURES AND OTHER FEATURES NOT OTHERWISE SHOWN.
4. S.E.D. FOR EXIT SIGNS & EMERGENCY LIGHTING CONDITIONS.
5. S.M.D. FOR PIPING, REGISTERS & VENTS NOT OTHERWISE SHOWN. MECHANICAL DUCT LOCATION DIMENSIONS ARE NOMINAL. VERIFY IN FIELD TO MAINTAIN CLEARANCES TO FIXED ELEMENTS.
6. CBC TABLE 601- ROOFS AND THEIR MEMBERS OTHER THAN THE STRUCTURAL FRAME MAY BE OF UNPROTECTED NON-COMBUSTIBLE MATERIALS WHEN EVERY PART OF ROOF FRAMING INCLUDING THE STRUCTURAL FRAME IS 20 FEET OR MORE ABOVE THE FLOOR IMMEDIATELY BELOW

REFLECTED CEILING PLAN LEGEND

ROOM NAME
ROOM #
CL-XX
X'-X"

CL-XX REFERS TO CEILING FINISH CODE SEE BELOW. X'-X" REFERS TO FINISHED CEILING HEIGHT AFF. WHERE CEILING HEIGHT IS INDICATED AS "OPEN" OR " - ", ROOM IS OPEN TO STRUCTURE ABOVE. FOR CEILING CONFIGURATION & HEIGHT WHERE CEILING HEIGHT IS INDICATED AS CURVED, SLOPING, OR VARIES, REFER TO SECTION DRAWINGS.

GYPSUM BOARD, SEE FINISH CODE

EXPOSED ROOF/FLOOR STRUCTURE ABOVE

2'x4' SUSPENDED CEILING SYSTEM W/ ACOUSTIC TILE, SEE FINISH CODES

EXTERIOR CEMENT PLASTER

2'x2' SUSPENDED CEILING SYSTEM W/ ACOUSTIC TILE, SEE FINISH CODES

ELECTRICAL ITEMS, S.E.D.

MECHANICAL ITEMS, S.M.D.

FIRE SPRINKLERS, S.F.P.D.

CEILING FINISH CODES

CL-1	GYPSUM BOARD o/ FRAMING PER
CL-2	MINERAL FIBER 4x2 ACOUSTIC CEILING TILE (NRC 0.70/CAC 35) MIN
CL-3	NO CEILING - OPEN TO STRUCTURE ABOVE
CL-4	BLACK MINERAL FIBER 4x2 ACOUSTIC CEILING TILE (NRC 0.70) MIN
CL-5	EXTERIOR CEMENT PLASTER
CL-6	MINERAL FIBER 4x2 ACOUSTIC CEILING TILE (NRC 0.80/CAC 35) MIN
CL-7	FIBERGLASS 2x2 ACOUSTIC CEILING TILE (NRC 0.90) MIN
CL-8	ACOUSTICAL CEILING PANELS

KEY PLAN

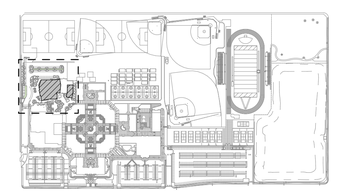

QUATTROCCHI KWOK ARCHITECTS
Main Office:
636 Fifth Street, Santa Rosa, CA 95404
Pleasanton Office:
600 Main Street, Suite E,
Pleasanton, CA 94566
(707) 576-0829

LICENSED ARCHITECT
JIM THEISS
LICENSE # C22643
EXP JUNE 30, 2021
STATE OF CALIFORNIA

SIGNED: AUGUST 13, 2019

FREEDOM HIGH SCHOOL

PERFORMING ARTS AND CTE FACILITIES

1050 NEROLY RD,
OAKLEY, CA 94561

LIBERTY UNION HIGH SCHOOL DISTRICT

ARCH PROJECT NO:	1739.00
DRAWN BY:	
DRAWING SCALE:	
PTN:	61721-0068

BID SET

AUGUST 13, 2019

SHEET TITLE

BLDG A FIRST FLOOR REFLECTED CEILING PLAN

SHEET NUMBER

A-A3.1

BIM Server: BIMCLOUD-QKA - BIMcloud/1739.00 - Freedom High School/1739.00 FREEDOM HS Performing Arts Center;8/6/2019-5:12 PM

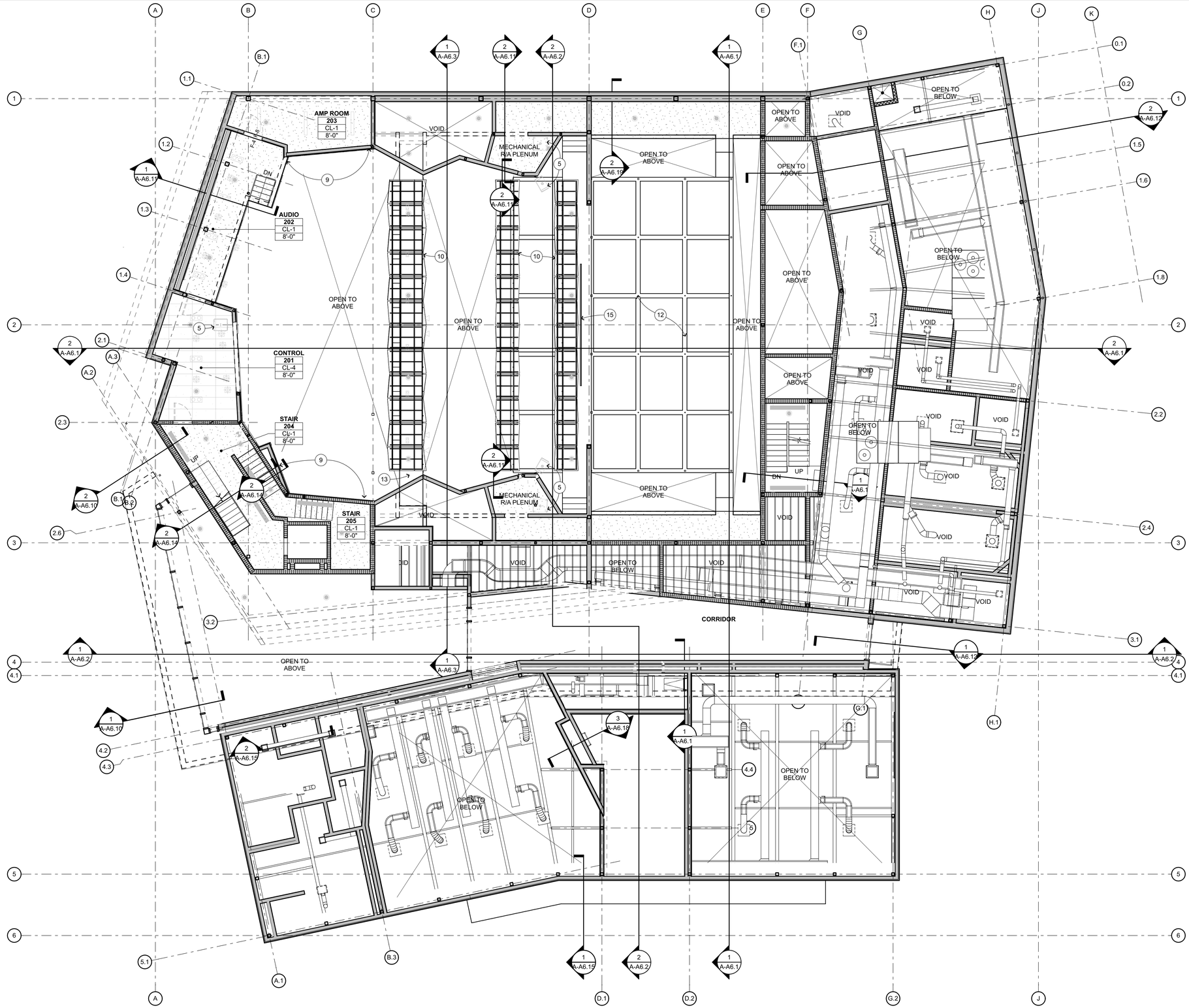

1 CONTROL ROOM LEVEL RCP

1/8" = 1'-0"

REFLECTED CEILING PLAN KEYNOTES

NOT ALL KEYNOTES MAY APPLY TO THIS SHEET

1. STRUCTURAL ITEM, S.S.D.
2. MECHANICAL ITEM, S.M.D.
3. PLUMBING ITEM, S.P.D.
4. ELECTRICAL ITEM, S.E.D.
5. 2'X2' CEILING ACCESS PANEL — 6 / A-10.5
6. 2'X4' ROOF ACCESS HATCH — 2 / A-9.15
7. CANOPY — 2 / A-9.16
8. NOT USED
9. ACOUSTIC WALL PANELS — 11 / A-10.8, 15 / A-10.8
10. ACOUSTIC REFLECTORS — 6 / A-10.8
11. SUSPENDED ACOUSTIC CEILING
12. TENSION GRID, S.S.D.
13. CAT WALK, S.S.D.
14. WALL MOUNTED SHORT THROW PROJECTOR, S.T.P. — 2 / AV-7.13, 1 / A-10.1
15. MOTORIZED PROJECTION SCREEN
16. RAIN WATER LEADER
17. GUTTER
18. OPEN TO STRUCTURE ABOVE
19. CLERESTORY STOREFRONT SYSTEM
20. SOFFIT VENT
21. SOUND DIFFUSER - / A-10.4

REFLECTED CEILING PLAN GENERAL NOTES

1. NOTES & SYMBOLS ARE TO APPLY TO ALL AREAS OF SIMILAR GRAPHIC REPRESENTATION. SUCH INDICATIONS MAYBE LIMITED TO PROMOTE CLARITY OR AVOID REDUNDACY. NO LIMITATION OF APPLICATION SHALL BE CONSTRUED WITHOUT SPECIFIC NOTATION.
2. PENDANT LIGHT FIXTURE LOCATION DIMENSIONS ARE NOMINAL. VERIFY IN FIELD TO MAINTAIN 45° SWING CLEARANCES TO FIXED ELEMENTS.
3. S.E.D. FOR HORNS, SPEAKERS, PULL STATIONS, LIGHT FIXTURES AND OTHER FEATURES NOT OTHERWISE SHOWN.
4. S.E.D. FOR EXIT SIGNS & EMERGENCY LIGHTING CONDITIONS.
5. S.M.D. FOR PIPING, REGISTERS & VENTS NOT OTHERWISE SHOWN. MECHANICAL DUCT LOCATION DIMENSIONS ARE NOMINAL. VERIFY IN FIELD TO MAINTAIN CLEARANCES TO FIXED ELEMENTS.
6. CBC TABLE 601- ROOFS AND THEIR MEMBERS OTHER THAN THE STRUCTURAL FRAME MAY BE OF UNPROTECTED NON-COMBUSTIBLE MATERIALS WHEN EVERY PART OF ROOF FRAMING INCLUDING THE STRUCTURAL FRAME IS 20 FEET OR MORE ABOVE THE FLOOR IMMEDIATELY BELOW

REFLECTED CEILING PLAN LEGEND

10'-0" / ROOM NAME / ROOM # / CL-XX / X'-X" — CL-XX REFERS TO CEILING FINISH CODE SEE BELOW. X'-X" REFERS TO FINISHED CEILING HEIGHT AFF. WHERE CEILING HEIGHT IS INDICATED AS "OPEN" OR " - ", ROOM IS OPEN TO STRUCTURE ABOVE. FOR CEILING CONFIGURATION & HEIGHT WHERE CEILING HEIGHT IS INDICATED AS CURVED, SLOPING, OR VARIES, REFER TO SECTION DRAWINGS.

GYPSUM BOARD, SEE FINISH CODE

EXPOSED ROOF/FLOOR STRUCTURE ABOVE

2'x4' SUSPENDED CEILING SYSTEM W/ ACOUSTIC TILE, SEE FINISH CODES

EXTERIOR CEMENT PLASTER

2'x2' SUSPENDED CEILING SYSTEM W/ ACOUSTIC TILE, SEE FINISH CODES

ELECTRICAL ITEMS, S.E.D.

MECHANICAL ITEMS, S.M.D.

FIRE SPRINKLERS, S.F.P.D.

CEILING FINISH CODES

CL-1	GYPSUM BOARD o/ FRAMING PER
CL-2	MINERAL FIBER 4x2 ACOUSTIC CEILING TILE (NRC 0.70/CAC 35) MIN
CL-3	NO CEILING - OPEN TO STRUCTURE ABOVE
CL-4	BLACK MINERAL FIBER 4x2 ACOUSTIC CEILING TILE (NRC 0.70) MIN
CL-5	EXTERIOR CEMENT PLASTER
CL-6	MINERAL FIBER 4x2 ACOUSTIC CEILING TILE (NRC 0.80/CAC 35) MIN
CL-7	FIBERGLASS 2x2 ACOUSTIC CEILING TILE (NRC 0.90) MIN
CL-8	ACOUSTICAL CEILING PANELS

KEY PLAN

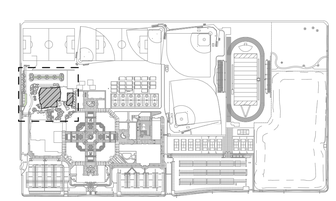

NORTH

QUATTROCCHI KWOK ARCHITECTS

Main Office:
636 Fifth Street, Santa Rosa, CA 95404
Pleasanton Office:
600 Main Street, Suite E,
Pleasanton, CA 94566
(707) 576-0829

LICENSED ARCHITECT — JIM THEISS — LICENSE # C22643 — EXP JUNE 30, 2021 — STATE OF CALIFORNIA

SIGNED: AUGUST 13, 2019

FREEDOM HIGH SCHOOL

PERFORMING ARTS AND CTE FACILITIES

1050 NEROLY RD,
OAKLEY, CA 94561

LIBERTY UNION HIGH SCHOOL DISTRICT

ARCH PROJECT NO:	1739.00
DRAWN BY:	
DRAWING SCALE:	
PTN:	61721-0068

BID SET

AUGUST 13, 2019

SHEET TITLE

BLDG A CONTROL BOOTH LEVEL REFLECTED CEILING PLAN

SHEET NUMBER

A-A3.2

BIM Server: BIMCLOUD-QKA - BIMcloud/1739.00 - Freedom High School/1739.00 FREEDOM HS Performing Arts Center.8/6/2019 5:12 PM

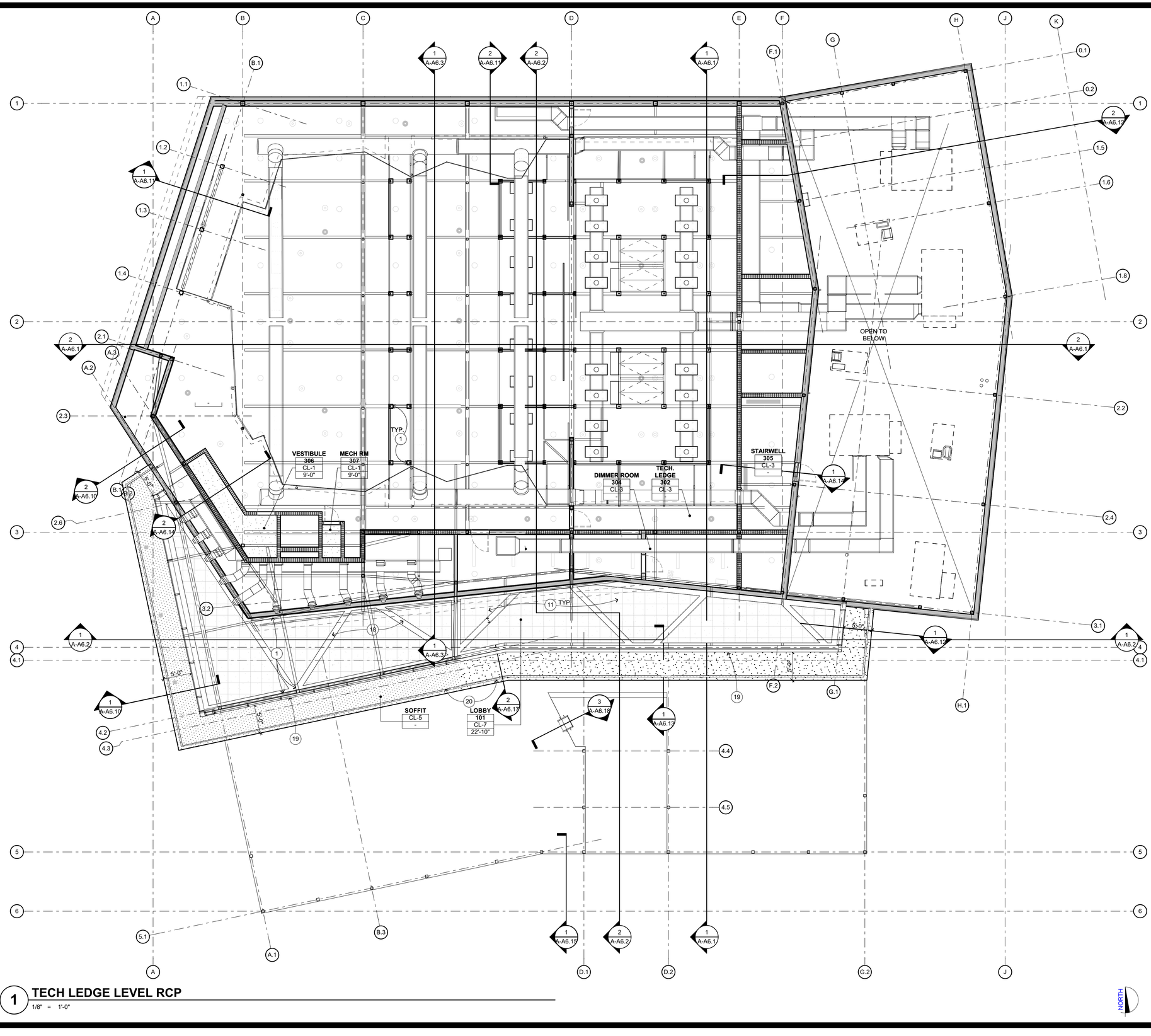

1 TECH LEDGE LEVEL RCP

1/8" = 1'-0"

REFLECTED CEILING PLAN KEYNOTES

NOT ALL KEYNOTES MAY APPLY TO THIS SHEET

1. STRUCTURAL ITEM, S.S.D.
2. MECHANICAL ITEM, S.M.D.
3. PLUMBING ITEM, S.P.D.
4. ELECTRICAL ITEM, S.E.D.
5. 2'X2' CEILING ACCESS PANEL
6. 2'X4' ROOF ACCESS HATCH
7. CANOPY
8. NOT USED
9. ACOUSTIC WALL PANELS
10. ACOUSTIC REFLECTORS
11. SUSPENDED ACOUSTIC CEILING
12. TENSION GRID, S.S.D.
13. CAT WALK, S.S.D.
14. WALL MOUNTED SHORT THROW PROJECTOR, S.T.P.
15. MOTORIZED PROJECTION SCREEN
16. RAIN WATER LEADER
17. GUTTER
18. OPEN TO STRUCTURE ABOVE
19. CLERESTORY STOREFRONT SYSTEM
20. SOFFIT VENT
21. SOUND DIFFUSER

REFLECTED CEILING PLAN GENERAL NOTES

1. NOTES & SYMBOLS ARE TO APPLY TO ALL AREAS OF SIMILAR GRAPHIC REPRESENTATION. SUCH INDICATIONS MAYBE LIMITED TO PROMOTE CLARITY OR AVOID REDUNDACY. NO LIMITATION OF APPLICATION SHALL BE CONSTRUED WITHOUT SPECIFIC NOTATION.
2. PENDANT LIGHT FIXTURE LOCATION DIMENSIONS ARE NOMINAL. VERIFY IN FIELD TO MAINTAIN 45° SWING CLEARANCES TO FIXED ELEMENTS.
3. S.E.D. FOR HORNS, SPEAKERS, PULL STATIONS, LIGHT FIXTURES AND OTHER FEATURES NOT OTHERWISE SHOWN.
4. S.E.D. FOR EXIT SIGNS & EMERGENCY LIGHTING CONDITIONS.
5. S.M.D. FOR PIPING, REGISTERS & VENTS NOT OTHERWISE SHOWN. MECHANICAL DUCT LOCATION DIMENSIONS ARE NOMINAL. VERIFY IN FIELD TO MAINTAIN CLEARANCES TO FIXED ELEMENTS.
6. CBC TABLE 601- ROOFS AND THEIR MEMBERS OTHER THAN THE STRUCTURAL FRAME MAY BE OF UNPROTECTED NON-COMBUSTIBLE MATERIALS WHEN EVERY PART OF ROOF FRAMING INCLUDING THE STRUCTURAL FRAME IS 20 FEET OR MORE ABOVE THE FLOOR IMMEDIATELY BELOW

REFLECTED CEILING PLAN LEGEND

ROOM NAME / ROOM # / CL-XX / X'-X" / 10'-0" — CL-XX REFERS TO CEILING FINISH CODE SEE BELOW. X'-X" REFERS TO FINISHED CEILING HEIGHT AFF. WHERE CEILING HEIGHT IS INDICATED AS "OPEN" OR " - ", ROOM IS OPEN TO STRUCTURE ABOVE. FOR CEILING CONFIGURATION & HEIGHT WHERE CEILING HEIGHT IS INDICATED AS CURVED, SLOPING, OR VARIES, REFER TO SECTION DRAWINGS.

GYPSUM BOARD, SEE FINISH CODE

EXPOSED ROOF/FLOOR STRUCTURE ABOVE

2'x4' SUSPENDED CEILING SYSTEM W/ ACOUSTIC TILE, SEE FINISH CODES

EXTERIOR CEMENT PLASTER

2'x2' SUSPENDED CEILING SYSTEM W/ ACOUSTIC TILE, SEE FINISH CODES

ELECTRICAL ITEMS, S.E.D.

MECHANICAL ITEMS, S.M.D.

FIRE SPRINKLERS, S.F.P.D.

CEILING FINISH CODES

CL-1	GYPSUM BOARD o/ FRAMING PER
CL-2	MINERAL FIBER 4x2 ACOUSTIC CEILING TILE (NRC 0.70/CAC 35) MIN
CL-3	NO CEILING - OPEN TO STRUCTURE ABOVE
CL-4	BLACK MINERAL FIBER 4x2 ACOUSTIC CEILING TILE (NRC 0.70) MIN
CL-5	EXTERIOR CEMENT PLASTER
CL-6	MINERAL FIBER 4x2 ACOUSTIC CEILING TILE (NRC 0.80/CAC 35) MIN
CL-7	FIBERGLASS 2x2 ACOUSTIC CEILING TILE (NRC 0.90) MIN
CL-8	ACOUSTICAL CEILING PANELS

KEY PLAN

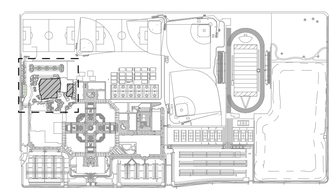

QUATTROCCHI KWOK ARCHITECTS
Main Office:
636 Fifth Street, Santa Rosa, CA 95404
Pleasanton Office:
600 Main Street, Suite E,
Pleasanton, CA 94566
(707) 576-0829

LICENSED ARCHITECT
JIM THEISS
LICENSE # C22643
EXP JUNE 30, 2021
STATE OF CALIFORNIA

SIGNED: AUGUST 13, 2019

FREEDOM HIGH SCHOOL

PERFORMING ARTS AND CTE FACILITIES

1050 NEROLY RD,
OAKLEY, CA 94561

LIBERTY UNION HIGH SCHOOL DISTRICT

ARCH PROJECT NO:		1739.00
DRAWN BY:		
DRAWING SCALE:		
PTN:		61721-0068

BID SET

AUGUST 13, 2019

SHEET TITLE

BLDG A TECH LEDGE REFLECTED CEILING PLAN

SHEET NUMBER

A-A3.3

BIM Server: BIMCLOUD-QKA - BIMcloud/1739.00 - Freedom High School/1739.00 FREEDOM HS Performing Arts Center;8/6/2019;5:12 PM

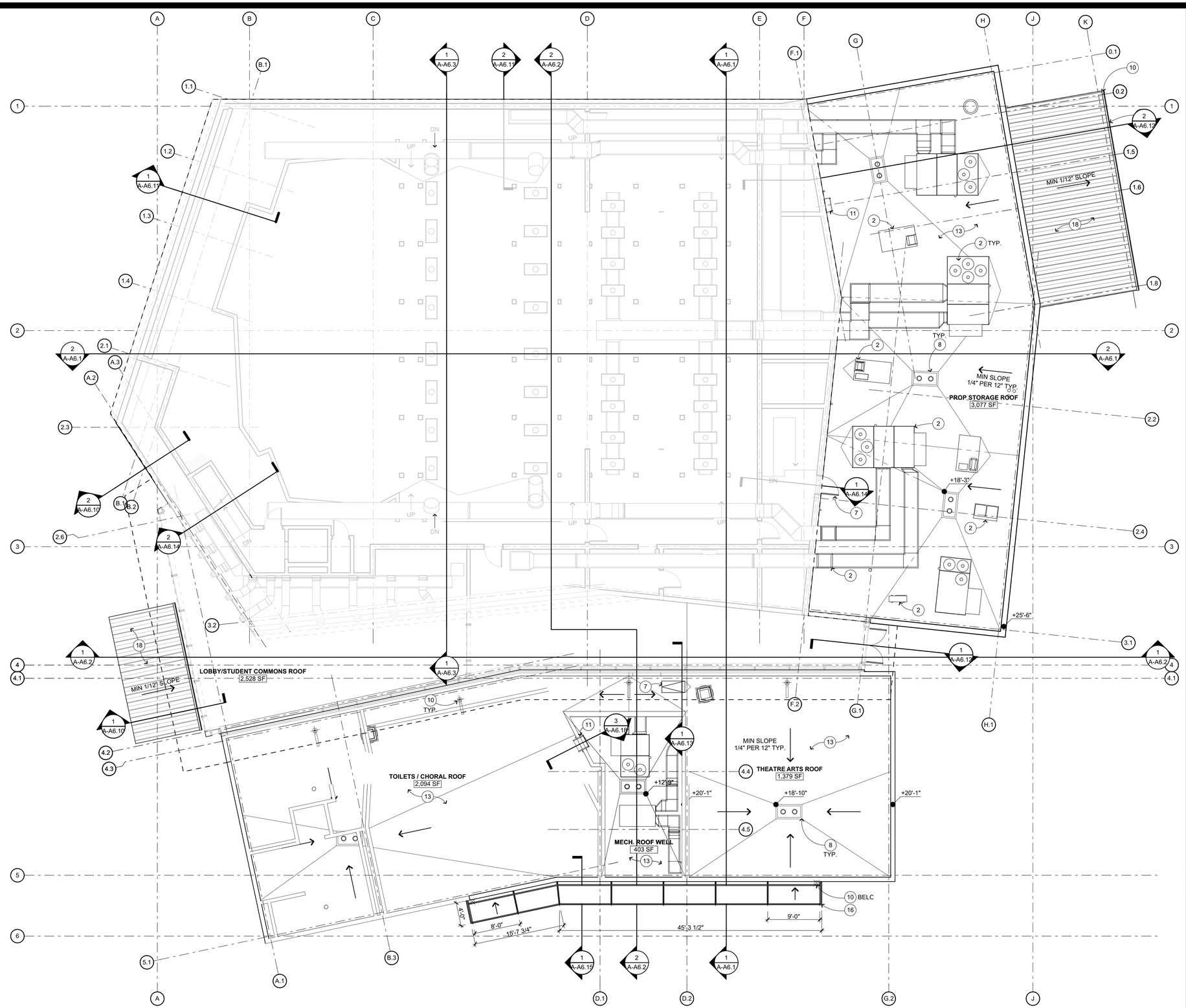

LOWER ROOF PLAN

1/8" = 1'-0"

ROOF PLAN KEYNOTES

NOT ALL KEYNOTES MAY APPLY TO THIS SHEET

1. STRUCTURAL ITEM, S.S.D.
2. MECHANICAL ITEM, S.M.D.
3. PLUMBING ITEM, S.P.D.
4. ELECTRICAL ITEM, S.E.D.
5. 2'X4' ROOF ACCESS HATCH — 2 A-9.15
6. SMOKE & HEAT VENT — 15 A-9.15
7. ROOF ACCESS DOOR
8. ROOF DRAIN — 16 A-9.11
9. GUTTER — 2 A-9.14
10. RAIN WATER LEADER — 3 A-9.14, 4 A-9.14 AS OCCURS
11. LADDER — 14 A-9.15, 18 A-9.15
12. EQUIPMENT SUPPORT — M-4.1
13. MODIFIED BITUMEN ROOFING O/ METAL DECK — 1 A-9.11
14. MODIFIED BITUMEN ROOFING O/ DOVETAIL METAL DECK — 2 A-9.11
15. NOT USED
16. RAIN CANOPY — 2 A-9.16
17. PRE-FORMED METAL ROOFING — 1 A-9.8
18. PRE-FORMED METAL ROOFING O/ UNCONDITIONED SPACE — 6 A-9.10

ROOF PLAN GENERAL NOTES

1. MINIMUM THICKNESS OF RIGID INSULATION TO BE 1" AT LOW POINT OF ROOF. SLOPE MIN. 1/4": 12" TO DRAIN. ALL RIGID INSULATION OVERLAID WITH WITH 1/2" PERLITE BOARD.
2. ALL ROOFING TO BE CLASS A.
3. REFER TO MECHANICAL AND ELECTRICAL DRAWINGS FOR ROOF PENETRATION LOCATIONS NOT OTHERWISE INDICATED, TYPICAL.
4. MECHANICAL UNIT MOUNTING CURBS S.M.D.
5. MECHANICAL OR PLUMBING VENT FLASHING, BOOTS, SEE — 15 A-9.11, 8 A-9.8

ROOF PLAN LEGEND

+0'-0" — DIMENSION INDICATING TOP OF ROOF LEVEL. SEE DETAILS FOR TOP OF ROOF LOCATION WITHIN ASSEMBLY

PREFORMED METAL ROOFING

MODIFIED BITUMEN ROOFING O/ MTL DECK

MODIFIED BITUMEN ROOFING O/ DOVETAIL MTL DECK

KEY PLAN

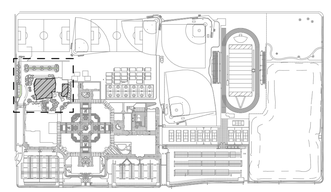

QUATTROCCHI KWOK ARCHITECTS
Main Office:
636 Fifth Street, Santa Rosa, CA 95404
Pleasanton Office:
600 Main Street, Suite E,
Pleasanton, CA 94566
(707) 576-0829

LICENSED ARCHITECT
JIM THEISS
LICENSE # C22643
EXP JUNE 30, 2021
STATE OF CALIFORNIA

SIGNED: AUGUST 13, 2019

FREEDOM HIGH SCHOOL

PERFORMING ARTS AND CTE FACILITIES

1050 NEROLY RD,
OAKLEY, CA 94561

LIBERTY UNION HIGH SCHOOL DISTRICT

ARCH PROJECT NO:	1739.00
DRAWN BY:	
DRAWING SCALE:	
PTN:	61721-0068

BID SET

AUGUST 13, 2019

SHEET TITLE

BLDG A LOWER ROOF PLAN

SHEET NUMBER

A-A4.1

BIM Server: BIMCLOUD-QKA - BIMcloud/1739.00 - Freedom High School/1739.00 FREEDOM HS Performing Arts Center;8/6/2019;5:13 PM

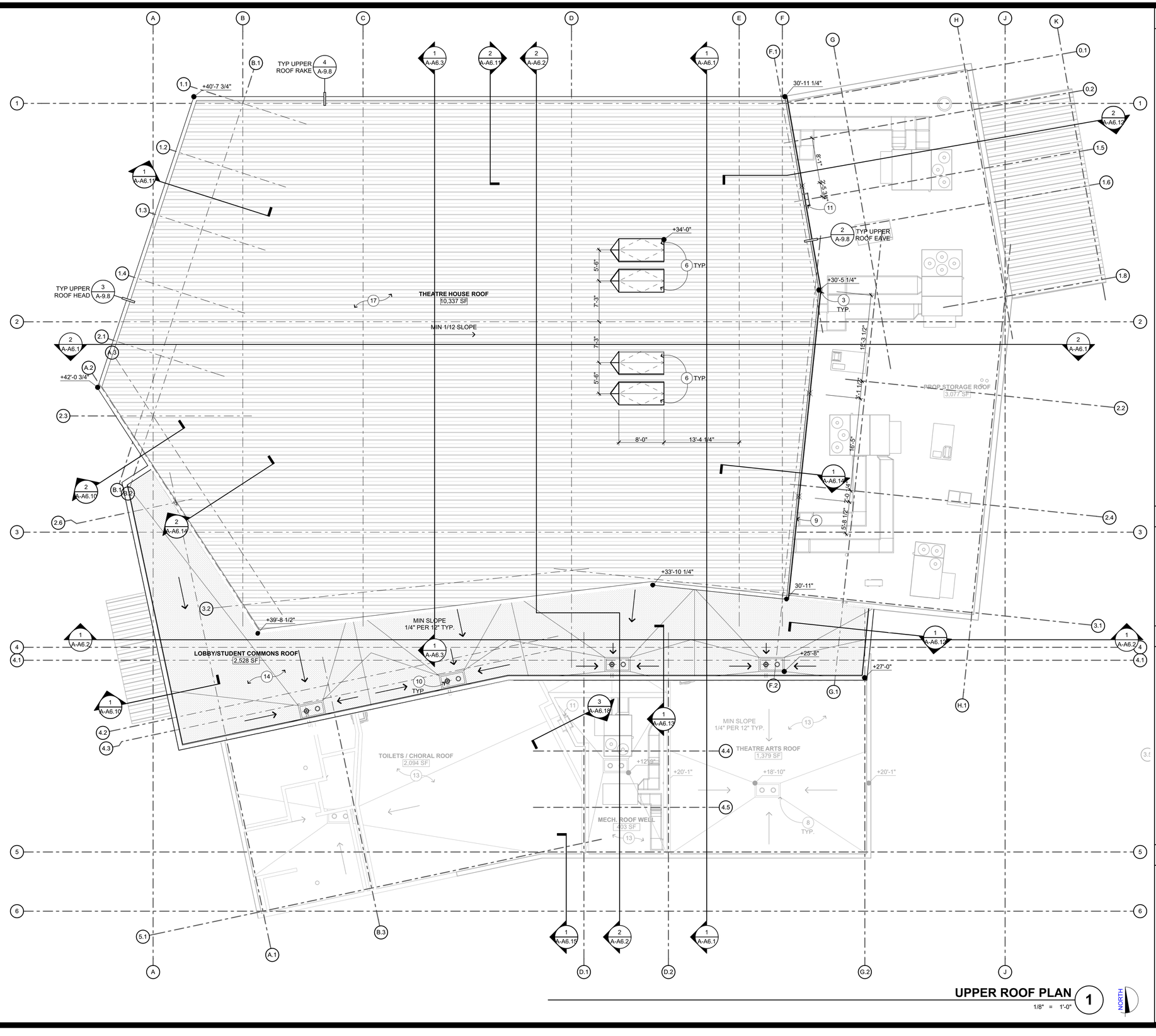

ROOF PLAN KEYNOTES

NOT ALL KEYNOTES MAY APPLY TO THIS SHEET

1. STRUCTURAL ITEM, S.S.D.
2. MECHANICAL ITEM, S.M.D.
3. PLUMBING ITEM, S.P.D.
4. ELECTRICAL ITEM, S.E.D.
5. 2'X4' ROOF ACCESS HATCH — 2 / A-9.15
6. SMOKE & HEAT VENT — 15 / A-9.15
7. ROOF ACCESS DOOR
8. ROOF DRAIN — 16 / A-9.11
9. GUTTER — 2 / A-9.14
10. RAIN WATER LEADER — 3 / A-9.14, 4 / A-9.14 AS OCCURS
11. LADDER — 14 / A-9.15, 18 / A-9.15
12. EQUIPMENT SUPPORT — M-4.1
13. MODIFIED BITUMEN ROOFING O/ METAL DECK — 1 / A-9.11
14. MODIFIED BITUMEN ROOFING O/ DOVETAIL METAL DECK — 2 / A-9.11
15. NOT USED
16. RAIN CANOPY — 2 / A-9.16
17. PRE-FORMED METAL ROOFING — 1 / A-9.8
18. PRE-FORMED METAL ROOFING O/ UNCONDITIONED SPACE — 6 / A-9.10

ROOF PLAN GENERAL NOTES

1. MINIMUM THICKNESS OF RIGID INSULATION TO BE 1" AT LOW POINT OF ROOF. SLOPE MIN. 1/4": 12" TO DRAIN. ALL RIGID INSULATION OVERLAID WITH WITH 1/2" PERLITE BOARD.
2. ALL ROOFING TO BE CLASS A.
3. REFER TO MECHANICAL AND ELECTRICAL DRAWINGS FOR ROOF PENETRATION LOCATIONS NOT OTHERWISE INDICATED, TYPICAL.
4. MECHANICAL UNIT MOUNTING CURBS S.M.D.
5. MECHANICAL OR PLUMBING VENT FLASHING, BOOTS, SEE — 15 / A-9.11, 8 / A-9.8

ROOF PLAN LEGEND

+0'-0" — DIMENSION INDICATING TOP OF ROOF LEVEL. SEE DETAILS FOR TOP OF ROOF LOCATION WITHIN ASSEMBLY

PREFORMED METAL ROOFING

MODIFIED BITUMEN ROOFING O/ MTL DECK

MODIFIED BITUMEN ROOFING O/ DOVETAIL MTL DECK

KEY PLAN

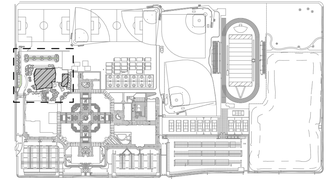

UPPER ROOF PLAN 1

1/8" = 1'-0"

NORTH

QUATTROCCHI KWOK ARCHITECTS
Main Office:
636 Fifth Street, Santa Rosa, CA 95404
Pleasanton Office:
600 Main Street, Suite E,
Pleasanton, CA 94566
(707) 576-0829

LICENSED ARCHITECT
JIM THEISS
LICENSE # C22643
EXP JUNE 30, 2021
STATE OF CALIFORNIA

SIGNED: AUGUST 13, 2019

FREEDOM HIGH SCHOOL

PERFORMING ARTS AND CTE FACILITIES

1050 NEROLY RD,
OAKLEY, CA 94561

LIBERTY UNION HIGH SCHOOL DISTRICT

ARCH PROJECT NO: 1739.00
DRAWN BY:
DRAWING SCALE:
PTN: 61721-0068

BID SET

AUGUST 13, 2019

SHEET TITLE

BLDG A UPPER ROOF PLAN

SHEET NUMBER

A-A4.2

BIM Server: BIMCLOUD-QKA - BIMcloud/1739.00 - Freedom High School/1739.00 FREEDOM HS Performing Arts Center.8/6/2019 5:13 PM

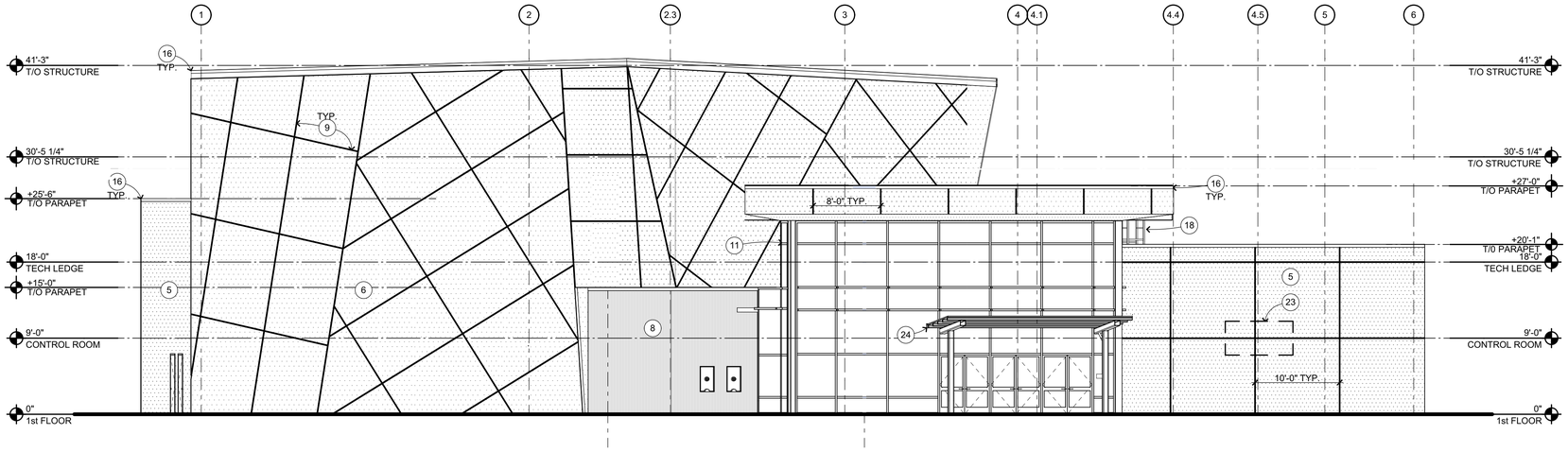

WEST ELEVATION 1

1/8" = 1'-0"

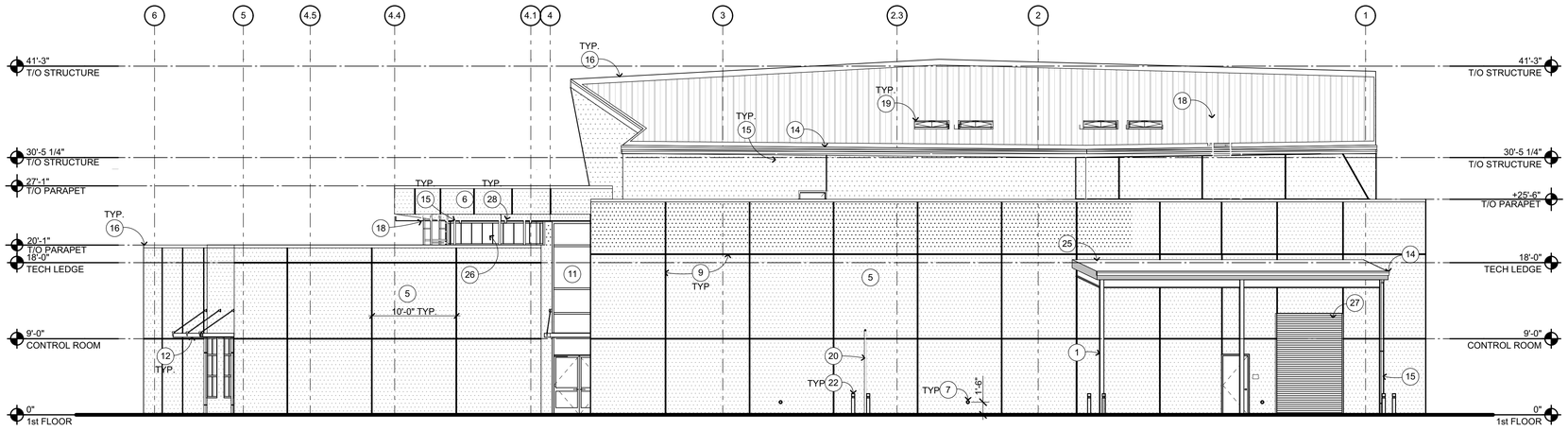

EAST ELEVATION 2

1/8" = 1'-0"

EXTERIOR ELEVATION KEYNOTES

NOT ALL KEYNOTES MAY APPLY TO THIS SHEET

1. STRUCTURAL ITEM, S.S.D.
2. MECHANICAL ITEM, S.M.D.
3. PLUMBING ITEM, S.P.D.
4. ELECTRICAL ITEM, S.E.D.
5. DARK COLORED CEMENT PLASTER — 4 / A-9.1
6. LIGHT COLORED CEMENT PLASTER — 4 / A-9.1
7. ROOF DRAIN THRU-WALL OVERFLOW — 12 / A-9.11
8. METAL WALL PANEL SYSTEM — 16 / A-9.2
9. CEMENT PLASTER CONTROL JOINT — 4 / A-9.1
10. NOT USED
11. CURTAIN WALL SYSTEM — 8 / A-9.5
12. RAIN CANOPY — 2 / A-9.16
13. NOT USED
14. GUTTER — 2 / A-9.14
15. RAIN WATER LEADER — 2 / A-9.14
16. COPING — 4 / A-9.11
17. FLASHING
18. ROOF LADDER — 18 / A-9.15
19. SMOKE & HEAT VENT — 16 / A-9.15
20. GAS LINE ENTRY
21. NOT USED
22. BOLLARDS
23. SCHOOL SIGN
24. ENTRY CANOPY
25. SET PREP CANOPY, S.S.D.
26. CLERESTORY STOREFRONT SYSTEM
27. OVERHEAD COILING DOOR — 20 / A-9.5

EXTERIOR ELEVATION LEGEND

- DARK COLORED CEMENT PLASTER
- LIGHT COLORED CEMENT PLASTER

EXTERIOR ELEVATION GENERAL NOTES

1. NOTES AND SYMBOLS ARE TO APPLY AT ALL AREAS OF SIMILAR GRAPHIC REPRESENTATION. SUCH INDICATIONS MAY BE LIMITED TO PROMOTE CLARITY OR AVOID REDUNDANCY. NO LIMITATION OF APPLICATION SHALL BE CONSTRUED WITHOUT SPECIFIC NOTATION.
2. ALL PENETRATIONS THROUGH EXTERIOR ROOF AND WALLS, AND FLOORS SHALL BE FLASHED AND SEALED WEATHER TIGHT. ALL PENETRATIONS THROUGH THE BUILDING INSULATION ENVELOPE SHALL BE PACKED WITH INSULATION.
3. PROVIDE OPENING FLASHINGS AT ALL WINDOWS, DOORS, LOUVERS AND SIMILAR WALL OPENINGS PER
4. REFER TO MECHANICAL DRAWINGS FOR REGISTERS AND VENTS NOT OTHERWISE SHOWN.
5. REFER TO ELECTRICAL DRAWINGS FOR HORNS, SPEAKERS, PULL STATIONS AND OTHER FEATURES NOT OTHERWISE SHOWN.

KEY PLAN

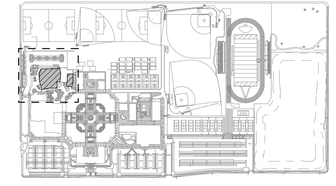

QUATTROCCHI KWOK ARCHITECTS
Main Office:
636 Fifth Street, Santa Rosa, CA 95404
Pleasanton Office:
600 Main Street, Suite E,
Pleasanton, CA 94566
(707) 576-0829

LICENSED ARCHITECT
JIM THEISS
LICENSE # C22643
EXP JUNE 30, 2021
STATE OF CALIFORNIA

SIGNED: AUGUST 13, 2019

FREEDOM HIGH SCHOOL

PERFORMING ARTS AND CTE FACILITIES

1050 NEROLY RD,
OAKLEY, CA 94561

LIBERTY UNION HIGH SCHOOL DISTRICT

ARCH PROJECT NO:	1739.00
DRAWN BY:	
DRAWING SCALE:	
PTN:	61721-0068

BID SET

AUGUST 13, 2019

SHEET TITLE

BLDG A EXTERIOR ELEVATIONS

SHEET NUMBER

A-A5.1

BIM Server: BIMCLOUD-QKA - BIMcloud/1739.00 - Freedom High School/1739.00 FREEDOM HS Performing Arts Center:8/6/2019 5:14 PM

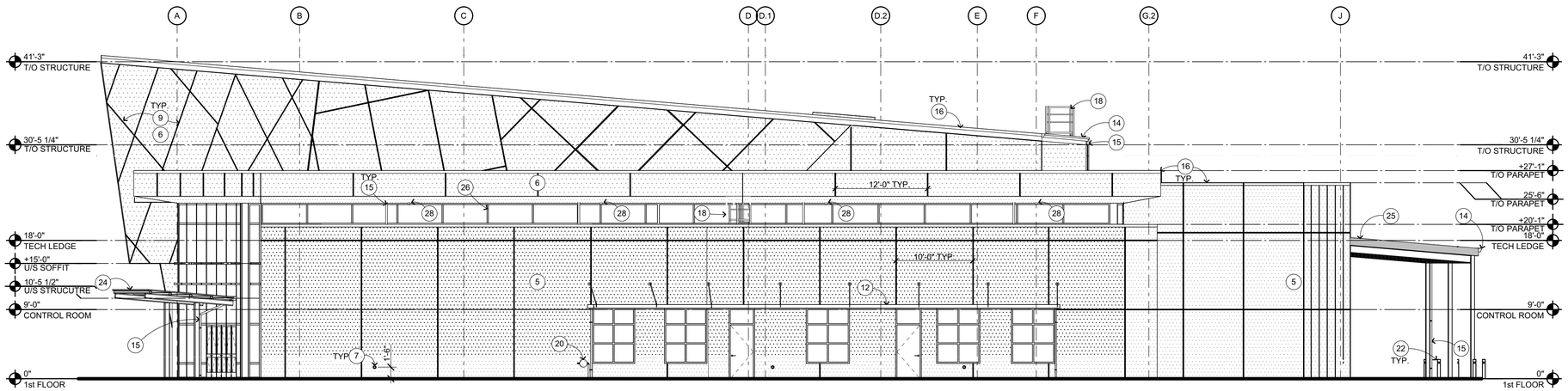

SOUTH ELEVATION 1

1/8" = 1'-0"

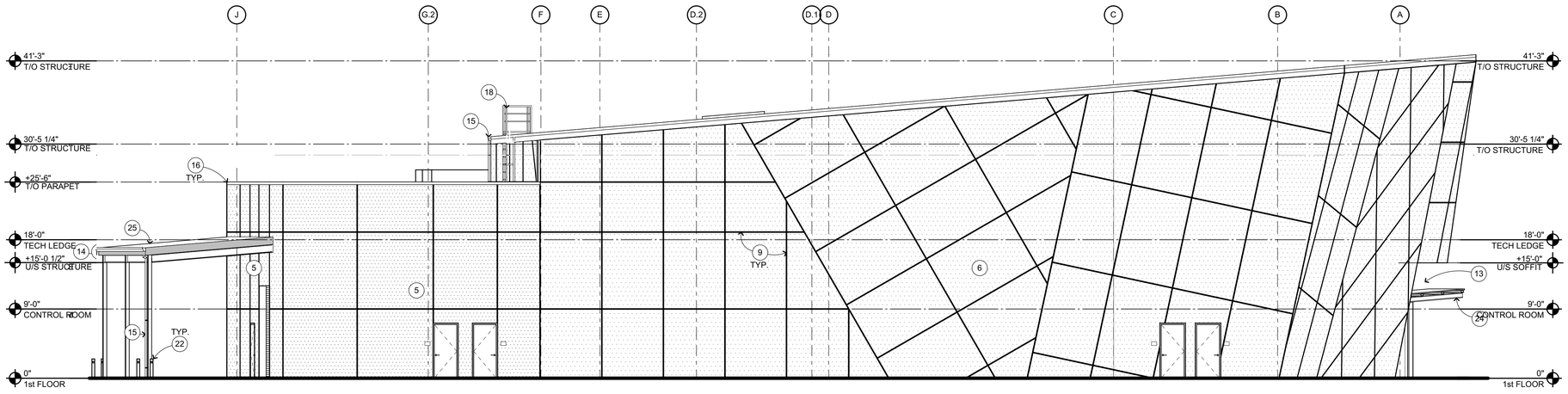

NORTH ELEVATION 2

1/8" = 1'-0"

EXTERIOR ELEVATION KEYNOTES

NOT ALL KEYNOTES MAY APPLY TO THIS SHEET

1. STRUCTURAL ITEM, S.S.D.
2. MECHANICAL ITEM, S.M.D.
3. PLUMBING ITEM, S.P.D.
4. ELECTRICAL ITEM, S.E.D.
5. DARK COLORED CEMENT PLASTER — 4 / A-9.1
6. LIGHT COLORED CEMENT PLASTER — 4 / A-9.1
7. ROOF DRAIN THRU-WALL OVERFLOW — 12 / A-9.11
8. METAL WALL PANEL SYSTEM — 16 / A-9.2
9. CEMENT PLASTER CONTROL JOINT — 4 / A-9.1
10. NOT USED
11. CURTAIN WALL SYSTEM — 8 / A-9.5
12. RAIN CANOPY — 2 / A-9.16
13. NOT USED
14. GUTTER — 2 / A-9.14
15. RAIN WATER LEADER — 2 / A-9.14
16. COPING — 4 / A-9.11
17. FLASHING
18. ROOF LADDER — 18 / A-9.15
19. SMOKE & HEAT VENT — 16 / A-9.15
20. GAS LINE ENTRY
21. NOT USED
22. BOLLARDS
23. SCHOOL SIGN
24. ENTRY CANOPY
25. SET PREP CANOPY, S.S.D.
26. CLERESTORY STOREFRONT SYSTEM
27. OVERHEAD COILING DOOR — 20 / A-9.5

EXTERIOR ELEVATION LEGEND

- DARK COLORED CEMENT PLASTER
- LIGHT COLORED CEMENT PLASTER

EXTERIOR ELEVATION GENERAL NOTES

1. NOTES AND SYMBOLS ARE TO APPLY AT ALL AREAS OF SIMILAR GRAPHIC REPRESENTATION. SUCH INDICATIONS MAY BE LIMITED TO PROMOTE CLARITY OR AVOID REDUNDANCY. NO LIMITATION OF APPLICATION SHALL BE CONSTRUED WITHOUT SPECIFIC NOTATION.
2. ALL PENETRATIONS THROUGH EXTERIOR ROOF AND WALLS, AND FLOORS SHALL BE FLASHED AND SEALED WEATHER TIGHT. ALL PENETRATIONS THROUGH THE BUILDING INSULATION ENVELOPE SHALL BE PACKED WITH INSULATION.
3. PROVIDE OPENING FLASHINGS AT ALL WINDOWS, DOORS, LOUVERS AND SIMILAR WALL OPENINGS PER
4. REFER TO MECHANICAL DRAWINGS FOR REGISTERS AND VENTS NOT OTHERWISE SHOWN.
5. REFER TO ELECTRICAL DRAWINGS FOR HORNS, SPEAKERS, PULL STATIONS AND OTHER FEATURES NOT OTHERWISE SHOWN.

KEY PLAN

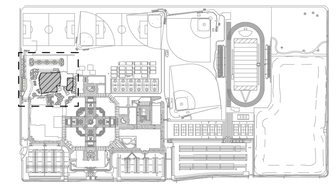

QUATTROCCHI KWOK ARCHITECTS
Main Office:
636 Fifth Street, Santa Rosa, CA 95404
Pleasanton Office:
600 Main Street, Suite E,
Pleasanton, CA 94566
(707) 576-0829

LICENSED ARCHITECT
JIM THEISS
LICENSE # C22643
EXP JUNE 30, 2021
STATE OF CALIFORNIA

SIGNED: AUGUST 13, 2019

FREEDOM HIGH SCHOOL

PERFORMING ARTS AND CTE FACILITIES

1050 NEROLY RD,
OAKLEY, CA 94561

LIBERTY UNION HIGH SCHOOL DISTRICT

ARCH PROJECT NO: 1739.00
DRAWN BY:
DRAWING SCALE:
PTN: 61721-0068

BID SET

AUGUST 13, 2019

SHEET TITLE

BLDG A EXTERIOR ELEVATIONS

SHEET NUMBER

A-A5.2

BIM Server: BIMCLOUD-QKA - BIMcloud/1739.00 - Freedom High School/1739.00 FREEDOM HS Performing Arts Center:8/6/2019 5:14 PM

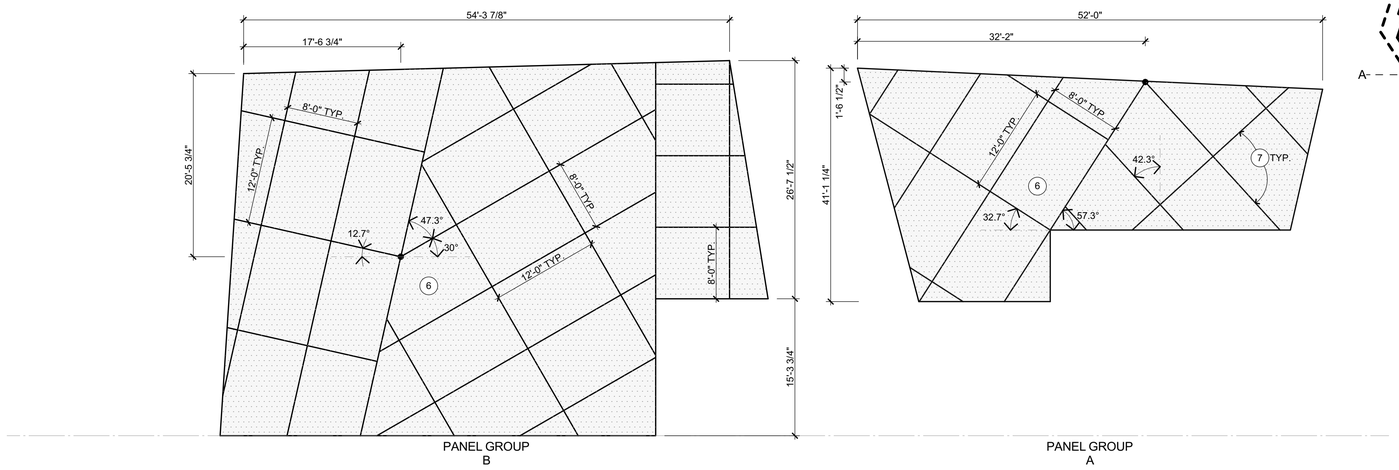

WEST ELEVATION FINISH LAYOUT 1

1/8" = 1'-0"

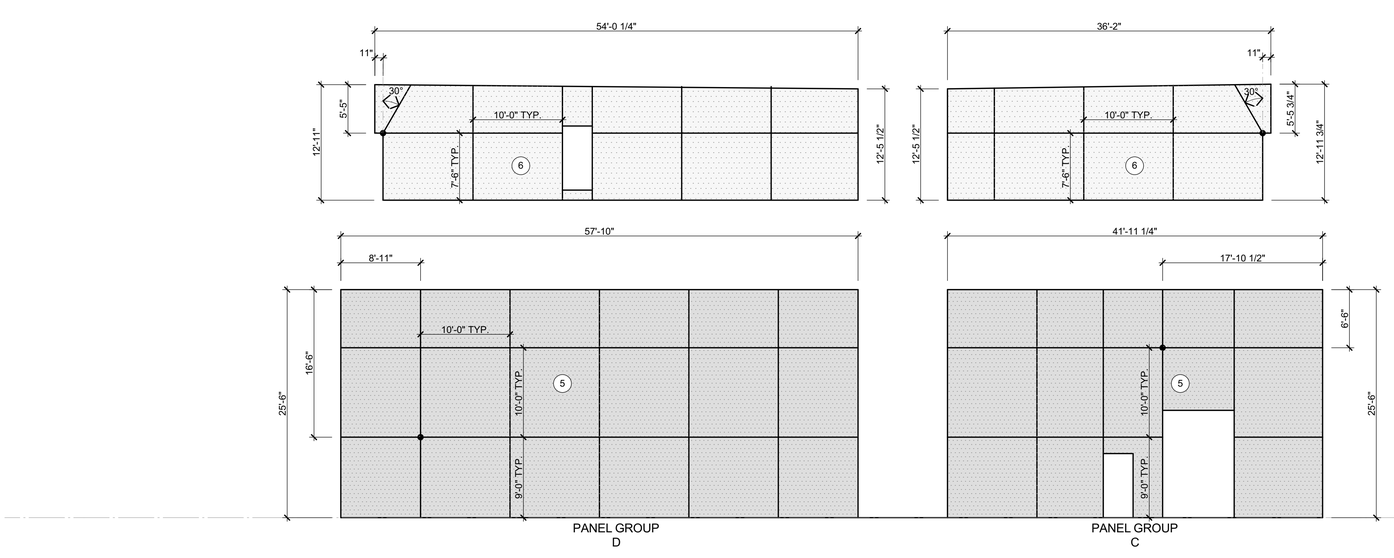

EAST ELEVATION FINISH LAYOUT 2

1/8" = 1'-0"

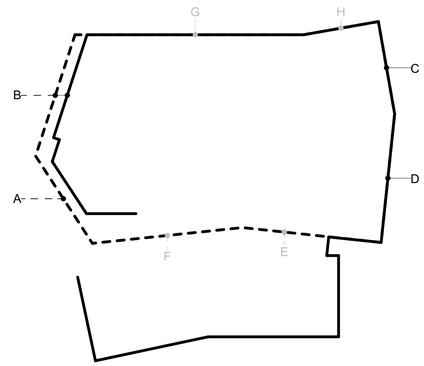

EXTERIOR ELEVATION KEYNOTES

NOT ALL KEYNOTES MAY APPLY TO THIS SHEET

1. STRUCTURAL ITEM, S.S.D.
2. MECHANICAL ITEM, S.M.D.
3. PLUMBING ITEM, S.P.D.
4. ELECTRICAL ITEM, S.E.D.
5. DARK COLORED CEMENT PLASTER — 4 / A-9.1
6. LIGHT COLORED CEMENT PLASTER
7. CEMENT PLASTER CONTROL JOINT — 4 / A-9.1

EXTERIOR ELEVATION LEGEND

- DARK COLORED CEMENT PLASTER
- LIGHT COLORED CEMENT PLASTER
- SCHEMATIC WALL (PLAN VIEW) - BEND AT WALL CORNERLINE REPRESENTED ALPHABETICALLY. EXTERIOR ELEVATIONS SHOWS WALL IN FLATTENED STATE. NOTE, SCHEMATIC WALL DRAWN AT HALF SCALE U.N.O. (A B C)
- PANEL DIRECTION
- PANEL STARTING POINT - STARTING POINT INDICATED TO CENTERLINE OF PANEL REVEAL

EXTERIOR ELEVATION GENERAL NOTES

1. NOTES AND SYMBOLS ARE TO APPLY AT ALL AREAS OF SIMILAR GRAPHIC REPRESENTATION. SUCH INDICATIONS MAY BE LIMITED TO PROMOTE CLARITY OR AVOID REDUNDANCY. NO LIMITATION OF APPLICATION SHALL BE CONSTRUED WITHOUT SPECIFIC NOTATION.
4. REFER TO MECHANICAL DRAWINGS FOR REGISTERS AND VENTS NOT OTHERWISE SHOWN.
5. REFER TO ELECTRICAL DRAWINGS FOR HORNS, SPEAKERS, PULL STATIONS AND OTHER FEATURES NOT OTHERWISE SHOWN.
6. HOST WALL NOT SHOWN.
7. ALL WALLS ARE SHOWN IN A FLATTENED PHASE.
8. MAXIMUM CEMENT PLASTER DIMENSIONS BETWEEN JOINTS SHALL BE NO GREATER THAN 12'x8'.

KEY PLAN

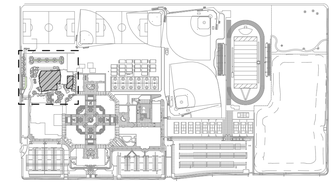

QUATTROCCHI KWOK ARCHITECTS
Main Office:
636 Fifth Street, Santa Rosa, CA 95404
Pleasanton Office:
600 Main Street, Suite E,
Pleasanton, CA 94566
(707) 576-0829

LICENSED ARCHITECT
JIM THEISS
LICENSE # C22643
EXP JUNE 30, 2021
STATE OF CALIFORNIA

SIGNED: AUGUST 13, 2019

FREEDOM HIGH SCHOOL

PERFORMING ARTS AND CTE FACILITIES

1050 NEROLY RD,
OAKLEY, CA 94561

LIBERTY UNION HIGH SCHOOL DISTRICT

ARCH PROJECT NO:	1739.00
DRAWN BY:	
DRAWING SCALE:	
PTN:	61721-0068

BID SET

AUGUST 13, 2019

SHEET TITLE

BLDG A EXTERIOR ELEVATIONS - FINISH LAYOUT

SHEET NUMBER

A-A5.3

BIM Server: BIMCLOUD-GKA - BIMcloud/1739.00 - Freedom High School/1739.00 FREEDOM HS Performing Arts Center.8/02/19.1:03 AM

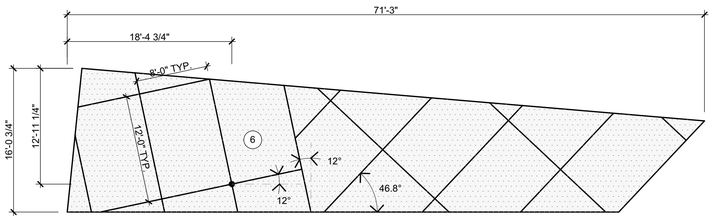

PANEL GROUP
F

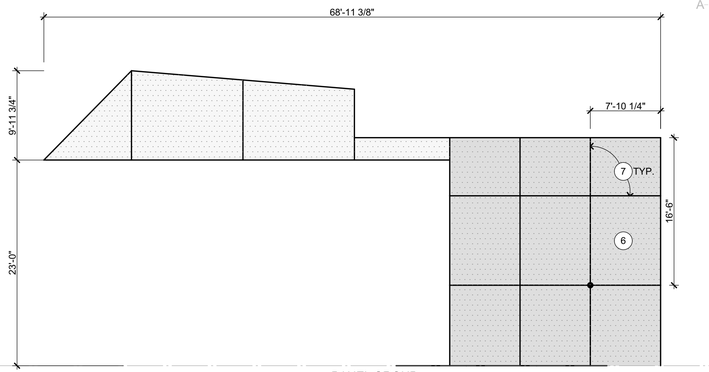

PANEL GROUP
E

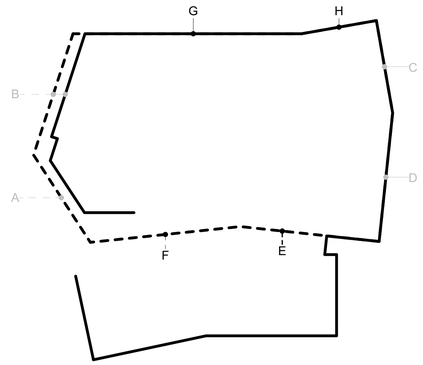

SOUTH ELEVATION FINISH LAYOUT 1

1/8" = 1'-0"

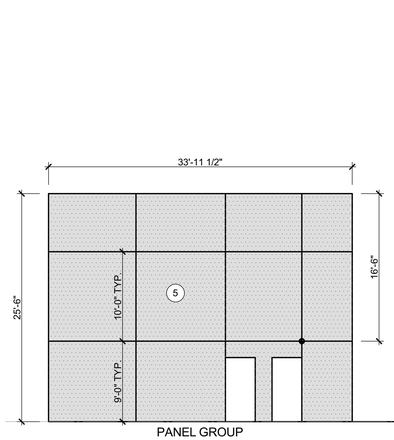

PANEL GROUP
H

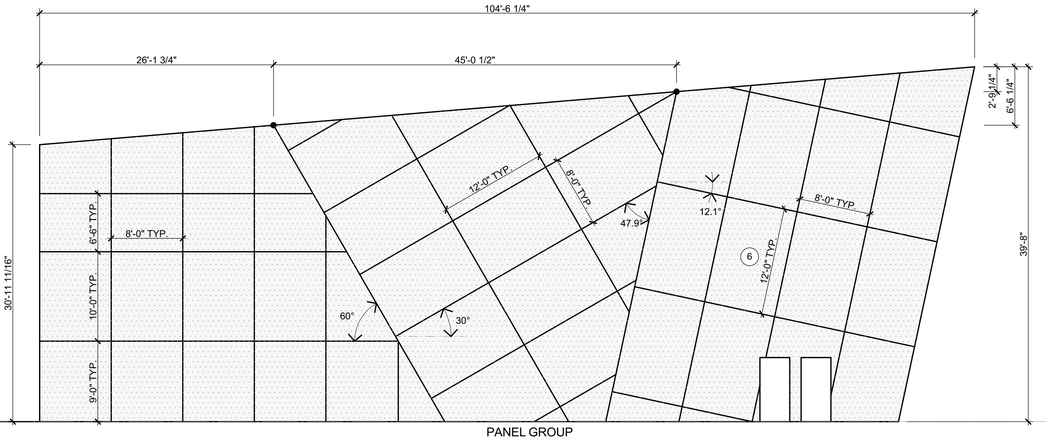

PANEL GROUP
G

NORTH ELEVATION FINISH LAYOUT 2

1/8" = 1'-0"

EXTERIOR ELEVATION KEYNOTES

NOT ALL KEYNOTES MAY APPLY TO THIS SHEET

1. STRUCTURAL ITEM, S.S.D.
2. MECHANICAL ITEM, S.M.D.
3. PLUMBING ITEM, S.P.D.
4. ELECTRICAL ITEM, S.E.D.
5. DARK COLORED CEMENT PLASTER — 4 / A-9.1
6. LIGHT COLORED CEMENT PLASTER
7. CEMENT PLASTER CONTROL JOINT — 4 / A-9.1

EXTERIOR ELEVATION LEGEND

- DARK COLORED CEMENT PLASTER
- LIGHT COLORED CEMENT PLASTER
- SCHEMATIC WALL (PLAN VIEW) - BEND AT WALL CORNERLINE REPRESENTED ALPHABETICALLY. EXTERIOR ELEVATIONS SHOWS WALL IN FLATTENED STATE. NOTE, SCHEMATIC WALL DRAWN AT HALF SCALE U.N.O. (A B C)
- PANEL DIRECTION
- PANEL STARTING POINT - STARTING POINT INDICATED TO CENTERLINE OF PANEL REVEAL

EXTERIOR ELEVATION GENERAL NOTES

1. NOTES AND SYMBOLS ARE TO APPLY AT ALL AREAS OF SIMILAR GRAPHIC REPRESENTATION. SUCH INDICATIONS MAY BE LIMITED TO PROMOTE CLARITY OR AVOID REDUNDANCY. NO LIMITATION OF APPLICATION SHALL BE CONSTRUED WITHOUT SPECIFIC NOTATION.
4. REFER TO MECHANICAL DRAWINGS FOR REGISTERS AND VENTS NOT OTHERWISE SHOWN.
5. REFER TO ELECTRICAL DRAWINGS FOR HORNS, SPEAKERS, PULL STATIONS AND OTHER FEATURES NOT OTHERWISE SHOWN.
6. HOST WALL NOT SHOWN.
7. ALL WALLS ARE SHOWN IN A FLATTENED PHASE.
8. MAXIMUM CEMENT PLASTER DIMENSIONS BETWEEN JOINTS SHALL BE NO GREATER THAN 12'x8'.

KEY PLAN

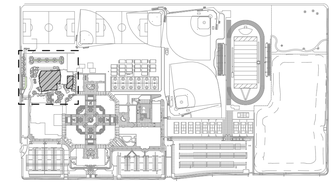

QUATTROCCHI KWOK ARCHITECTS
Main Office:
636 Fifth Street, Santa Rosa, CA 95404
Pleasanton Office:
600 Main Street, Suite E,
Pleasanton, CA 94566
(707) 576-0829

LICENSED ARCHITECT
JIM THEISS
LICENSE # C22643
EXP JUNE 30, 2021
STATE OF CALIFORNIA

SIGNED: AUGUST 13, 2019

FREEDOM HIGH SCHOOL

PERFORMING ARTS AND CTE FACILITIES

1050 NEROLY RD,
OAKLEY, CA 94561

LIBERTY UNION HIGH SCHOOL DISTRICT

ARCH PROJECT NO:	1739.00
DRAWN BY:	
DRAWING SCALE:	
PTN:	61721-0068

BID SET

AUGUST 13, 2019

SHEET TITLE

BLDG A EXTERIOR ELEVATIONS - FINISH LAYOUT

SHEET NUMBER

A-A5.4

BIM Server: BIMCLOUD-GKA - BIMcloud/1739.00 - Freedom High School/1739.00 FREEDOM HS Performing Arts Center:8/02/19 1:03 AM

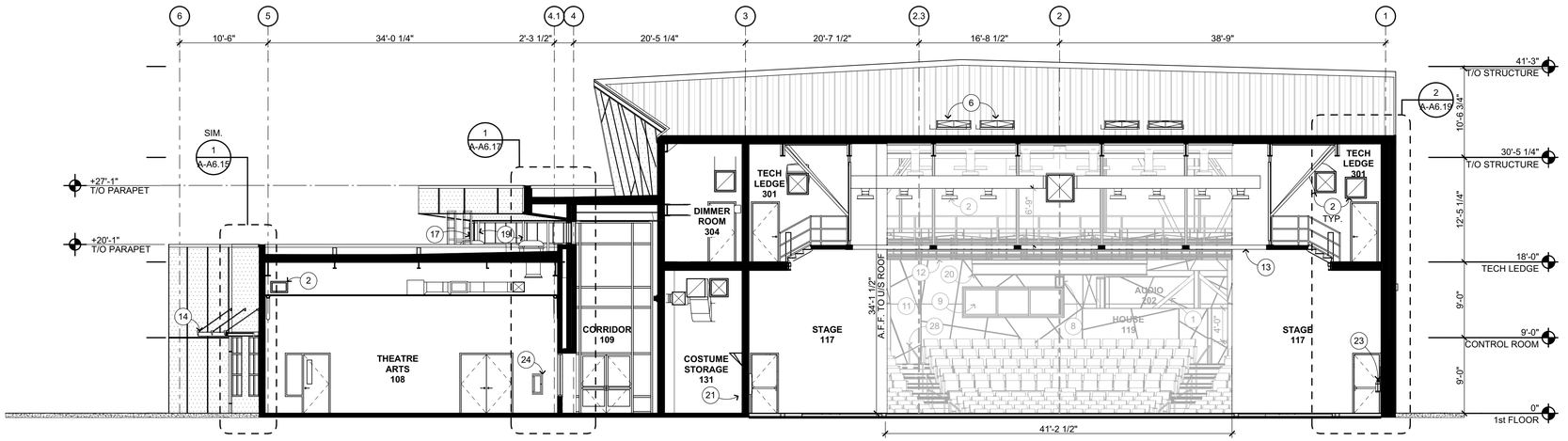

BUILDING SECTION THROUGH STAGE 1

1/8" = 1'-0"

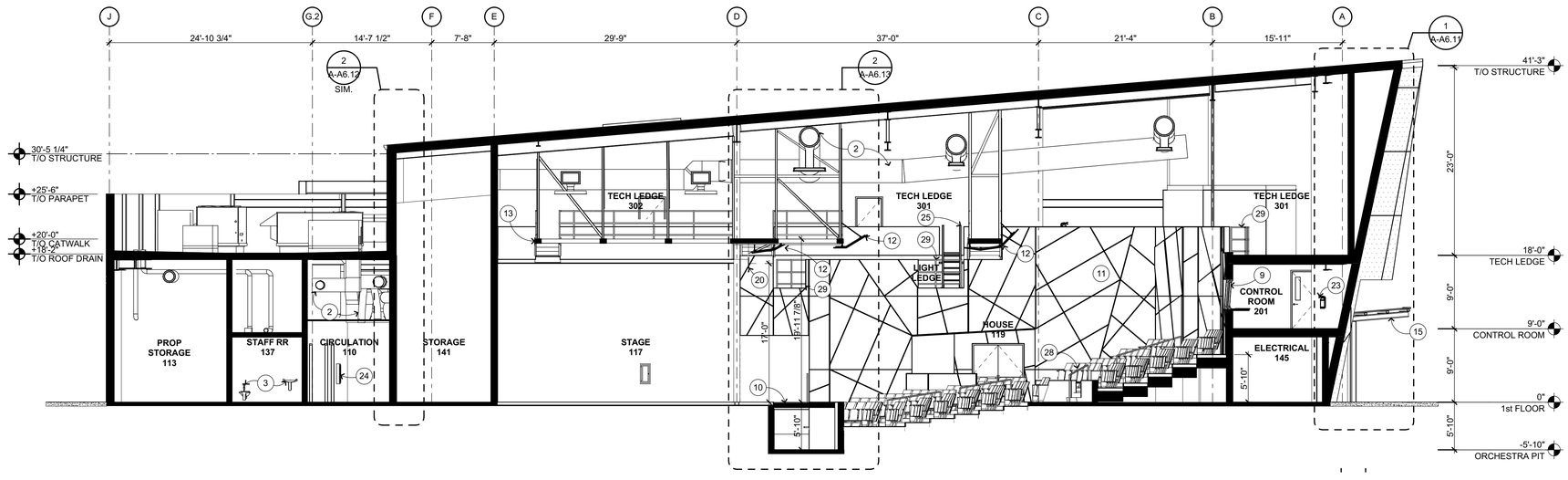

BUILDING SECTION THROUGH THEATRE HOUSE 2

1/8" = 1'-0"

SECTION KEYNOTES

NOT ALL KEYNOTES MAY APPLY TO THIS SHEET

1. STRUCTURAL ITEM, S.S.D.
2. MECHANICAL ITEM, S.M.D.
3. PLUMBING ITEM, S.P.D.
4. ELECTRICAL ITEM, S.E.D.
5. THEATRICAL ITEM, S.T.D.
6. SMOKE & HEAT VENT
7. CONCESSION WINDOW
8. PROJECTION WINDOW, SEE WINDOW SCHEDULE
9. CONTROL BOOTH WINDOW, SEE WINDOW SCHEDULE
10. ADJUSTABLE/REMOVABLE THRUST, S.T.D.
11. ACOUSTIC WALL PANEL
12. ACOUSTIC REFLECTORS
13. TENSION GRID
14. RAIN CANOPY
15. ENTRY CANOPY, S.S.D.
16. SET PREP CANOPY
17. CLERESTORY STOREFRONT SYSTEM
18. SUNSHADE
19. RAIN WATER LEADER
20. MOTORIZED PROJECTION SCREEN, S.T.D.
21. COSTUME SHELVES
22. TROPHY DISPLAY CASEWORK
23. SURFACE MOUNTED FIRE EXTINGUISHER
24. SEMI RECESSED FIRE EXTINGUISHER
25. LADDER
26. GUARDRAILS
27. REMOVABLE GUARDRAILS
28. HANDRAILS
29. LIGHTING/EQUIPMENT GUARDRAILS RAILS, S.T.D.

SECTION GENERAL NOTES

1. NOTES AND SYMBOLS ARE TO APPLY AT ALL AREAS OF SIMILAR GRAPHIC REPRESENTATION. SUCH INDICATIONS MAY BE LIMITED TO PROMOTE CLARITY OR AVOID REDUNDANCY. NO LIMITATION OF APPLICATION SHALL BE CONSTRUED WITHOUT SPECIFIC NOTATION.
2. ALL PENETRATIONS THROUGH EXTERIOR ROOF AND WALLS, AND FLOORS SHALL BE FLASHED AND SEALED WEATHER TIGHT. ALL PENETRATIONS THROUGH THE BUILDING INSULATION ENVELOPE SHALL BE PACKED WITH INSULATION.
3. PROVIDE OPENING FLASHINGS AT ALL WINDOWS, DOORS, LOUVERS AND SIMILAR WALL OPENINGS PER DETAIL
4. PROVIDE FIRESTOPPING AT CONCEALED SPACES, INCLUDING BETWEEN STAIR STRINGERS & BETWEEN STUDS WITH STAIR RUN, FURRED SPACES, CEILING/FLOOR LEVELS AND 10'-0" INTERVALS ALONG LENGTHS OF WALL, SOFFITS, DROP CEILINGS, AND COVE CEILINGS PER CBC 708.
5. REFER TO INTERIOR ELEVATIONS FOR WALL FINISHES AND INFORMATION NOT SHOWN, TYPICAL.
6. REFER TO FLOOR PLAN FOR FLOOR FINISHES, TYPICAL.
7. REFER TO REFLECTED CEILING PLAN FOR CEILING FINISHES, TYPICAL,
8. REFER TO MECHANICAL DRAWINGS FOR REGISTERS AND VENTS NOT OTHERWISE SHOWN.
9. REFER TO ELECTRICAL DRAWINGS FOR HORNS, SPEAKERS, PULL STATIONS AND OTHER FEATURES NOT OTHERWISE SHOWN.

KEY PLAN

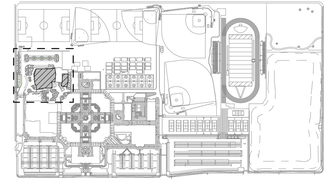

QUATTROCCHI KWOK ARCHITECTS
Main Office:
636 Fifth Street, Santa Rosa, CA 95404
Pleasanton Office:
600 Main Street, Suite E,
Pleasanton, CA 94566
(707) 576-0829

LICENSED ARCHITECT
JIM THEISS
LICENSE # C22643
EXP JUNE 30, 2021
STATE OF CALIFORNIA

SIGNED: AUGUST 13, 2019

FREEDOM HIGH SCHOOL

PERFORMING ARTS AND CTE FACILITIES

1050 NEROLY RD,
OAKLEY, CA 94561

LIBERTY UNION HIGH SCHOOL DISTRICT

ARCH PROJECT NO:	1739.00
DRAWN BY:	
DRAWING SCALE:	
PTN:	61721-0068

BID SET

AUGUST 13, 2019

SHEET TITLE

BLDG A BUILDING SECTIONS

SHEET NUMBER

A-A6.1

BIM Server: BIMCLOUD-QKA - BIMcloud/1739.00 - Freedom High School/1739.00 FREEDOM HS Performing Arts Center:8/02/19 1:03 AM

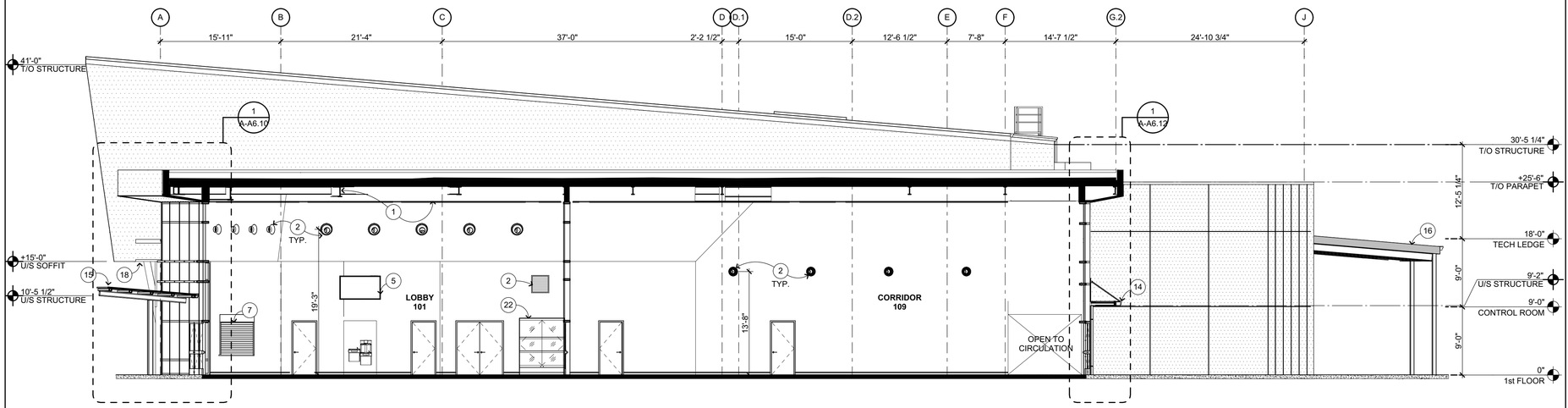

BUILDING SECTION THROUGH LOBBY

1/8" = 1'-0"

1

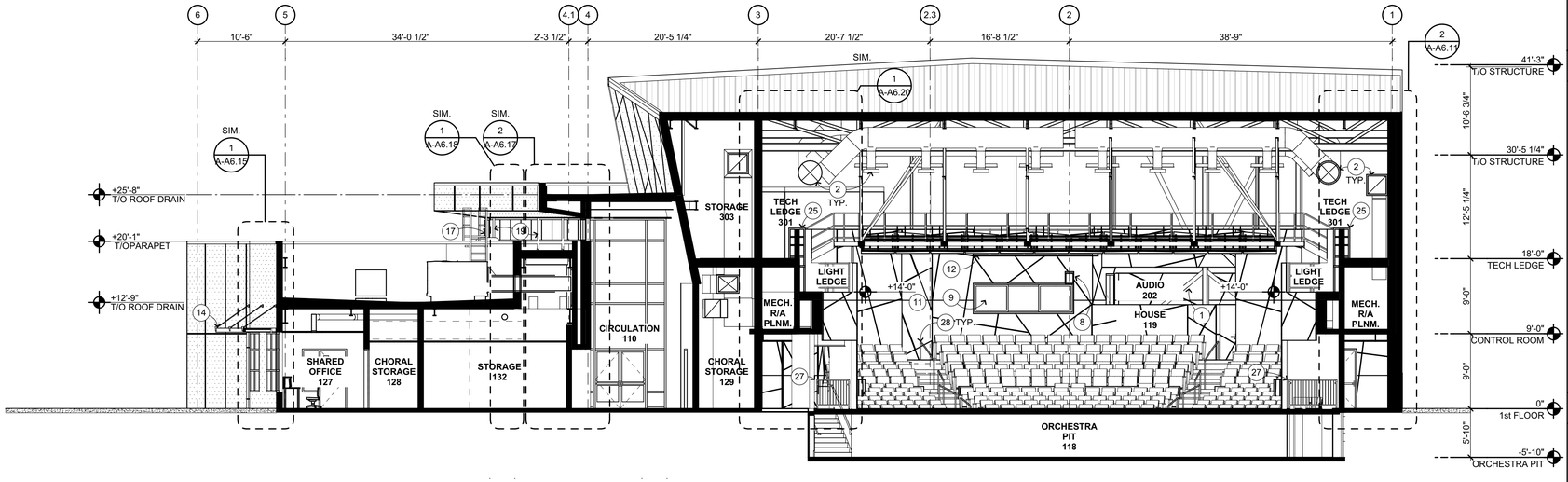

BUILDING SECTION THROUGH ORCHESTRA PIT

1/8" = 1'-0"

2

SECTION KEYNOTES

NOT ALL KEYNOTES MAY APPLY TO THIS SHEET

1. STRUCTURAL ITEM, S.S.D.
2. MECHANICAL ITEM, S.M.D.
3. PLUMBING ITEM, S.P.D.
4. ELECTRICAL ITEM, S.E.D.
5. THEATRICAL ITEM, S.T.D.
6. SMOKE & HEAT VENT
7. CONCESSION WINDOW
8. PROJECTION WINDOW, SEE WINDOW SCHEDULE
9. CONTROL BOOTH WINDOW, SEE WINDOW SCHEDULE
10. ADJUSTABLE/REMOVABLE THRUST, S.T.D.
11. ACOUSTIC WALL PANEL
12. ACOUSTIC REFLECTORS
13. TENSION GRID
14. RAIN CANOPY
15. ENTRY CANOPY, S.S.D.
16. SET PREP CANOPY
17. CLERESTORY STOREFRONT SYSTEM
18. SUNSHADE
19. RAIN WATER LEADER
20. MOTORIZED PROJECTION SCREEN, S.T.D.
21. COSTUME SHELVES
22. TROPHY DISPLAY CASEWORK
23. SURFACE MOUNTED FIRE EXTINGUISHER
24. SEMI RECESSED FIRE EXTINGUISHER
25. LADDER
26. GUARDRAILS
27. REMOVABLE GUARDRAILS
28. HANDRAILS
29. LIGHTING/EQUIPMENT GUARDRAILS RAILS, S.T.D.

SECTION GENERAL NOTES

1. NOTES AND SYMBOLS ARE TO APPLY AT ALL AREAS OF SIMILAR GRAPHIC REPRESENTATION. SUCH INDICATIONS MAY BE LIMITED TO PROMOTE CLARITY OR AVOID REDUNDANCY. NO LIMITATION OF APPLICATION SHALL BE CONSTRUED WITHOUT SPECIFIC NOTATION.
2. ALL PENETRATIONS THROUGH EXTERIOR ROOF AND WALLS, AND FLOORS SHALL BE FLASHED AND SEALED WEATHER TIGHT. ALL PENETRATIONS THROUGH THE BUILDING INSULATION ENVELOPE SHALL BE PACKED WITH INSULATION.
3. PROVIDE OPENING FLASHINGS AT ALL WINDOWS, DOORS, LOUVERS AND SIMILAR WALL OPENINGS PER DETAIL
4. PROVIDE FIRESTOPPING AT CONCEALED SPACES, INCLUDING BETWEEN STAIR STRINGERS & BETWEEN STUDS WITH STAIR RUN, FURRED SPACES, CEILING/FLOOR LEVELS AND 10'-0" INTERVALS ALONG LENGTHS OF WALL, SOFFITS, DROP CEILINGS, AND COVE CEILINGS PER CBC 708.
5. REFER TO INTERIOR ELEVATIONS FOR WALL FINISHES AND INFORMATION NOT SHOWN, TYPICAL.
6. REFER TO FLOOR PLAN FOR FLOOR FINISHES, TYPICAL.
7. REFER TO REFLECTED CEILING PLAN FOR CEILING FINISHES, TYPICAL,
8. REFER TO MECHANICAL DRAWINGS FOR REGISTERS AND VENTS NOT OTHERWISE SHOWN.
9. REFER TO ELECTRICAL DRAWINGS FOR HORNS, SPEAKERS, PULL STATIONS AND OTHER FEATURES NOT OTHERWISE SHOWN.

KEY PLAN

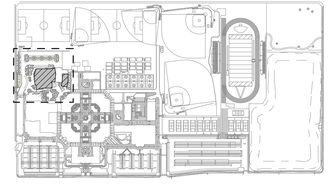

QUATTROCCHI KWOK ARCHITECTS
Main Office:
636 Fifth Street, Santa Rosa, CA 95404
Pleasanton Office:
600 Main Street, Suite E,
Pleasanton, CA 94566
(707) 576-0829

LICENSED ARCHITECT
JIM THEISS
LICENSE # C22643
EXP JUNE 30, 2021
STATE OF CALIFORNIA

SIGNED: AUGUST 13, 2019

FREEDOM HIGH SCHOOL

PERFORMING ARTS AND CTE FACILITIES

1050 NEROLY RD,
OAKLEY, CA 94561

LIBERTY UNION HIGH SCHOOL DISTRICT

ARCH PROJECT NO:	1739.00
DRAWN BY:	
DRAWING SCALE:	
PTN:	61721-0068

BID SET

AUGUST 13, 2019

SHEET TITLE

BLDG A BUILDING SECTIONS

SHEET NUMBER

A-A6.2

BIM Server: BIMCLOUD-QKA - BIMcloud/1739.00 - Freedom High School/1739.00 FREEDOM HS Performing Arts Center:8/02/19,1:04 AM

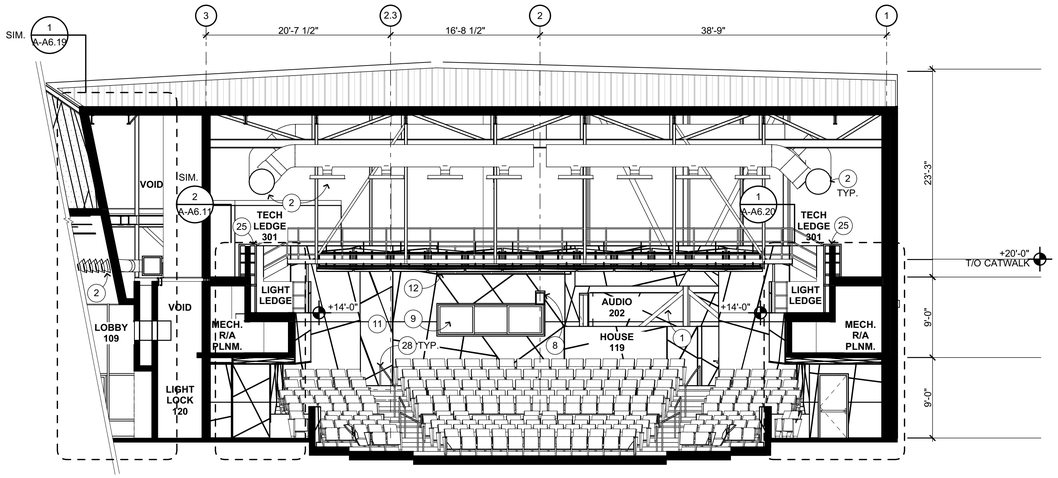

BUILDING SECTION THROUGH LIGHT LEDGE 1

1/8" = 1'-0"

SECTION KEYNOTES

NOT ALL KEYNOTES MAY APPLY TO THIS SHEET

1. STRUCTURAL ITEM, S.S.D.
2. MECHANICAL ITEM, S.M.D.
3. PLUMBING ITEM, S.P.D.
4. ELECTRICAL ITEM, S.E.D.
5. THEATRICAL ITEM, S.T.D.
6. SMOKE & HEAT VENT
7. CONCESSION WINDOW
8. PROJECTION WINDOW, SEE WINDOW SCHEDULE
9. CONTROL BOOTH WINDOW, SEE WINDOW SCHEDULE
10. ADJUSTABLE/REMOVABLE THRUST, S.T.D.
11. ACOUSTIC WALL PANEL
12. ACOUSTIC REFLECTORS
13. TENSION GRID
14. RAIN CANOPY
15. ENTRY CANOPY, S.S.D.
16. SET PREP CANOPY
17. CLERESTORY STOREFRONT SYSTEM
18. SUNSHADE
19. RAIN WATER LEADER
20. MOTORIZED PROJECTION SCREEN, S.T.D.
21. COSTUME SHELVES
22. TROPHY DISPLAY CASEWORK
23. SURFACE MOUNTED FIRE EXTINGUISHER
24. SEMI RECESSED FIRE EXTINGUISHER
25. LADDER
26. GUARDRAILS
27. REMOVABLE GUARDRAILS
28. HANDRAILS
29. LIGHTING/EQUIPMENT GUARDRAILS RAILS, S.T.D.

SECTION GENERAL NOTES

1. NOTES AND SYMBOLS ARE TO APPLY AT ALL AREAS OF SIMILAR GRAPHIC REPRESENTATION. SUCH INDICATIONS MAY BE LIMITED TO PROMOTE CLARITY OR AVOID REDUNDANCY. NO LIMITATION OF APPLICATION SHALL BE CONSTRUED WITHOUT SPECIFIC NOTATION.
2. ALL PENETRATIONS THROUGH EXTERIOR ROOF AND WALLS, AND FLOORS SHALL BE FLASHED AND SEALED WEATHER TIGHT. ALL PENETRATIONS THROUGH THE BUILDING INSULATION ENVELOPE SHALL BE PACKED WITH INSULATION.
3. PROVIDE OPENING FLASHINGS AT ALL WINDOWS, DOORS, LOUVERS AND SIMILAR WALL OPENINGS PER DETAIL
4. PROVIDE FIRESTOPPING AT CONCEALED SPACES, INCLUDING BETWEEN STAIR STRINGERS & BETWEEN STUDS WITH STAIR RUN, FURRED SPACES, CEILING/FLOOR LEVELS AND 10'-0" INTERVALS ALONG LENGTHS OF WALL, SOFFITS, DROP CEILINGS, AND COVE CEILINGS PER CBC 708.
5. REFER TO INTERIOR ELEVATIONS FOR WALL FINISHES AND INFORMATION NOT SHOWN, TYPICAL.
6. REFER TO FLOOR PLAN FOR FLOOR FINISHES, TYPICAL.
7. REFER TO REFLECTED CEILING PLAN FOR CEILING FINISHES, TYPICAL,
8. REFER TO MECHANICAL DRAWINGS FOR REGISTERS AND VENTS NOT OTHERWISE SHOWN.
9. REFER TO ELECTRICAL DRAWINGS FOR HORNS, SPEAKERS, PULL STATIONS AND OTHER FEATURES NOT OTHERWISE SHOWN.

KEY PLAN

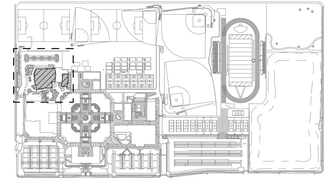

QUATTROCCHI KWOK ARCHITECTS
Main Office:
636 Fifth Street, Santa Rosa, CA 95404
Pleasanton Office:
600 Main Street, Suite E,
Pleasanton, CA 94566
(707) 576-0829

LICENSED ARCHITECT
JIM THEISS
LICENSE # C22643
EXP JUNE 30, 2021
STATE OF CALIFORNIA

SIGNED: AUGUST 13, 2019

FREEDOM HIGH SCHOOL

PERFORMING ARTS AND CTE FACILITIES

1050 NEROLY RD,
OAKLEY, CA 94561

LIBERTY UNION HIGH SCHOOL DISTRICT

ARCH PROJECT NO: 1739.00
DRAWN BY:
DRAWING SCALE:
PTN: 61721-0068

BID SET

AUGUST 13, 2019

SHEET TITLE

BLDG A BUILDING SECTIONS

SHEET NUMBER

A-A6.3

BIM Server: BIMCLOUD-QKA - BIMcloud/1739.00 - Freedom High School/1739.00 FREEDOM HS Performing Arts Center:8/02/19 1:04 AM

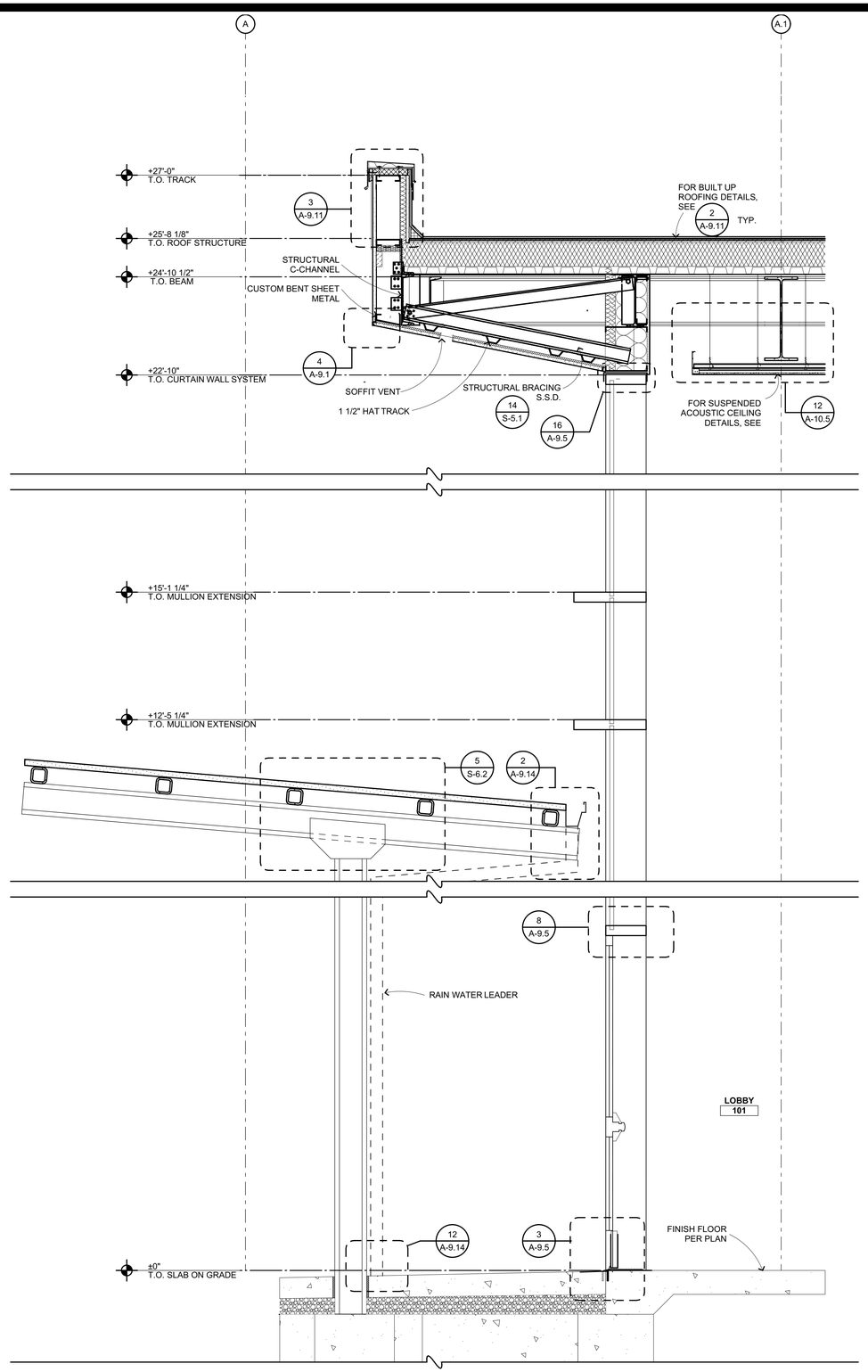

LOBBY EXTERIOR CURTAIN WALL @ DOOR 1

3/4" = 1'-0"

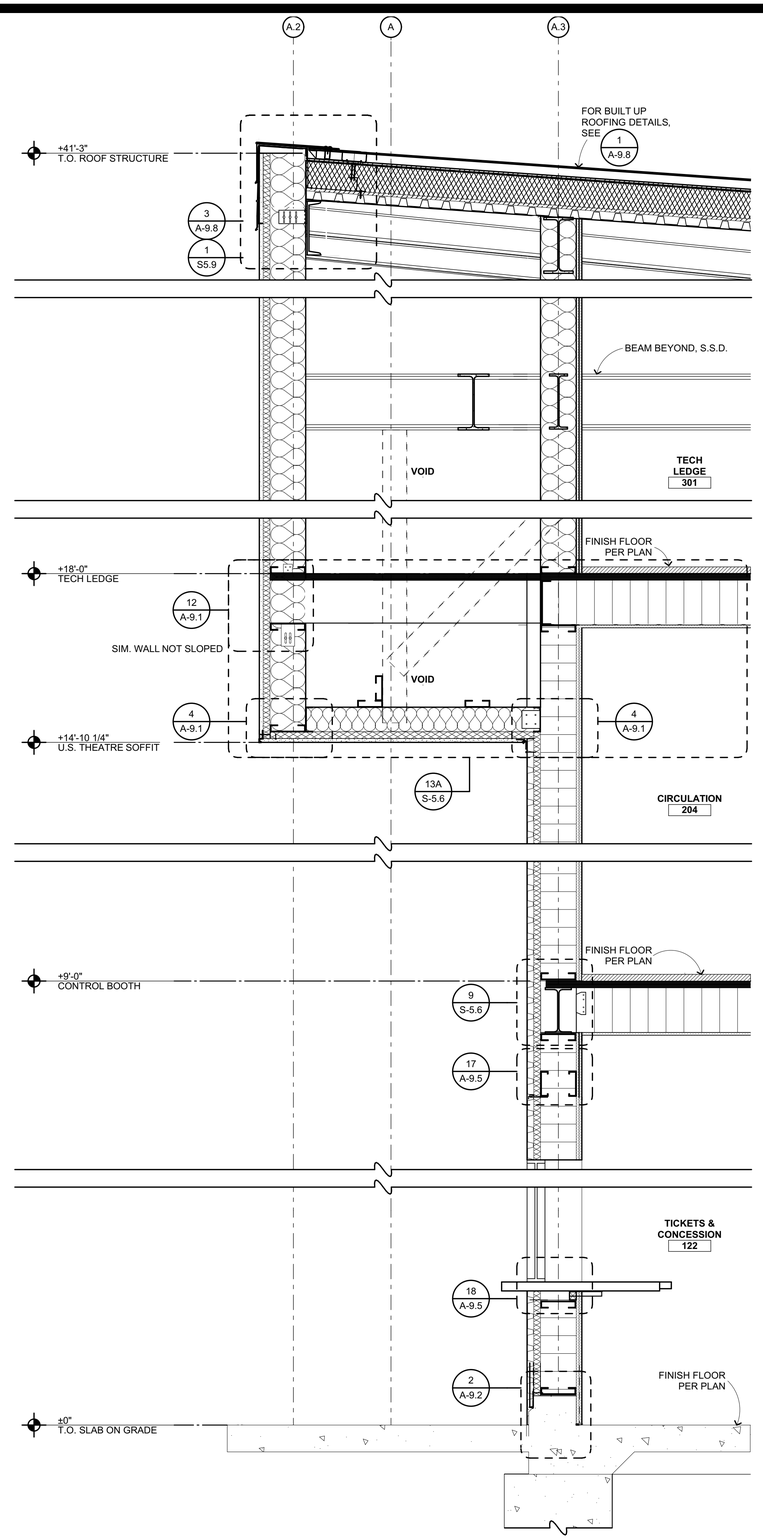

HOUSE EXTERIOR WALL @ WEST 2

3/4" = 1'-0"

QUATTROCCHI KWOK
ARCHITECTS

Main Office:
636 Fifth Street, Santa Rosa, CA 95404
Pleasanton Office:
600 Main Street, Suite E,
Pleasanton, CA 94566
(707) 576-0829

LICENSED ARCHITECT
JIM THEISS
LICENSE # C22643
EXP JUNE 30, 2021
STATE OF CALIFORNIA

SIGNED: AUGUST 13, 2019

FREEDOM HIGH SCHOOL

PERFORMING ARTS AND CTE FACILITIES

1050 NEROLY RD,
OAKLEY, CA 94561

LIBERTY UNION HIGH SCHOOL DISTRICT

ARCH PROJECT NO:	1739.00
DRAWN BY:	
DRAWING SCALE:	
PTN:	61721-0068

BID SET

AUGUST 13, 2019

SHEET TITLE

BLDG A WALL SECTIONS

SHEET NUMBER

A-A6.10

BIM Server: BIMCLOUD-QKA - BIMcloud/1739.00 - Freedom High School/1739.00 FREEDOM HS Performing Arts Center.8/02/19 1:05 AM

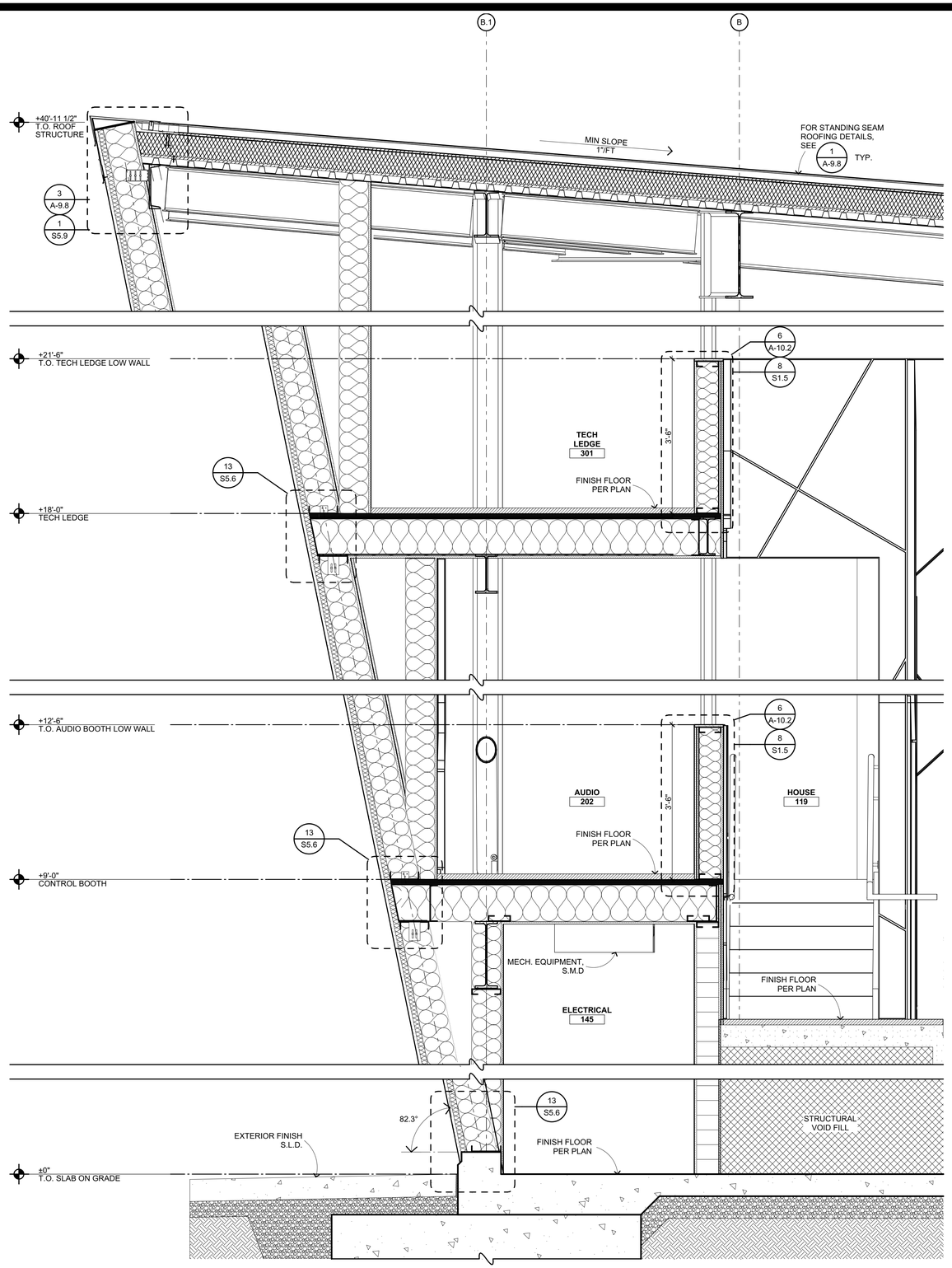

EXTERIOR HOUSE WALL @ WEST 1

3/4" = 1'-0"

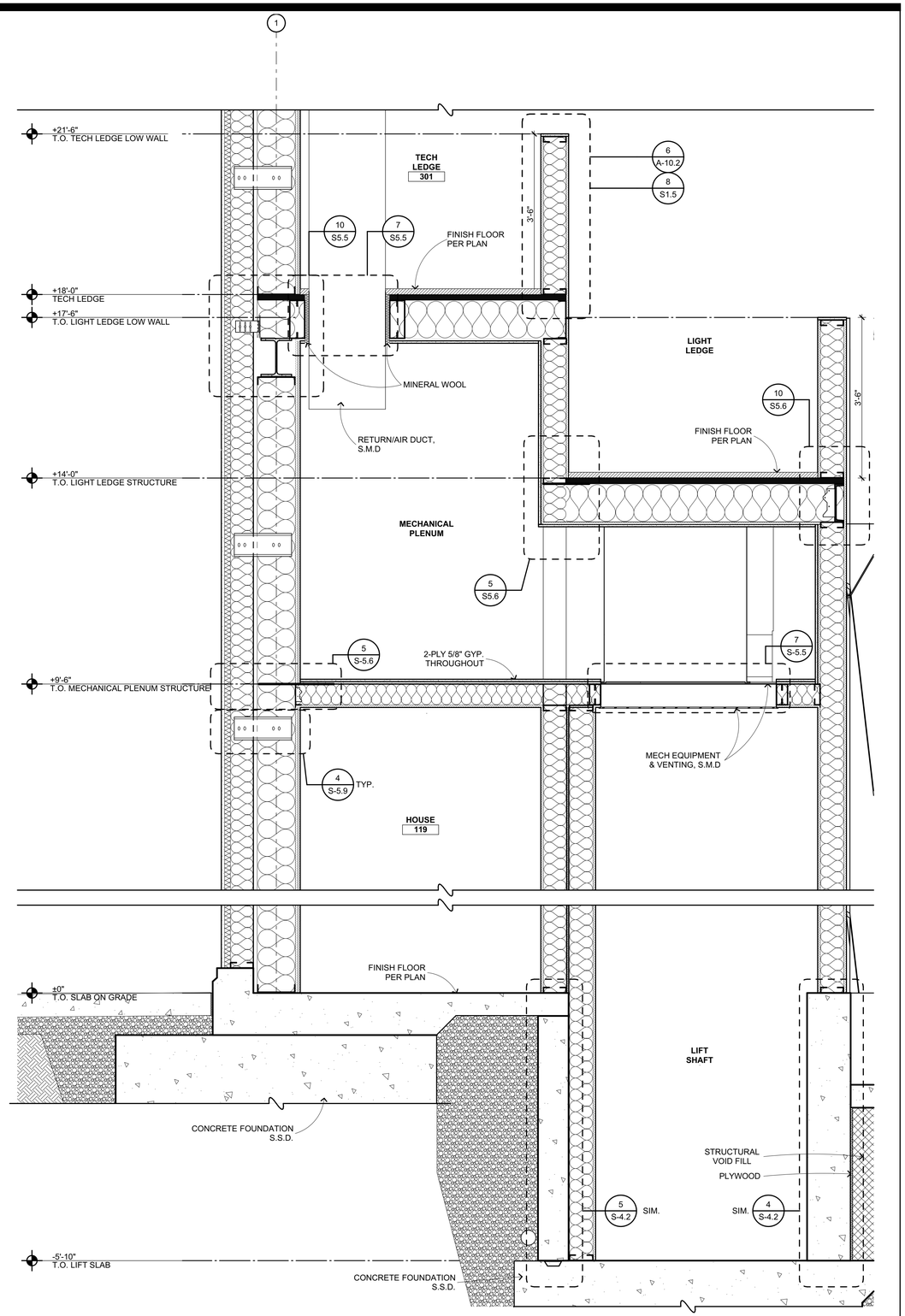

EXTERIOR HOUSE WALL @ NORTH 2

3/4" = 1'-0"

QUATTROCCHI KWOK ARCHITECTS

Main Office:
636 Fifth Street, Santa Rosa, CA 95404
Pleasanton Office:
600 Main Street, Suite E,
Pleasanton, CA 94566
(707) 576-0829

LICENSED ARCHITECT
JIM THEISS
LICENSE # C22643
EXP JUNE 30, 2021
STATE OF CALIFORNIA

SIGNED: AUGUST 13, 2019

FREEDOM HIGH SCHOOL

PERFORMING ARTS AND CTE FACILITIES

1050 NEROLY RD,
OAKLEY, CA 94561

LIBERTY UNION HIGH SCHOOL DISTRICT

ARCH PROJECT NO:	1739.00
DRAWN BY:	
DRAWING SCALE:	
PTN:	61721-0068

BID SET

AUGUST 13, 2019

SHEET TITLE

BLDG A WALL SECTIONS

SHEET NUMBER

A-A6.11

BIM Server: BIMCLOUD-QKA - BIMcloud/1739.00 - Freedom High School/1739.00 FREEDOM HS Performing Arts Center:8/02/19 1:05 AM

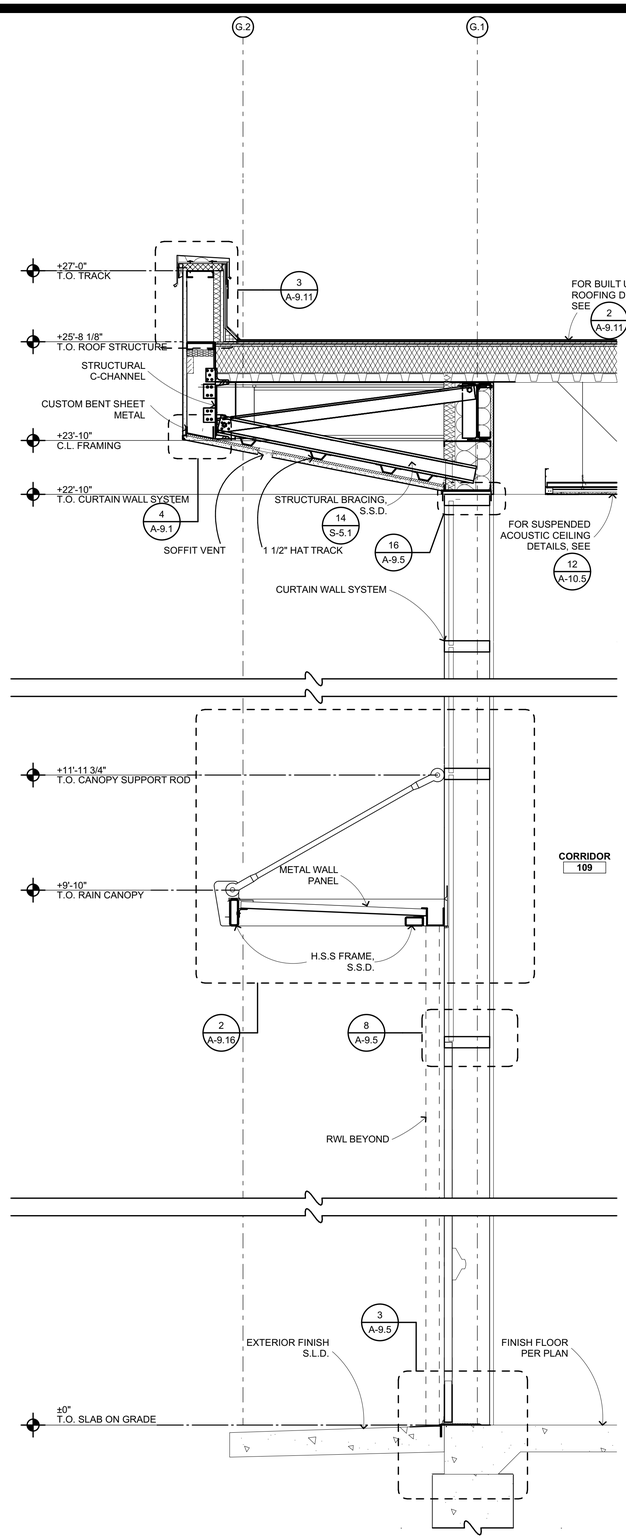

CORRIDOR 109 EXTERIOR CURTAIN WALL

3/4" = 1'-0" (1)

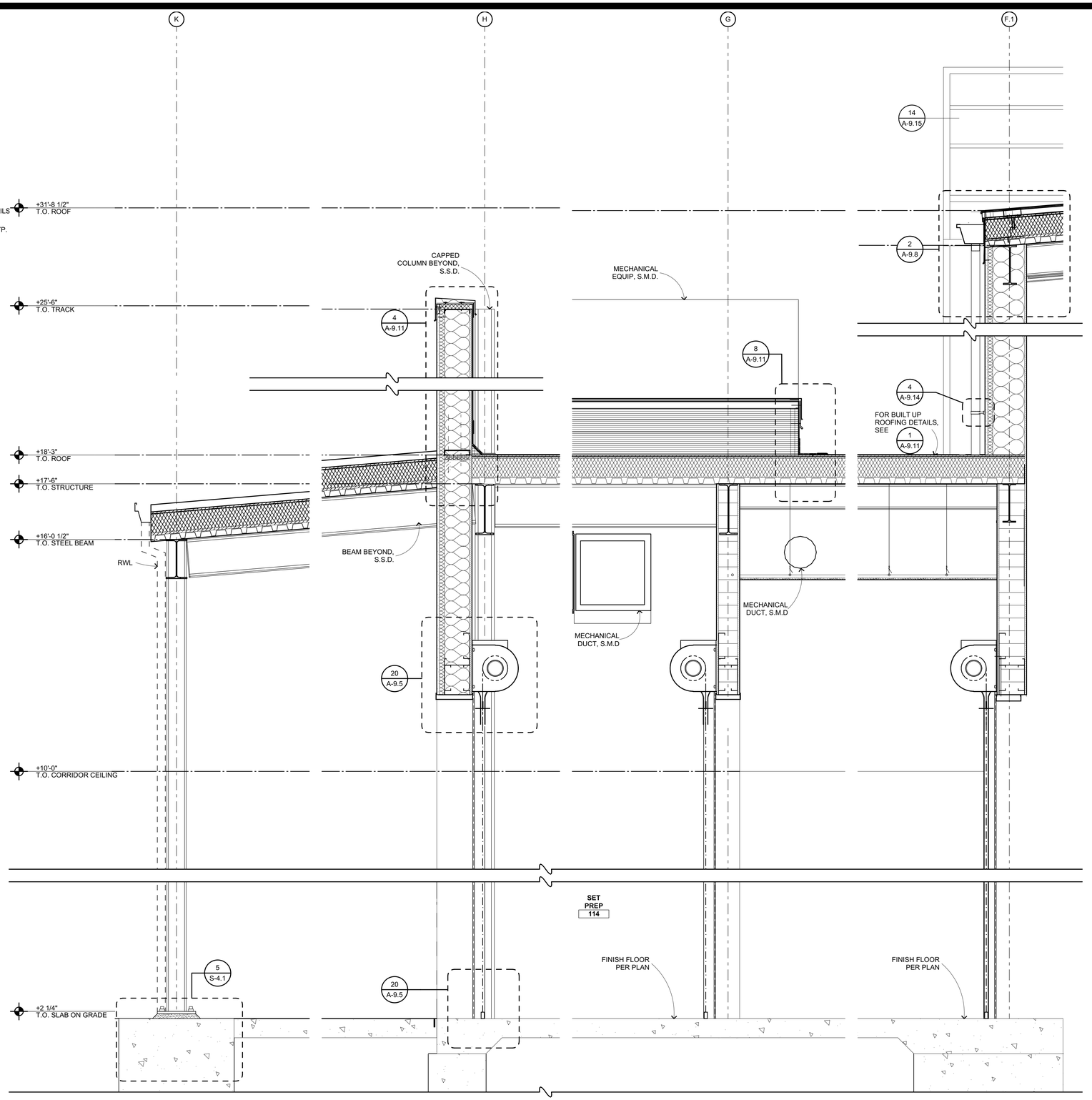

SET PREP EXTERIOR WALL & CANOPY

3/4" = 1'-0" (2)

QUATTROCCHI KWOK
ARCHITECTS

Main Office:
636 Fifth Street, Santa Rosa, CA 95404
Pleasanton Office:
600 Main Street, Suite E,
Pleasanton, CA 94566
(707) 576-0829

LICENSED ARCHITECT
JIM THEISS
LICENSE # C22643
EXP JUNE 30, 2021
STATE OF CALIFORNIA

SIGNED: AUGUST 13, 2019

FREEDOM HIGH SCHOOL

PERFORMING ARTS AND CTE FACILITIES

1050 NEROLY RD,
OAKLEY, CA 94561

LIBERTY UNION HIGH SCHOOL DISTRICT

ARCH PROJECT NO:	1739.00
DRAWN BY:	
DRAWING SCALE:	
PTN:	61721-0068

BID SET

AUGUST 13, 2019

SHEET TITLE

BLDG A WALL SECTIONS

SHEET NUMBER

A-A6.12

BIM Server: BIMCLOUD-QKA - BIMcloud/1739.00 - Freedom High School/1739.00 FREEDOM HS Performing Arts Center.8/02/19 1:05 AM

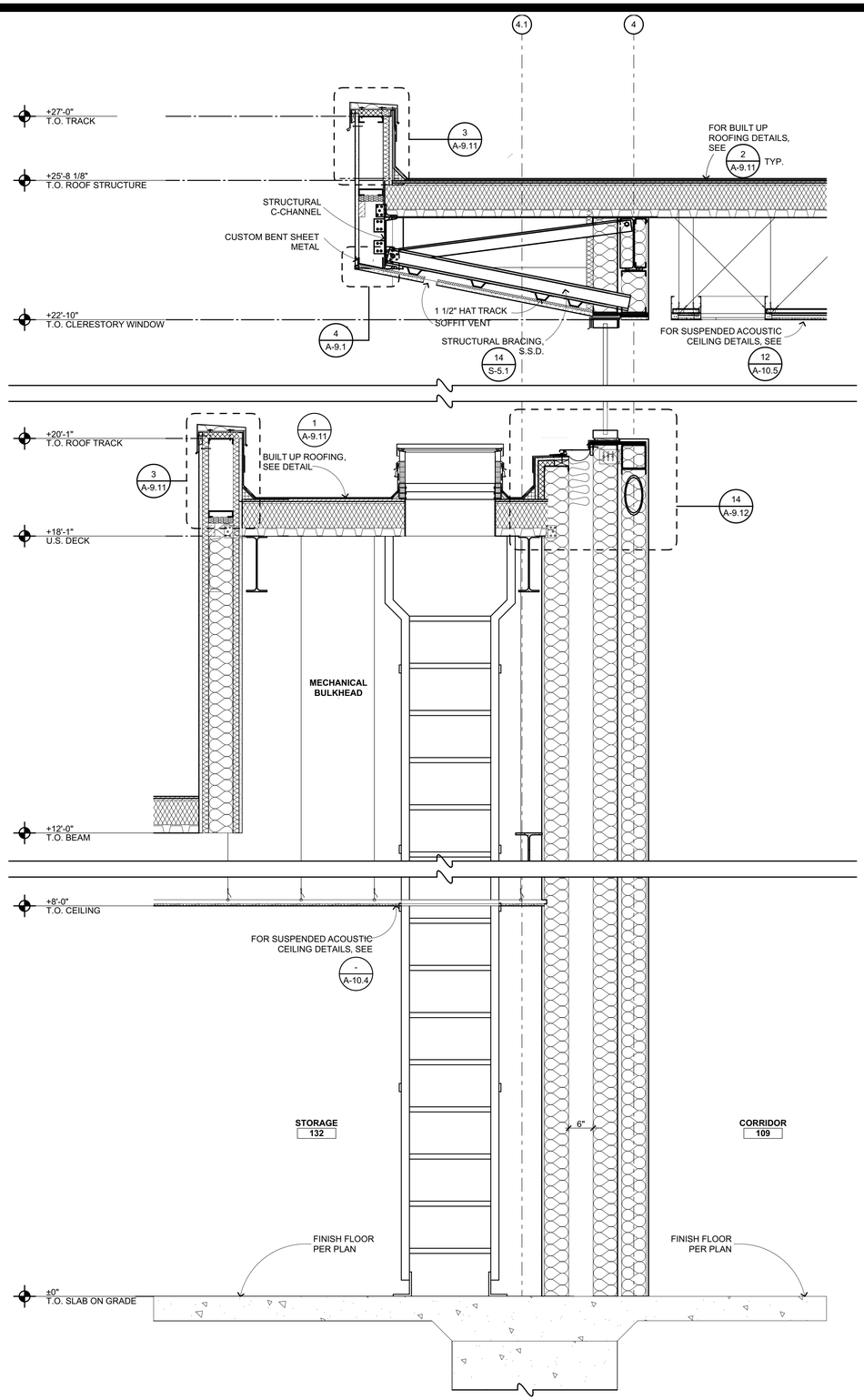

LOBBY/CHORAL ROOM WALL 1

3/4" = 1'-0"

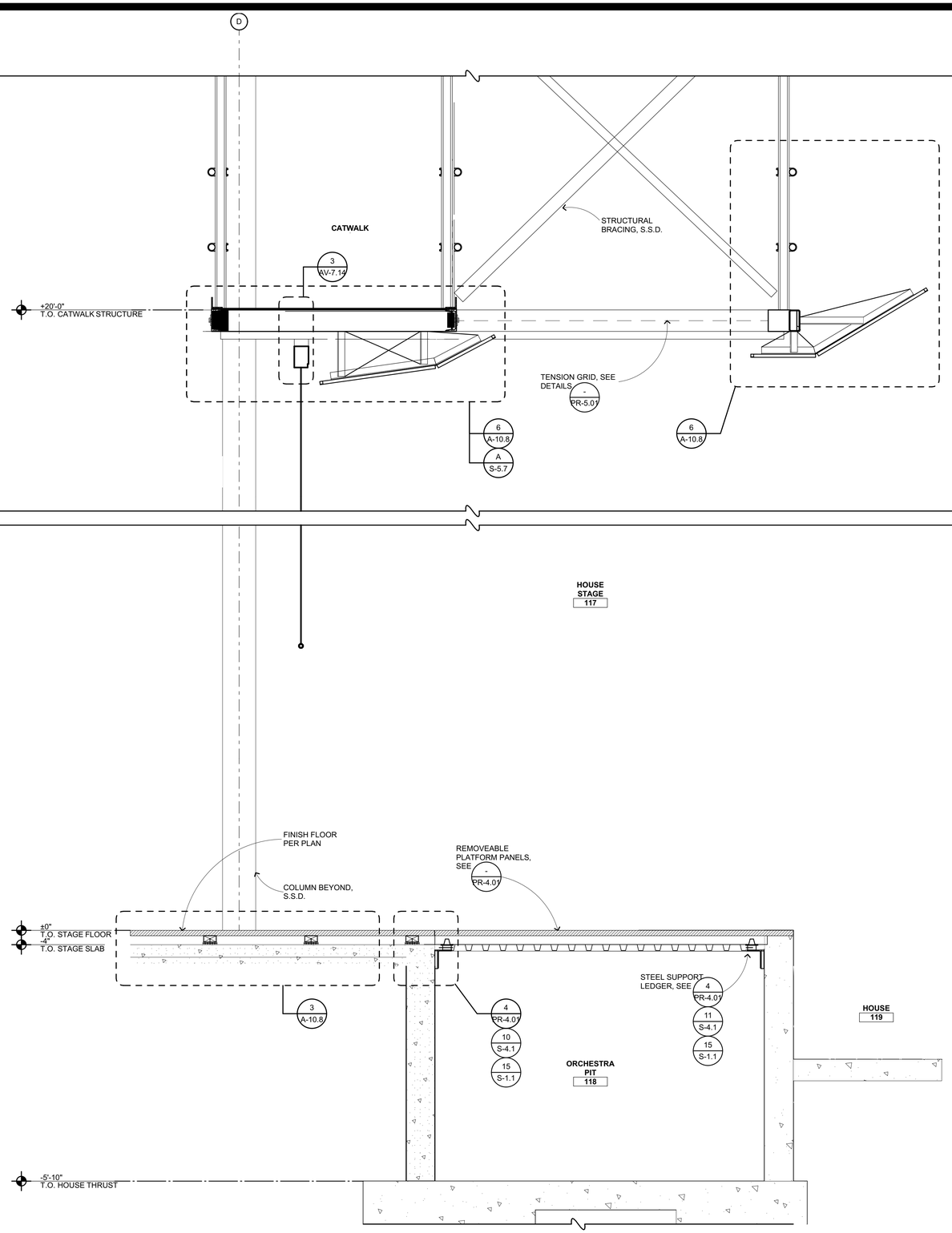

STAGE WALL SECTION 2

3/4" = 1'-0"

QUATTROCCHI KWOK ARCHITECTS
Main Office:
636 Fifth Street, Santa Rosa, CA 95404
Pleasanton Office:
600 Main Street, Suite E,
Pleasanton, CA 94566
(707) 576-0829

LICENSED ARCHITECT
JIM THEISS
LICENSE # C22643
EXP JUNE 30, 2021
STATE OF CALIFORNIA

SIGNED: AUGUST 13, 2019

FREEDOM HIGH SCHOOL

PERFORMING ARTS AND CTE FACILITIES

1050 NEROLY RD,
OAKLEY, CA 94561

LIBERTY UNION HIGH SCHOOL DISTRICT

ARCH PROJECT NO:	1739.00
DRAWN BY:	
DRAWING SCALE:	
PTN:	61721-0068

BID SET

AUGUST 13, 2019

SHEET TITLE

BLDG A WALL SECTIONS

SHEET NUMBER

A-A6.13

BIM Server: BIMCLOUD-QKA - BIMcloud/1739.00 - Freedom High School/1739.00 FREEDOM HS Performing Arts Center:8/02/19 1:05 AM

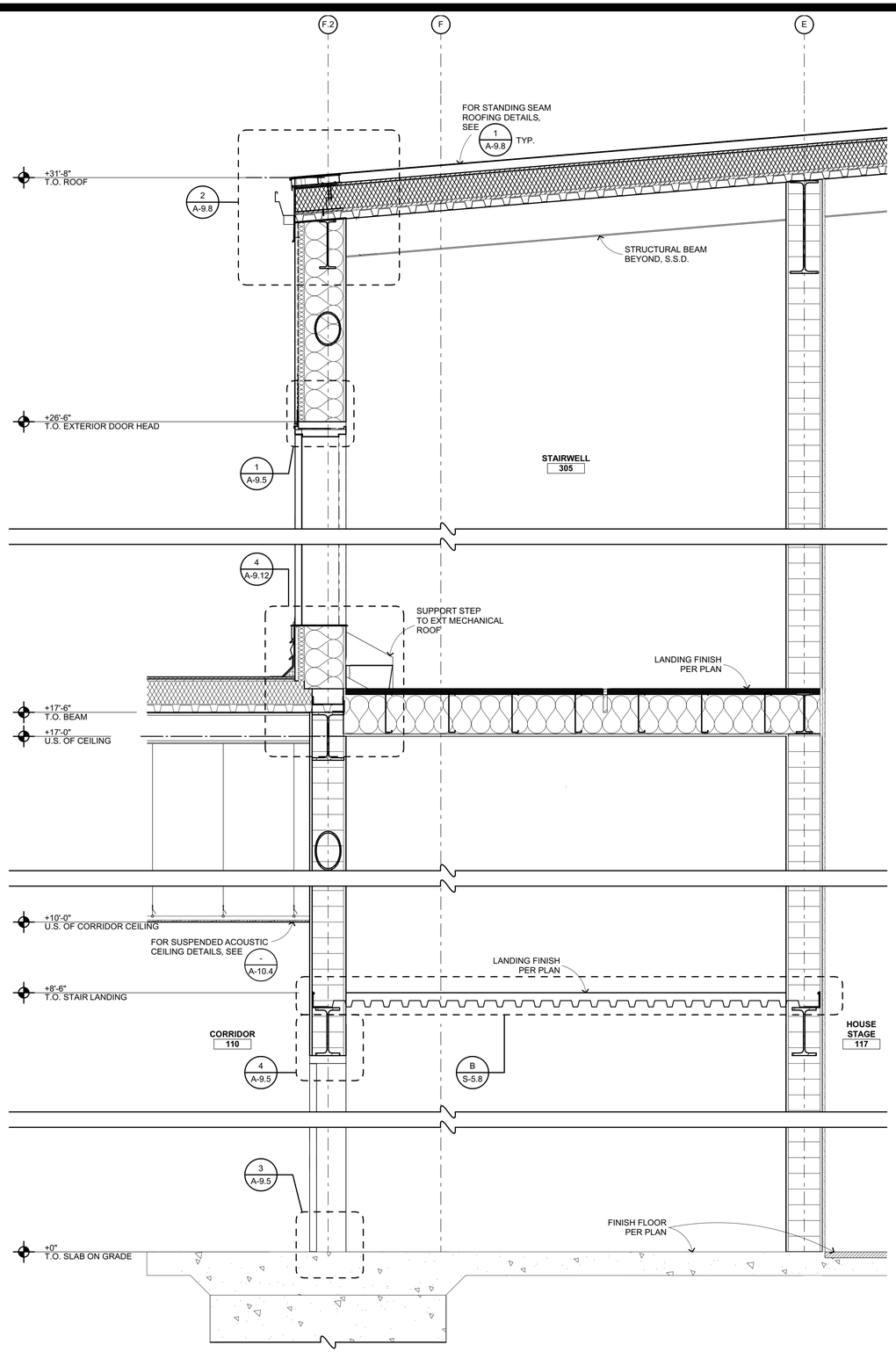

LIGHT LOCK/CIRCULATION WALL 1

3/4" = 1'-0"

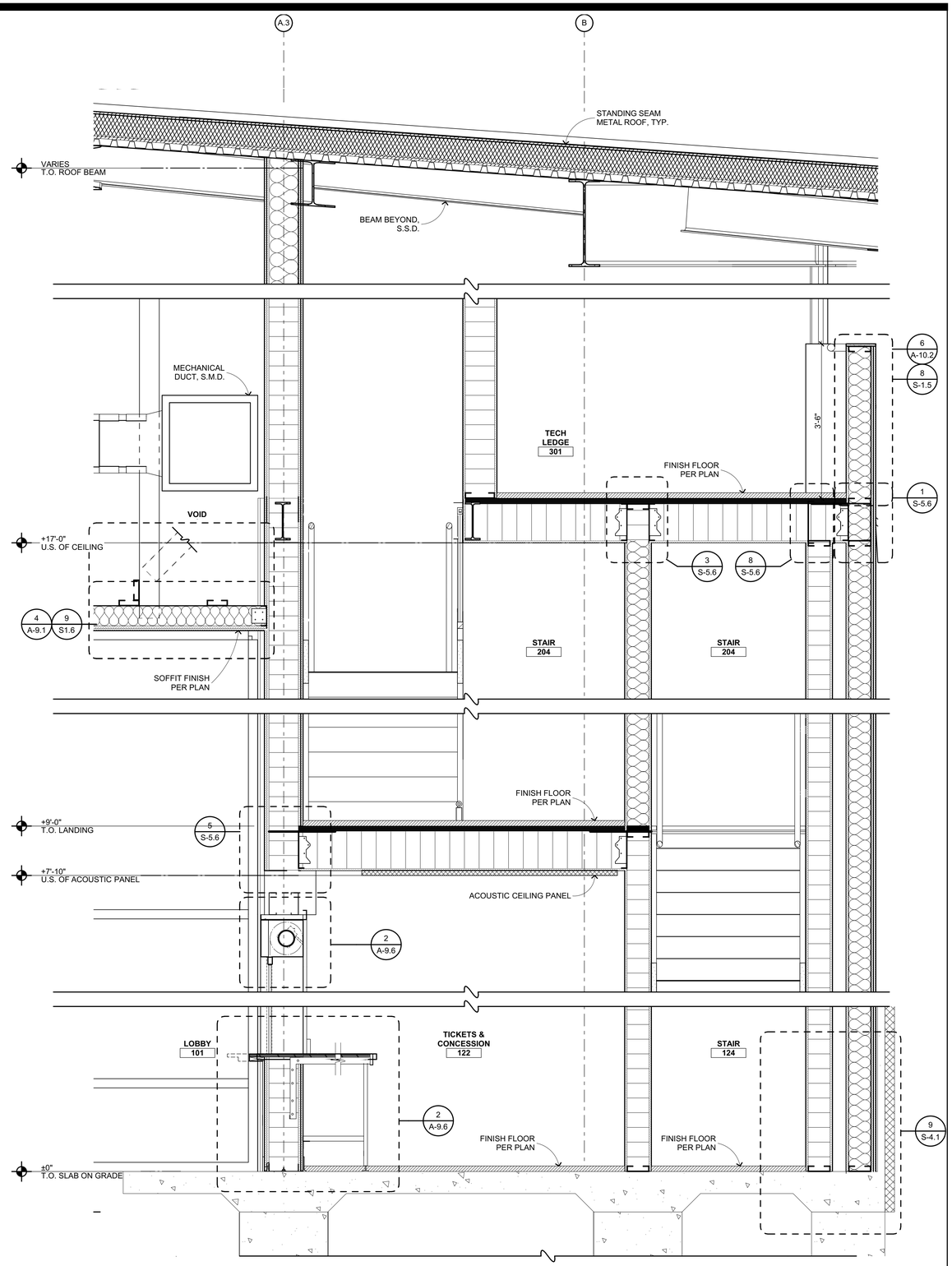

CONCESSION/LOBBY WALL 2

3/4" = 1'-0"

QUATTROCCHI KWOK ARCHITECTS
Main Office:
636 Fifth Street, Santa Rosa, CA 95404
Pleasanton Office:
600 Main Street, Suite E,
Pleasanton, CA 94566
(707) 576-0829

LICENSED ARCHITECT
JIM THEISS
LICENSE # C22643
EXP JUNE 30, 2021
STATE OF CALIFORNIA

SIGNED: AUGUST 13, 2019

FREEDOM HIGH SCHOOL

PERFORMING ARTS AND CTE FACILITIES

1050 NEROLY RD,
OAKLEY, CA 94561

LIBERTY UNION HIGH SCHOOL DISTRICT

ARCH PROJECT NO:	1739.00
DRAWN BY:	
DRAWING SCALE:	
PTN:	61721-0068

BID SET

AUGUST 13, 2019

SHEET TITLE

BLDG A WALL SECTIONS

SHEET NUMBER

A-A6.14

BIM Server: BIMCLOUD-QKA - BIMcloud/1739.00 - Freedom High School/1739.00 FREEDOM HS Performing Arts Center;8/02/19 1:05 AM

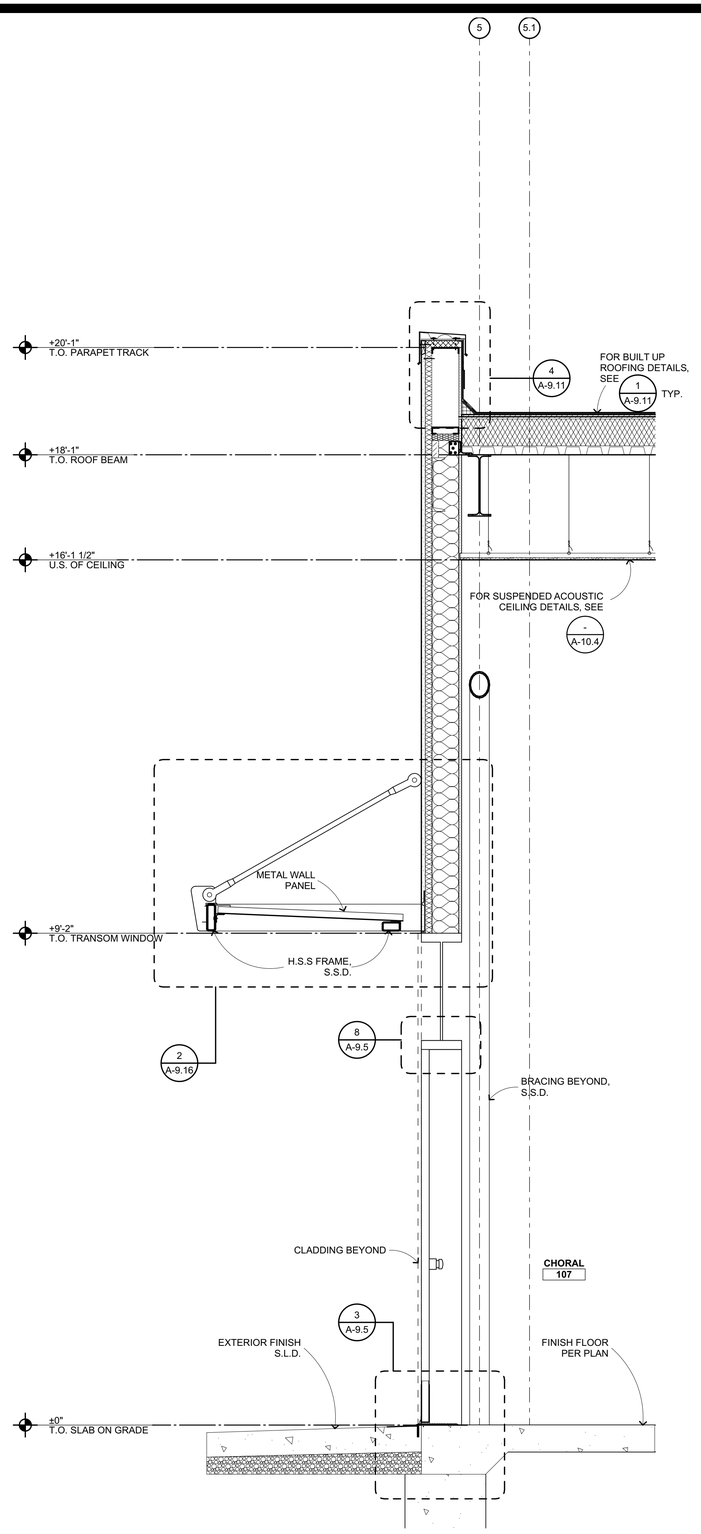

CHORAL ROOM EXTERIOR WALL @ DOOR 1

3/4" = 1'-0"

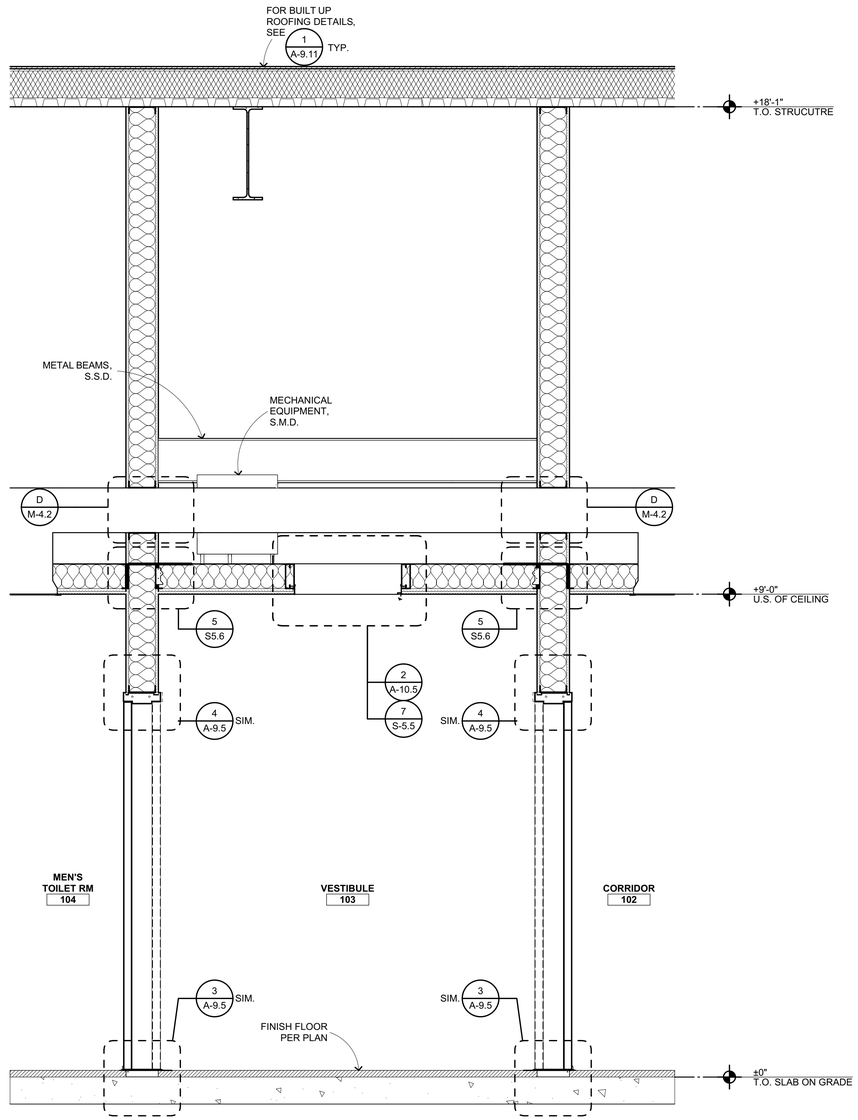

MEN'S W/R/CIRCULATION WALL 2

3/4" = 1'-0"

QUATTROCCHI KWOK
ARCHITECTS

Main Office:
636 Fifth Street, Santa Rosa, CA 95404
Pleasanton Office:
600 Main Street, Suite E,
Pleasanton, CA 94566
(707) 576-0829

LICENSED ARCHITECT
JIM THEISS
LICENSE # C22643
EXP JUNE 30, 2021
STATE OF CALIFORNIA

SIGNED: AUGUST 13, 2019

FREEDOM HIGH SCHOOL

PERFORMING ARTS AND CTE FACILITIES

1050 NEROLY RD,
OAKLEY, CA 94561

LIBERTY UNION HIGH SCHOOL DISTRICT

ARCH PROJECT NO:	1739.00
DRAWN BY:	
DRAWING SCALE:	
PTN:	61721-0068

BID SET

AUGUST 13, 2019

SHEET TITLE

BLDG A WALL SECTIONS

SHEET NUMBER

A-A6.15

BIM Server: BIMCLOUD-QKA - BIMcloud/1739.00 - Freedom High School/1739.00 FREEDOM HS Performing Arts Center:8/02/19 1:06 AM

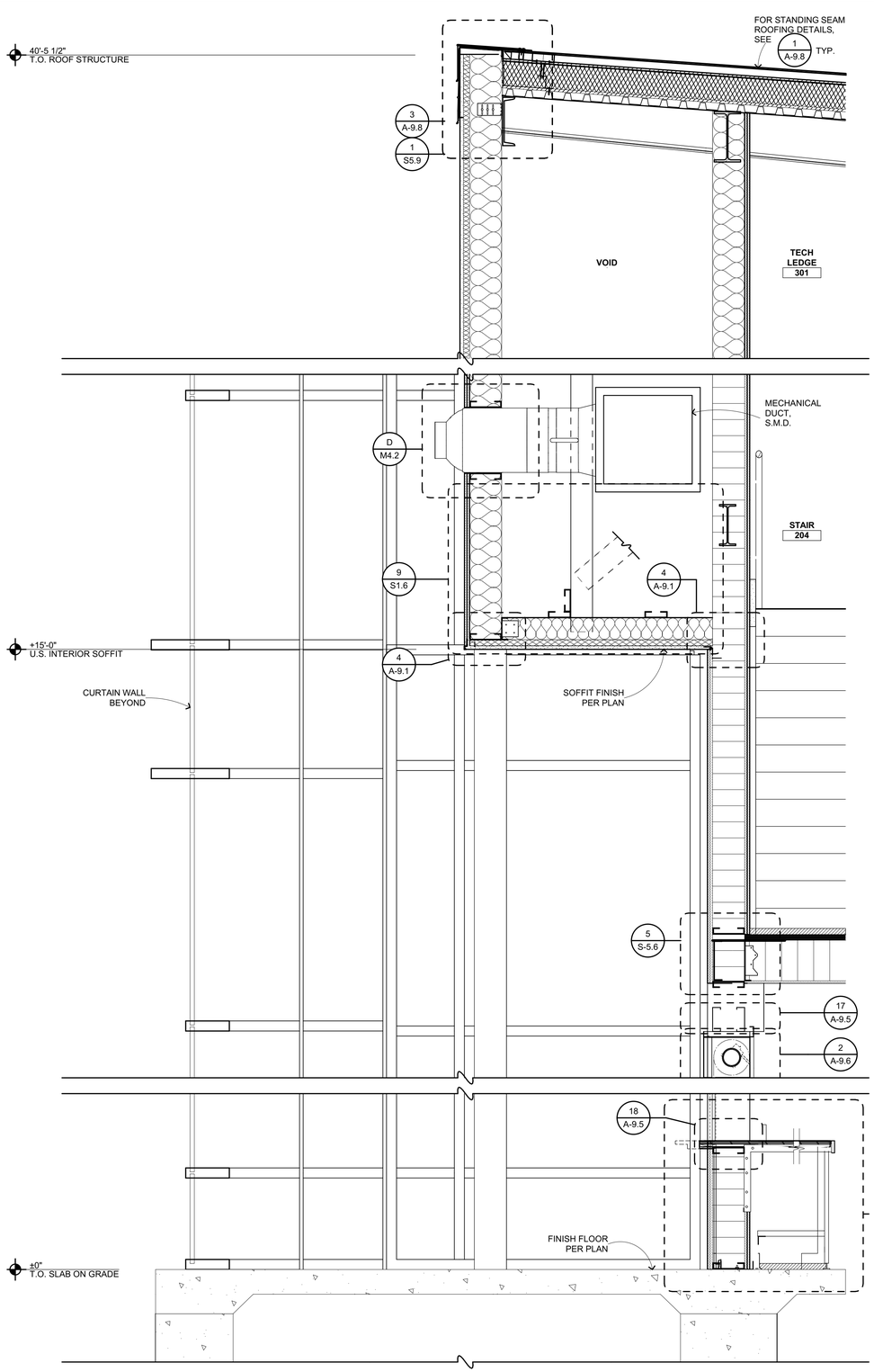

SECTION THROUGH LOBBY SOFFIT AND SUNSHADE 1

3/4" = 1'-0"

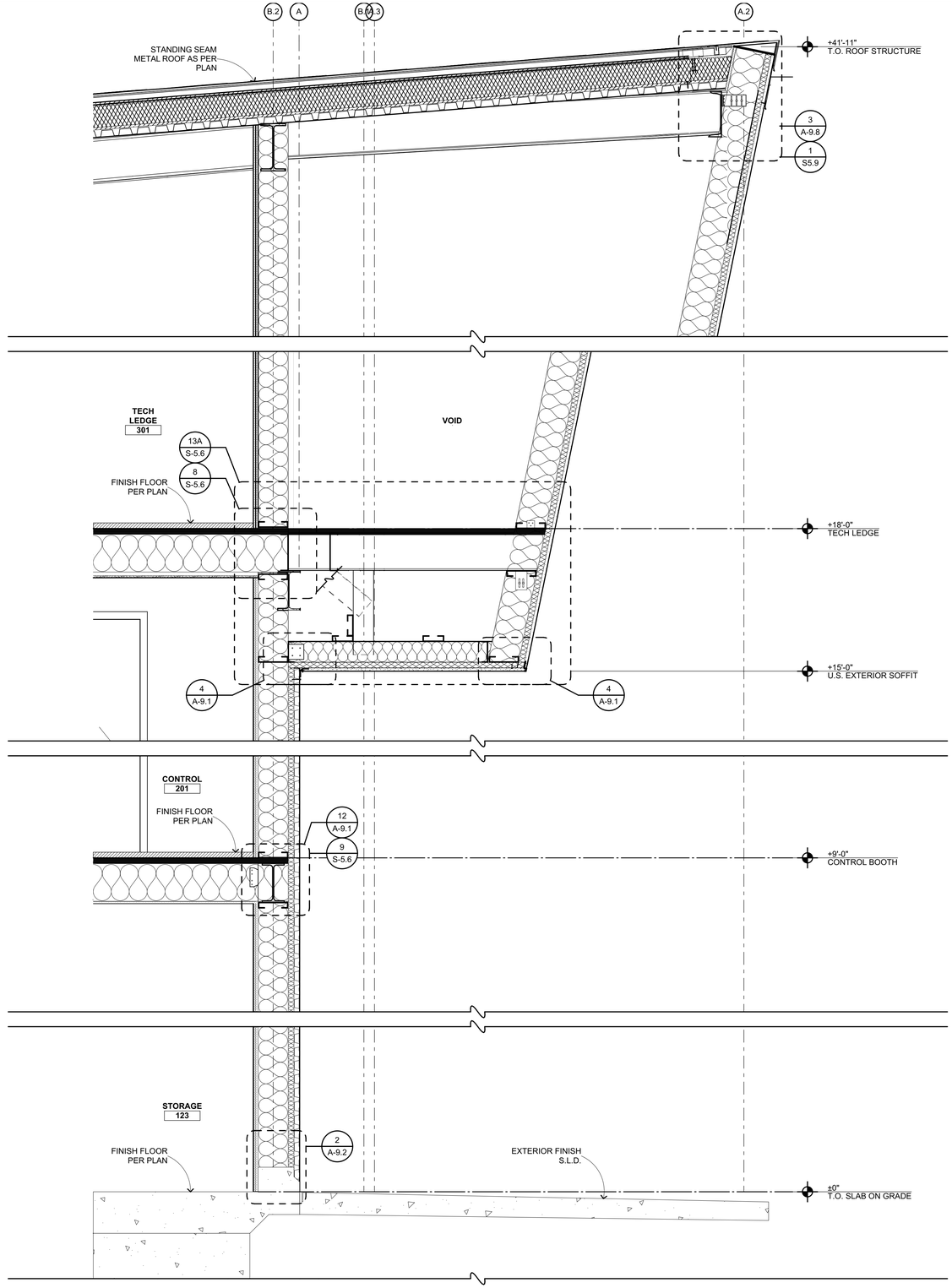

SECTION THROUGH CANTED WALL VOID 2

3/4" = 1'-0"

QUATTROCCHI KWOK ARCHITECTS
Main Office:
636 Fifth Street, Santa Rosa, CA 95404
Pleasanton Office:
600 Main Street, Suite E,
Pleasanton, CA 94566
(707) 576-0829

LICENSED ARCHITECT
JIM THEISS
LICENSE # C22643
EXP JUNE 30, 2021
STATE OF CALIFORNIA

SIGNED: AUGUST 13, 2019

FREEDOM HIGH SCHOOL

PERFORMING ARTS AND CTE FACILITIES

1050 NEROLY RD,
OAKLEY, CA 94561

LIBERTY UNION HIGH SCHOOL DISTRICT

ARCH PROJECT NO:	1739.00
DRAWN BY:	
DRAWING SCALE:	
PTN:	61721-0068

BID SET

AUGUST 13, 2019

SHEET TITLE

BLDG A WALL SECTIONS

SHEET NUMBER

A-A6.16

BIM Server: BIMCLOUD-QKA - BIMcloud/1739.00 - Freedom High School/1739.00 FREEDOM HS Performing Arts Center=8/02/19;1:06 AM

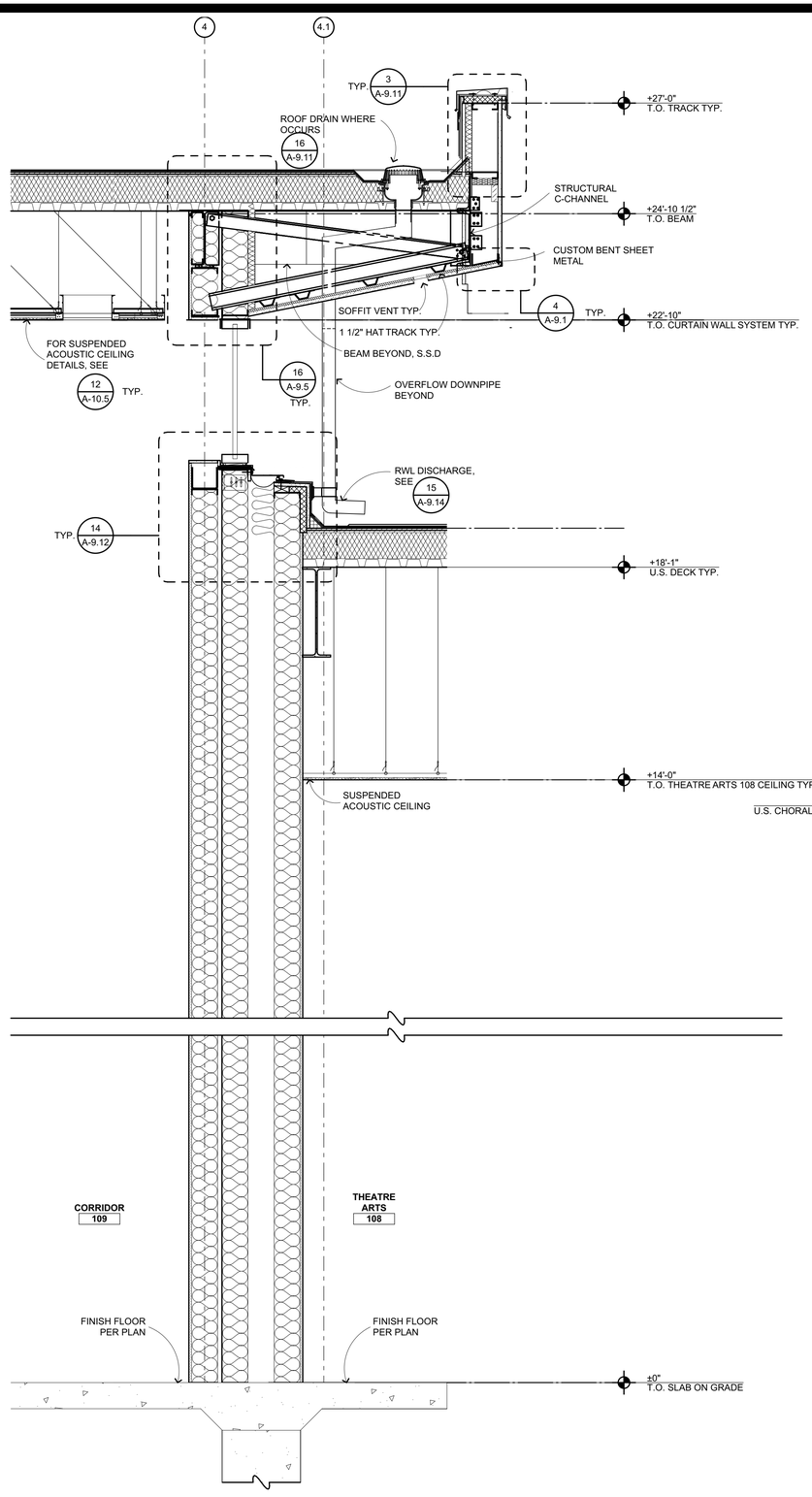

SECTION THROUGH THEATRE ARTS WALL 1

3/4" = 1'-0"

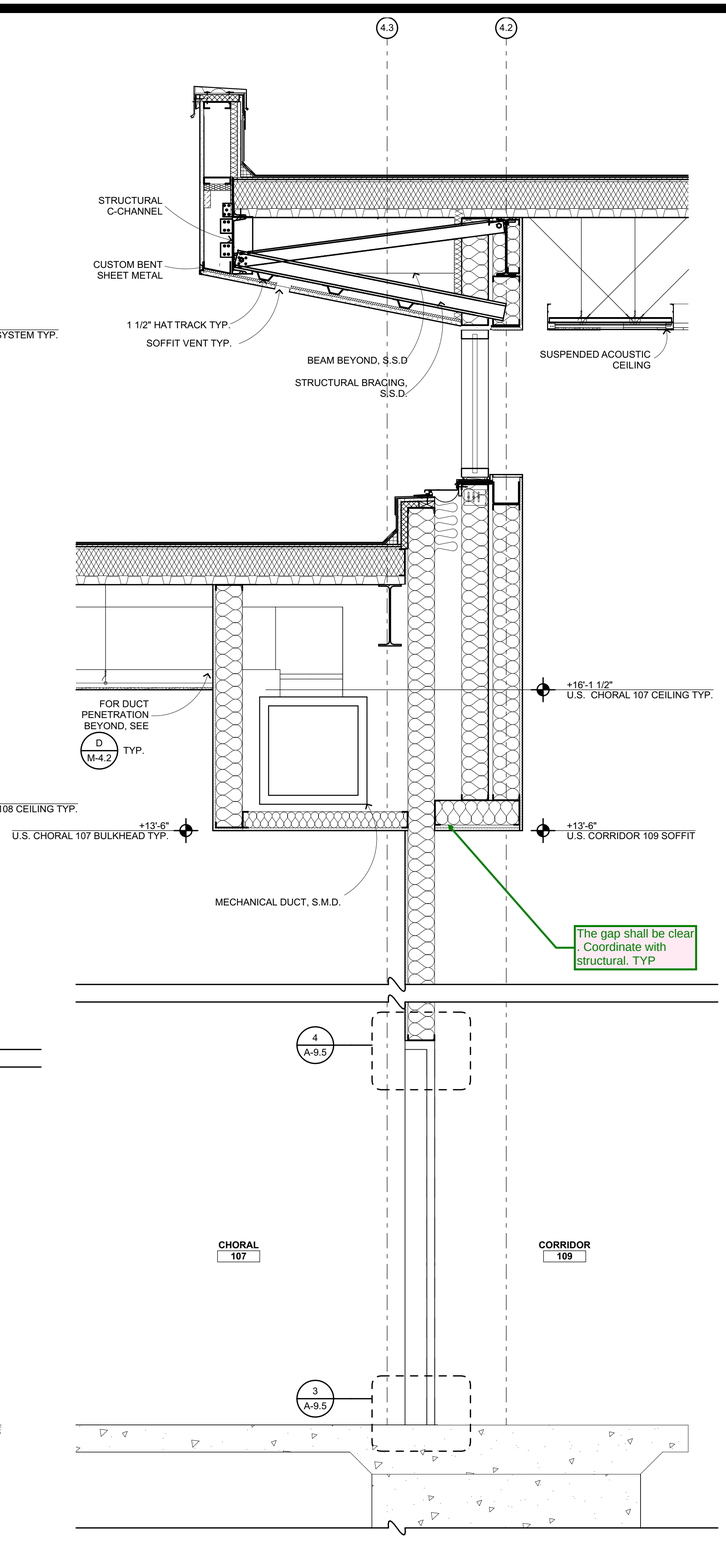

SECTION THROUGH CHORAL ROOM DOOR ALCOVE 2

3/4" = 1'-0"

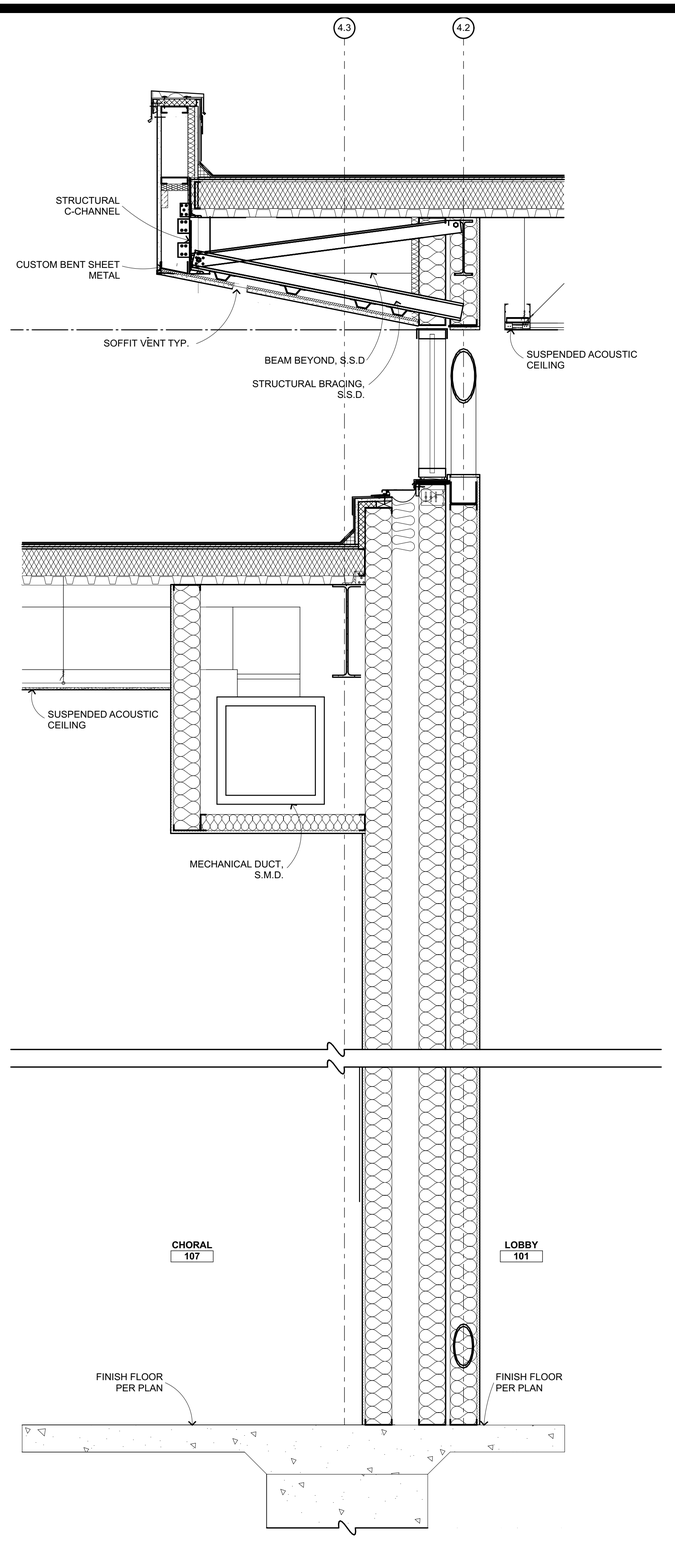

SECTION THROUGH CHORAL ROOM BULKHEAD 3

3/4" = 1'-0"

QUATTROCCHI KWOK ARCHITECTS
Main Office:
636 Fifth Street, Santa Rosa, CA 95404
Pleasanton Office:
600 Main Street, Suite E,
Pleasanton, CA 94566
(707) 576-0829

LICENSED ARCHITECT
JIM THEISS
LICENSE # C22643
EXP JUNE 30, 2021
STATE OF CALIFORNIA

SIGNED: AUGUST 13, 2019

FREEDOM HIGH SCHOOL

PERFORMING ARTS AND CTE FACILITIES

1050 NEROLY RD,
OAKLEY, CA 94561

LIBERTY UNION HIGH SCHOOL DISTRICT

ARCH PROJECT NO:	1739.00
DRAWN BY:	
DRAWING SCALE:	
PTN:	61721-0068

BID SET

AUGUST 13, 2019

SHEET TITLE

BLDG A WALL SECTIONS

SHEET NUMBER

A-A6.17

BIM Server: BIMCLOUD-QKA - BIMcloud/1739.00 - Freedom High School/1739.00 FREEDOM HS Performing Arts Center:8/02/19 1:06 AM

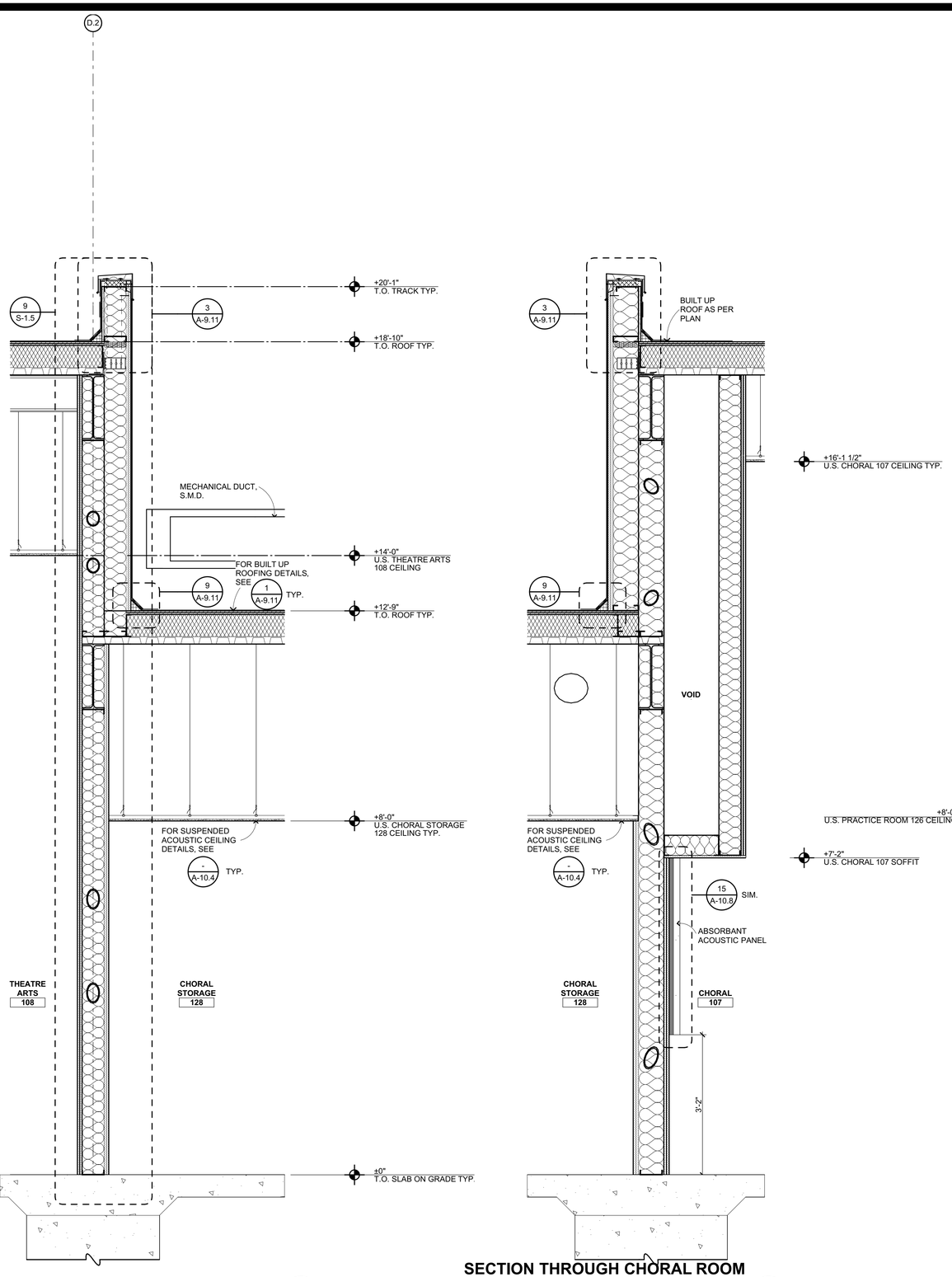

SECTION THROUGH CHORAL BLOCK ROOF 1

3/4" = 1'-0"

SECTION THROUGH CHORAL ROOM BULKHEAD 2

3/4" = 1'-0"

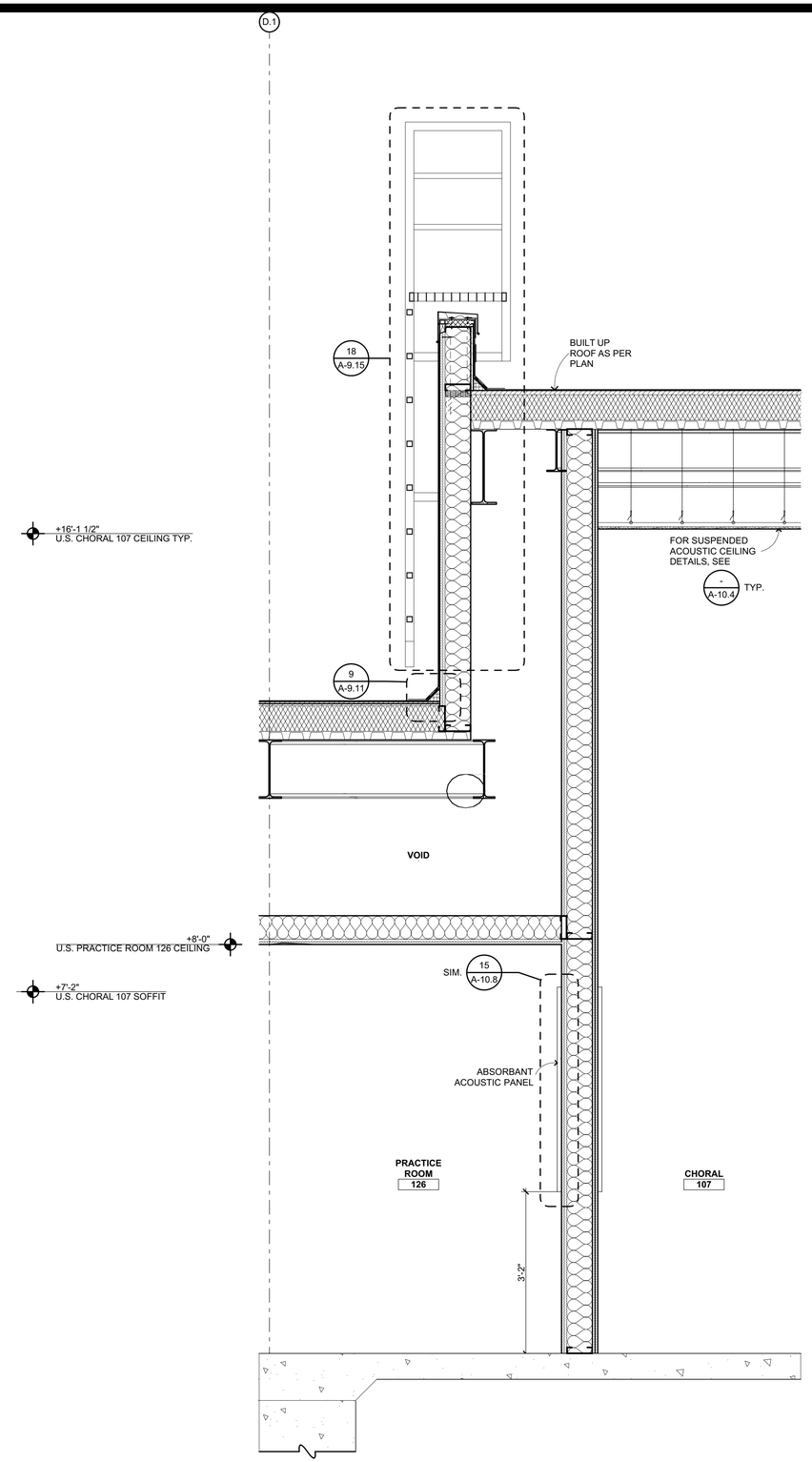

CHORAL/PRACTICE ROOM WALL 3

3/4" = 1'-0"

QUATTROCCHI KWOK
ARCHITECTS

Main Office:
636 Fifth Street, Santa Rosa, CA 95404
Pleasanton Office:
600 Main Street, Suite E,
Pleasanton, CA 94566
(707) 576-0829

LICENSED ARCHITECT
JIM THEISS
LICENSE # C22643
EXP JUNE 30, 2021
STATE OF CALIFORNIA

SIGNED: AUGUST 13, 2019

FREEDOM HIGH SCHOOL

PERFORMING ARTS AND CTE FACILITIES

1050 NEROLY RD,
OAKLEY, CA 94561

LIBERTY UNION HIGH SCHOOL DISTRICT

ARCH PROJECT NO:	1739.00
DRAWN BY:	
DRAWING SCALE:	
PTN:	61721-0068

BID SET

AUGUST 13, 2019

SHEET TITLE

BLDG A WALL SECTIONS

SHEET NUMBER

A-A6.18

BIM Server: BIMCLOUD-QKA - BIMcloud/1739.00 - Freedom High School/1739.00 FREEDOM HS Performing Arts Center.pln 8/02/19 1:06 AM

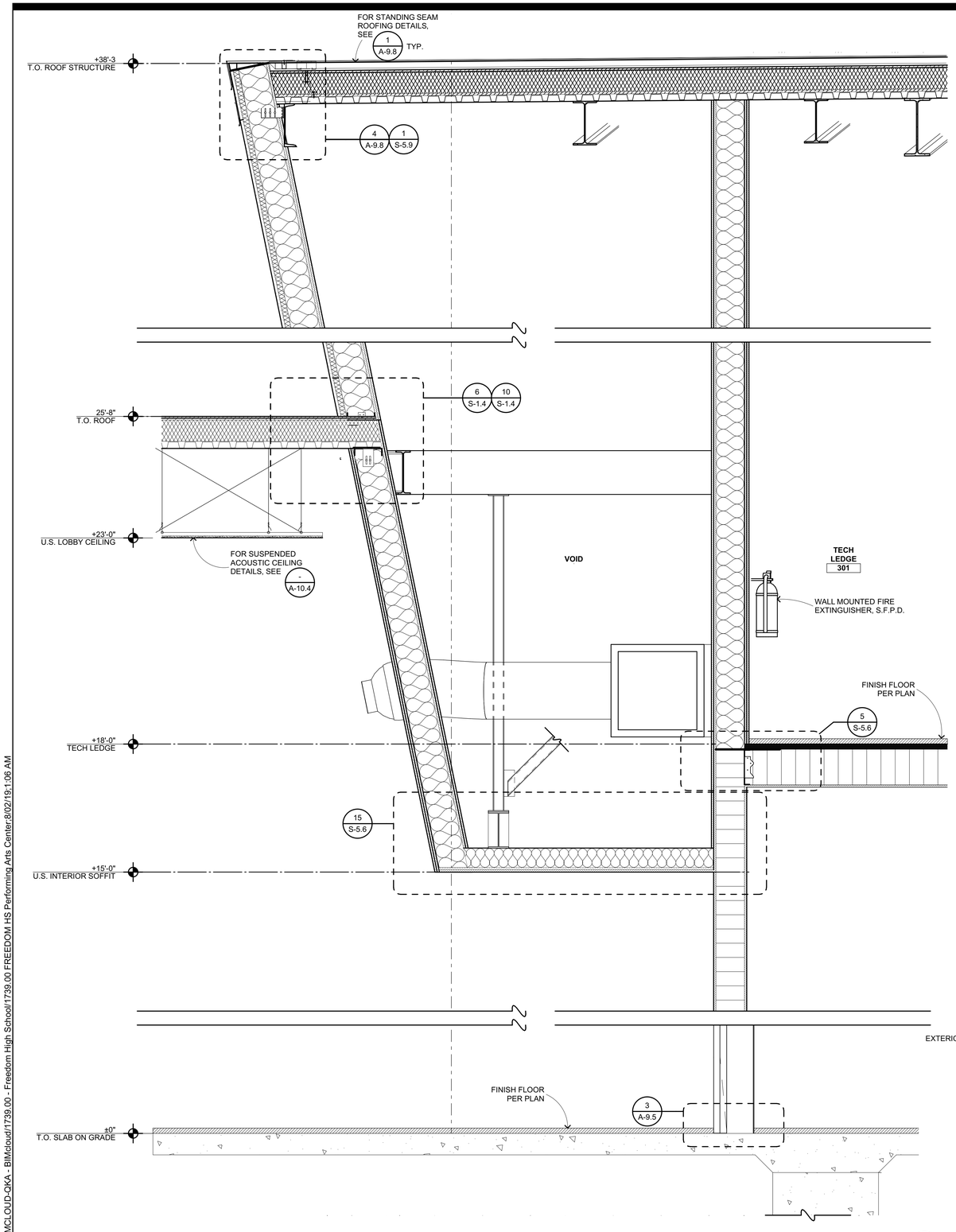

SECTION THROUGH LOBBY SOFFIT 1

3/4" = 1'-0"

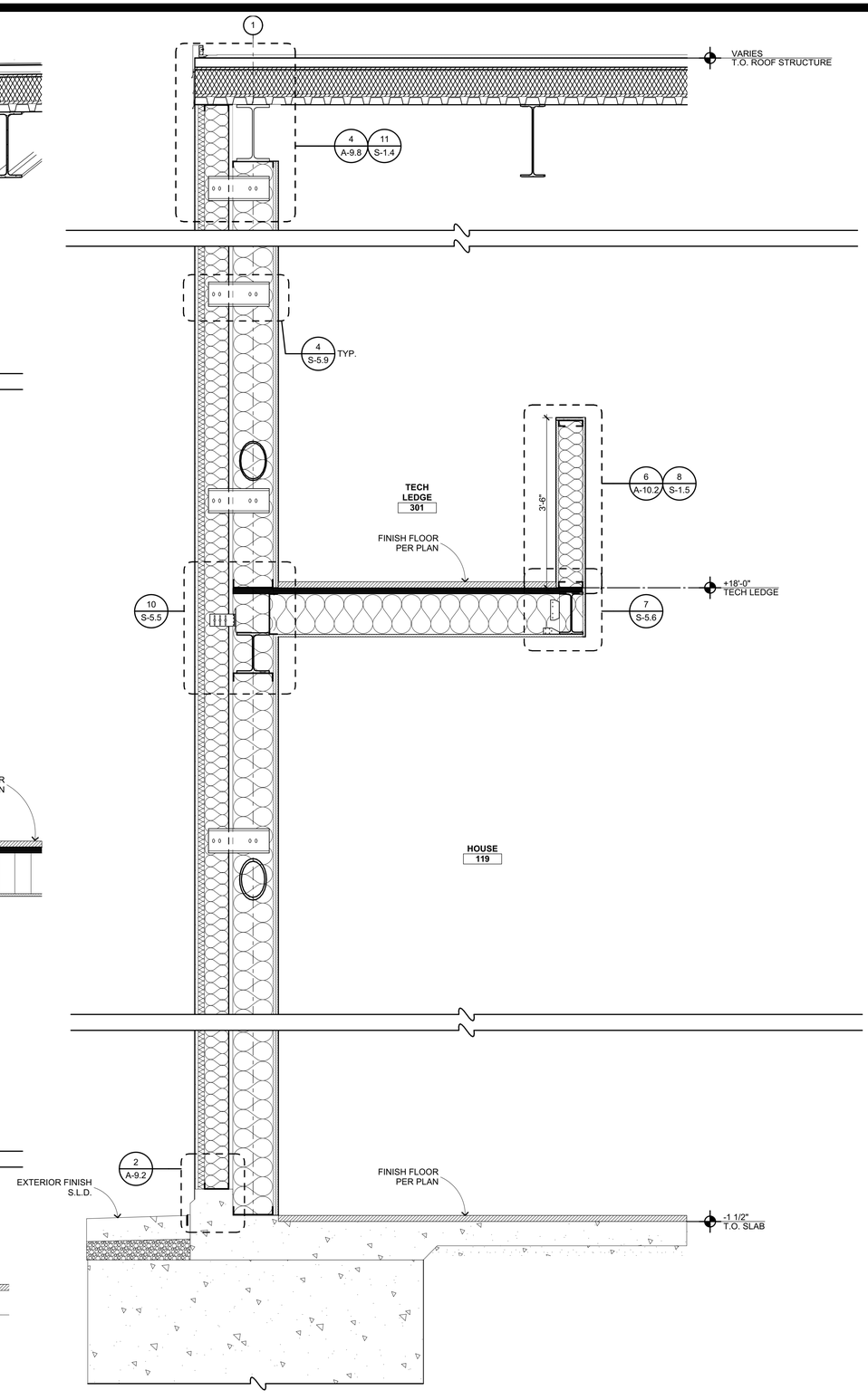

SECTION THROUGH TECH LEDGE WALKWAY 2

3/4" = 1'-0"

QUATTROCCHI KWOK ARCHITECTS
Main Office:
636 Fifth Street, Santa Rosa, CA 95404
Pleasanton Office:
600 Main Street, Suite E,
Pleasanton, CA 94566
(707) 576-0829

LICENSED ARCHITECT
JIM THEISS
LICENSE # C22643
EXP JUNE 30, 2021
STATE OF CALIFORNIA

SIGNED: AUGUST 13, 2019

FREEDOM HIGH SCHOOL

PERFORMING ARTS AND CTE FACILITIES

1050 NEROLY RD,
OAKLEY, CA 94561

LIBERTY UNION HIGH SCHOOL DISTRICT

ARCH PROJECT NO:	1739.00
DRAWN BY:	
DRAWING SCALE:	
PTN:	61721-0068

BID SET

AUGUST 13, 2019

SHEET TITLE

BLDG A WALL SECTIONS

SHEET NUMBER

A-A6.19

BIM Server: BIMCLOUD-QKA - BIMcloud/1739.00 - Freedom High School/1739.00 FREEDOM HS Performing Arts Center.8/02/19 1:06 AM

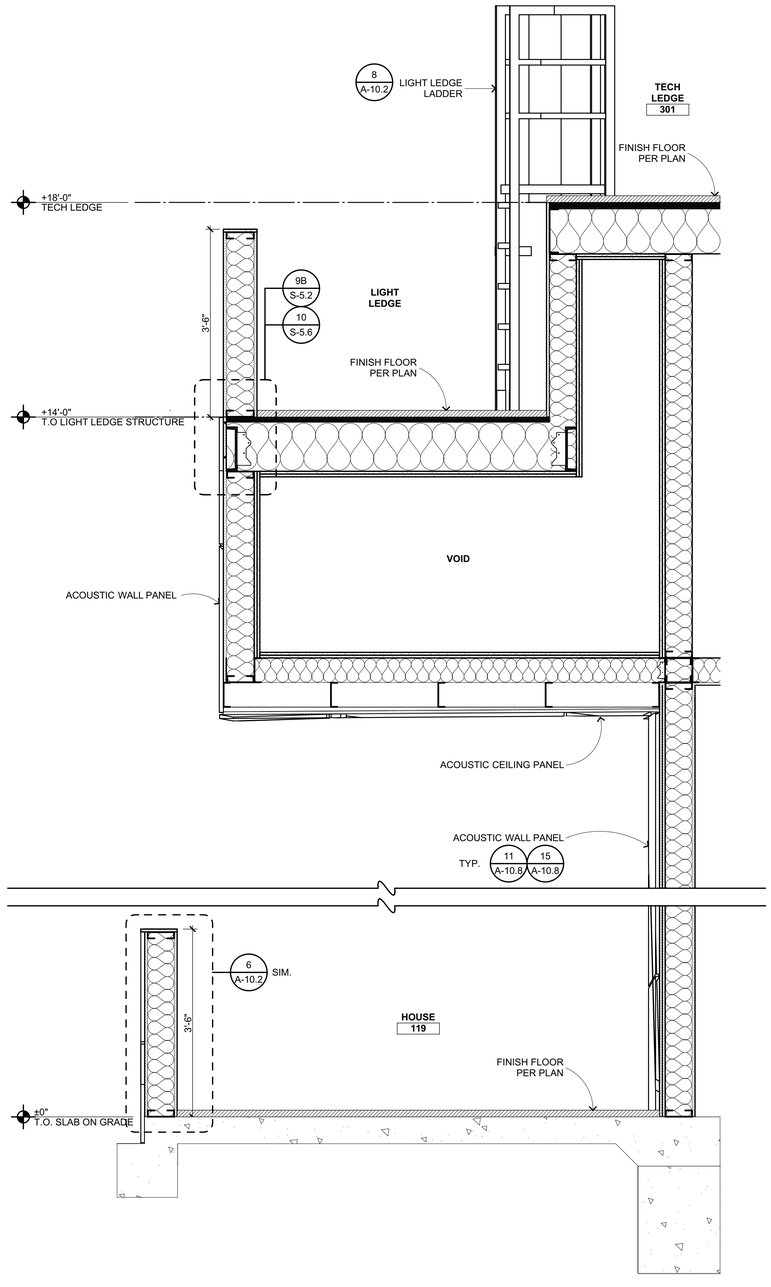

SECTION THROUGH LIGHT LEDGE 1

3/4" = 1'-0"

QUATTROCCHI KWOK ARCHITECTS
Main Office:
636 Fifth Street, Santa Rosa, CA 95404
Pleasanton Office:
600 Main Street, Suite E,
Pleasanton, CA 94566
(707) 576-0829

LICENSED ARCHITECT
JIM THEISS
LICENSE # C22643
EXP JUNE 30, 2021
STATE OF CALIFORNIA

SIGNED: AUGUST 13, 2019

FREEDOM HIGH SCHOOL

PERFORMING ARTS AND CTE FACILITIES

1050 NEROLY RD,
OAKLEY, CA 94561

LIBERTY UNION HIGH SCHOOL DISTRICT

ARCH PROJECT NO:	1739.00
DRAWN BY:	
DRAWING SCALE:	
PTN:	61721-0068

BID SET

AUGUST 13, 2019

SHEET TITLE

BLDG A WALL SECTIONS

SHEET NUMBER

A-A6.20

BIM Server: BIMCLOUD-QKA - BIMcloud/1739.00 - Freedom High School/1739.00 FREEDOM HS Performing Arts Center.8/02/19-1:06 AM

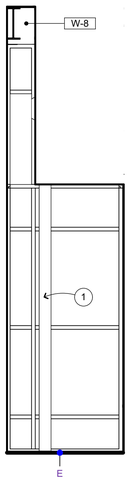

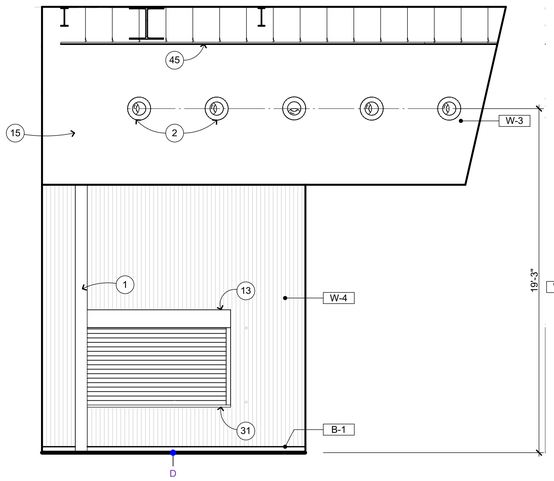

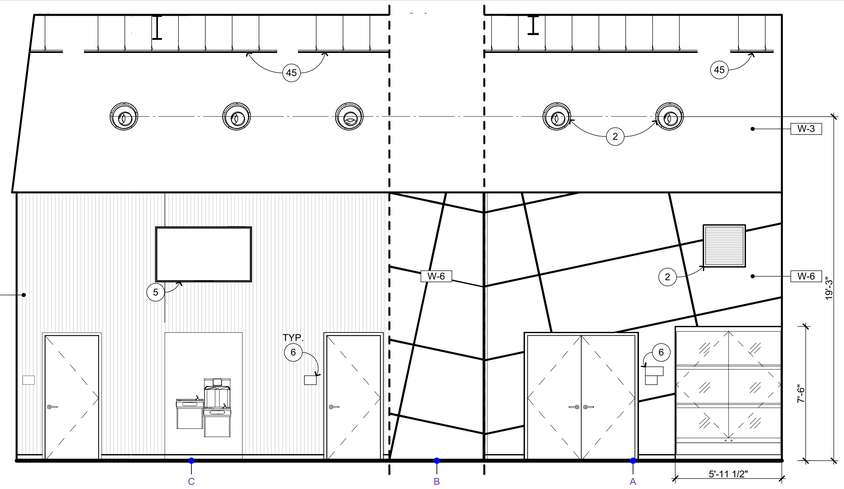

NORTH

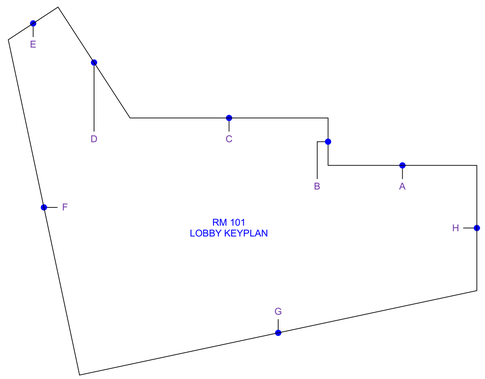

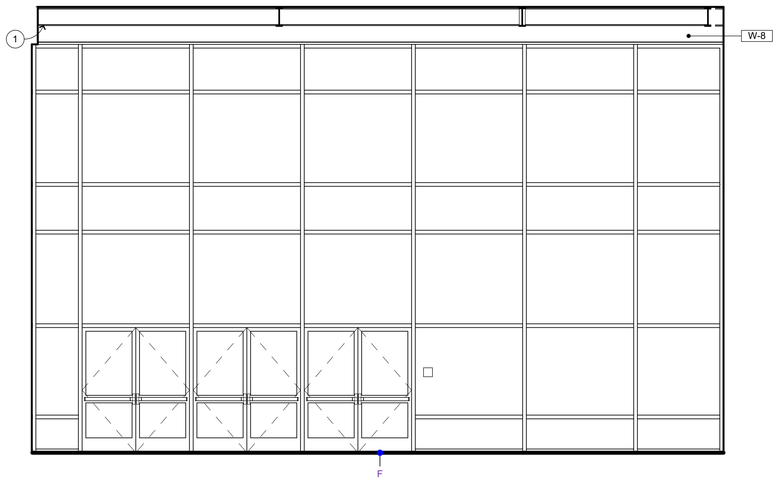

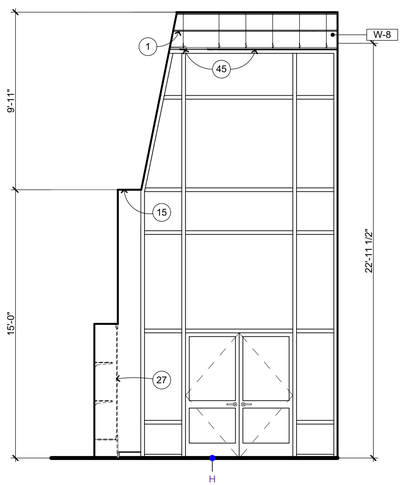

EAST

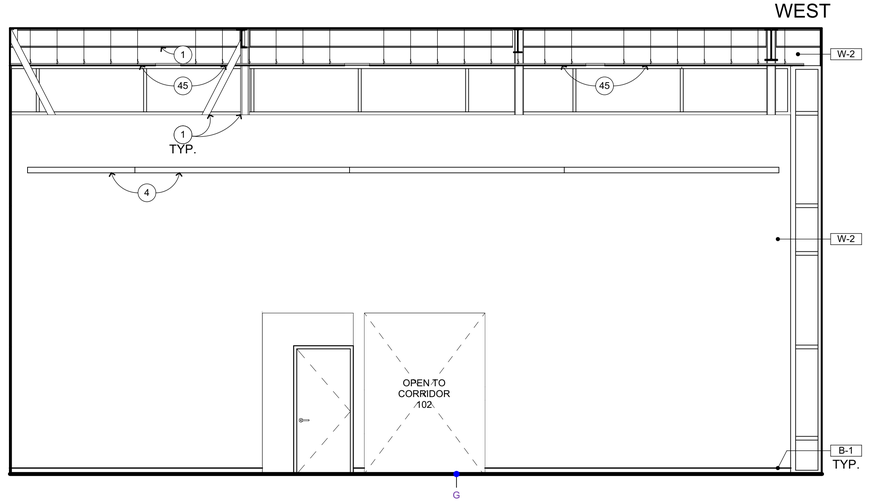

WEST

SOUTH

LOBBY **101**

1/4" = 1'-0" A-A2.1

INTERIOR ELEVATION KEYNOTES

NOT ALL KEYNOTES MAY APPLY TO THIS SHEET

1. STRUCTURAL ITEM, S.S.D.
2. MECHANICAL ITEM, S.M.D.
3. PLUMBING ITEM, S.P.D.
4. ELECTRICAL ITEM, S.E.D.
5. THEATRICAL ITEM, S.T.D.
6. SIGNAGE, SEE ARCHITECTURAL GRAPHICS PLAN
7. FIRE EXTINGUISHER, S.F.P.D. — 1 / A-10.1
8. SEMI RECESSED F.E.C., S.F.P.D. — 1 / A-10.2
9. RECESSED HOSE CABINET, S.F.P.D. — 4 / A-10.2
10. OVERHEAD DOOR — 2 / A-9.6
11. CHAINLINK FENCE AND GATE
12. EXTERIOR TICKETING WINDOW — 17 / A-9.5
13. ROLL UP COILING DOOR — 20 / A-9.5
14. FOLDING PARTITION
15. BULK HEAD
16. TENSION GRID, S.T.D. & S.S.D.
17. CATWALK, S.T.D. & S.S.D.
18. LIGHTING/EQUIPMENT GUARDRAILS, S.T.D. — 9 / A-9.17
19. GUARDRAILS, S.T.D. — 9 / A-9.17
20. HANDRAILS, S.T.D. — 2 / A-10.8
21. ACCESSIBLE HI-LO DRINKING FOUNTAIN W/ BOTTLE FILLER — 6 / A-10.1
22. EMERGENCY EYE WASH STATION
23. COMMERCIAL GRADE MOP SINK
24. DRESSING ROOM COUNTERTOP — 2 / A-10.6
25. TICKET COUNTERTOP — 4 / A-10.6
26. COSTUME SHELVES & POLE — 8 / A-10.7
27. TROPHY DISPLAY CASEWORK — 2 / A-10.7
28. AUDIO COUNTERTOP — 4 / A-10.6
29. CONTROL ROOM COUNTERTOP
30. TACK BOARD, SURFACE MOUNTED — 5 / A-10.2
31. CONCESSION COUNTERTOP
32. MARKER BOARD, SURFACE MOUNTED — 3 / A-10.1
33. MOTORIZED PROJECTION SCREEN — 7 / A-10.1
34. WALL MOUNTED SHORT THROW PROJECTOR, S.T.D. — 2 / AV-7.13
35. CEILING MOUNTED PROJECTOR, S.T.D. — 5 / AV-7.13
36. DRESSING ROOM MIRROR — 11 / A-10.1
37. ELECTRIC HAND DRYER
38. TOILET PARTITION — 9 / A-10.1
39. URINAL PARTITION — 9 / A-10.1
40. P-LAM FACED ACOUSTICAL WALL PANELS
41. LADDER — 18 / A-10.1
42. ACOUSTIC REFLECTORS
43. 1" THICK FABRIC WRAPPED ACOUSTICAL WALL PANELS
44. 2" THICK FABRIC WRAPPED ACOUSTICAL WALL PANELS
45. SUSPENDED ACOUSTIC CEILING, SEE REFLECTED CEILING PLAN
46. CANE RAIL — 9 / A-10.2
47. DRESSING ROOM SHELF
48. P-LAM WALL CAP TO MATCH ACOUSTIC REFLECTORS — 1 / A-10.1

INTERIOR ELEVATION GENERAL NOTES

1. NOTES AND SYMBOLS ARE TO APPLY AT ALL AREAS OF SIMILAR GRAPHI REPRESENTATION. SUCH INDICATIONS MAY BE LIMITED TO PROMOTE CLARITY OR AVOID REDUNDANCY. NO LIMITATION OF APPLICATION SHALL BE CONSTRUED WITHOUT SPECIFIC NOTATION.
2. REFER TO MECHANICAL DRAWINGS FOR REGISTERS AND VENTS NOT OTHERWISE SHOWN.
3. REFER TO ELECTRICAL DRAWINGS FOR HORNS, SPEAKERS, PULL STATIONS AND OTHER FEATURES NOT OTHERWISE SHOWN.
4. REFER TO THEATRICAL DRAWINGS FOR EQUIPMENTS AND OTHER FEATURES NOT OTHERWISE SHOWN.
5. TYPICAL MOUNTING HEIGHTS OF ACCESSIBLE ELEMENTS AT ACCESSIBLE FIXTURES SEE 4 / A-10.1
6. FLUSH VALVE HANDLES SHALL BE LOCATED AT THE WIDE SIDE OF ACCESSIBLE STALL.
7. FLOORING & BASE SHALL EXTEND UNDER ACCESSIBLE SINK/LAVATORY BASE CABINETS TO THE WALL. HOT WATER AND DRAINPIPES ACCESSIBLE UNDER LAVATORIES SHALL BE INSULATED OR OTHERWISE COVERED. THERE SHALL BE NO SHARP OR ABRASIVE SURFACES UNDE LAVATORIES.
8. PROVIDE SOLID BLOCKING FOR CABINET, ACCESSORY, OR EQUIPMENT MOUNTING

WALL AND BASE FINISH CODES

NOT ALL CODES MAY APPLY TO THIS SHEET, SEE FINISH & COLOR SCHEDU

W-1	PAINTED GYP. BD. TYP.	B-1	4" COVED RUBBER BASE TYP.
W-2	PAINTED GYP. BD. TO MATCH STUCCO (DARK)	B-2	4" VENTED RUBBER BASE
W-3	PAINTED GYP. BD. TO MATCH STUCCO (LIGHT)	B-3	SHEET VINYL BASE
W-4	METAL PANELS (BLUE)	B-4	FLUID APPLIED EPOXY
W-5	TILE TYP.		
W-6	ACOUSTIC PANELS		
W-7	FIBER REINFORCED PANELS		
W-8	PAINTED GYP. BD. TO MATCH CEILING CL-7		
W-9	FRP PANEL		

LEGEND

TYPICAL WALL CORNERLINE (SEE FLOOR PLAN)

SCHEMATIC WALL (PLAN VIEW) - BEND AT WALL CORNERLINE REPRESENTED ALPHABETICALLY. INTERIOR ELEVATIONS SHOWS WALL IN FLATTENED STATE. NOTE, SCHEMATIC WALL DRAWN AT HALF SCALE U.N.O.

QUATTROCCHI KWOK ARCHITECTS

Main Office:
636 Fifth Street, Santa Rosa, CA 95404
Pleasanton Office:
600 Main Street, Suite E,
Pleasanton, CA 94566
(707) 576-0829

LICENSED ARCHITECT
JIM THEISS
LICENSE # C22643
EXP JUNE 30, 2021
STATE OF CALIFORNIA

SIGNED: AUGUST 13, 2019

FREEDOM HIGH SCHOOL

PERFORMING ARTS AND CTE FACILITIES

1050 NEROLY RD,
OAKLEY, CA 94561

LIBERTY UNION HIGH SCHOOL DISTRICT

ARCH PROJECT NO: 1739.00
DRAWN BY:
DRAWING SCALE:
PTN: 61721-0068

BID SET

AUGUST 13, 2019

SHEET TITLE

BLDG A INTERIOR ELEVATIONS

SHEET NUMBER

A-A7.1

BIM Server: BIMCLOUD-QKA - BIMcloud/1739.00 - Freedom High School/1739.00 FREEDOM HS Performing Arts Center.8/6/2019 4:36 PM

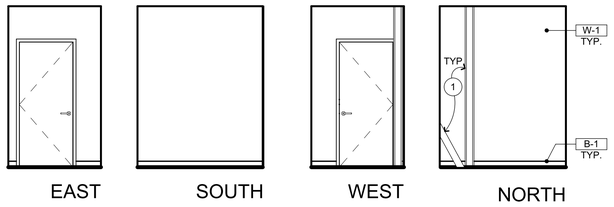

VESTIBULE **103**

1/4" = 1'-0" A-A2.1

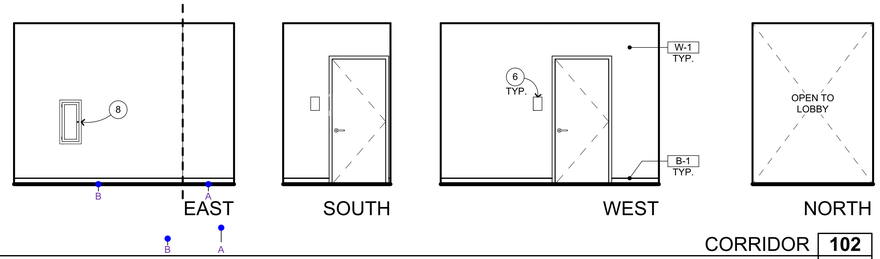

CORRIDOR **102**

1/4" = 1'-0" A-A2.1

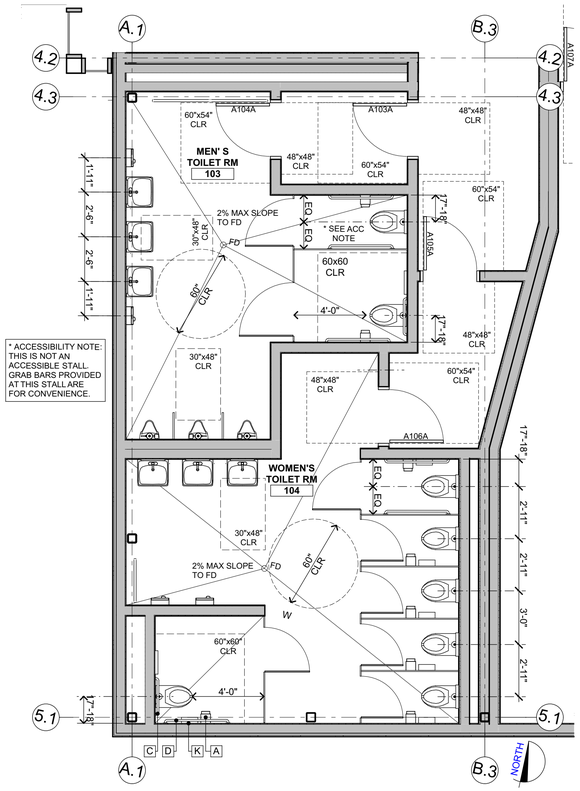

ENLARGED FLOOR PLANS @ FIRST FLOOR 1 (1)

1/4" = 1'-0"

ACCESSORY SCHEDULE

NOT ALL ACCESSORY MAY APPLY TO THIS SHEET

A	TOILET PAPER DISPENSER, RECESSED, (3" MAXIMUM PROJECTION)
B	TOILET PAPER DISPENSER, SURFACE MOUNTED
C	36" GRAB BAR, FOR ATTACHMENT SEE 4/A-10.1, 5/A-10.1
D	42" GRAB BAR, FOR ATTACHMENT SEE 4/A-10.1, 11/A-10.1
E	MIRROR (TYP), FOR ATTACHMENT SEE
F	PAPER TOWEL DISPENSER, SURFACE MOUNTED
G	SOAP DISPENSER, SURFACE MOUNTED
H	TOILET SEAT COVER DISPENSER, SURFACE MOUNTED
J	SANITARY NAPKIN RECEPTACLE, RECESSED (3" MAXIMUM PROJECTION)
K	SANITARY NAPKIN RECEPTACLE
L	ELECTRIC HAND DRYER

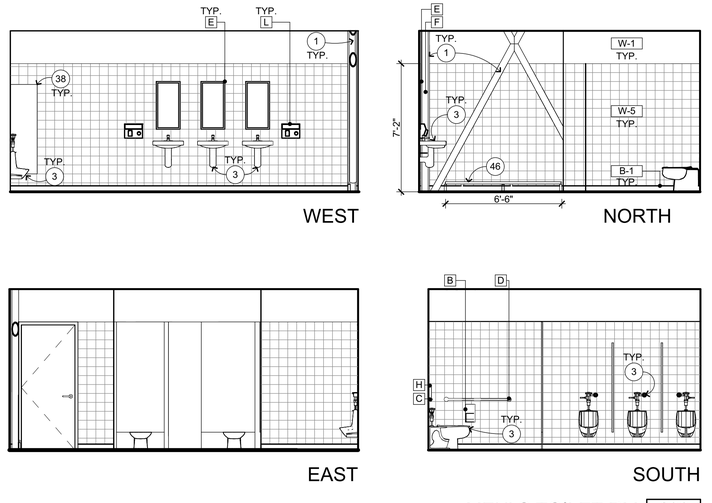

MEN' S TOILET RM **103**

1/4" = 1'-0" A-A2.1

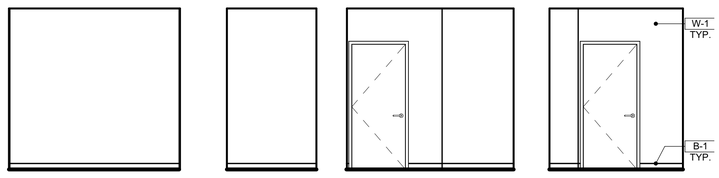

VESTIBULE **105**

1/4" = 1'-0" A-A2.1

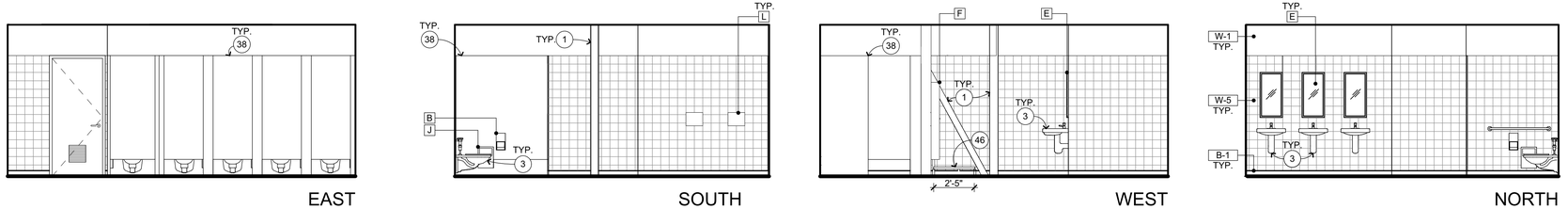

WOMEN'S TOILET RM **104**

1/4" = 1'-0" A-A2.1

INTERIOR ELEVATION KEYNOTES

NOT ALL KEYNOTES MAY APPLY TO THIS SHEET

1. STRUCTURAL ITEM, S.S.D.
2. MECHANICAL ITEM, S.M.D.
3. PLUMBING ITEM, S.P.D.
4. ELECTRICAL ITEM, S.E.D.
5. THEATRICAL ITEM, S.T.D.
6. SIGNAGE, SEE ARCHITECTURAL GRAPHICS PLAN
7. FIRE EXTINGUISHER, S.F.P.D. — 1/A-10.1
8. SEMI RECESSED F.E.C., S.F.P.D. — 1/A-10.2
9. RECESSED HOSE CABINET, S.F.P.D. — 4/A-10.2
10. OVERHEAD DOOR — 2/A-9.6
11. CHAINLINK FENCE AND GATE
12. EXTERIOR TICKETING WINDOW — 17/A-9.5
13. ROLL UP COILING DOOR — 20/A-9.5
14. FOLDING PARTITION
15. BULK HEAD
16. TENSION GRID, S.T.D. & S.S.D.
17. CATWALK, S.T.D. & S.S.D.
18. LIGHTING/EQUIPMENT GUARDRAILS, S.T.D. — 9/A-9.17
19. GUARDRAILS, S.T.D. — 9/A-9.17
20. HANDRAILS, S.T.D. — 2/A-10.8
21. ACCESSIBLE HI-LO DRINKING FOUNTAIN W/ BOTTLE FILLER — 6/A-10.1
22. EMERGENCY EYE WASH STATION
23. COMMERCIAL GRADE MOP SINK
24. DRESSING ROOM COUNTERTOP — 2/A-10.6
25. TICKET COUNTERTOP — 4/A-10.6
26. COSTUME SHELVES & POLE — 8/A-10.7
27. TROPHY DISPLAY CASEWORK — 2/A-10.7
28. AUDIO COUNTERTOP — 4/A-10.6
29. CONTROL ROOM COUNTERTOP
30. TACK BOARD, SURFACE MOUNTED — 5/A-10.2
31. CONCESSION COUNTERTOP
32. MARKER BOARD, SURFACE MOUNTED — 3/A-10.1
33. MOTORIZED PROJECTION SCREEN — 7/A-10.1
34. WALL MOUNTED SHORT THROW PROJECTOR, S.T.D. — 2/AV-7.13, 1/A-10.1
35. CEILING MOUNTED PROJECTOR, S.T.D. — 5/AV-7.13
36. DRESSING ROOM MIRROR — 11/A-10.1
37. ELECTRIC HAND DRYER
38. TOILET PARTITION — 9/A-10.1
39. URINAL PARTITION — 9/A-10.1
40. P-LAM FACED ACOUSTICAL WALL PANELS — 18/A-10.1
41. LADDER
42. ACOUSTIC REFLECTORS
43. 1" THICK FABRIC WRAPPED ACOUSTICAL WALL PANELS
44. 2" THICK FABRIC WRAPPED ACOUSTICAL WALL PANELS
45. SUSPENDED ACOUSTIC CEILING, SEE REFLECTED CEILING PLAN
46. CANE RAIL — 9/A-10.2
47. DRESSING ROOM SHELF
48. P-LAM WALL CAP TO MATCH ACOUSTIC REFLECTORS

INTERIOR ELEVATION GENERAL NOTES

1. NOTES AND SYMBOLS ARE TO APPLY AT ALL AREAS OF SIMILAR GRAPHIC REPRESENTATION. SUCH INDICATIONS MAY BE LIMITED TO PROMOTE CLARITY OR AVOID REDUNDANCY. NO LIMITATION OF APPLICATION SHALL BE CONSTRUED WITHOUT SPECIFIC NOTATION.
2. REFER TO MECHANICAL DRAWINGS FOR REGISTERS AND VENTS NOT OTHERWISE SHOWN.
3. REFER TO ELECTRICAL DRAWINGS FOR HORNS, SPEAKERS, PULL STATIONS AND OTHER FEATURES NOT OTHERWISE SHOWN.
4. REFER TO THEATRICAL DRAWINGS FOR EQUIPMENTS AND OTHER FEATURES NOT OTHERWISE SHOWN.
5. TYPICAL MOUNTING HEIGHTS OF ACCESSIBLE ELEMENTS AT ACCESSIBLE FIXTURES SEE 4/A-10.1
6. FLUSH VALVE HANDLES SHALL BE LOCATED AT THE WIDE SIDE OF ACCESSIBLE STALL.
7. FLOORING & BASE SHALL EXTEND UNDER ACCESSIBLE SINK/LAVATORY BASE CABINETS TO THE WALL. HOT WATER AND DRAINPIPES ACCESSIBLE UNDER LAVATORIES SHALL BE INSULATED OR OTHERWISE COVERED. THERE SHALL BE NO SHARP OR ABRASIVE SURFACES UNDER LAVATORIES.
8. PROVIDE SOLID BLOCKING FOR CABINET, ACCESSORY, OR EQUIPMENT MOUNTING

WALL AND BASE FINISH CODES

NOT ALL CODES MAY APPLY TO THIS SHEET, SEE FINISH & COLOR SCHEDULE

W-1	PAINTED GYP. BD. TYP.	B-1	4" COVED RUBBER BASE TYP.
W-2	PAINTED GYP. BD. TO MATCH STUCCO (DARK)	B-2	4" VENTED RUBBER BASE
W-3	PAINTED GYP. BD. TO MATCH STUCCO (LIGHT)	B-3	SHEET VINYL BASE
W-4	METAL PANELS (BLUE)	B-4	FLUID APPLIED EPOXY
W-5	TILE TYP.		
W-6	ACOUSTIC PANELS		
W-7	FIBER REINFORCED PANELS		
W-8	PAINTED GYP. BD. TO MATCH CEILING CL-7		
W-9	FRP PANEL		

LEGEND

TYPICAL WALL CORNERLINE (SEE FLOOR PLAN)

SCHEMATIC WALL (PLAN VIEW) - BEND AT WALL CORNERLINE REPRESENTED ALPHABETICALLY. INTERIOR ELEVATIONS SHOWS WALL IN FLATTENED STATE. NOTE, SCHEMATIC WALL DRAWN AT HALF SCALE U.N.O.

QUATTROCCHI KWOK ARCHITECTS

Main Office:
636 Fifth Street, Santa Rosa, CA 95404
Pleasanton Office:
600 Main Street, Suite E,
Pleasanton, CA 94566
(707) 576-0829

LICENSED ARCHITECT
JIM THEISS
LICENSE # C22643
EXP JUNE 30, 2021
STATE OF CALIFORNIA

SIGNED: AUGUST 13, 2019

FREEDOM HIGH SCHOOL

PERFORMING ARTS AND CTE FACILITIES

1050 NEROLY RD,
OAKLEY, CA 94561

LIBERTY UNION HIGH SCHOOL DISTRICT

ARCH PROJECT NO: 1739.00
DRAWN BY:
DRAWING SCALE:
PTN: 61721-0068

BID SET

AUGUST 13, 2019

SHEET TITLE

BLDG A INTERIOR ELEVATIONS

SHEET NUMBER

A-A7.2

BIM Server: BIMCLOUD-QKA - BIMcloud/1739.00 - Freedom High School/1739.00 FREEDOM HS Performing Arts Center 8/6/2019 4:45 PM

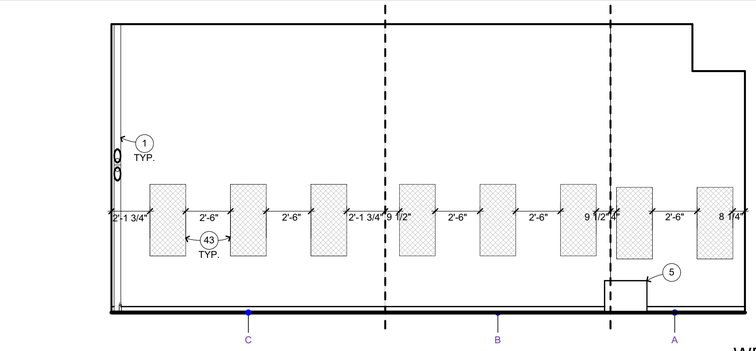

WEST

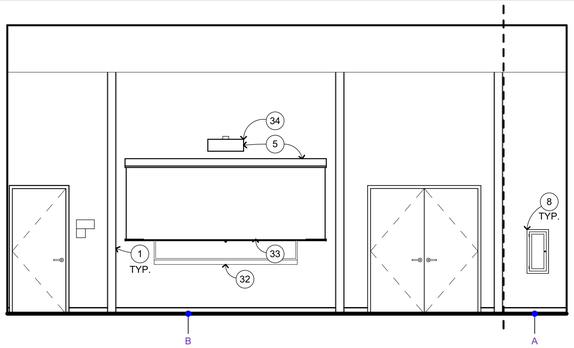

NORTH

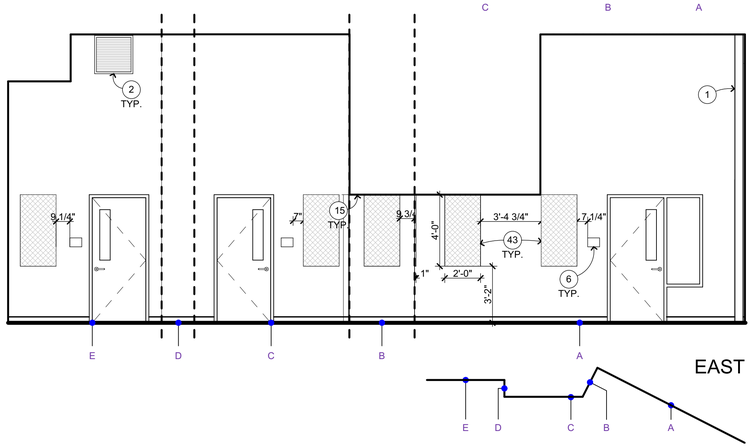

EAST

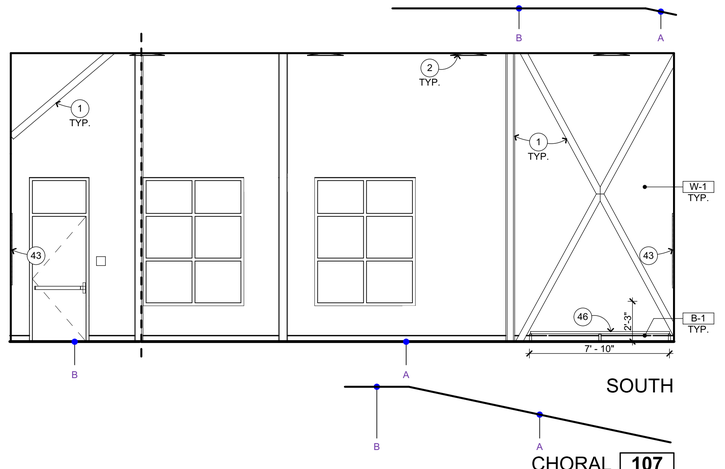

SOUTH

CHORAL **107**
1/4" = 1'-0" A-A7.3

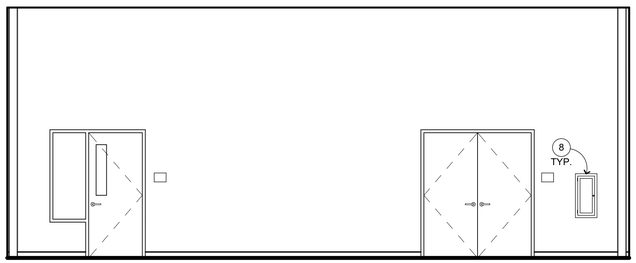

WEST

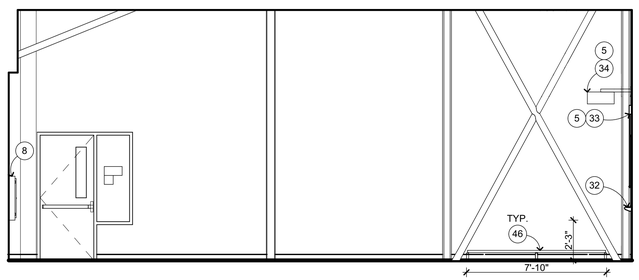

NORTH

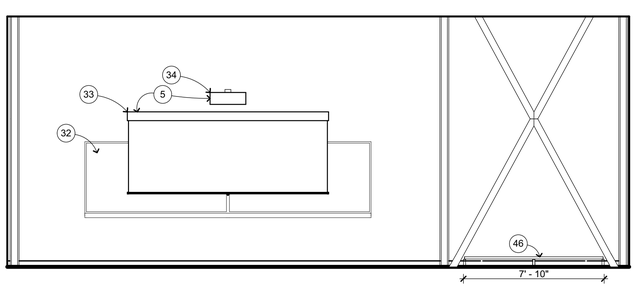

EAST

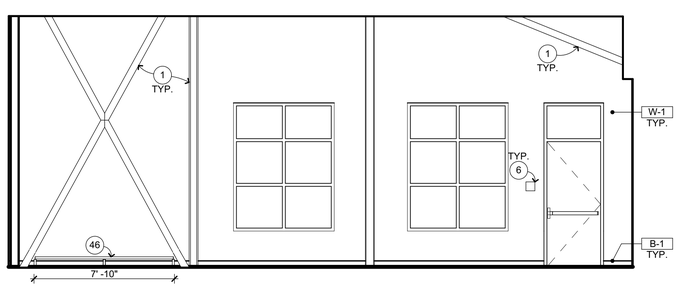

SOUTH

THEATRE ARTS **108**
1/4" = 1'-0" A-A2.1

INTERIOR ELEVATION KEYNOTES

NOT ALL KEYNOTES MAY APPLY TO THIS SHEET

1. STRUCTURAL ITEM, S.S.D.
2. MECHANICAL ITEM, S.M.D.
3. PLUMBING ITEM, S.P.D.
4. ELECTRICAL ITEM, S.E.D.
5. THEATRICAL ITEM, S.T.D.
6. SIGNAGE, SEE ARCHITECTURAL GRAPHICS PLAN
7. FIRE EXTINGUISHER, S.F.P.D. → 1 A-10.1
8. SEMI RECESSED F.E.C., S.F.P.D. → 1 A-10.2
9. RECESSED HOSE CABINET, S.F.P.D. → 4 A-10.2
10. OVERHEAD DOOR → 2 A-9.6
11. CHAINLINK FENCE AND GATE
12. EXTERIOR TICKETING WINDOW → 17 A-9.5
13. ROLL UP COILING DOOR → 20 A-9.5
14. FOLDING PARTITION
15. BULK HEAD
16. TENSION GRID, S.T.D. & S.S.D.
17. CATWALK, S.T.D. & S.S.D.
18. LIGHTING/EQUIPMENT GUARDRAILS, S.T.D. → 9 A-9.17
19. GUARDRAILS, S.T.D. → 9 A-9.17
20. HANDRAILS, S.T.D. → 2 A-10.8
21. ACCESSIBLE HI-LO DRINKING FOUNTAIN W/ BOTTLE FILLER → 6 A-10.1
22. EMERGENCY EYE WASH STATION
23. COMMERCIAL GRADE MOP SINK
24. DRESSING ROOM COUNTERTOP → 2 A-10.6
25. TICKET COUNTERTOP → 4 A-10.6
26. COSTUME SHELVES & POLE → 8 A-10.7
27. TROPHY DISPLAY CASEWORK → 2 A-10.7
28. AUDIO COUNTERTOP → 4 A-10.6
29. CONTROL ROOM COUNTERTOP
30. TACK BOARD, SURFACE MOUNTED → 5 A-10.2
31. CONCESSION COUNTERTOP
32. MARKER BOARD, SURFACE MOUNTED → 3 A-10.1
33. MOTORIZED PROJECTION SCREEN → 7 A-10.1
34. WALL MOUNTED SHORT THROW PROJECTOR, S.T.D. → 2 AV-7.13, 1 A-10.1
35. CEILING MOUNTED PROJECTOR, S.T.D. → 5 AV-7.13
36. DRESSING ROOM MIRROR → 11 A-10.1
37. ELECTRIC HAND DRYER
38. TOILET PARTITION → 9 A-10.1
39. URINAL PARTITION → 9 A-10.1
40. P-LAM FACED ACOUSTICAL WALL PANELS → 18 A-10.1
41. LADDER
42. ACOUSTIC REFLECTORS
43. 1" THICK FABRIC WRAPPED ACOUSTICAL WALL PANELS
44. 2" THICK FABRIC WRAPPED ACOUSTICAL WALL PANELS
45. SUSPENDED ACOUSTIC CEILING, SEE REFLECTED CEILING PLAN
46. CANE RAIL → 9 A-10.2
47. DRESSING ROOM SHELF
48. P-LAM WALL CAP TO MATCH ACOUSTIC REFLECTORS

INTERIOR ELEVATION GENERAL NOTES

1. NOTES AND SYMBOLS ARE TO APPLY AT ALL AREAS OF SIMILAR GRAPHI REPRESENTATION. SUCH INDICATIONS MAY BE LIMITED TO PROMOTE CLARITY OR AVOID REDUNDANCY. NO LIMITATION OF APPLICATION SHALL BE CONSTRUED WITHOUT SPECIFIC NOTATION.
2. REFER TO MECHANICAL DRAWINGS FOR REGISTERS AND VENTS NOT OTHERWISE SHOWN.
3. REFER TO ELECTRICAL DRAWINGS FOR HORNS, SPEAKERS, PULL STATIONS AND OTHER FEATURES NOT OTHERWISE SHOWN.
4. REFER TO THEATRICAL DRAWINGS FOR EQUIPMENTS AND OTHER FEATURES NOT OTHERWISE SHOWN.
5. TYPICAL MOUNTING HEIGHTS OF ACCESSIBLE ELEMENTS AT ACCESSIBLE FIXTURES SEE → 4 A-10.1
6. FLUSH VALVE HANDLES SHALL BE LOCATED AT THE WIDE SIDE OF ACCESSIBLE STALL.
7. FLOORING & BASE SHALL EXTEND UNDER ACCESSIBLE SINK/LAVATORY BASE CABINETS TO THE WALL. HOT WATER AND DRAINPIPES ACCESSIBLE UNDER LAVATORIES SHALL BE INSULATED OR OTHERWISE COVERED. THERE SHALL BE NO SHARP OR ABRASIVE SURFACES UNDE LAVATORIES.
8. PROVIDE SOLID BLOCKING FOR CABINET, ACCESSORY, OR EQUIPMENT MOUNTING

WALL AND BASE FINISH CODES

NOT ALL CODES MAY APPLY TO THIS SHEET, SEE FINISH & COLOR SCHEDU

W-1	PAINTED GYP. BD. TYP.	B-1	4" COVED RUBBER BASE TYP.
W-2	PAINTED GYP. BD. TO MATCH STUCCO (DARK)	B-2	4" VENTED RUBBER BASE
W-3	PAINTED GYP. BD. TO MATCH STUCCO (LIGHT)	B-3	SHEET VINYL BASE
W-4	METAL PANELS (BLUE)	B-4	FLUID APPLIED EPOXY
W-5	TILE TYP.		
W-6	ACOUSTIC PANELS		
W-7	FIBER REINFORCED PANELS		
W-8	PAINTED GYP. BD. TO MATCH CEILING CL-7		
W-9	FRP PANEL		

LEGEND

- - - - - TYPICAL WALL CORNERLINE (SEE FLOOR PLAN)

A B C — SCHEMATIC WALL (PLAN VIEW) - BEND AT WALL CORNERLINE REPRESENTED ALPHABETICALLY. INTERIOR ELEVATIONS SHOWS WALL IN FLATTENED STATE. NOTE, SCHEMATIC WALL DRAWN AT HALF SCALE U.N.O.

QUATTROCCHI KWOK ARCHITECTS
Main Office:
636 Fifth Street, Santa Rosa, CA 95404
Pleasanton Office:
600 Main Street, Suite E,
Pleasanton, CA 94566
(707) 576-0829

LICENSED ARCHITECT
JIM THEISS
LICENSE # C22643
EXP JUNE 30, 2021
STATE OF CALIFORNIA

SIGNED: AUGUST 13, 2019

FREEDOM HIGH SCHOOL

PERFORMING ARTS AND CTE FACILITIES

1050 NEROLY RD,
OAKLEY, CA 94561

LIBERTY UNION HIGH SCHOOL DISTRICT

ARCH PROJECT NO:	1739.00
DRAWN BY:	
DRAWING SCALE:	1/4" = 1'-0"
PTN:	61721-0068

BID SET

AUGUST 13, 2019

SHEET TITLE

BLDG A INTERIOR ELEVATIONS

SHEET NUMBER

A-A7.3

BIM Server: BIMCLOUD-QKA - BIMcloud/1739.00 - Freedom High School/1739.00 FREEDOM HS Performing Arts Center,8/6/2019 4:47 PM

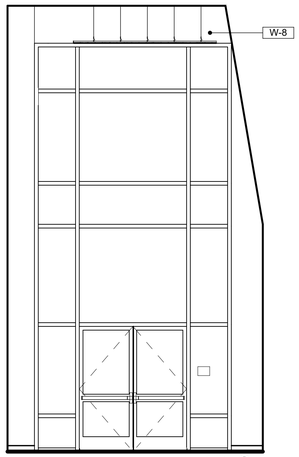

WEST

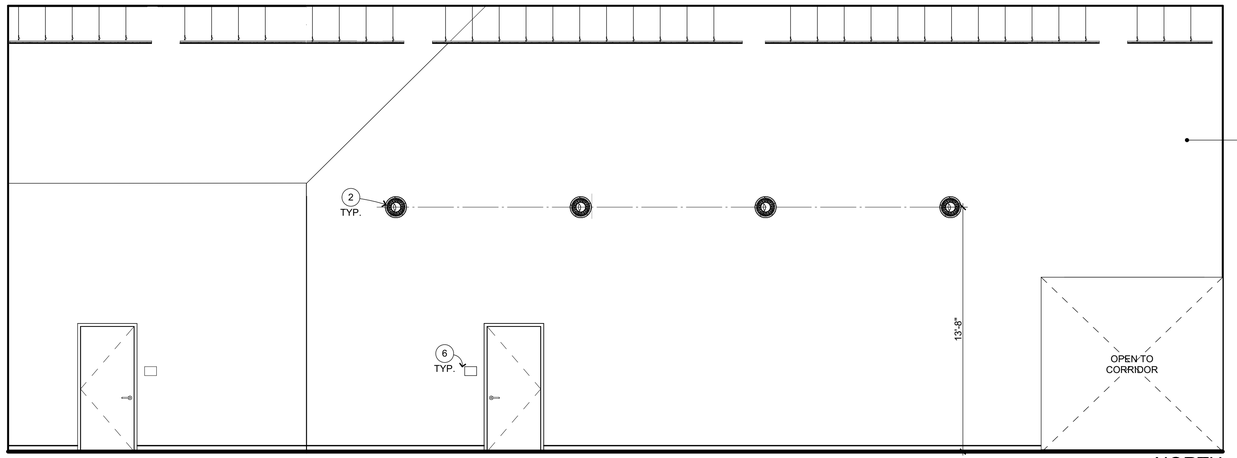

NORTH

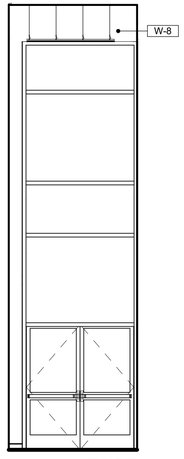

EAST

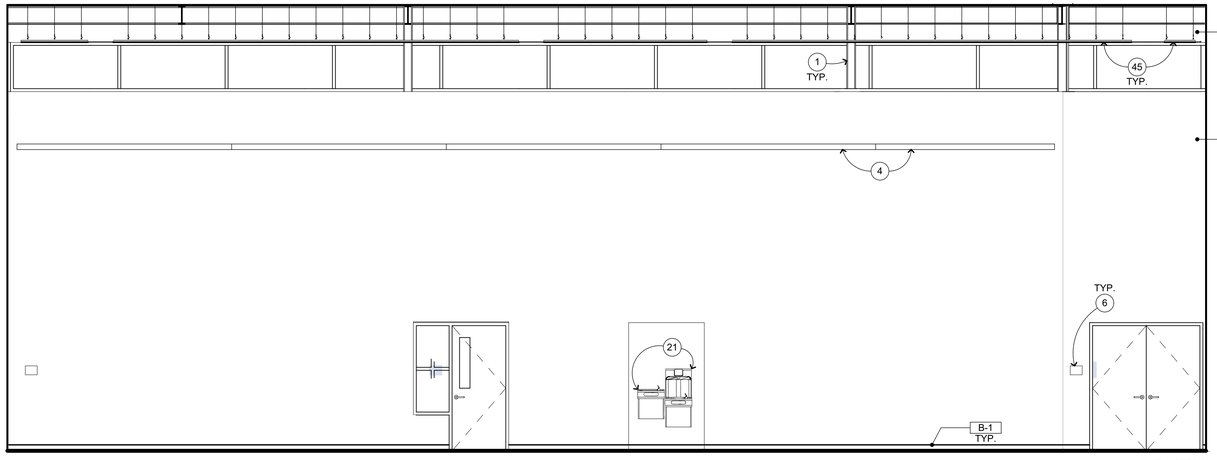

SOUTH
CORRIDOR **109**
1/4" = 1'-0" A-A2.1

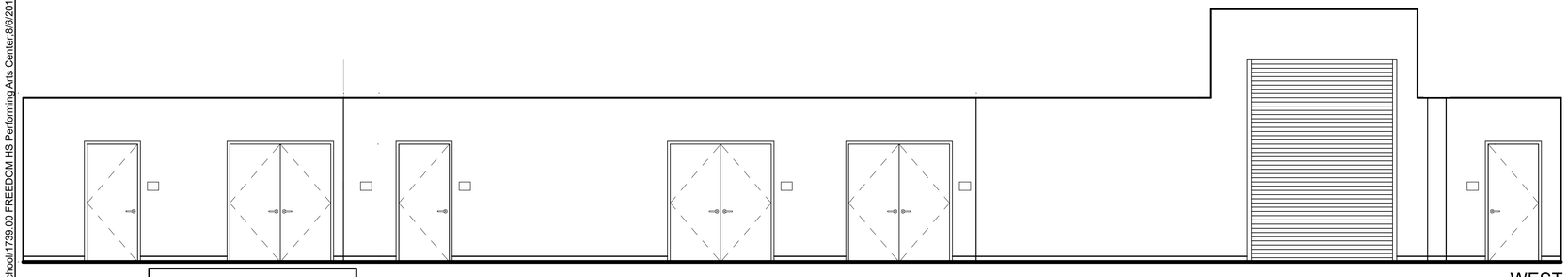

WEST NORTH

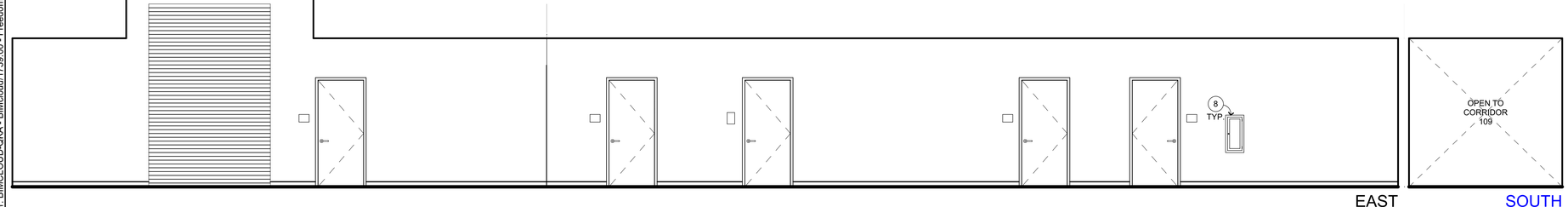

EAST SOUTH
CORRIDOR **110**
1/4" = 1'-0" A-A2.1

INTERIOR ELEVATION KEYNOTES

NOT ALL KEYNOTES MAY APPLY TO THIS SHEET

1. STRUCTURAL ITEM, S.S.D.
2. MECHANICAL ITEM, S.M.D.
3. PLUMBING ITEM, S.P.D.
4. ELECTRICAL ITEM, S.E.D.
5. THEATRICAL ITEM, S.T.D.
6. SIGNAGE, SEE ARCHITECTURAL GRAPHICS PLAN
7. FIRE EXTINGUISHER, S.F.P.D. — 1 / A-10.1
8. SEMI RECESSED F.E.C., S.F.P.D. — 1 / A-10.2
9. RECESSED HOSE CABINET, S.F.P.D. — 4 / A-10.2
10. OVERHEAD DOOR — 2 / A-9.6
11. CHAINLINK FENCE AND GATE
12. EXTERIOR TICKETING WINDOW — 17 / A-9.5
13. ROLL UP COILING DOOR — 20 / A-9.5
14. FOLDING PARTITION
15. BULK HEAD
16. TENSION GRID, S.T.D. & S.S.D.
17. CATWALK, S.T.D. & S.S.D.
18. LIGHTING/EQUIPMENT GUARDRAILS, S.T.D. — 9 / A-9.17
19. GUARDRAILS, S.T.D. — 9 / A-9.17
20. HANDRAILS, S.T.D. — 2 / A-10.8
21. ACCESSIBLE HI-LO DRINKING FOUNTAIN W/ BOTTLE FILLER — 6 / A-10.1
22. EMERGENCY EYE WASH STATION
23. COMMERCIAL GRADE MOP SINK
24. DRESSING ROOM COUNTERTOP — 2 / A-10.6
25. TICKET COUNTERTOP — 4 / A-10.6
26. COSTUME SHELVES & POLE — 8 / A-10.7
27. TROPHY DISPLAY CASEWORK — 2 / A-10.7
28. AUDIO COUNTERTOP — 4 / A-10.6
29. CONTROL ROOM COUNTERTOP
30. TACK BOARD, SURFACE MOUNTED — 5 / A-10.2
31. CONCESSION COUNTERTOP
32. MARKER BOARD, SURFACE MOUNTED — 3 / A-10.1
33. MOTORIZED PROJECTION SCREEN — 7 / A-10.1
34. WALL MOUNTED SHORT THROW PROJECTOR, S.T.D. — 2 / AV-7.13, 1 / A-10.1
35. CEILING MOUNTED PROJECTOR, S.T.D. — 5 / AV-7.13
36. DRESSING ROOM MIRROR — 11 / A-10.1
37. ELECTRIC HAND DRYER
38. TOILET PARTITION — 9 / A-10.1
39. URINAL PARTITION — 9 / A-10.1
40. P-LAM FACED ACOUSTICAL WALL PANELS
41. LADDER — 18 / A-10.1
42. ACOUSTIC REFLECTORS
43. 1" THICK FABRIC WRAPPED ACOUSTICAL WALL PANELS
44. 2" THICK FABRIC WRAPPED ACOUSTICAL WALL PANELS
45. SUSPENDED ACOUSTIC CEILING, SEE REFLECTED CEILING PLAN
46. CANE RAIL — 9 / A-10.2
47. DRESSING ROOM SHELF
48. P-LAM WALL CAP TO MATCH ACOUSTIC REFLECTORS

INTERIOR ELEVATION GENERAL NOTES

1. NOTES AND SYMBOLS ARE TO APPLY AT ALL AREAS OF SIMILAR GRAPHIC REPRESENTATION. SUCH INDICATIONS MAY BE LIMITED TO PROMOTE CLARITY OR AVOID REDUNDANCY. NO LIMITATION OF APPLICATION SHALL BE CONSTRUED WITHOUT SPECIFIC NOTATION.
2. REFER TO MECHANICAL DRAWINGS FOR REGISTERS AND VENTS NOT OTHERWISE SHOWN.
3. REFER TO ELECTRICAL DRAWINGS FOR HORNS, SPEAKERS, PULL STATIONS AND OTHER FEATURES NOT OTHERWISE SHOWN.
4. REFER TO THEATRICAL DRAWINGS FOR EQUIPMENTS AND OTHER FEATURES NOT OTHERWISE SHOWN.
5. TYPICAL MOUNTING HEIGHTS OF ACCESSIBLE ELEMENTS AT ACCESSIBLE FIXTURES SEE — 4 / A-10.1
6. FLUSH VALVE HANDLES SHALL BE LOCATED AT THE WIDE SIDE OF ACCESSIBLE STALL.
7. FLOORING & BASE SHALL EXTEND UNDER ACCESSIBLE SINK/LAVATORY BASE CABINETS TO THE WALL. HOT WATER AND DRAINPIPES ACCESSIBLE UNDER LAVATORIES SHALL BE INSULATED OR OTHERWISE COVERED. THERE SHALL BE NO SHARP OR ABRASIVE SURFACES UNDER LAVATORIES.
8. PROVIDE SOLID BLOCKING FOR CABINET, ACCESSORY, OR EQUIPMENT MOUNTING.

WALL AND BASE FINISH CODES

NOT ALL CODES MAY APPLY TO THIS SHEET, SEE FINISH & COLOR SCHEDU

W-1	PAINTED GYP. BD. TYP.	B-1	4" COVED RUBBER BASE TYP.
W-2	PAINTED GYP. BD. TO MATCH STUCCO (DARK)	B-2	4" VENTED RUBBER BASE
W-3	PAINTED GYP. BD. TO MATCH STUCCO (LIGHT)	B-3	SHEET VINYL BASE
W-4	METAL PANELS (BLUE)	B-4	FLUID APPLIED EPOXY
W-5	TILE TYP.		
W-6	ACOUSTIC PANELS		
W-7	FIBER REINFORCED PANELS		
W-8	PAINTED GYP. BD. TO MATCH CEILING CL-7		
W-9	FRP PANEL		

LEGEND

TYPICAL WALL CORNERLINE (SEE FLOOR PLAN)

SCHEMATIC WALL (PLAN VIEW) - BEND AT WALL CORNERLINE REPRESENTED ALPHABETICALLY. INTERIOR ELEVATIONS SHOWS WALL IN FLATTENED STATE. NOTE, SCHEMATIC WALL DRAWN AT HALF SCALE U.N.O.

QUATTROCCHI KWOK ARCHITECTS
Main Office:
636 Fifth Street, Santa Rosa, CA 95404
Pleasanton Office:
600 Main Street, Suite E,
Pleasanton, CA 94566
(707) 576-0829

LICENSED ARCHITECT
JIM THEISS
LICENSE # C22643
EXP JUNE 30, 2021
STATE OF CALIFORNIA

SIGNED: AUGUST 13, 2019

FREEDOM HIGH SCHOOL

PERFORMING ARTS AND CTE FACILITIES

1050 NEROLY RD,
OAKLEY, CA 94561

LIBERTY UNION HIGH SCHOOL DISTRICT

ARCH PROJECT NO:	1739.00
DRAWN BY:	*fill out manualy ea sheet!*
DRAWING SCALE:	1/4" = 1'-0"
PTN:	61721-0068

BID SET

AUGUST 13, 2019

SHEET TITLE

BLDG A INTERIOR ELEVATIONS

SHEET NUMBER

A-A7.4

BIM Server: BIMCLOUD-QKA - BIMcloud/1739.00 - Freedom High School/1739.00 FREEDOM HS Performing Arts Center:8/6/2019 4:48 PM

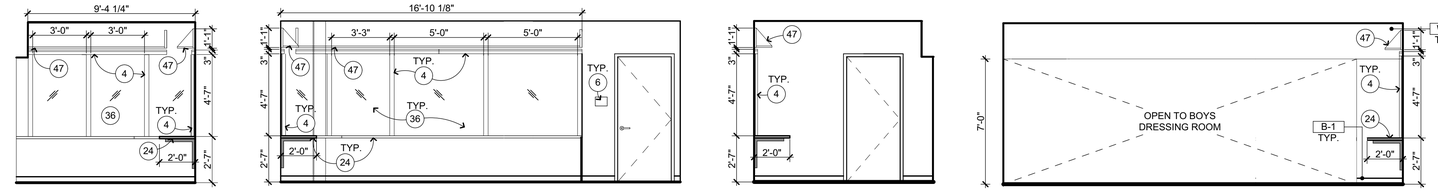

GIRLS DRESSING ROOM **111**

1/4" = 1'-0" A-A2.1

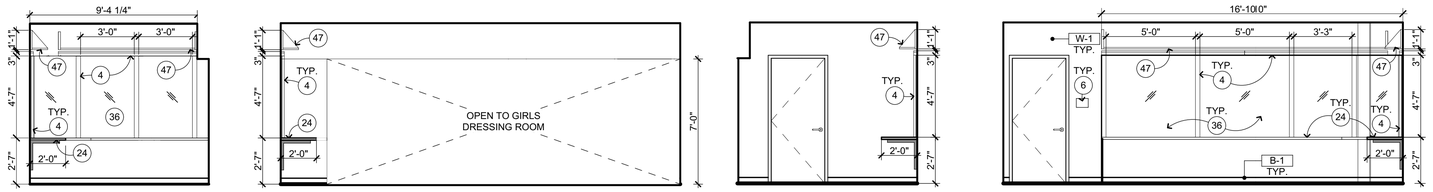

BOYS DRESSING ROOM **112**

1/4" = 1'-0" A-A2.1

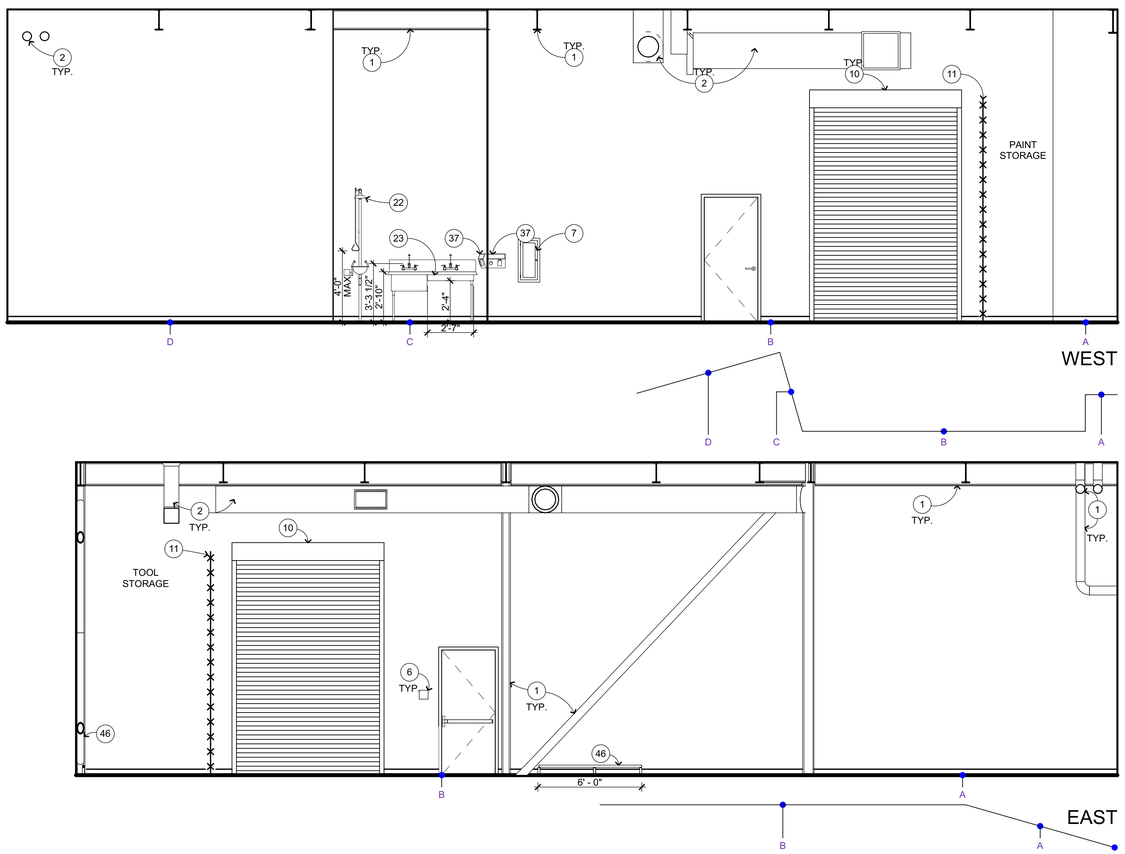

SET PREP **114**

1/4" = 1'-0" A-A2.1

INTERIOR ELEVATION KEYNOTES

NOT ALL KEYNOTES MAY APPLY TO THIS SHEET

1. STRUCTURAL ITEM, S.S.D.
2. MECHANICAL ITEM, S.M.D.
3. PLUMBING ITEM, S.P.D.
4. ELECTRICAL ITEM, S.E.D.
5. THEATRICAL ITEM, S.T.D.
6. SIGNAGE, SEE ARCHITECTURAL GRAPHICS PLAN
7. FIRE EXTINGUISHER, S.F.P.D. — 1 / A-10.1
8. SEMI RECESSED F.E.C., S.F.P.D. — 1 / A-10.2
9. RECESSED HOSE CABINET, S.F.P.D. — 4 / A-10.2
10. OVERHEAD DOOR — 2 / A-9.6
11. CHAINLINK FENCE AND GATE
12. EXTERIOR TICKETING WINDOW — 17 / A-9.5
13. ROLL UP COILING DOOR — 20 / A-9.5
14. FOLDING PARTITION
15. BULK HEAD
16. TENSION GRID, S.T.D. & S.S.D.
17. CATWALK, S.T.D. & S.S.D.
18. LIGHTING/EQUIPMENT GUARDRAILS, S.T.D. — 9 / A-9.17
19. GUARDRAILS, S.T.D. — 9 / A-9.17
20. HANDRAILS, S.T.D. — 2 / A-10.8
21. ACCESSIBLE HI-LO DRINKING FOUNTAIN W/ BOTTLE FILLER — 6 / A-10.1
22. EMERGENCY EYE WASH STATION
23. COMMERCIAL GRADE MOP SINK
24. DRESSING ROOM COUNTERTOP — 2 / A-10.6
25. TICKET COUNTERTOP — 4 / A-10.6
26. COSTUME SHELVES & POLE — 8 / A-10.7
27. TROPHY DISPLAY CASEWORK — 2 / A-10.7
28. AUDIO COUNTERTOP — 4 / A-10.6
29. CONTROL ROOM COUNTERTOP
30. TACK BOARD, SURFACE MOUNTED — 5 / A-10.2
31. CONCESSION COUNTERTOP
32. MARKER BOARD, SURFACE MOUNTED — 3 / A-10.1
33. MOTORIZED PROJECTION SCREEN — 7 / A-10.1
34. WALL MOUNTED SHORT THROW PROJECTOR, S.T.D. — 2 / AV-7.13; 1 / A-10.1
35. CEILING MOUNTED PROJECTOR, S.T.D. — 5 / AV-7.13
36. DRESSING ROOM MIRROR — 11 / A-10.1
37. ELECTRIC HAND DRYER
38. TOILET PARTITION — 9 / A-10.1
39. URINAL PARTITION — 9 / A-10.1
40. P-LAM FACED ACOUSTICAL WALL PANELS
41. LADDER — 18 / A-10.1
42. ACOUSTIC REFLECTORS
43. 1" THICK FABRIC WRAPPED ACOUSTICAL WALL PANELS
44. 2" THICK FABRIC WRAPPED ACOUSTICAL WALL PANELS
45. SUSPENDED ACOUSTIC CEILING, SEE REFLECTED CEILING PLAN
46. CANE RAIL — 9 / A-10.2
47. DRESSING ROOM SHELF
48. P-LAM WALL CAP TO MATCH ACOUSTIC REFLECTORS

INTERIOR ELEVATION GENERAL NOTES

1. NOTES AND SYMBOLS ARE TO APPLY AT ALL AREAS OF SIMILAR GRAPHI REPRESENTATION. SUCH INDICATIONS MAY BE LIMITED TO PROMOTE CLARITY OR AVOID REDUNDANCY. NO LIMITATION OF APPLICATION SHALL BE CONSTRUED WITHOUT SPECIFIC NOTATION.
2. REFER TO MECHANICAL DRAWINGS FOR REGISTERS AND VENTS NOT OTHERWISE SHOWN.
3. REFER TO ELECTRICAL DRAWINGS FOR HORNS, SPEAKERS, PULL STATIONS AND OTHER FEATURES NOT OTHERWISE SHOWN.
4. REFER TO THEATRICAL DRAWINGS FOR EQUIPMENTS AND OTHER FEATURES NOT OTHERWISE SHOWN.
5. TYPICAL MOUNTING HEIGHTS OF ACCESSIBLE ELEMENTS AT ACCESSIBLE FIXTURES SEE — 4 / A-10.1
6. FLUSH VALVE HANDLES SHALL BE LOCATED AT THE WIDE SIDE OF ACCESSIBLE STALL.
7. FLOORING & BASE SHALL EXTEND UNDER ACCESSIBLE SINK/LAVATORY BASE CABINETS TO THE WALL. HOT WATER AND DRAINPIPES ACCESSIBLE UNDER LAVATORIES SHALL BE INSULATED OR OTHERWISE COVERED. THERE SHALL BE NO SHARP OR ABRASIVE SURFACES UNDE LAVATORIES.
8. PROVIDE SOLID BLOCKING FOR CABINET, ACCESSORY, OR EQUIPMENT MOUNTING

WALL AND BASE FINISH CODES

NOT ALL CODES MAY APPLY TO THIS SHEET, SEE FINISH & COLOR SCHEDU

W-1	PAINTED GYP. BD. TYP.	B-1	4" COVED RUBBER BASE TYP.
W-2	PAINTED GYP. BD. TO MATCH STUCCO (DARK)	B-2	4" VENTED RUBBER BASE
W-3	PAINTED GYP. BD. TO MATCH STUCCO (LIGHT)	B-3	SHEET VINYL BASE
W-4	METAL PANELS (BLUE)	B-4	FLUID APPLIED EPOXY
W-5	TILE TYP.		
W-6	ACOUSTIC PANELS		
W-7	FIBER REINFORCED PANELS		
W-8	PAINTED GYP. BD. TO MATCH CEILING CL-7		
W-9	FRP PANEL		

LEGEND

- - - - - TYPICAL WALL CORNERLINE (SEE FLOOR PLAN)

SCHEMATIC WALL (PLAN VIEW) - BEND AT WALL CORNERLINE REPRESENTED ALPHABETICALLY. INTERIOR ELEVATIONS SHOWS WALL IN FLATTENED STATE. NOTE, SCHEMATIC WALL DRAWN AT HALF SCALE U.N.O.

QUATTROCCHI KWOK ARCHITECTS

Main Office:
636 Fifth Street, Santa Rosa, CA 95404
Pleasanton Office:
600 Main Street, Suite E,
Pleasanton, CA 94566
(707) 576-0829

LICENSED ARCHITECT
JIM THEISS
LICENSE # C22643
EXP JUNE 30, 2021
STATE OF CALIFORNIA

SIGNED: AUGUST 13, 2019

FREEDOM HIGH SCHOOL

PERFORMING ARTS AND CTE FACILITIES

1050 NEROLY RD,
OAKLEY, CA 94561

LIBERTY UNION HIGH SCHOOL DISTRICT

ARCH PROJECT NO: 1739.00
DRAWN BY:
DRAWING SCALE:
PTN: 61721-0068

BID SET

AUGUST 13, 2019

SHEET TITLE

BLDG A INTERIOR ELEVATIONS

SHEET NUMBER

A-A7.5

BIM Server: BIMCLOUD-QKA - BIMcloud/1739.00 - Freedom High School/1739.00 FREEDOM HS Performing Arts Center.8/6/2019 4:49 PM

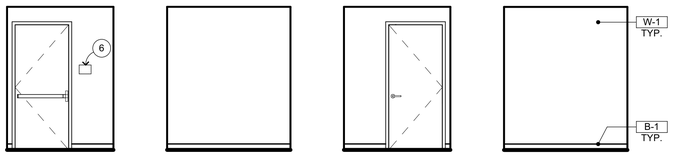

EAST SOUTH WEST NORTH

LIGHT LOCK **116**

1/4" = 1'-0" A-A2.1

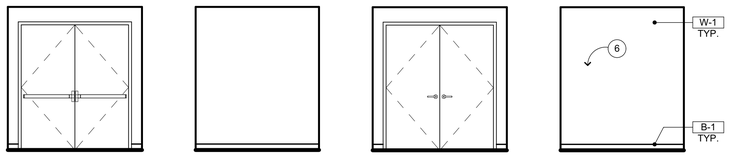

EAST SOUTH WEST NORTH

LIGHT LOCK **115**

1/4" = 1'-0" A-A2.1



WEST

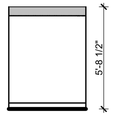

NORTH



EAST

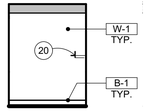

SOUTH

ORCHESTRA PIT **118**

1/4" = 1'-0" A-A2.1

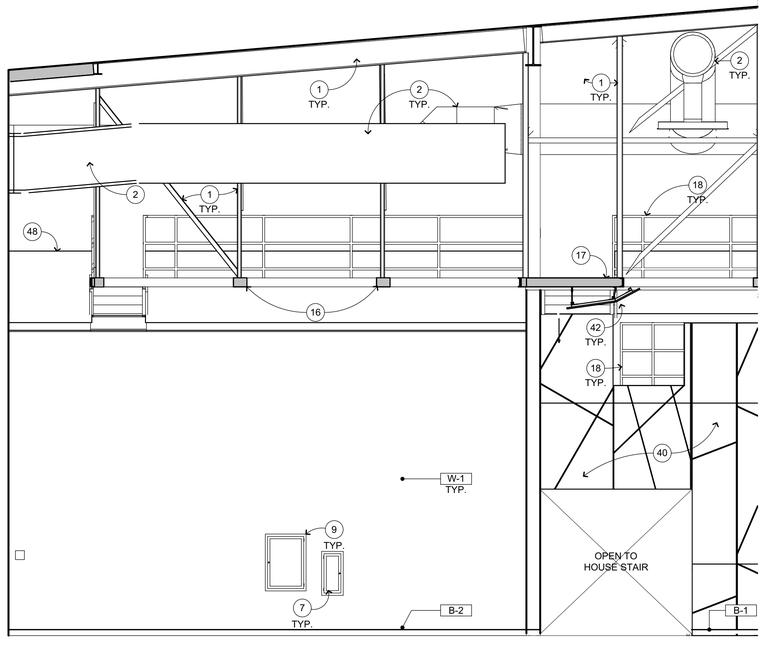

SOUTH

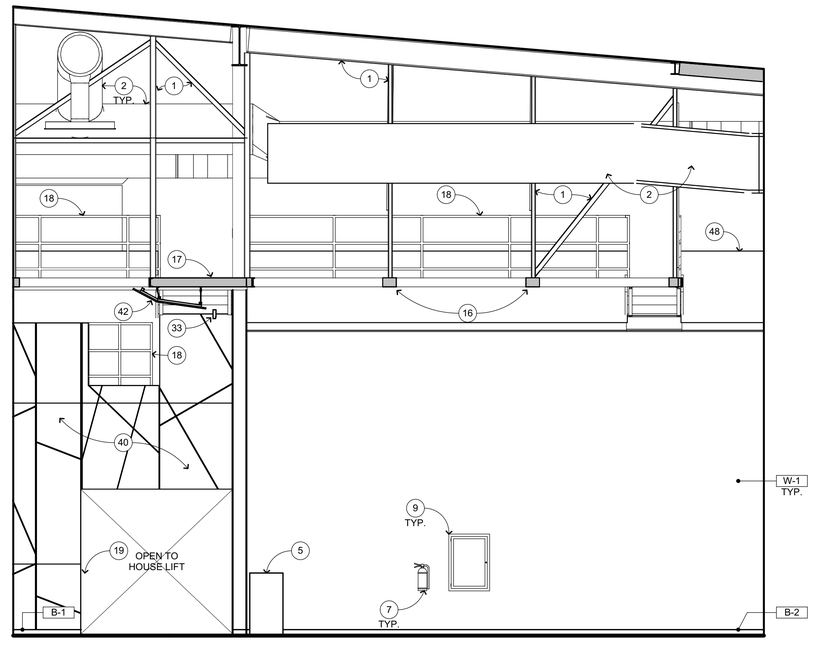

NORTH

STAGE **117**

1/4" = 1'-0" A-A2.1

INTERIOR ELEVATION KEYNOTES

NOT ALL KEYNOTES MAY APPLY TO THIS SHEET

1. STRUCTURAL ITEM, S.S.D.
2. MECHANICAL ITEM, S.M.D.
3. PLUMBING ITEM, S.P.D.
4. ELECTRICAL ITEM, S.E.D.
5. THEATRICAL ITEM, S.T.D.
6. SIGNAGE, SEE ARCHITECTURAL GRAPHICS PLAN
7. FIRE EXTINGUISHER, S.F.P.D. → 1 / A-10.1
8. SEMI RECESSED F.E.C., S.F.P.D. → 1 / A-10.2
9. RECESSED HOSE CABINET, S.F.P.D. → 4 / A-10.2
10. OVERHEAD DOOR → 2 / A-9.6
11. CHAINLINK FENCE AND GATE
12. EXTERIOR TICKETING WINDOW → 17 / A-9.5
13. ROLL UP COILING DOOR → 20 / A-9.5
14. FOLDING PARTITION
15. BULK HEAD
16. TENSION GRID, S.T.D. & S.S.D.
17. CATWALK, S.T.D. & S.S.D.
18. LIGHTING/EQUIPMENT GUARDRAILS, S.T.D. → 9 / A-9.17
19. GUARDRAILS, S.T.D. → 9 / A-9.17
20. HANDRAILS, S.T.D. → 2 / A-10.8
21. ACCESSIBLE HI-LO DRINKING FOUNTAIN W/ BOTTLE FILLER → 6 / A-10.1
22. EMERGENCY EYE WASH STATION
23. COMMERCIAL GRADE MOP SINK
24. DRESSING ROOM COUNTERTOP → 2 / A-10.6
25. TICKET COUNTERTOP → 4 / A-10.6
26. COSTUME SHELVES & POLE → 8 / A-10.7
27. TROPHY DISPLAY CASEWORK → 2 / A-10.7
28. AUDIO COUNTERTOP → 4 / A-10.6
29. CONTROL ROOM COUNTERTOP
30. TACK BOARD, SURFACE MOUNTED → 5 / A-10.2
31. CONCESSION COUNTERTOP
32. MARKER BOARD, SURFACE MOUNTED → 3 / A-10.1
33. MOTORIZED PROJECTION SCREEN → 7 / A-10.1
34. WALL MOUNTED SHORT THROW PROJECTOR, S.T.D. → 2 / AV-7.13, 1 / A-10.1
35. CEILING MOUNTED PROJECTOR, S.T.D. → 5 / AV-7.13
36. DRESSING ROOM MIRROR → 11 / A-10.1
37. ELECTRIC HAND DRYER
38. TOILET PARTITION → 9 / A-10.1
39. URINAL PARTITION → 9 / A-10.1
40. P-LAM FACED ACOUSTICAL WALL PANELS → 18 / A-10.1
41. LADDER
42. ACOUSTIC REFLECTORS
43. 1" THICK FABRIC WRAPPED ACOUSTICAL WALL PANELS
44. 2" THICK FABRIC WRAPPED ACOUSTICAL WALL PANELS
45. SUSPENDED ACOUSTIC CEILING, SEE REFLECTED CEILING PLAN
46. CANE RAIL → 9 / A-10.2
47. DRESSING ROOM SHELF
48. P-LAM WALL CAP TO MATCH ACOUSTIC REFLECTORS

INTERIOR ELEVATION GENERAL NOTES

1. NOTES AND SYMBOLS ARE TO APPLY AT ALL AREAS OF SIMILAR GRAPHI REPRESENTATION. SUCH INDICATIONS MAY BE LIMITED TO PROMOTE CLARITY OR AVOID REDUNDANCY. NO LIMITATION OF APPLICATION SHALL BE CONSTRUED WITHOUT SPECIFIC NOTATION.
2. REFER TO MECHANICAL DRAWINGS FOR REGISTERS AND VENTS NOT OTHERWISE SHOWN.
3. REFER TO ELECTRICAL DRAWINGS FOR HORNS, SPEAKERS, PULL STATIONS AND OTHER FEATURES NOT OTHERWISE SHOWN.
4. REFER TO THEATRICAL DRAWINGS FOR EQUIPMENTS AND OTHER FEATURES NOT OTHERWISE SHOWN.
5. TYPICAL MOUNTING HEIGHTS OF ACCESSIBLE ELEMENTS AT ACCESSIBLE FIXTURES SEE → 4 / A-10.1
6. FLUSH VALVE HANDLES SHALL BE LOCATED AT THE WIDE SIDE OF ACCESSIBLE STALL.
7. FLOORING & BASE SHALL EXTEND UNDER ACCESSIBLE SINK/LAVATORY BASE CABINETS TO THE WALL. HOT WATER AND DRAINPIPES ACCESSIBLE UNDER LAVATORIES SHALL BE INSULATED OR OTHERWISE COVERED. THERE SHALL BE NO SHARP OR ABRASIVE SURFACES UNDE LAVATORIES.
8. PROVIDE SOLID BLOCKING FOR CABINET, ACCESSORY, OR EQUIPMENT MOUNTING

WALL AND BASE FINISH CODES

NOT ALL CODES MAY APPLY TO THIS SHEET, SEE FINISH & COLOR SCHEDU

W-1	PAINTED GYP. BD. TYP.	B-1	4" COVED RUBBER BASE TYP.
W-2	PAINTED GYP. BD. TO MATCH STUCCO (DARK)	B-2	4" VENTED RUBBER BASE
W-3	PAINTED GYP. BD. TO MATCH STUCCO (LIGHT)	B-3	SHEET VINYL BASE
W-4	METAL PANELS (BLUE)	B-4	FLUID APPLIED EPOXY
W-5	TILE TYP.		
W-6	ACOUSTIC PANELS		
W-7	FIBER REINFORCED PANELS		
W-8	PAINTED GYP. BD. TO MATCH CEILING CL-7		
W-9	FRP PANEL		

LEGEND

- - - - - TYPICAL WALL CORNERLINE (SEE FLOOR PLAN)

SCHEMATIC WALL (PLAN VIEW) - BEND AT WALL CORNERLINE REPRESENTED ALPHABETICALLY. INTERIOR ELEVATIONS SHOWS WALL IN FLATTENED STATE. NOTE, SCHEMATIC WALL DRAWN AT HALF SCALE U.N.O.

QUATTROCCHI KWOK ARCHITECTS

Main Office:
636 Fifth Street, Santa Rosa, CA 95404
Pleasanton Office:
600 Main Street, Suite E,
Pleasanton, CA 94566
(707) 576-0829

LICENSED ARCHITECT
JIM THEISS
LICENSE # C22643
EXP JUNE 30, 2021
STATE OF CALIFORNIA

SIGNED: AUGUST 13, 2019

FREEDOM HIGH SCHOOL

PERFORMING ARTS AND CTE FACILITIES

1050 NEROLY RD,
OAKLEY, CA 94561

LIBERTY UNION HIGH SCHOOL DISTRICT

ARCH PROJECT NO: 1739.00
DRAWN BY:
DRAWING SCALE:
PTN: 61721-0068

BID SET

AUGUST 13, 2019

SHEET TITLE

BLDG A INTERIOR ELEVATIONS

SHEET NUMBER

A-A7.6

BIM Server: BIMCLOUD-QKA - BIMcloud/1739.00 - Freedom High School/1739.00 FREEDOM HS Performing Arts Center-8/6/2019 4:50 PM

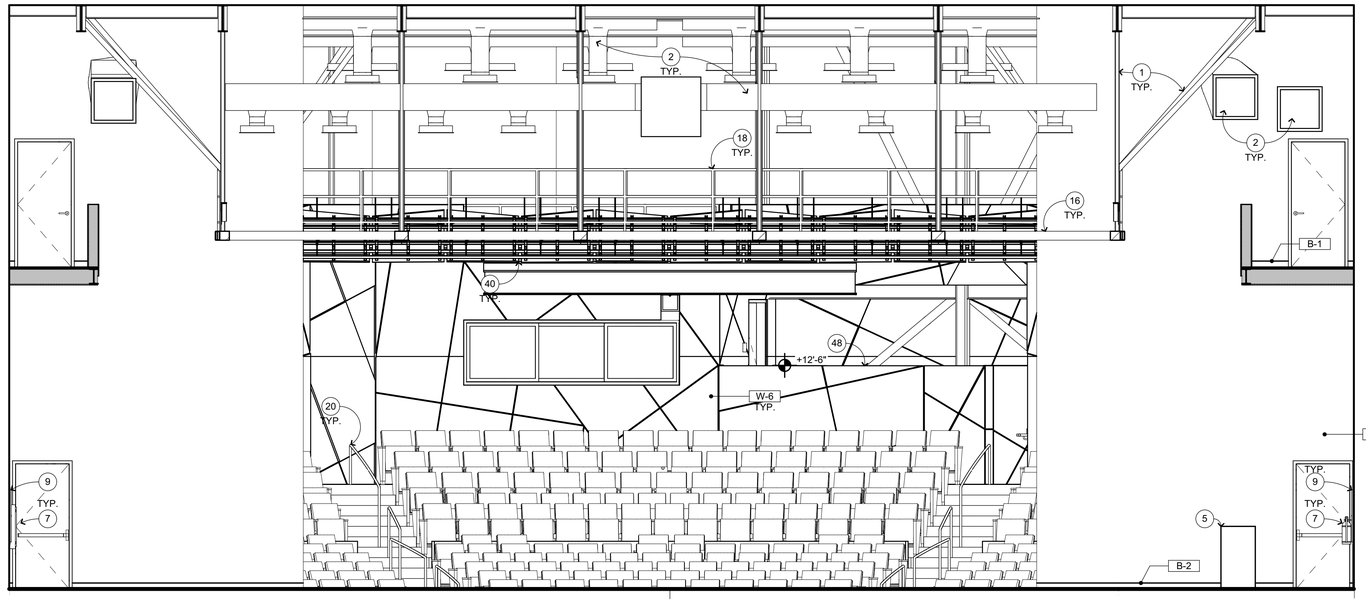

WEST

STAGE 117

1/4" = 1'-0" A-A2.1

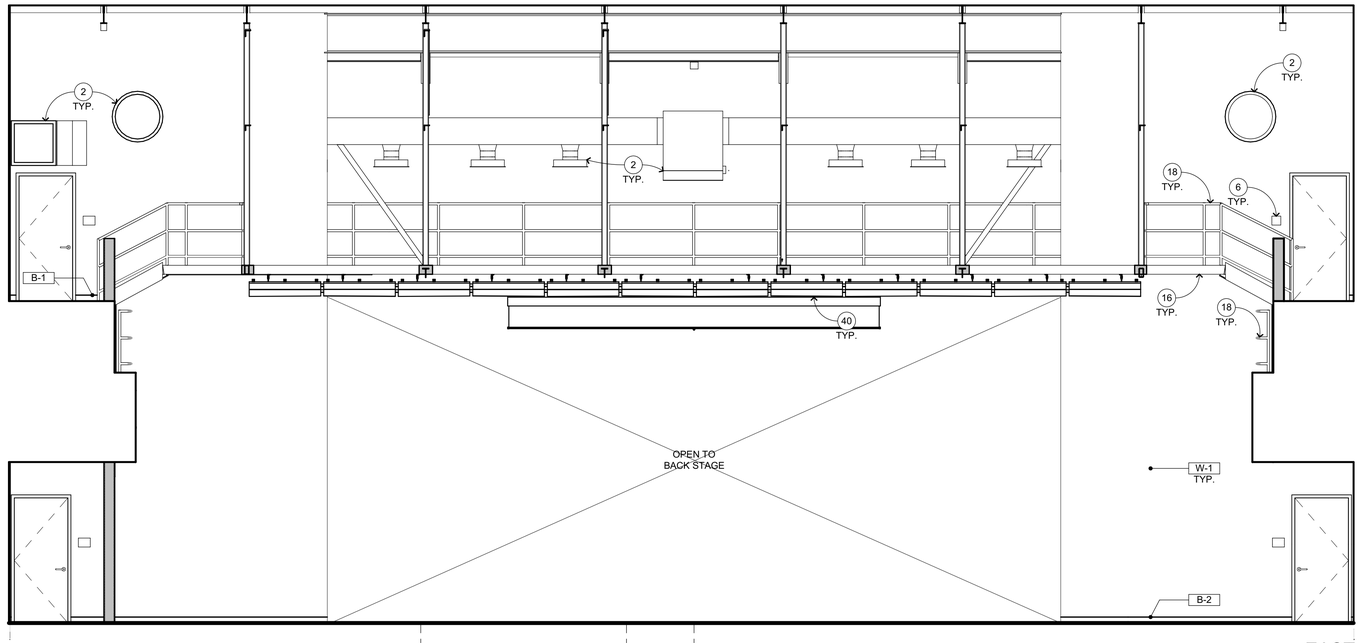

EAST

STAGE 117

1/4" = 1'-0" A-A2.1

INTERIOR ELEVATION KEYNOTES

NOT ALL KEYNOTES MAY APPLY TO THIS SHEET

1. STRUCTURAL ITEM, S.S.D.
2. MECHANICAL ITEM, S.M.D.
3. PLUMBING ITEM, S.P.D.
4. ELECTRICAL ITEM, S.E.D.
5. THEATRICAL ITEM, S.T.D.
6. SIGNAGE, SEE ARCHITECTURAL GRAPHICS PLAN
7. FIRE EXTINGUISHER, S.F.P.D. — 1 A-10.1
8. SEMI RECESSED F.E.C., S.F.P.D. — 1 A-10.2
9. RECESSED HOSE CABINET, S.F.P.D. — 4 A-10.2
10. OVERHEAD DOOR — 2 A-9.6
11. CHAINLINK FENCE AND GATE
12. EXTERIOR TICKETING WINDOW — 17 A-9.5
13. ROLL UP COILING DOOR — 20 A-9.5
14. FOLDING PARTITION
15. BULK HEAD
16. TENSION GRID, S.T.D. & S.S.D.
17. CATWALK, S.T.D. & S.S.D.
18. LIGHTING/EQUIPMENT GUARDRAILS, S.T.D. — 9 A-9.17
19. GUARDRAILS, S.T.D. — 9 A-9.17
20. HANDRAILS, S.T.D. — 2 A-10.8
21. ACCESSIBLE HI-LO DRINKING FOUNTAIN W/ BOTTLE FILLER — 6 A-10.1
22. EMERGENCY EYE WASH STATION
23. COMMERCIAL GRADE MOP SINK
24. DRESSING ROOM COUNTERTOP — 2 A-10.6
25. TICKET COUNTERTOP — 4 A-10.6
26. COSTUME SHELVES & POLE — 8 A-10.7
27. TROPHY DISPLAY CASEWORK — 2 A-10.7
28. AUDIO COUNTERTOP — 4 A-10.6
29. CONTROL ROOM COUNTERTOP
30. TACK BOARD, SURFACE MOUNTED — 5 A-10.2
31. CONCESSION COUNTERTOP
32. MARKER BOARD, SURFACE MOUNTED — 3 A-10.1
33. MOTORIZED PROJECTION SCREEN — 7 A-10.1
34. WALL MOUNTED SHORT THROW PROJECTOR, S.T.D. — 2 AV-7.13, 1 A-10.1
35. CEILING MOUNTED PROJECTOR, S.T.D. — 5 AV-7.13
36. DRESSING ROOM MIRROR — 11 A-10.1
37. ELECTRIC HAND DRYER
38. TOILET PARTITION — 9 A-10.1
39. URINAL PARTITION — 9 A-10.1
40. P-LAM FACED ACOUSTICAL WALL PANELS — 18 A-10.1
41. LADDER
42. ACOUSTIC REFLECTORS
43. 1" THICK FABRIC WRAPPED ACOUSTICAL WALL PANELS
44. 2" THICK FABRIC WRAPPED ACOUSTICAL WALL PANELS
45. SUSPENDED ACOUSTIC CEILING, SEE REFLECTED CEILING PLAN
46. CANE RAIL — 9 A-10.2
47. DRESSING ROOM SHELF
48. P-LAM WALL CAP TO MATCH ACOUSTIC REFLECTORS

INTERIOR ELEVATION GENERAL NOTES

1. NOTES AND SYMBOLS ARE TO APPLY AT ALL AREAS OF SIMILAR GRAPHI REPRESENTATION. SUCH INDICATIONS MAY BE LIMITED TO PROMOTE CLARITY OR AVOID REDUNDANCY. NO LIMITATION OF APPLICATION SHALL BE CONSTRUED WITHOUT SPECIFIC NOTATION.
2. REFER TO MECHANICAL DRAWINGS FOR REGISTERS AND VENTS NOT OTHERWISE SHOWN.
3. REFER TO ELECTRICAL DRAWINGS FOR HORNS, SPEAKERS, PULL STATIONS AND OTHER FEATURES NOT OTHERWISE SHOWN.
4. REFER TO THEATRICAL DRAWINGS FOR EQUIPMENTS AND OTHER FEATURES NOT OTHERWISE SHOWN.
5. TYPICAL MOUNTING HEIGHTS OF ACCESSIBLE ELEMENTS AT ACCESSIBLE FIXTURES SEE — 4 A-10.1
6. FLUSH VALVE HANDLES SHALL BE LOCATED AT THE WIDE SIDE OF ACCESSIBLE STALL.
7. FLOORING & BASE SHALL EXTEND UNDER ACCESSIBLE SINK/LAVATORY BASE CABINETS TO THE WALL. HOT WATER AND DRAINPIPES ACCESSIBLE UNDER LAVATORIES SHALL BE INSULATED OR OTHERWISE COVERED. THERE SHALL BE NO SHARP OR ABRASIVE SURFACES UNDE LAVATORIES.
8. PROVIDE SOLID BLOCKING FOR CABINET, ACCESSORY, OR EQUIPMENT MOUNTING

WALL AND BASE FINISH CODES

NOT ALL CODES MAY APPLY TO THIS SHEET, SEE FINISH & COLOR SCHEDU

W-1	PAINTED GYP. BD. TYP.	B-1	4" COVED RUBBER BASE TYP.
W-2	PAINTED GYP. BD. TO MATCH STUCCO (DARK)	B-2	4" VENTED RUBBER BASE
W-3	PAINTED GYP. BD. TO MATCH STUCCO (LIGHT)	B-3	SHEET VINYL BASE
W-4	METAL PANELS (BLUE)	B-4	FLUID APPLIED EPOXY
W-5	TILE TYP.		
W-6	ACOUSTIC PANELS		
W-7	FIBER REINFORCED PANELS		
W-8	PAINTED GYP. BD. TO MATCH CEILING CL-7		
W-9	FRP PANEL		

LEGEND

- TYPICAL WALL CORNERLINE (SEE FLOOR PLAN)
- SCHEMATIC WALL (PLAN VIEW) - BEND AT WALL CORNERLINE REPRESENTED ALPHABETICALLY. INTERIOR ELEVATIONS SHOWS WALL IN FLATTENED STATE. NOTE, SCHEMATIC WALL DRAWN AT HALF SCALE U.N.O.

QUATTROCCHI KWOK ARCHITECTS
Main Office:
636 Fifth Street, Santa Rosa, CA 95404
Pleasanton Office:
600 Main Street, Suite E,
Pleasanton, CA 94566
(707) 576-0829

LICENSED ARCHITECT
JIM THEISS
LICENSE # C22643
EXP JUNE 30, 2021
STATE OF CALIFORNIA

SIGNED: AUGUST 13, 2019

FREEDOM HIGH SCHOOL

PERFORMING ARTS AND CTE FACILITIES

1050 NEROLY RD,
OAKLEY, CA 94561

LIBERTY UNION HIGH SCHOOL DISTRICT

ARCH PROJECT NO:	1739.00
DRAWN BY:	
DRAWING SCALE:	
PTN:	61721-0068

BID SET

AUGUST 13, 2019

SHEET TITLE

BLDG A INTERIOR ELEVATIONS

SHEET NUMBER

A-A7.7

BIM Server: BIMCLOUD-QKA - BIMcloud/1739.00 - Freedom High School/1739.00 FREEDOM HS Performing Arts Center-8/6/2019 4:50 PM

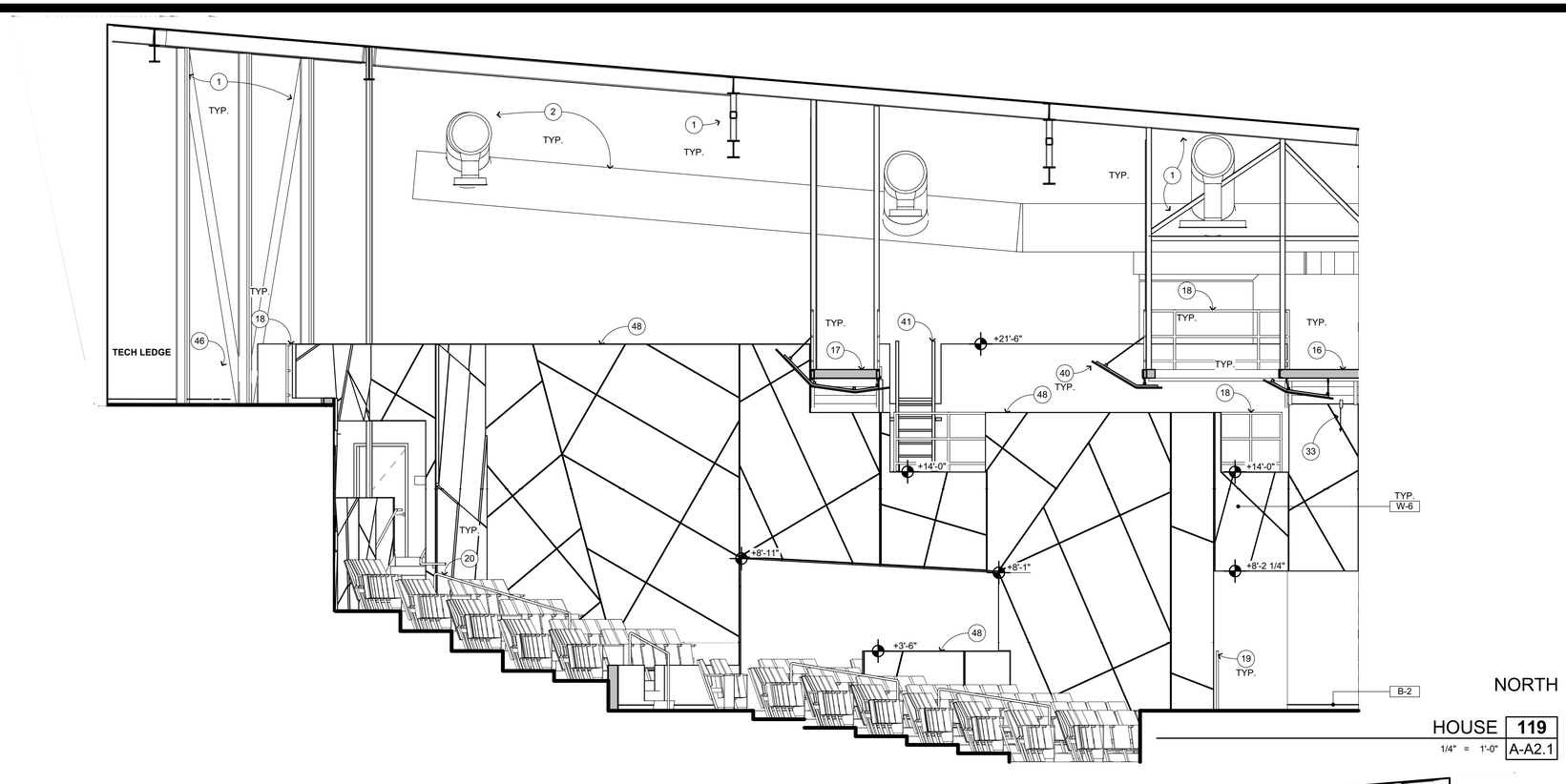

NORTH

HOUSE 119

1/4" = 1'-0" A-A2.1

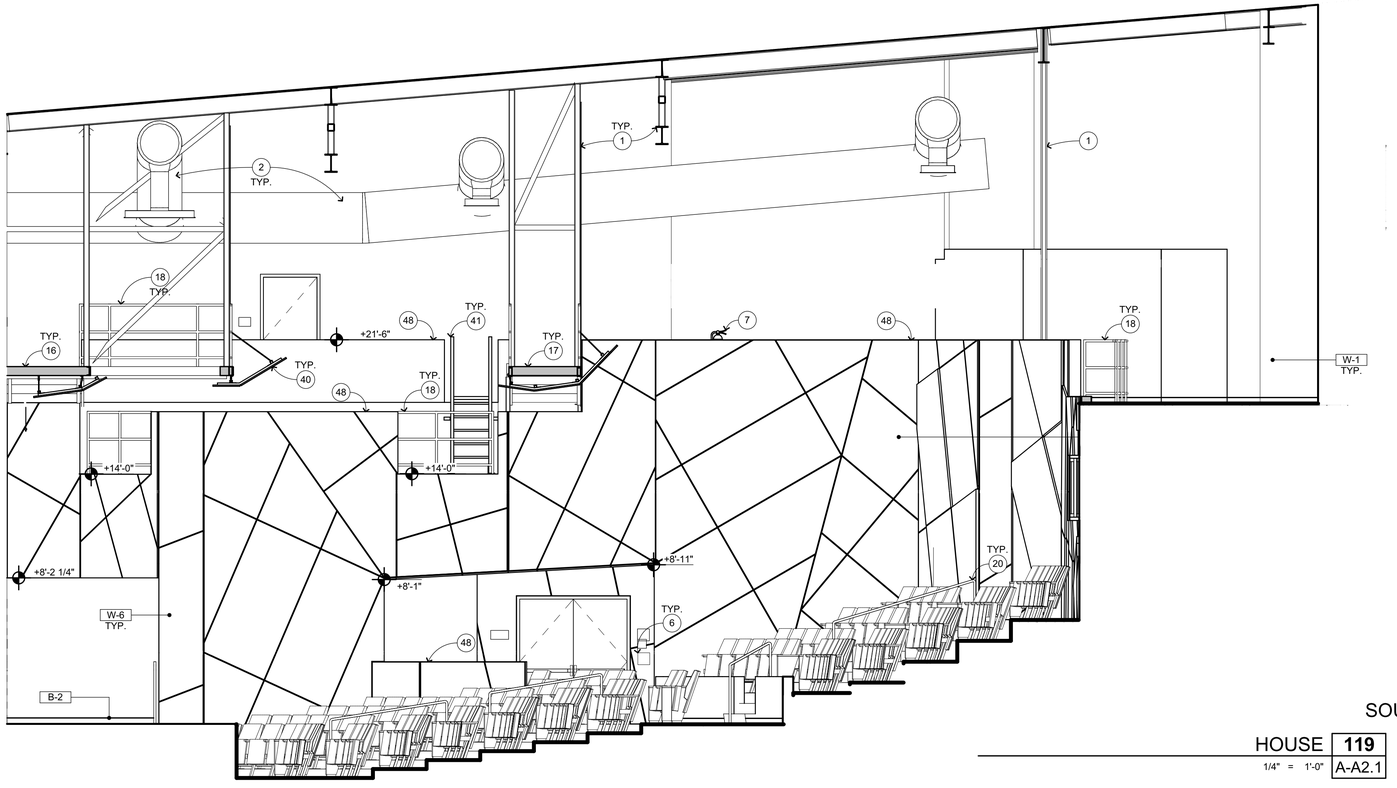

SOUTH

HOUSE 119

1/4" = 1'-0" A-A2.1

INTERIOR ELEVATION KEYNOTES

NOT ALL KEYNOTES MAY APPLY TO THIS SHEET

1. STRUCTURAL ITEM, S.S.D.
2. MECHANICAL ITEM, S.M.D.
3. PLUMBING ITEM, S.P.D.
4. ELECTRICAL ITEM, S.E.D.
5. THEATRICAL ITEM, S.T.D.
6. SIGNAGE, SEE ARCHITECTURAL GRAPHICS PLAN
7. FIRE EXTINGUISHER, S.F.P.D. — 1 / A-10.1
8. SEMI RECESSED F.E.C., S.F.P.D. — 1 / A-10.2
9. RECESSED HOSE CABINET, S.F.P.D. — 4 / A-10.2
10. OVERHEAD DOOR — 2 / A-9.6
11. CHAINLINK FENCE AND GATE
12. EXTERIOR TICKETING WINDOW — 17 / A-9.5
13. ROLL UP COILING DOOR — 20 / A-9.5
14. FOLDING PARTITION
15. BULK HEAD
16. TENSION GRID, S.T.D. & S.S.D.
17. CATWALK, S.T.D. & S.S.D.
18. LIGHTING/EQUIPMENT GUARDRAILS, S.T.D. — 9 / A-9.17
19. GUARDRAILS, S.T.D. — 9 / A-9.17
20. HANDRAILS, S.T.D. — 2 / A-10.8
21. ACCESSIBLE HI-LO DRINKING FOUNTAIN W/ BOTTLE FILLER — 6 / A-10.1
22. EMERGENCY EYE WASH STATION
23. COMMERCIAL GRADE MOP SINK
24. DRESSING ROOM COUNTERTOP — 2 / A-10.6
25. TICKET COUNTERTOP — 4 / A-10.6
26. COSTUME SHELVES & POLE — 8 / A-10.7
27. TROPHY DISPLAY CASEWORK — 2 / A-10.7
28. AUDIO COUNTERTOP — 4 / A-10.6
29. CONTROL ROOM COUNTERTOP
30. TACK BOARD, SURFACE MOUNTED — 5 / A-10.2
31. CONCESSION COUNTERTOP
32. MARKER BOARD, SURFACE MOUNTED — 3 / A-10.1
33. MOTORIZED PROJECTION SCREEN — 7 / A-10.1
34. WALL MOUNTED SHORT THROW PROJECTOR, S.T.D. — 2 / AV-7.13, 1 / A-10.1
35. CEILING MOUNTED PROJECTOR, S.T.D. — 5 / AV-7.13
36. DRESSING ROOM MIRROR — 11 / A-10.1
37. ELECTRIC HAND DRYER
38. TOILET PARTITION — 9 / A-10.1
39. URINAL PARTITION — 9 / A-10.1
40. P-LAM FACED ACOUSTICAL WALL PANELS
41. LADDER — 18 / A-10.1
42. ACOUSTIC REFLECTORS
43. 1" THICK FABRIC WRAPPED ACOUSTICAL WALL PANELS
44. 2" THICK FABRIC WRAPPED ACOUSTICAL WALL PANELS
45. SUSPENDED ACOUSTIC CEILING, SEE REFLECTED CEILING PLAN
46. CANE RAIL — 9 / A-10.2
47. DRESSING ROOM SHELF
48. P-LAM WALL CAP TO MATCH ACOUSTIC REFLECTORS

INTERIOR ELEVATION GENERAL NOTES

1. NOTES AND SYMBOLS ARE TO APPLY AT ALL AREAS OF SIMILAR GRAPHI REPRESENTATION. SUCH INDICATIONS MAY BE LIMITED TO PROMOTE CLARITY OR AVOID REDUNDANCY. NO LIMITATION OF APPLICATION SHALL BE CONSTRUED WITHOUT SPECIFIC NOTATION.
2. REFER TO MECHANICAL DRAWINGS FOR REGISTERS AND VENTS NOT OTHERWISE SHOWN.
3. REFER TO ELECTRICAL DRAWINGS FOR HORNS, SPEAKERS, PULL STATIONS AND OTHER FEATURES NOT OTHERWISE SHOWN.
4. REFER TO THEATRICAL DRAWINGS FOR EQUIPMENTS AND OTHER FEATURES NOT OTHERWISE SHOWN.
5. TYPICAL MOUNTING HEIGHTS OF ACCESSIBLE ELEMENTS AT ACCESSIBLE FIXTURES SEE — 4 / A-10.1
6. FLUSH VALVE HANDLES SHALL BE LOCATED AT THE WIDE SIDE OF ACCESSIBLE STALL.
7. FLOORING & BASE SHALL EXTEND UNDER ACCESSIBLE SINK/LAVATORY BASE CABINETS TO THE WALL. HOT WATER AND DRAINPIPES ACCESSIBLE UNDER LAVATORIES SHALL BE INSULATED OR OTHERWISE COVERED. THERE SHALL BE NO SHARP OR ABRASIVE SURFACES UNDE LAVATORIES.
8. PROVIDE SOLID BLOCKING FOR CABINET, ACCESSORY, OR EQUIPMENT MOUNTING

WALL AND BASE FINISH CODES

NOT ALL CODES MAY APPLY TO THIS SHEET, SEE FINISH & COLOR SCHEDU

W-1	PAINTED GYP. BD. TYP.	B-1	4" COVED RUBBER BASE TYP.
W-2	PAINTED GYP. BD. TO MATCH STUCCO (DARK)	B-2	4" VENTED RUBBER BASE
W-3	PAINTED GYP. BD. TO MATCH STUCCO (LIGHT)	B-3	SHEET VINYL BASE
W-4	METAL PANELS (BLUE)	B-4	FLUID APPLIED EPOXY
W-5	TILE TYP.		
W-6	ACOUSTIC PANELS		
W-7	FIBER REINFORCED PANELS		
W-8	PAINTED GYP. BD. TO MATCH CEILING CL-7		
W-9	FRP PANEL		

LEGEND

- TYPICAL WALL CORNERLINE (SEE FLOOR PLAN)
- SCHEMATIC WALL (PLAN VIEW) - BEND AT WALL CORNERLINE REPRESENTED ALPHABETICALLY. INTERIOR ELEVATIONS SHOWS WALL IN FLATTENED STATE. NOTE, SCHEMATIC WALL DRAWN AT HALF SCALE U.N.O.

QUATTROCCHI KWOK ARCHITECTS
Main Office:
636 Fifth Street, Santa Rosa, CA 95404
Pleasanton Office:
600 Main Street, Suite E,
Pleasanton, CA 94566
(707) 576-0829

LICENSED ARCHITECT
JIM THEISS
LICENSE # C22643
EXP JUNE 30, 2021
STATE OF CALIFORNIA

SIGNED: AUGUST 13, 2019

FREEDOM HIGH SCHOOL

PERFORMING ARTS AND CTE FACILITIES

1050 NEROLY RD,
OAKLEY, CA 94561

LIBERTY UNION HIGH SCHOOL DISTRICT

ARCH PROJECT NO: 1739.00
DRAWN BY:
DRAWING SCALE:
PTN: 61721-0068

BID SET

AUGUST 13, 2019

SHEET TITLE

BLDG A INTERIOR ELEVATIONS

SHEET NUMBER

A-A7.8

BIM Server: BIMCLOUD-QKA - BIMcloud/1739.00 - Freedom High School/1739.00 FREEDOM HS Performing Arts Center:8/6/2019 4:50 PM

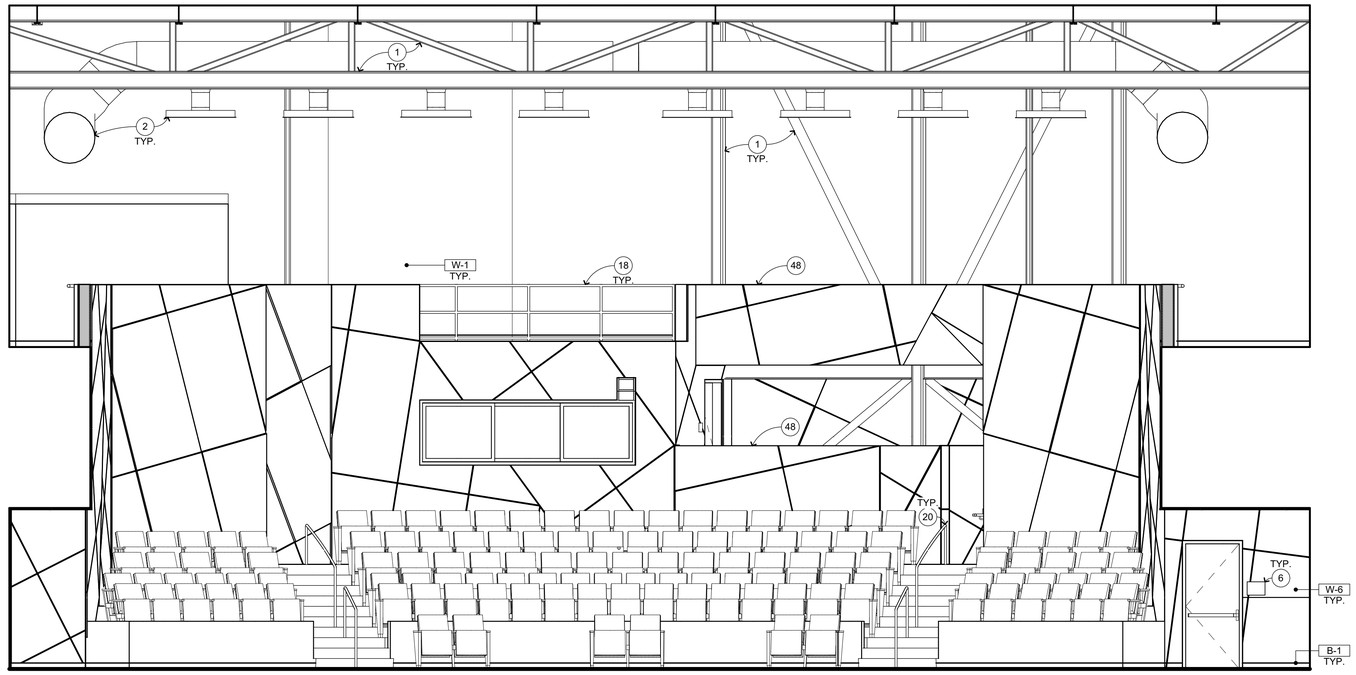

WEST

HOUSE 119

1/4" = 1'-0" A-A2.1

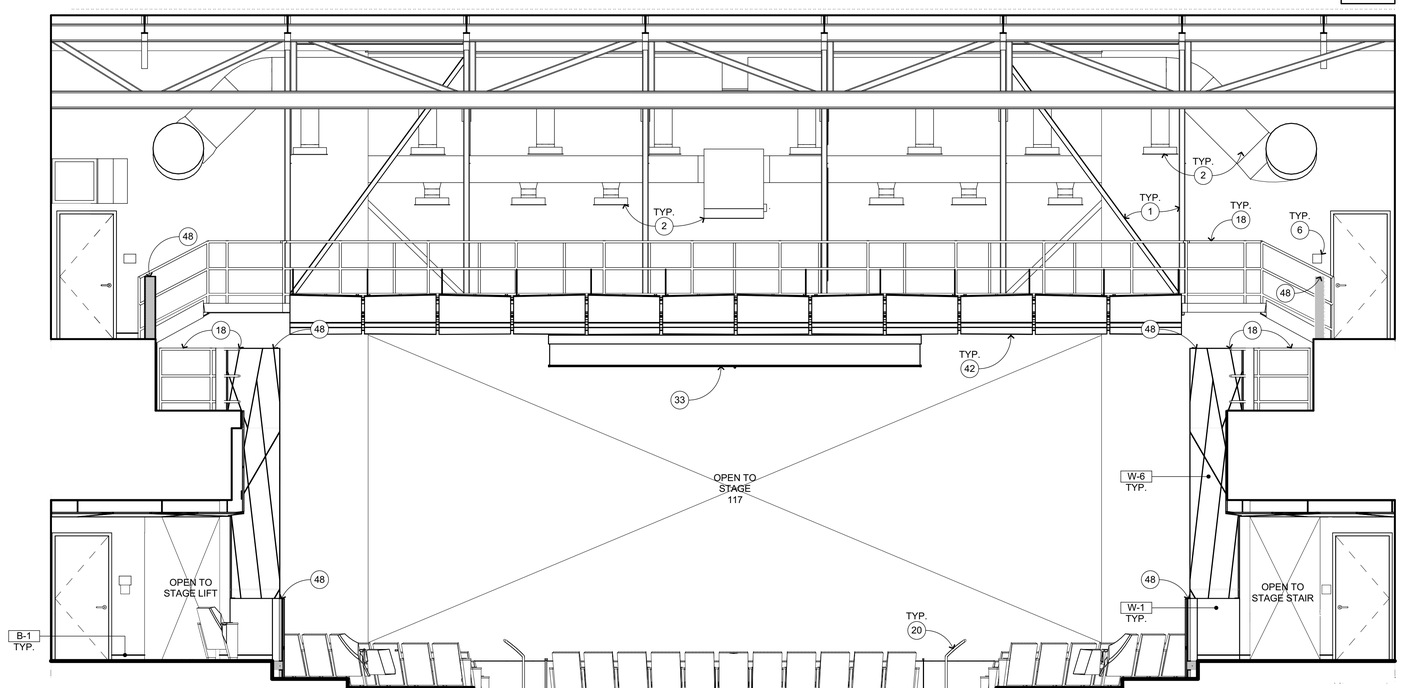

EAST

HOUSE 119

1/4" = 1'-0" A-A2.1

INTERIOR ELEVATION KEYNOTES

NOT ALL KEYNOTES MAY APPLY TO THIS SHEET

1. STRUCTURAL ITEM, S.S.D.
2. MECHANICAL ITEM, S.M.D.
3. PLUMBING ITEM, S.P.D.
4. ELECTRICAL ITEM, S.E.D.
5. THEATRICAL ITEM, S.T.D.
6. SIGNAGE, SEE ARCHITECTURAL GRAPHICS PLAN
7. FIRE EXTINGUISHER, S.F.P.D. — 1 / A-10.1
8. SEMI RECESSED F.E.C., S.F.P.D. — 1 / A-10.2
9. RECESSED HOSE CABINET, S.F.P.D. — 4 / A-10.2
10. OVERHEAD DOOR — 2 / A-9.6
11. CHAINLINK FENCE AND GATE
12. EXTERIOR TICKETING WINDOW — 17 / A-9.5
13. ROLL UP COILING DOOR — 20 / A-9.5
14. FOLDING PARTITION
15. BULK HEAD
16. TENSION GRID, S.T.D. & S.S.D.
17. CATWALK, S.T.D. & S.S.D.
18. LIGHTING/EQUIPMENT GUARDRAILS, S.T.D. — 9 / A-9.17
19. GUARDRAILS, S.T.D. — 9 / A-9.17
20. HANDRAILS, S.T.D. — 2 / A-10.8
21. ACCESSIBLE HI-LO DRINKING FOUNTAIN W/ BOTTLE FILLER — 6 / A-10.1
22. EMERGENCY EYE WASH STATION
23. COMMERCIAL GRADE MOP SINK
24. DRESSING ROOM COUNTERTOP — 2 / A-10.6
25. TICKET COUNTERTOP — 4 / A-10.6
26. COSTUME SHELVES & POLE — 8 / A-10.7
27. TROPHY DISPLAY CASEWORK — 2 / A-10.7
28. AUDIO COUNTERTOP — 4 / A-10.6
29. CONTROL ROOM COUNTERTOP
30. TACK BOARD, SURFACE MOUNTED — 5 / A-10.2
31. CONCESSION COUNTERTOP
32. MARKER BOARD, SURFACE MOUNTED — 3 / A-10.1
33. MOTORIZED PROJECTION SCREEN — 7 / A-10.1
34. WALL MOUNTED SHORT THROW PROJECTOR, S.T.D. — 2 / AV-7.13, 1 / A-10.1
35. CEILING MOUNTED PROJECTOR, S.T.D. — 5 / AV-7.13
36. DRESSING ROOM MIRROR — 11 / A-10.1
37. ELECTRIC HAND DRYER
38. TOILET PARTITION — 9 / A-10.1
39. URINAL PARTITION — 9 / A-10.1
40. P-LAM FACED ACOUSTICAL WALL PANEL
41. LADDER — 18 / A-10.1
42. ACOUSTIC REFLECTORS
43. 1" THICK FABRIC WRAPPED ACOUSTICAL WALL PANELS
44. 2" THICK FABRIC WRAPPED ACOUSTICAL WALL PANELS
45. SUSPENDED ACOUSTIC CEILING, SEE REFLECTED CEILING PLAN
46. CANE RAIL — 9 / A-10.2
47. DRESSING ROOM SHELF
48. P-LAM WALL CAP TO MATCH ACOUSTIC REFLECTORS

INTERIOR ELEVATION GENERAL NOTES

1. NOTES AND SYMBOLS ARE TO APPLY AT ALL AREAS OF SIMILAR GRAPHI REPRESENTATION. SUCH INDICATIONS MAY BE LIMITED TO PROMOTE CLARITY OR AVOID REDUNDANCY. NO LIMITATION OF APPLICATION SHALL BE CONSTRUED WITHOUT SPECIFIC NOTATION.
2. REFER TO MECHANICAL DRAWINGS FOR REGISTERS AND VENTS NOT OTHERWISE SHOWN.
3. REFER TO ELECTRICAL DRAWINGS FOR HORNS, SPEAKERS, PULL STATIONS AND OTHER FEATURES NOT OTHERWISE SHOWN.
4. REFER TO THEATRICAL DRAWINGS FOR EQUIPMENTS AND OTHER FEATURES NOT OTHERWISE SHOWN.
5. TYPICAL MOUNTING HEIGHTS OF ACCESSIBLE ELEMENTS AT ACCESSIBLE FIXTURES SEE — 4 / A-10.1
6. FLUSH VALVE HANDLES SHALL BE LOCATED AT THE WIDE SIDE OF ACCESSIBLE STALL.
7. FLOORING & BASE SHALL EXTEND UNDER ACCESSIBLE SINK/LAVATORY BASE CABINETS TO THE WALL. HOT WATER AND DRAINPIPES ACCESSIBLE UNDER LAVATORIES SHALL BE INSULATED OR OTHERWISE COVERED. THERE SHALL BE NO SHARP OR ABRASIVE SURFACES UNDE LAVATORIES.
8. PROVIDE SOLID BLOCKING FOR CABINET, ACCESSORY, OR EQUIPMENT MOUNTING

WALL AND BASE FINISH CODES

NOT ALL CODES MAY APPLY TO THIS SHEET, SEE FINISH & COLOR SCHEDU

W-1	PAINTED GYP. BD. TYP.	B-1	4" COVED RUBBER BASE TYP.
W-2	PAINTED GYP. BD. TO MATCH STUCCO (DARK)	B-2	4" VENTED RUBBER BASE
W-3	PAINTED GYP. BD. TO MATCH STUCCO (LIGHT)	B-3	SHEET VINYL BASE
W-4	METAL PANELS (BLUE)	B-4	FLUID APPLIED EPOXY
W-5	TILE TYP.		
W-6	ACOUSTIC PANELS		
W-7	FIBER REINFORCED PANELS		
W-8	PAINTED GYP. BD. TO MATCH CEILING CL-7		
W-9	FRP PANEL		

LEGEND

TYPICAL WALL CORNERLINE (SEE FLOOR PLAN)

SCHEMATIC WALL (PLAN VIEW) - BEND AT WALL CORNERLINE REPRESENTED ALPHABETICALLY. INTERIOR ELEVATIONS SHOWS WALL IN FLATTENED STATE. NOTE, SCHEMATIC WALL DRAWN AT HALF SCALE U.N.O.

QUATTROCCHI KWOK ARCHITECTS
Main Office:
636 Fifth Street, Santa Rosa, CA 95404
Pleasanton Office:
600 Main Street, Suite E,
Pleasanton, CA 94566
(707) 576-0829

LICENSED ARCHITECT
JIM THEISS
LICENSE # C22643
EXP JUNE 30, 2021
STATE OF CALIFORNIA

SIGNED: AUGUST 13, 2019

FREEDOM HIGH SCHOOL

PERFORMING ARTS AND CTE FACILITIES

1050 NEROLY RD,
OAKLEY, CA 94561

LIBERTY UNION HIGH SCHOOL DISTRICT

ARCH PROJECT NO: 1739.00
DRAWN BY:
DRAWING SCALE:
PTN: 61721-0068

BID SET

AUGUST 13, 2019

SHEET TITLE

BLDG A INTERIOR ELEVATIONS

SHEET NUMBER

A-A7.9

BIM Server: BIMCLOUD-QKA - BIMcloud/1739.00 - Freedom High School/1739.00 FREEDOM HS Performing Arts Center.8i6/2019.4:51 PM

VIEW 2

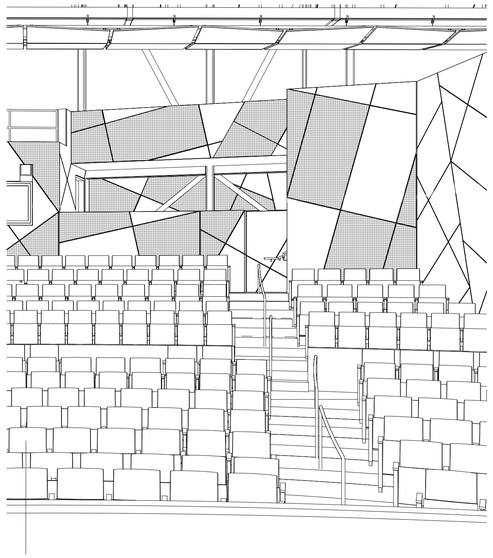

VIEW 1

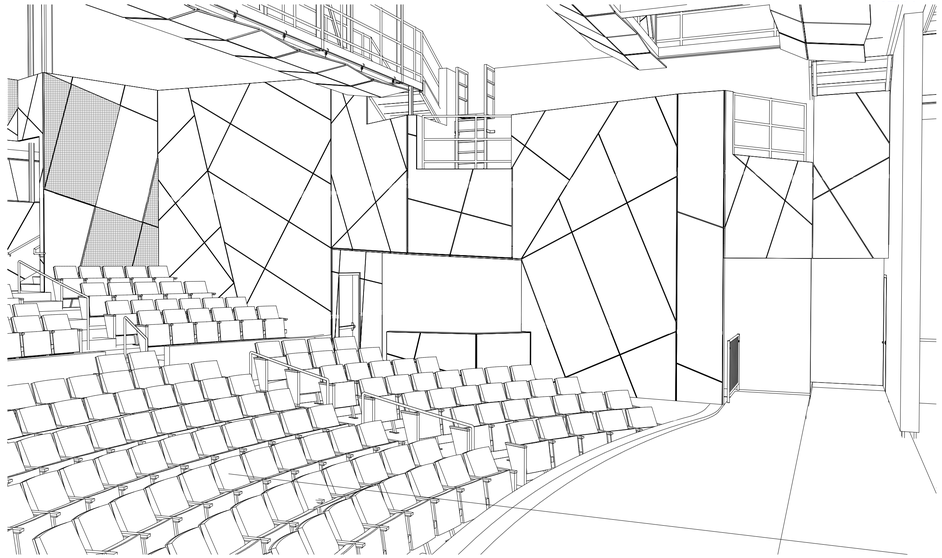

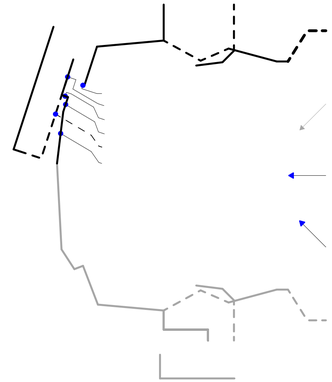

WALL PANEL PERSPECTIVES | 1

NTS | A-A2.1

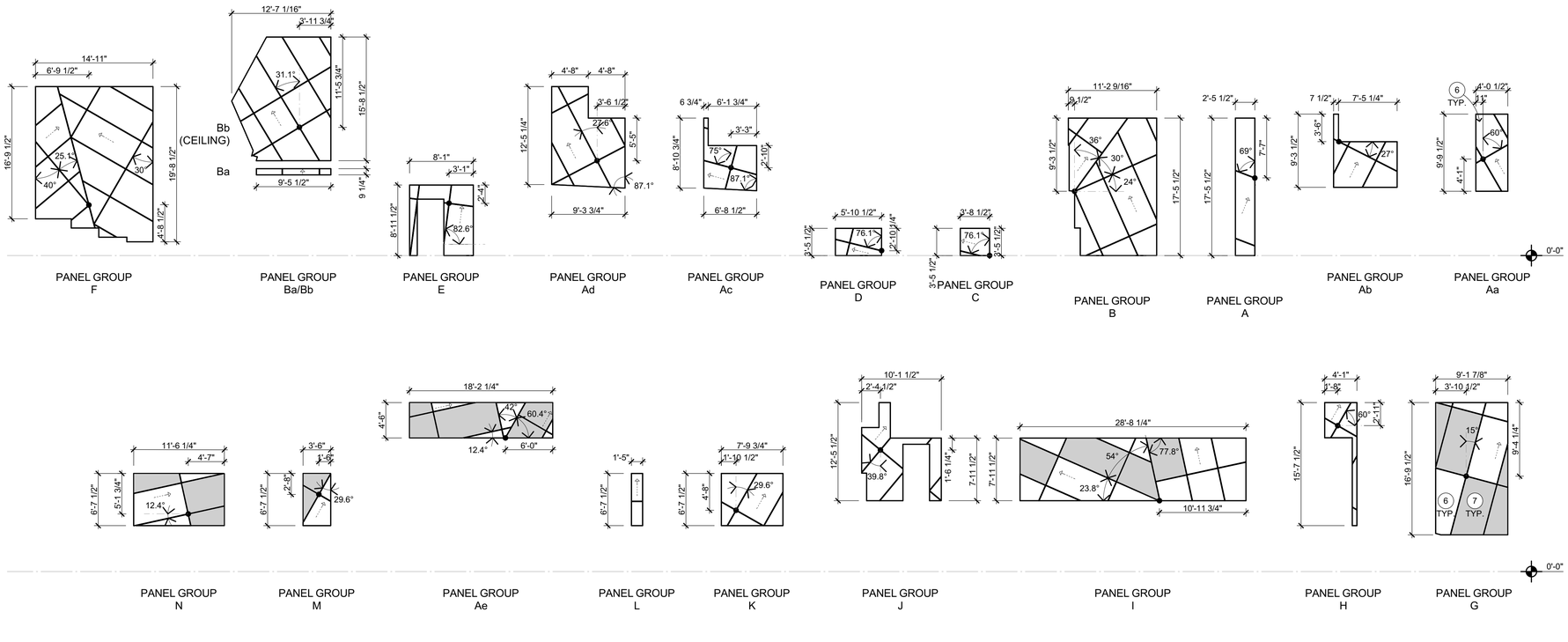

WALL PANELS | 2

1/8" = 1'-0" | A-A2.1

WALL PANEL KEYNOTES

NOT ALL KEYNOTES MAY APPLY TO THIS SHEET

1. STRUCTURAL ITEM, S.S.D.
2. MECHANICAL ITEM, S.M.D.
3. PLUMBING ITEM, S.P.D.
4. ELECTRICAL ITEM, S.E.D.
5. THEATRICAL ITEM, S.T.D.
6. P-LAM FACED ACOUSTICAL WALL PANELS
7. 2" THICK FABRIC WRAPPED ACOUSTICAL WALL PANELS

WALL PANEL GENERAL NOTES

1. NOTES AND SYMBOLS ARE TO APPLY AT ALL AREAS OF SIMILAR GRAPHIC REPRESENTATION. SUCH INDICATIONS MAY BE LIMITED TO PROMOTE CLARITY OR AVOID REDUNDANCY. NO LIMITATION OF APPLICATION SHALL BE CONSTRUED WITHOUT SPECIFIC NOTATION.
2. REFER TO MECHANICAL DRAWINGS FOR REGISTERS AND VENTS NOT OTHERWISE SHOWN.
3. REFER TO ELECTRICAL DRAWINGS FOR HORNS, SPEAKERS, PULL STATIONS AND OTHER FEATURES NOT OTHERWISE SHOWN.
4. REFER TO THEATRICAL DRAWINGS FOR EQUIPMENTS AND OTHER FEATURES NOT OTHERWISE SHOWN.
4. TYPICAL MOUNTING HEIGHTS OF ACCESSIBLE ELEMENTS AT ACCESSIBLE FIXTURES SEE (4 / A-10.1)
5. HOST WALL NOT SHOWN.
6. ALL WALL AND CEILING PANELS ARE SHOWN IN AN UNFOLDED, FLATTENED PHASE.
7. ALL PANEL DIMENSIONS ARE BASED ON TYPICAL 4'x8' MDF SHEETS. PANELS SIZES SHALL BE CUT TO SUIT.

WALL PANEL LEGEND

A B C — SCHEMATIC WALL (PLAN VIEW) - BEND AT WALL CORNERLINE REPRESENTED ALPHABETICALLY. INTERIOR ELEVATIONS SHOWS WALL IN FLATTENED STATE. NOTE, SCHEMATIC WALL DRAWN AT HALF SCALE U.N.O.

PANEL GRAIN DIRECTION

PANEL STARTING POINT - STARTING POINT INDICATED TO CENTERLINE OF PANEL REVEAL

1 — PERSPECTIVE VIEW DIRECTION

QUATTROCCHI KWOK ARCHITECTS

Main Office:
636 Fifth Street, Santa Rosa, CA 95404
Pleasanton Office:
600 Main Street, Suite E,
Pleasanton, CA 94566
(707) 576-0829

LICENSED ARCHITECT
JIM THEISS
LICENSE # C22643
EXP JUNE 30, 2021
STATE OF CALIFORNIA

SIGNED: AUGUST 13, 2019

FREEDOM HIGH SCHOOL

PERFORMING ARTS AND CTE FACILITIES

1050 NEROLY RD,
OAKLEY, CA 94561

LIBERTY UNION HIGH SCHOOL DISTRICT

ARCH PROJECT NO:	1739.00
DRAWN BY:	
DRAWING SCALE:	
PTN:	61721-0068

BID SET

AUGUST 13, 2019

SHEET TITLE

BLDG A INTERIOR ELEVATIONS - WALL PANELS

SHEET NUMBER

A-A7.10

BIM Server: BIMCLOUD-QKA - BIMcloud/1739.00 - Freedom High School/1739.00 FREEDOM HS Performing Arts Center=8/6/2019-4:51 PM

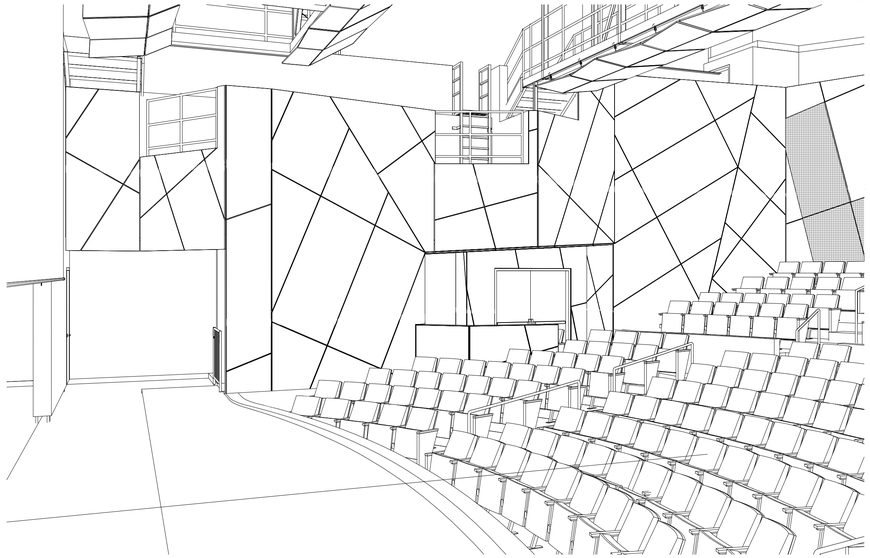

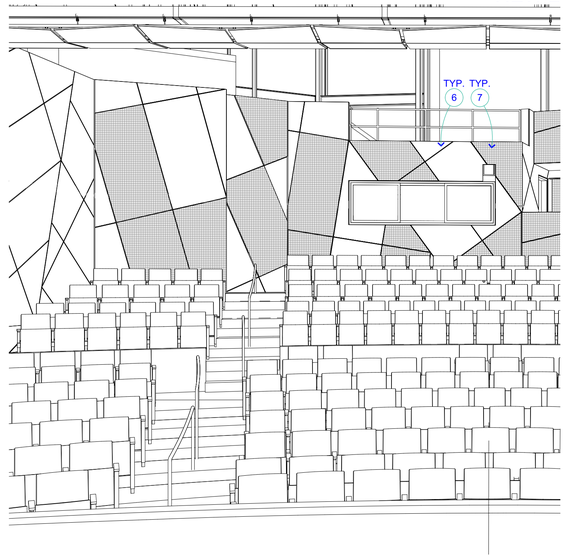

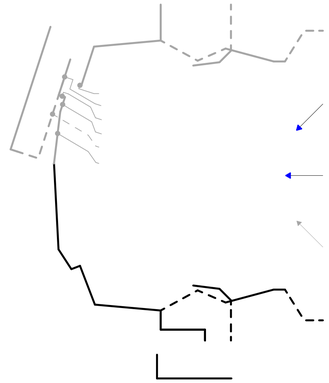

WALL PANEL PERSPECTIVES **1**

1/8" = 1'-0" A-A2.1

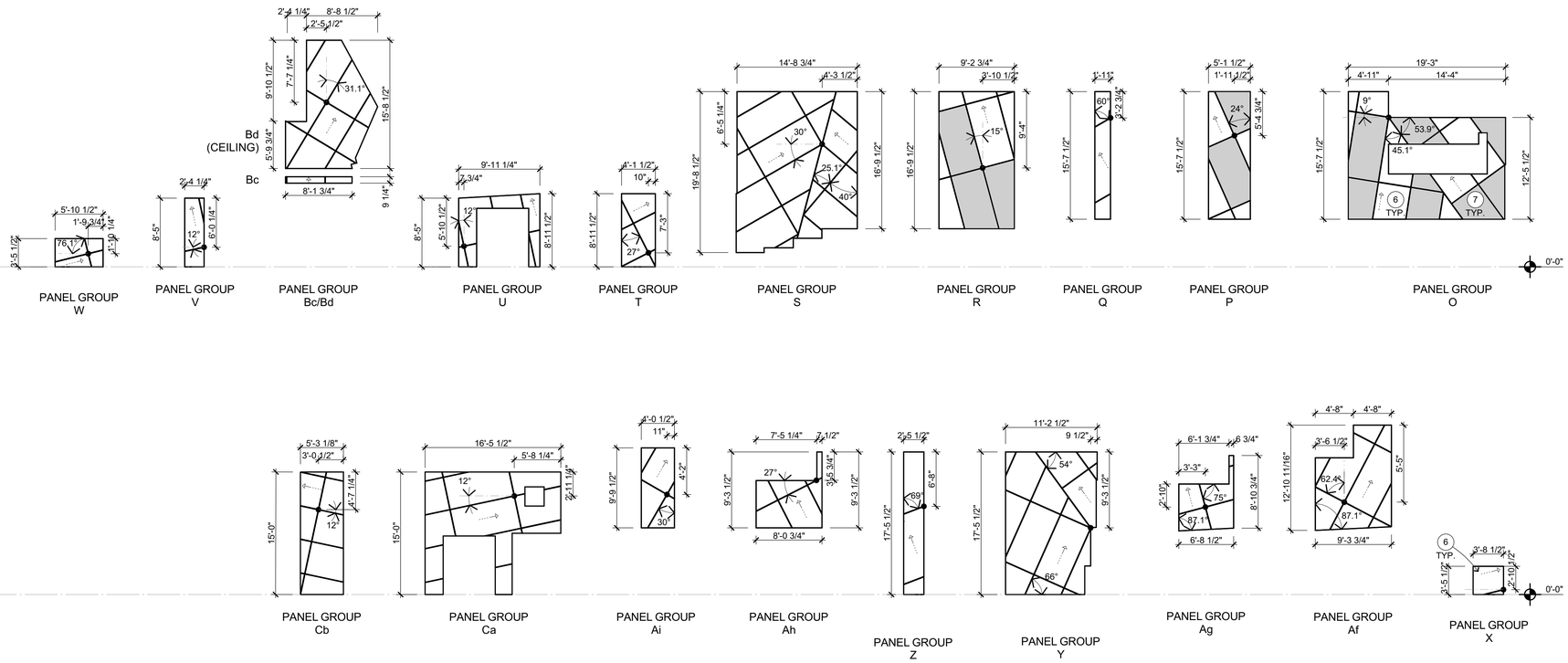

WALL PANELS **2**

1/8" = 1'-0" A-A2.1

WALL PANEL KEYNOTES

NOT ALL KEYNOTES MAY APPLY TO THIS SHEET

1. STRUCTURAL ITEM, S.S.D.
2. MECHANICAL ITEM, S.M.D.
3. PLUMBING ITEM, S.P.D.
4. ELECTRICAL ITEM, S.E.D.
5. THEATRICAL ITEM, S.T.D.
6. P-LAM FACED ACOUSTICAL WALL PANELS
7. 2" THICK FABRIC WRAPPED ACOUSTICAL WALL PANELS

WALL PANEL GENERAL NOTES

1. NOTES AND SYMBOLS ARE TO APPLY AT ALL AREAS OF SIMILAR GRAPHIC REPRESENTATION. SUCH INDICATIONS MAY BE LIMITED TO PROMOTE CLARITY OR AVOID REDUNDANCY. NO LIMITATION OF APPLICATION SHALL BE CONSTRUED WITHOUT SPECIFIC NOTATION.
2. REFER TO MECHANICAL DRAWINGS FOR REGISTERS AND VENTS NOT OTHERWISE SHOWN.
3. REFER TO ELECTRICAL DRAWINGS FOR HORNS, SPEAKERS, PULL STATIONS AND OTHER FEATURES NOT OTHERWISE SHOWN.
4. REFER TO THEATRICAL DRAWINGS FOR EQUIPMENTS AND OTHER FEATURES NOT OTHERWISE SHOWN.
4. TYPICAL MOUNTING HEIGHTS OF ACCESSIBLE ELEMENTS AT ACCESSIBLE FIXTURES SEE (4 / A-10.1)
5. HOST WALL NOT SHOWN.
6. ALL WALL AND CEILING PANELS ARE SHOWN IN AN UNFOLDED, FLATTENED PHASE.
7. ALL PANEL DIMENSIONS ARE BASED ON TYPICAL 4'x8' MDF SHEETS. PANELS SIZES SHALL BE CUT TO SUIT.

WALL PANEL LEGEND

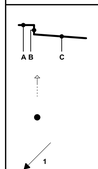

SCHEMATIC WALL (PLAN VIEW) - BEND AT WALL CORNERLINE REPRESENTED ALPHABETICALLY. INTERIOR ELEVATIONS SHOWS WALL IN FLATTENED STATE. NOTE, SCHEMATIC WALL DRAWN AT HALF SCALE U.N.O.

PANEL GRAIN DIRECTION

PANEL STARTING POINT - STARTING POINT INDICATED TO CENTERLINE OF PANEL REVEAL

PERSPECTIVE VIEW DIRECTION

QUATTROCCHI KWOK ARCHITECTS

Main Office:
636 Fifth Street, Santa Rosa, CA 95404
Pleasanton Office:
600 Main Street, Suite E,
Pleasanton, CA 94566
(707) 576-0829

LICENSED ARCHITECT
JIM THEISS
LICENSE # C22643
EXP. JUNE 30, 2021
STATE OF CALIFORNIA

SIGNED: AUGUST 13, 2019

FREEDOM HIGH SCHOOL

PERFORMING ARTS AND CTE FACILITIES

1050 NEROLY RD,
OAKLEY, CA 94561

LIBERTY UNION HIGH SCHOOL DISTRICT

ARCH PROJECT NO:	1739.00
DRAWN BY:	
DRAWING SCALE:	
PTN:	61721-0068

BID SET

AUGUST 13, 2019

SHEET TITLE

BLDG A INTERIOR ELEVATIONS - WALL PANELS

SHEET NUMBER

A-A7.11

BIM Server: BIMCLOUD-QKA - BIMcloud/1739.00 - Freedom High School/1739.00 FREEDOM HS Performing Arts Center>8/6/2019 4:52 PM

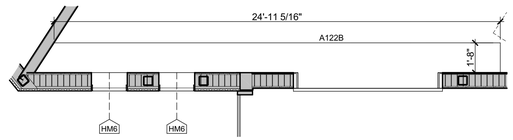

TICKET/CONCESSION ENLARGED PLAN 1

1/4" = 1'-0"

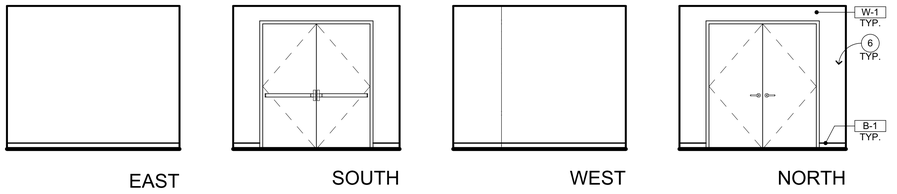

LIGHT LOCK **120**

1/4" = 1'-0" A-A2.1

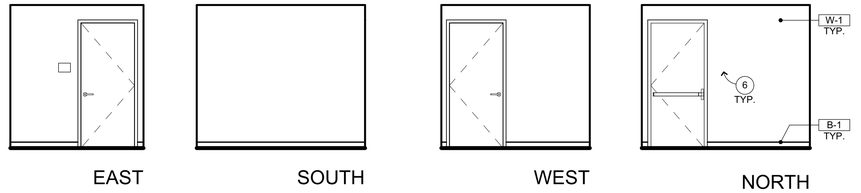

LIGHT LOCK **121**

1/4" = 1'-0" A-A2.1

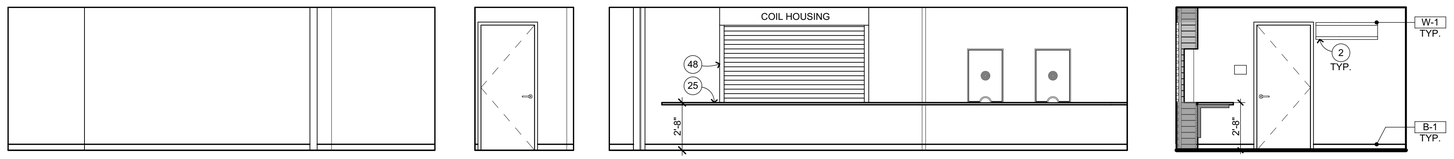

TICKETS & CONCESSION **122**

1/4" = 1'-0" A-A2.1

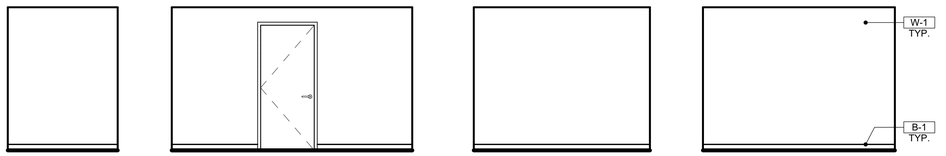

CONTROL **123**

1/4" = 1'-0" A-A2.1

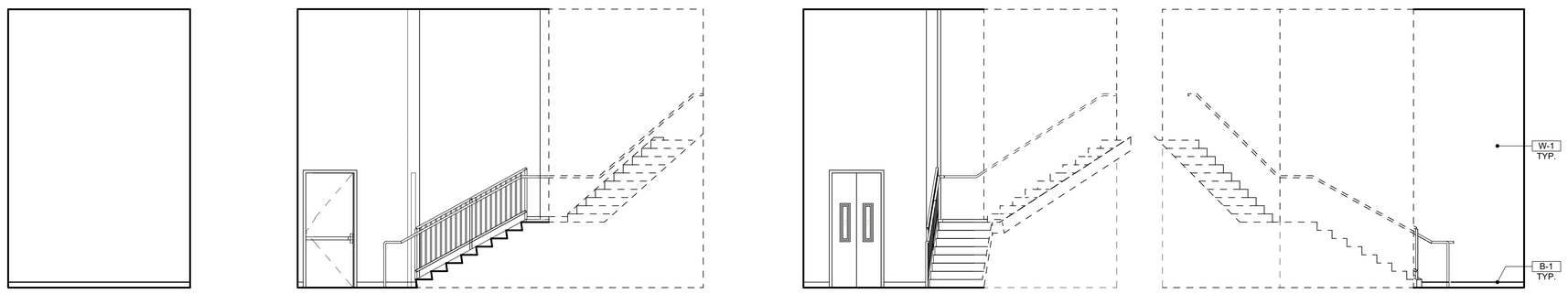

STAIR **124**

1/4" = 1'-0" A-A2.1

INTERIOR ELEVATION KEYNOTES

NOT ALL KEYNOTES MAY APPLY TO THIS SHEET

1. STRUCTURAL ITEM, S.S.D.
2. MECHANICAL ITEM, S.M.D.
3. PLUMBING ITEM, S.P.D.
4. ELECTRICAL ITEM, S.E.D.
5. THEATRICAL ITEM, S.T.D.
6. SIGNAGE, SEE ARCHITECTURAL GRAPHICS PLAN
7. FIRE EXTINGUISHER, S.F.P.D. — 1 / A-10.1
8. SEMI RECESSED F.E.C., S.F.P.D. — 1 / A-10.2
9. RECESSED HOSE CABINET, S.F.P.D. — 4 / A-10.2
10. OVERHEAD DOOR — 2 / A-9.6
11. CHAINLINK FENCE AND GATE
12. EXTERIOR TICKETING WINDOW — 17 / A-9.5
13. ROLL UP COILING DOOR — 20 / A-9.5
14. FOLDING PARTITION
15. BULK HEAD
16. TENSION GRID, S.T.D. & S.S.D.
17. CATWALK, S.T.D. & S.S.D.
18. LIGHTING/EQUIPMENT GUARDRAILS, S.T.D. — 9 / A-9.17
19. GUARDRAILS, S.T.D. — 9 / A-9.17
20. HANDRAILS, S.T.D. — 2 / A-10.8
21. ACCESSIBLE HI-LO DRINKING FOUNTAIN W/ BOTTLE FILLER — 6 / A-10.1
22. EMERGENCY EYE WASH STATION
23. COMMERCIAL GRADE MOP SINK
24. DRESSING ROOM COUNTERTOP — 2 / A-10.6
25. TICKET COUNTERTOP — 4 / A-10.6
26. COSTUME SHELVES & POLE — 8 / A-10.7
27. TROPHY DISPLAY CASEWORK — 2 / A-10.7
28. AUDIO COUNTERTOP — 4 / A-10.6
29. CONTROL ROOM COUNTERTOP
30. TACK BOARD, SURFACE MOUNTED — 5 / A-10.2
31. CONCESSION COUNTERTOP
32. MARKER BOARD, SURFACE MOUNTED — 3 / A-10.1
33. MOTORIZED PROJECTION SCREEN — 7 / A-10.1
34. WALL MOUNTED SHORT THROW PROJECTOR, S.T.D. — 2 / AV-7.13, 1 / A-10.1
35. CEILING MOUNTED PROJECTOR, S.T.D. — 5 / AV-7.13
36. DRESSING ROOM MIRROR — 11 / A-10.1
37. ELECTRIC HAND DRYER
38. TOILET PARTITION — 9 / A-10.1
39. URINAL PARTITION — 9 / A-10.1
40. P-LAM FACED ACOUSTICAL WALL PANELS
41. LADDER — 18 / A-10.1
42. ACOUSTIC REFLECTORS
43. 1" THICK FABRIC WRAPPED ACOUSTICAL WALL PANELS
44. 2" THICK FABRIC WRAPPED ACOUSTICAL WALL PANELS
45. SUSPENDED ACOUSTIC CEILING, SEE REFLECTED CEILING PLAN
46. CANE RAIL — 9 / A-10.2
47. DRESSING ROOM SHELF
48. P-LAM WALL CAP TO MATCH ACOUSTIC REFLECTORS

INTERIOR ELEVATION GENERAL NOTES

1. NOTES AND SYMBOLS ARE TO APPLY AT ALL AREAS OF SIMILAR GRAPHI REPRESENTATION. SUCH INDICATIONS MAY BE LIMITED TO PROMOTE CLARITY OR AVOID REDUNDANCY. NO LIMITATION OF APPLICATION SHALL BE CONSTRUED WITHOUT SPECIFIC NOTATION.
2. REFER TO MECHANICAL DRAWINGS FOR REGISTERS AND VENTS NOT OTHERWISE SHOWN.
3. REFER TO ELECTRICAL DRAWINGS FOR HORNS, SPEAKERS, PULL STATIONS AND OTHER FEATURES NOT OTHERWISE SHOWN.
4. REFER TO THEATRICAL DRAWINGS FOR EQUIPMENTS AND OTHER FEATURES NOT OTHERWISE SHOWN.
5. TYPICAL MOUNTING HEIGHTS OF ACCESSIBLE ELEMENTS AT ACCESSIBLE FIXTURES SEE — 4 / A-10.1
6. FLUSH VALVE HANDLES SHALL BE LOCATED AT THE WIDE SIDE OF ACCESSIBLE STALL.
7. FLOORING & BASE SHALL EXTEND UNDER ACCESSIBLE SINK/LAVATORY BASE CABINETS TO THE WALL. HOT WATER AND DRAINPIPES ACCESSIBLE UNDER LAVATORIES SHALL BE INSULATED OR OTHERWISE COVERED. THERE SHALL BE NO SHARP OR ABRASIVE SURFACES UNDE LAVATORIES.
8. PROVIDE SOLID BLOCKING FOR CABINET, ACCESSORY, OR EQUIPMENT MOUNTING

WALL AND BASE FINISH CODES

NOT ALL CODES MAY APPLY TO THIS SHEET, SEE FINISH & COLOR SCHEDU

W-1	PAINTED GYP. BD. TYP.	B-1	4" COVED RUBBER BASE TYP.
W-2	PAINTED GYP. BD. TO MATCH STUCCO (DARK)	B-2	4" VENTED RUBBER BASE
W-3	PAINTED GYP. BD. TO MATCH STUCCO (LIGHT)	B-3	SHEET VINYL BASE
W-4	METAL PANELS (BLUE)	B-4	FLUID APPLIED EPOXY
W-5	TILE TYP.		
W-6	ACOUSTIC PANELS		
W-7	FIBER REINFORCED PANELS		
W-8	PAINTED GYP. BD. TO MATCH CEILING CL-7		
W-9	FRP PANEL		

LEGEND

TYPICAL WALL CORNERLINE (SEE FLOOR PLAN)

SCHEMATIC WALL (PLAN VIEW) - BEND AT WALL CORNERLINE REPRESENTED ALPHABETICALLY. INTERIOR ELEVATIONS SHOWS WALL IN FLATTENED STATE. NOTE, SCHEMATIC WALL DRAWN AT HALF SCALE U.N.O.

QUATTROCCHI KWOK ARCHITECTS

Main Office:
636 Fifth Street, Santa Rosa, CA 95404
Pleasanton Office:
600 Main Street, Suite E,
Pleasanton, CA 94566
(707) 576-0829

LICENSED ARCHITECT
JIM THEISS
LICENSE # C22643
EXP JUNE 30, 2021
STATE OF CALIFORNIA

SIGNED: AUGUST 13, 2019

FREEDOM HIGH SCHOOL

PERFORMING ARTS AND CTE FACILITIES

1050 NEROLY RD,
OAKLEY, CA 94561

LIBERTY UNION HIGH SCHOOL DISTRICT

ARCH PROJECT NO: 1739.00
DRAWN BY:
DRAWING SCALE:
PTN: 61721-0068

BID SET

AUGUST 13, 2019

SHEET TITLE

BLDG A INTERIOR ELEVATIONS

SHEET NUMBER

A-A7.12

BIM Server: BIMCLOUD-QKA - BIMcloud/1739.00 - Freedom High School/1739.00 FREEDOM HS Performing Arts Center;8/6/2019;4:53 PM

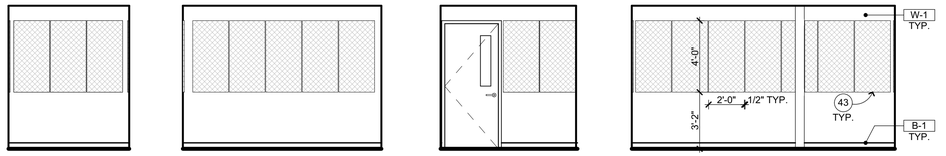

PRACTICE ROOM **125** A-A2.1

1/4" = 1'-0"

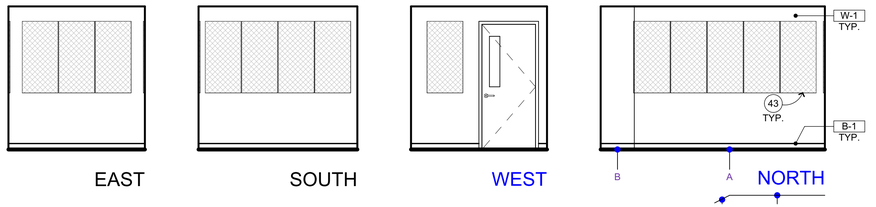

PRACTICE ROOM **126** A-A2.1

1/4" = 1'-0"

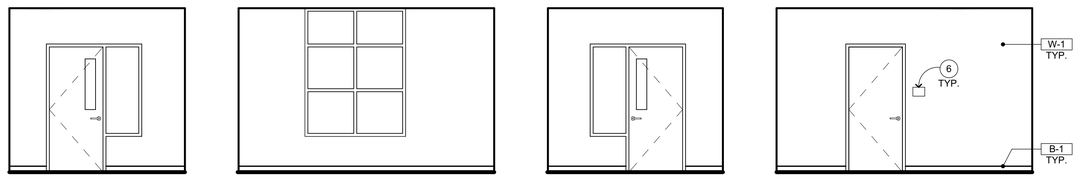

OFFICE **127** A-A2.1

1/4" = 1'-0"

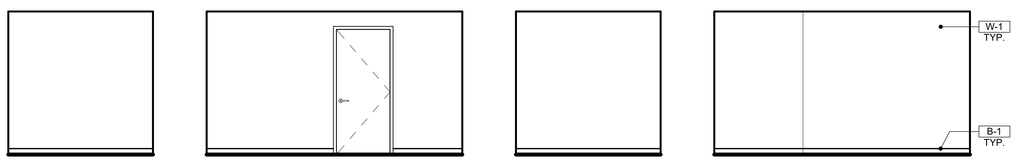

CHORAL STORAGE **128** A-A2.1

1/4" = 1'-0"

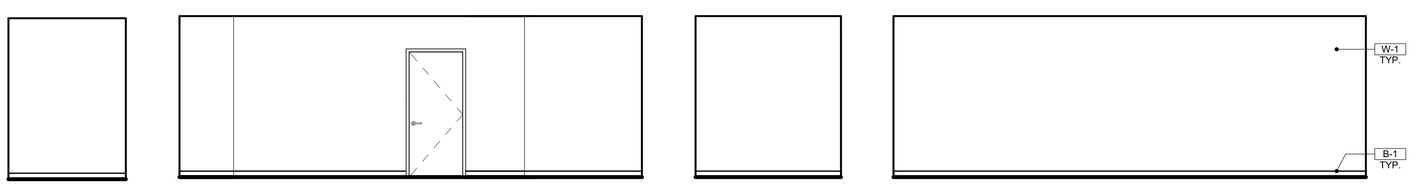

CHORAL STORAGE **129** A-A2.1

1/4" = 1'-0"

INTERIOR ELEVATION KEYNOTES

NOT ALL KEYNOTES MAY APPLY TO THIS SHEET

1. STRUCTURAL ITEM, S.S.D.
2. MECHANICAL ITEM, S.M.D.
3. PLUMBING ITEM, S.P.D.
4. ELECTRICAL ITEM, S.E.D.
5. THEATRICAL ITEM, S.T.D.
6. SIGNAGE, SEE ARCHITECTURAL GRAPHICS PLAN
7. FIRE EXTINGUISHER, S.F.P.D. — 1 / A-10.1
8. SEMI RECESSED F.E.C., S.F.P.D. — 1 / A-10.2
9. RECESSED HOSE CABINET, S.F.P.D. — 4 / A-10.2
10. OVERHEAD DOOR — 2 / A-9.6
11. CHAINLINK FENCE AND GATE
12. EXTERIOR TICKETING WINDOW — 17 / A-9.5
13. ROLL UP COILING DOOR — 20 / A-9.5
14. FOLDING PARTITION
15. BULK HEAD
16. TENSION GRID, S.T.D. & S.S.D.
17. CATWALK, S.T.D. & S.S.D.
18. LIGHTING/EQUIPMENT GUARDRAILS, S.T.D. — 9 / A-9.17
19. GUARDRAILS, S.T.D. — 9 / A-9.17
20. HANDRAILS, S.T.D. — 2 / A-10.8
21. ACCESSIBLE HI-LO DRINKING FOUNTAIN W/ BOTTLE FILLER — 6 / A-10.1
22. EMERGENCY EYE WASH STATION
23. COMMERCIAL GRADE MOP SINK
24. DRESSING ROOM COUNTERTOP — 2 / A-10.6
25. TICKET COUNTERTOP — 4 / A-10.6
26. COSTUME SHELVES & POLE — 8 / A-10.7
27. TROPHY DISPLAY CASEWORK — 2 / A-10.7
28. AUDIO COUNTERTOP — 4 / A-10.6
29. CONTROL ROOM COUNTERTOP
30. TACK BOARD, SURFACE MOUNTED — 5 / A-10.2
31. CONCESSION COUNTERTOP
32. MARKER BOARD, SURFACE MOUNTED — 3 / A-10.1
33. MOTORIZED PROJECTION SCREEN — 7 / A-10.1
34. WALL MOUNTED SHORT THROW PROJECTOR, S.T.D. — 2 / AV-7.13
35. CEILING MOUNTED PROJECTOR, S.T.D. — 5 / AV-7.13
36. DRESSING ROOM MIRROR — 11 / A-10.1
37. ELECTRIC HAND DRYER
38. TOILET PARTITION — 9 / A-10.1
39. URINAL PARTITION — 9 / A-10.1
40. P-LAM FACED ACOUSTICAL WALL PANELS
41. LADDER — 18 / A-10.1
42. ACOUSTIC REFLECTORS
43. 1" THICK FABRIC WRAPPED ACOUSTICAL WALL PANELS
44. 2" THICK FABRIC WRAPPED ACOUSTICAL WALL PANELS
45. SUSPENDED ACOUSTIC CEILING, SEE REFLECTED CEILING PLAN
46. CANE RAIL — 9 / A-10.2
47. DRESSING ROOM SHELF
48. P-LAM WALL CAP TO MATCH ACOUSTIC REFLECTORS

INTERIOR ELEVATION GENERAL NOTES

1. NOTES AND SYMBOLS ARE TO APPLY AT ALL AREAS OF SIMILAR GRAPHI REPRESENTATION. SUCH INDICATIONS MAY BE LIMITED TO PROMOTE CLARITY OR AVOID REDUNDANCY. NO LIMITATION OF APPLICATION SHALL BE CONSTRUED WITHOUT SPECIFIC NOTATION.
2. REFER TO MECHANICAL DRAWINGS FOR REGISTERS AND VENTS NOT OTHERWISE SHOWN.
3. REFER TO ELECTRICAL DRAWINGS FOR HORNS, SPEAKERS, PULL STATIONS AND OTHER FEATURES NOT OTHERWISE SHOWN.
4. REFER TO THEATRICAL DRAWINGS FOR EQUIPMENTS AND OTHER FEATURES NOT OTHERWISE SHOWN.
5. TYPICAL MOUNTING HEIGHTS OF ACCESSIBLE ELEMENTS AT ACCESSIBLE FIXTURES SEE 4 / A-10.1
6. FLUSH VALVE HANDLES SHALL BE LOCATED AT THE WIDE SIDE OF ACCESSIBLE STALL.
7. FLOORING & BASE SHALL EXTEND UNDER ACCESSIBLE SINK/LAVATORY BASE CABINETS TO THE WALL. HOT WATER AND DRAINPIPES ACCESSIBLE UNDER LAVATORIES SHALL BE INSULATED OR OTHERWISE COVERED. THERE SHALL BE NO SHARP OR ABRASIVE SURFACES UNDE LAVATORIES.
8. PROVIDE SOLID BLOCKING FOR CABINET, ACCESSORY, OR EQUIPMENT MOUNTING

WALL AND BASE FINISH CODES

NOT ALL CODES MAY APPLY TO THIS SHEET, SEE FINISH & COLOR SCHEDU

W-1	PAINTED GYP. BD. TYP.	B-1	4" COVED RUBBER BASE TYP.
W-2	PAINTED GYP. BD. TO MATCH STUCCO (DARK)	B-2	4" VENTED RUBBER BASE
W-3	PAINTED GYP. BD. TO MATCH STUCCO (LIGHT)	B-3	SHEET VINYL BASE
W-4	METAL PANELS (BLUE)	B-4	FLUID APPLIED EPOXY
W-5	TILE TYP.		
W-6	ACOUSTIC PANELS		
W-7	FIBER REINFORCED PANELS		
W-8	PAINTED GYP. BD. TO MATCH CEILING CL-7		
W-9	FRP PANEL		

LEGEND

TYPICAL WALL CORNERLINE (SEE FLOOR PLAN)

SCHEMATIC WALL (PLAN VIEW) - BEND AT WALL CORNERLINE REPRESENTED ALPHABETICALLY. INTERIOR ELEVATIONS SHOWS WALL IN FLATTENED STATE. NOTE, SCHEMATIC WALL DRAWN AT HALF SCALE U.N.O.

QUATTROCCHI KWOK ARCHITECTS

Main Office:
636 Fifth Street, Santa Rosa, CA 95404
Pleasanton Office:
600 Main Street, Suite E,
Pleasanton, CA 94566
(707) 576-0829

LICENSED ARCHITECT
JIM THEISS
LICENSE # C22643
EXP JUNE 30, 2021
STATE OF CALIFORNIA

SIGNED: AUGUST 13, 2019

FREEDOM HIGH SCHOOL

PERFORMING ARTS AND CTE FACILITIES

1050 NEROLY RD,
OAKLEY, CA 94561

LIBERTY UNION HIGH SCHOOL DISTRICT

ARCH PROJECT NO:	1739.00
DRAWN BY:	
DRAWING SCALE:	
PTN:	61721-0068

BID SET

AUGUST 13, 2019

SHEET TITLE

BLDG A INTERIOR ELEVATIONS

SHEET NUMBER

A-A7.13

BIM Server: BIMCLOUD-QKA - BIMcloud/1739.00 - Freedom High School/1739.00 FREEDOM HS Performing Arts Center;8/6/2019;4:54 PM

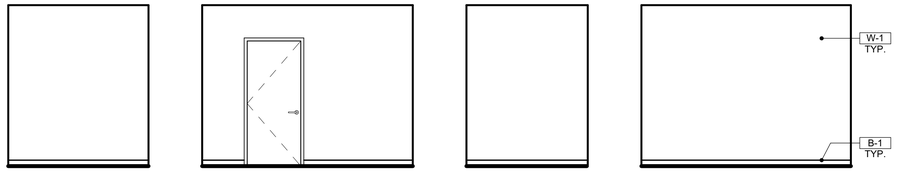

EAST SOUTH WEST NORTH

ELECT. **130**
1/4" = 1'-0" A-A2.1

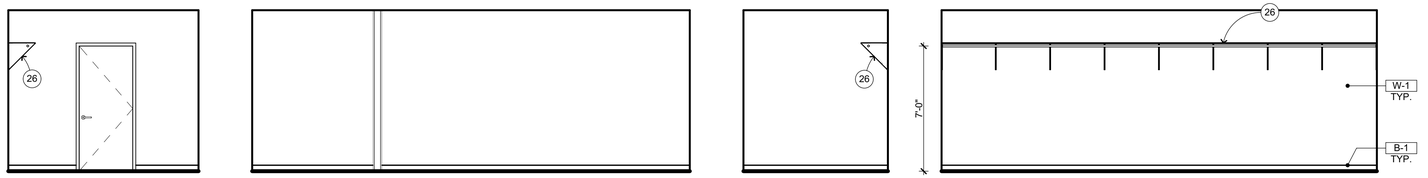

EAST SOUTH WEST NORTH

COSTUME STORAGE **131**
1/4" = 1'-0" A-A2.1

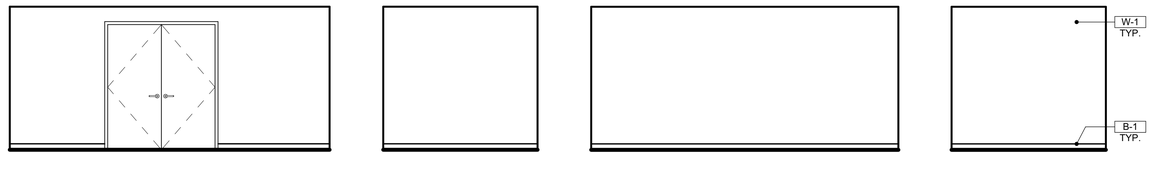

EAST SOUTH WEST NORTH

STORAGE **132**
1/4" = 1'-0" A-A2.1

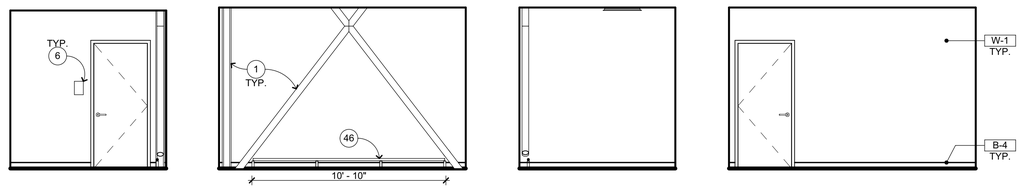

EAST SOUTH WEST NORTH

GIRLS CHANGING ROOM **133**
1/4" = 1'-0" A-A2.1

ACCESSORY SCHEDULE

NOT ALL ACCESSORY MAY APPLY TO THIS SHEET

A	TOILET PAPER DISPENSER, RECESSED, (3" MAXIMUM PROJECTION)
B	TOILET PAPER DISPENSER, SURFACE MOUNTED
C	36" GRAB BAR, FOR ATTACHMENT SEE
D	42" GRAB BAR, FOR ATTACHMENT SEE
E	MIRROR (TYP), FOR ATTACHMENT SEE
F	PAPER TOWEL DISPENSER, SURFACE MOUNTED
G	SOAP DISPENSER, SURFACE MOUNTED
H	TOILET SEAT COVER DISPENSER, SURFACE MOUNTED
J	SANITARY NAPKIN RECEPTACLE, RECESSED (3" MAXIMUM PROJECTION)
K	SANITARY NAPKIN RECEPTACLE
L	ELECTRIC HAND DRYER

C: 4 A-10.1, 5 A-10.1

E: 4 A-10.1, 11 A-10.1

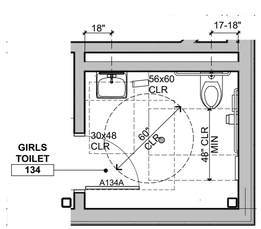

GIRLS TOILET 1

1/4" = 1'-0"

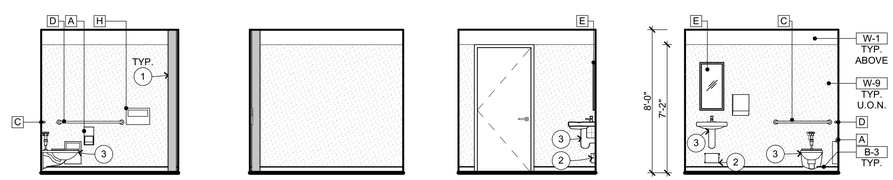

EAST SOUTH WEST NORTH

GIRLS TOILET **134**
1/4" = 1'-0" A-A2.1

INTERIOR ELEVATION KEYNOTES

NOT ALL KEYNOTES MAY APPLY TO THIS SHEET

1. STRUCTURAL ITEM, S.S.D.
2. MECHANICAL ITEM, S.M.D.
3. PLUMBING ITEM, S.P.D.
4. ELECTRICAL ITEM, S.E.D.
5. THEATRICAL ITEM, S.T.D.
6. SIGNAGE, SEE ARCHITECTURAL GRAPHICS PLAN
7. FIRE EXTINGUISHER, S.F.P.D. — 1 A-10.1
8. SEMI RECESSED F.E.C., S.F.P.D. — 1 A-10.2
9. RECESSED HOSE CABINET, S.F.P.D. — 4 A-10.2
10. OVERHEAD DOOR — 2 A-9.6
11. CHAINLINK FENCE AND GATE
12. EXTERIOR TICKETING WINDOW — 17 A-9.5
13. ROLL UP COILING DOOR — 20 A-9.5
14. FOLDING PARTITION
15. BULK HEAD
16. TENSION GRID, S.T.D. & S.S.D.
17. CATWALK, S.T.D. & S.S.D.
18. LIGHTING/EQUIPMENT GUARDRAILS, S.T.D. — 9 A-9.17
19. GUARDRAILS, S.T.D. — 9 A-9.17
20. HANDRAILS, S.T.D. — 2 A-10.8
21. ACCESSIBLE HI-LO DRINKING FOUNTAIN W/ BOTTLE FILLER — 6 A-10.1
22. EMERGENCY EYE WASH STATION
23. COMMERCIAL GRADE MOP SINK
24. DRESSING ROOM COUNTERTOP — 2 A-10.6
25. TICKET COUNTERTOP — 4 A-10.6
26. COSTUME SHELVES & POLE — 8 A-10.7
27. TROPHY DISPLAY CASEWORK — 2 A-10.7
28. AUDIO COUNTERTOP — 4 A-10.6
29. CONTROL ROOM COUNTERTOP
30. TACK BOARD, SURFACE MOUNTED — 5 A-10.2
31. CONCESSION COUNTERTOP
32. MARKER BOARD, SURFACE MOUNTED — 3 A-10.1
33. MOTORIZED PROJECTION SCREEN — 7 A-10.1
34. WALL MOUNTED SHORT THROW PROJECTOR, S.T.D. — 2 AV-7.13
35. CEILING MOUNTED PROJECTOR, S.T.D. — 5 AV-7.13
36. DRESSING ROOM MIRROR — 11 A-10.1
37. ELECTRIC HAND DRYER
38. TOILET PARTITION — 9 A-10.1
39. URINAL PARTITION — 9 A-10.1
40. P-LAM FACED ACOUSTICAL WALL PANELS
41. LADDER — 18 A-10.1
42. ACOUSTIC REFLECTORS
43. 1" THICK FABRIC WRAPPED ACOUSTICAL WALL PANELS
44. 2" THICK FABRIC WRAPPED ACOUSTICAL WALL PANELS
45. SUSPENDED ACOUSTIC CEILING, SEE REFLECTED CEILING PLAN
46. CANE RAIL — 9 A-10.2
47. DRESSING ROOM SHELF
48. P-LAM WALL CAP TO MATCH ACOUSTIC REFLECTORS

INTERIOR ELEVATION GENERAL NOTES

1. NOTES AND SYMBOLS ARE TO APPLY AT ALL AREAS OF SIMILAR GRAPHI REPRESENTATION. SUCH INDICATIONS MAY BE LIMITED TO PROMOTE CLARITY OR AVOID REDUNDANCY. NO LIMITATION OF APPLICATION SHALL BE CONSTRUED WITHOUT SPECIFIC NOTATION.
2. REFER TO MECHANICAL DRAWINGS FOR REGISTERS AND VENTS NOT OTHERWISE SHOWN.
3. REFER TO ELECTRICAL DRAWINGS FOR HORNS, SPEAKERS, PULL STATIONS AND OTHER FEATURES NOT OTHERWISE SHOWN.
4. REFER TO THEATRICAL DRAWINGS FOR EQUIPMENTS AND OTHER FEATURES NOT OTHERWISE SHOWN.
5. TYPICAL MOUNTING HEIGHTS OF ACCESSIBLE ELEMENTS AT ACCESSIBLE FIXTURES SEE — 4 A-10.1
6. FLUSH VALVE HANDLES SHALL BE LOCATED AT THE WIDE SIDE OF ACCESSIBLE STALL.
7. FLOORING & BASE SHALL EXTEND UNDER ACCESSIBLE SINK/LAVATORY BASE CABINETS TO THE WALL. HOT WATER AND DRAINPIPES ACCESSIBLE UNDER LAVATORIES SHALL BE INSULATED OR OTHERWISE COVERED. THERE SHALL BE NO SHARP OR ABRASIVE SURFACES UNDE LAVATORIES.
8. PROVIDE SOLID BLOCKING FOR CABINET, ACCESSORY, OR EQUIPMENT MOUNTING

WALL AND BASE FINISH CODES

NOT ALL CODES MAY APPLY TO THIS SHEET, SEE FINISH & COLOR SCHEDU

W-1	PAINTED GYP. BD. TYP.	B-1	4" COVED RUBBER BASE TYP.
W-2	PAINTED GYP. BD. TO MATCH STUCCO (DARK)	B-2	4" VENTED RUBBER BASE
W-3	PAINTED GYP. BD. TO MATCH STUCCO (LIGHT)	B-3	SHEET VINYL BASE
W-4	METAL PANELS (BLUE)	B-4	FLUID APPLIED EPOXY
W-5	TILE TYP.		
W-6	ACOUSTIC PANELS		
W-7	FIBER REINFORCED PANELS		
W-8	PAINTED GYP. BD. TO MATCH CEILING CL-7		
W-9	FRP PANEL		

LEGEND

TYPICAL WALL CORNERLINE (SEE FLOOR PLAN)

SCHEMATIC WALL (PLAN VIEW) - BEND AT WALL CORNERLINE REPRESENTED ALPHABETICALLY. INTERIOR ELEVATIONS SHOWS WALL IN FLATTENED STATE. NOTE, SCHEMATIC WALL DRAWN AT HALF SCALE U.N.O.

QUATTROCCHI KWOK ARCHITECTS
Main Office:
636 Fifth Street, Santa Rosa, CA 95404
Pleasanton Office:
600 Main Street, Suite E,
Pleasanton, CA 94566
(707) 576-0829

LICENSED ARCHITECT
JIM THEISS
LICENSE # C22643
EXP JUNE 30, 2021
STATE OF CALIFORNIA

SIGNED: AUGUST 13, 2019

FREEDOM HIGH SCHOOL

PERFORMING ARTS AND CTE FACILITIES

1050 NEROLY RD,
OAKLEY, CA 94561

LIBERTY UNION HIGH SCHOOL DISTRICT

ARCH PROJECT NO: 1739.00
DRAWN BY:
DRAWING SCALE:
PTN: 61721-0068

BID SET

AUGUST 13, 2019

SHEET TITLE

BLDG A INTERIOR ELEVATIONS

SHEET NUMBER

A-A7.14

BIM Server: BIMCLOUD-QKA - BIMcloud/1739.00 - Freedom High School/1739.00 FREEDOM HS Performing Arts Center;8/6/2019;4:56 PM

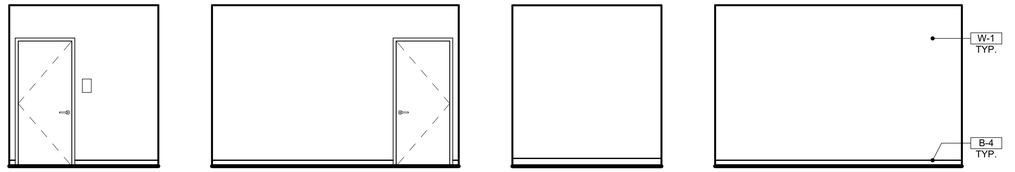

BOYS CHANGING ROOM **135**
1/4" = 1'-0" A-A2.1

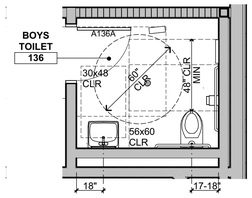

BOY'S TOILET 136 1
1/4" = 1'-0"

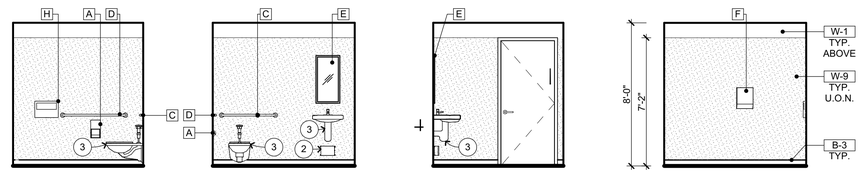

BOYS TOILET **136**
1/4" = 1'-0" A-A2.1

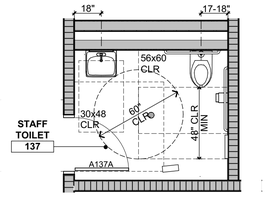

STAFF TOILET 137 2
1/4" = 1'-0"

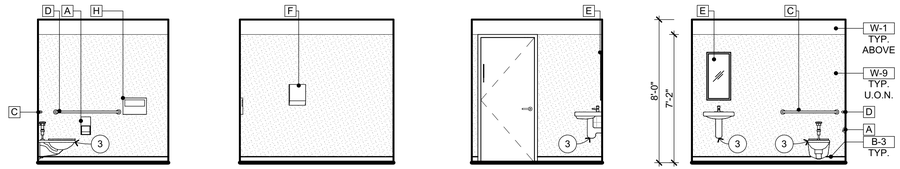

STAFF TOILET **137**
1/4" = 1'-0" A-A2.1

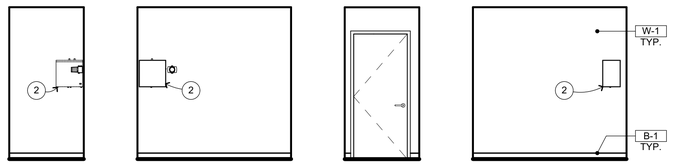

CUST. **138**
1/4" = 1'-0" A-A2.1

INTERIOR ELEVATION KEYNOTES

NOT ALL KEYNOTES MAY APPLY TO THIS SHEET

1 STRUCTURAL ITEM, S.S.D.
2 MECHANICAL ITEM, S.M.D.
3 PLUMBING ITEM, S.P.D.
4 ELECTRICAL ITEM, S.E.D.
5 THEATRICAL ITEM, S.T.D.
6 SIGNAGE, SEE ARCHITECTURAL GRAPHICS PLAN
7 FIRE EXTINGUISHER, S.F.P.D. — 1 / A-10.1
8 SEMI RECESSED F.E.C., S.F.P.D. — 1 / A-10.2
9 RECESSED HOSE CABINET, S.F.P.D. — 4 / A-10.2
10 OVERHEAD DOOR — 2 / A-9.6
11 CHAINLINK FENCE AND GATE
12 EXTERIOR TICKETING WINDOW — 17 / A-9.5
13 ROLL UP COILING DOOR — 20 / A-9.5
14 FOLDING PARTITION
15 BULK HEAD
16 TENSION GRID, S.T.D. & S.S.D.
17 CATWALK, S.T.D. & S.S.D.
18 LIGHTING/EQUIPMENT GUARDRAILS, S.T.D. — 9 / A-9.17
19 GUARDRAILS, S.T.D. — 9 / A-9.17
20 HANDRAILS, S.T.D. — 2 / A-10.8
21 ACCESSIBLE HI-LO DRINKING FOUNTAIN W/ BOTTLE FILLER — 6 / A-10.1
22 EMERGENCY EYE WASH STATION
23 COMMERCIAL GRADE MOP SINK
24 DRESSING ROOM COUNTERTOP — 2 / A-10.6
25 TICKET COUNTERTOP — 4 / A-10.6
26 COSTUME SHELVES & POLE — 8 / A-10.7
27 TROPHY DISPLAY CASEWORK — 2 / A-10.7
28 AUDIO COUNTERTOP — 4 / A-10.6
29 CONTROL ROOM COUNTERTOP
30 TACK BOARD, SURFACE MOUNTED — 5 / A-10.2
31 CONCESSION COUNTERTOP
32 MARKER BOARD, SURFACE MOUNTED — 3 / A-10.1
33 MOTORIZED PROJECTION SCREEN — 7 / A-10.1
34 WALL MOUNTED SHORT THROW PROJECTOR, S.T.D. — 2 / AV-7.13 — 1 / A-10.1
35 CEILING MOUNTED PROJECTOR, S.T.D. — 5 / AV-7.13
36 DRESSING ROOM MIRROR — 11 / A-10.1
37 ELECTRIC HAND DRYER
38 TOILET PARTITION — 9 / A-10.1
39 URINAL PARTITION — 9 / A-10.1
40 P-LAM FACED ACOUSTICAL WALL PANELS
41 LADDER — 18 / A-10.1
42 ACOUSTIC REFLECTORS
43 1" THICK FABRIC WRAPPED ACOUSTICAL WALL PANELS
44 2" THICK FABRIC WRAPPED ACOUSTICAL WALL PANELS
45 SUSPENDED ACOUSTIC CEILING, SEE REFLECTED CEILING PLAN
46 CANE RAIL — 9 / A-10.2
47 DRESSING ROOM SHELF
48 P-LAM WALL CAP TO MATCH ACOUSTIC REFLECTORS

INTERIOR ELEVATION GENERAL NOTES

1. NOTES AND SYMBOLS ARE TO APPLY AT ALL AREAS OF SIMILAR GRAPHI REPRESENTATION. SUCH INDICATIONS MAY BE LIMITED TO PROMOTE CLARITY OR AVOID REDUNDANCY. NO LIMITATION OF APPLICATION SHALL BE CONSTRUED WITHOUT SPECIFIC NOTATION.
2. REFER TO MECHANICAL DRAWINGS FOR REGISTERS AND VENTS NOT OTHERWISE SHOWN.
3. REFER TO ELECTRICAL DRAWINGS FOR HORNS, SPEAKERS, PULL STATIONS AND OTHER FEATURES NOT OTHERWISE SHOWN.
4. REFER TO THEATRICAL DRAWINGS FOR EQUIPMENTS AND OTHER FEATURES NOT OTHERWISE SHOWN.
5. TYPICAL MOUNTING HEIGHTS OF ACCESSIBLE ELEMENTS AT ACCESSIBLE FIXTURES SEE — 4 / A-10.1
6. FLUSH VALVE HANDLES SHALL BE LOCATED AT THE WIDE SIDE OF ACCESSIBLE STALL.
7. FLOORING & BASE SHALL EXTEND UNDER ACCESSIBLE SINK/LAVATORY BASE CABINETS TO THE WALL. HOT WATER AND DRAINPIPES ACCESSIBLE UNDER LAVATORIES SHALL BE INSULATED OR OTHERWISE COVERED. THERE SHALL BE NO SHARP OR ABRASIVE SURFACES UNDE LAVATORIES.
8. PROVIDE SOLID BLOCKING FOR CABINET, ACCESSORY, OR EQUIPMENT MOUNTING

WALL AND BASE FINISH CODES

NOT ALL CODES MAY APPLY TO THIS SHEET, SEE FINISH & COLOR SCHEDU

W-1	PAINTED GYP. BD. TYP.	B-1	4" COVED RUBBER BASE TYP.
W-2	PAINTED GYP. BD. TO MATCH STUCCO (DARK)	B-2	4" VENTED RUBBER BASE
W-3	PAINTED GYP. BD. TO MATCH STUCCO (LIGHT)	B-3	SHEET VINYL BASE
W-4	METAL PANELS (BLUE)	B-4	FLUID APPLIED EPOXY
W-5	TILE TYP.		
W-6	ACOUSTIC PANELS		
W-7	FIBER REINFORCED PANELS		
W-8	PAINTED GYP. BD. TO MATCH CEILING CL-7		
W-9	FRP PANEL		

LEGEND

TYPICAL WALL CORNERLINE (SEE FLOOR PLAN)

SCHEMATIC WALL (PLAN VIEW) - BEND AT WALL CORNERLINE REPRESENTED ALPHABETICALLY. INTERIOR ELEVATIONS SHOWS WALL IN FLATTENED STATE. NOTE, SCHEMATIC WALL DRAWN AT HALF SCALE U.N.O.

QUATTROCCHI KWOK ARCHITECTS
Main Office:
636 Fifth Street, Santa Rosa, CA 95404
Pleasanton Office:
600 Main Street, Suite E,
Pleasanton, CA 94566
(707) 576-0829

LICENSED ARCHITECT
JIM THEISS
LICENSE # C22643
EXP JUNE 30, 2021
STATE OF CALIFORNIA

SIGNED: AUGUST 13, 2019

FREEDOM HIGH SCHOOL

PERFORMING ARTS AND CTE FACILITIES

1050 NEROLY RD,
OAKLEY, CA 94561

LIBERTY UNION HIGH SCHOOL DISTRICT

ARCH PROJECT NO: 1739.00
DRAWN BY:
DRAWING SCALE: 1/4" = 1'-0"
PTN: 61721-0068

BID SET

AUGUST 13, 2019

SHEET TITLE

BLDG A INTERIOR ELEVATIONS

SHEET NUMBER

A-A7.15

BIM Server: BIMCLOUD-QKA - BIMcloud/1739.00 - Freedom High School/1739.00 FREEDOM HS Performing Arts Center;8/6/2019 4:57 PM

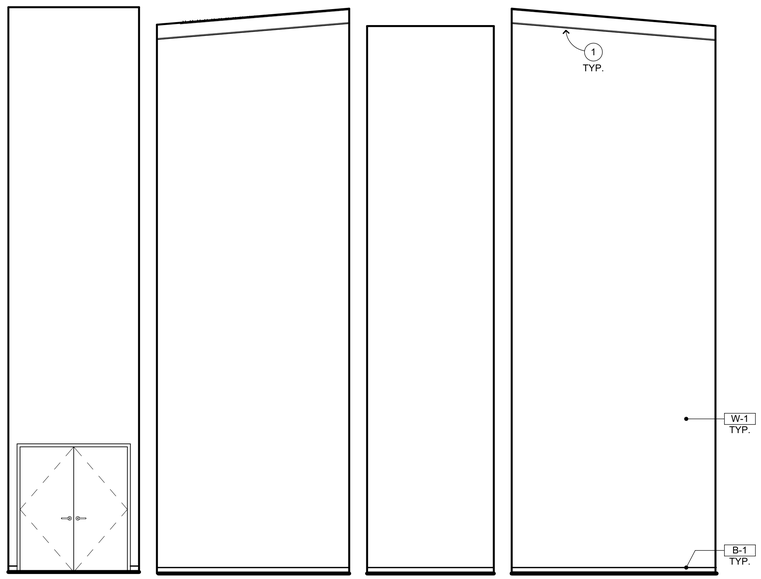

EAST SOUTH WEST NORTH

PIANO STORAGE **142**

1/4" = 1'-0" A-A2.1

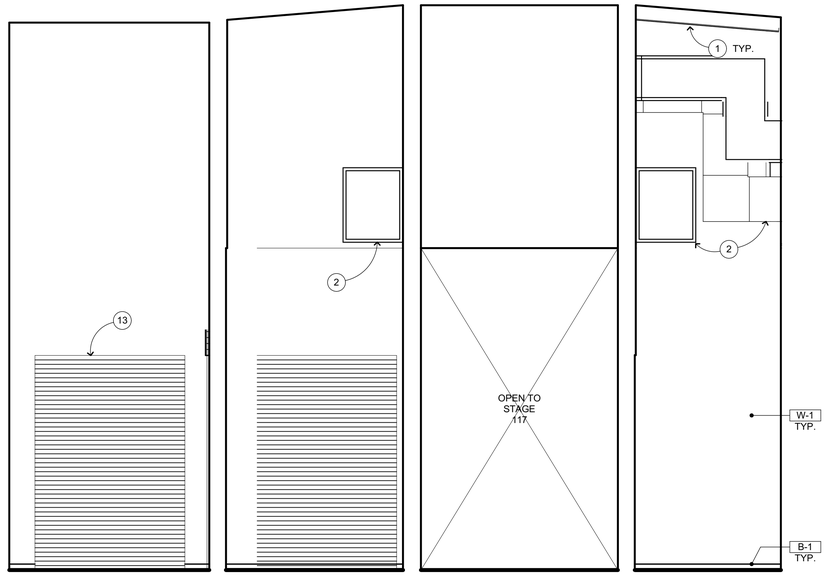

EAST SOUTH WEST NORTH

FOYER **139**

1/4" = 1'-0" A-A2.1

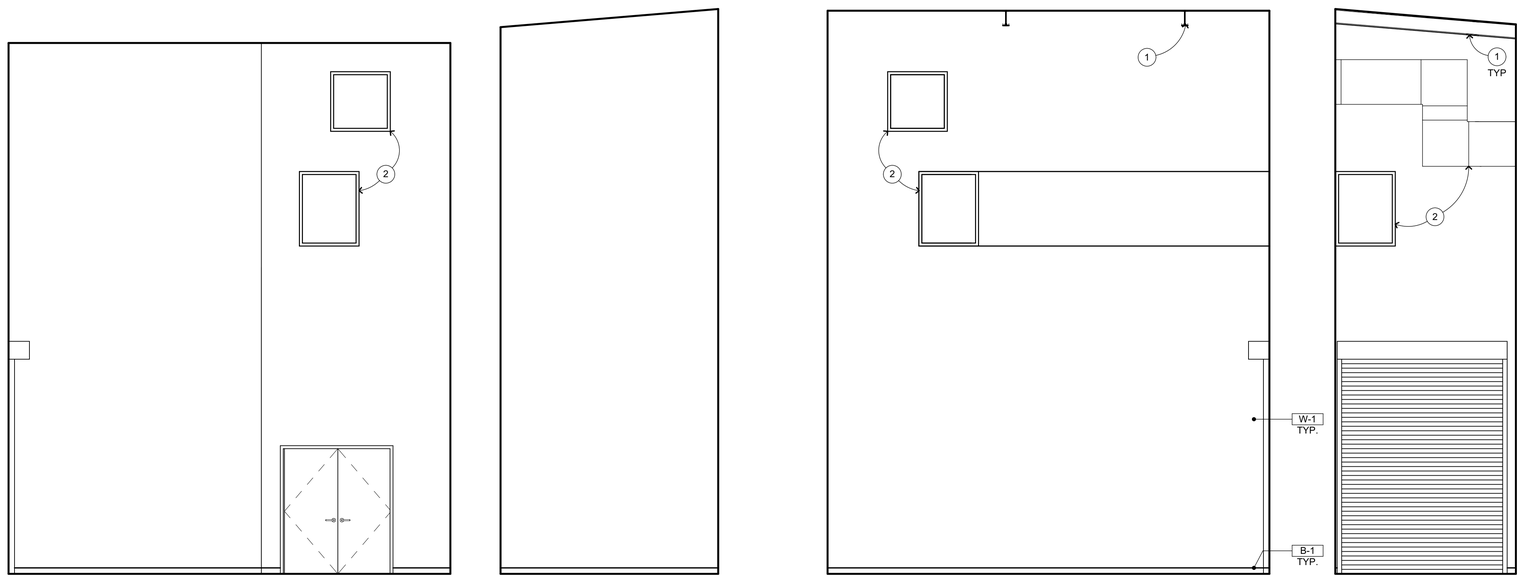

EAST SOUTH WEST NORTH

STORAGE **140**

1/4" = 1'-0" A-A2.1

INTERIOR ELEVATION KEYNOTES

NOT ALL KEYNOTES MAY APPLY TO THIS SHEET

1. STRUCTURAL ITEM, S.S.D.
2. MECHANICAL ITEM, S.M.D.
3. PLUMBING ITEM, S.P.D.
4. ELECTRICAL ITEM, S.E.D.
5. THEATRICAL ITEM, S.T.D.
6. SIGNAGE, SEE ARCHITECTURAL GRAPHICS PLAN
7. FIRE EXTINGUISHER, S.F.P.D. — 1 / A-10.1
8. SEMI RECESSED F.E.C., S.F.P.D. — 1 / A-10.2
9. RECESSED HOSE CABINET, S.F.P.D. — 4 / A-10.2
10. OVERHEAD DOOR — 2 / A-9.6
11. CHAINLINK FENCE AND GATE
12. EXTERIOR TICKETING WINDOW — 17 / A-9.5
13. ROLL UP COILING DOOR — 20 / A-9.5
14. FOLDING PARTITION
15. BULK HEAD
16. TENSION GRID, S.T.D. & S.S.D.
17. CATWALK, S.T.D. & S.S.D.
18. LIGHTING/EQUIPMENT GUARDRAILS, S.T.D. — 9 / A-9.17
19. GUARDRAILS, S.T.D. — 9 / A-9.17
20. HANDRAILS, S.T.D. — 2 / A-10.8
21. ACCESSIBLE HI-LO DRINKING FOUNTAIN W/ BOTTLE FILLER — 6 / A-10.1
22. EMERGENCY EYE WASH STATION
23. COMMERCIAL GRADE MOP SINK
24. DRESSING ROOM COUNTERTOP — 2 / A-10.6
25. TICKET COUNTERTOP — 4 / A-10.6
26. COSTUME SHELVES & POLE — 8 / A-10.7
27. TROPHY DISPLAY CASEWORK — 2 / A-10.7
28. AUDIO COUNTERTOP — 4 / A-10.6
29. CONTROL ROOM COUNTERTOP
30. TACK BOARD, SURFACE MOUNTED — 5 / A-10.2
31. CONCESSION COUNTERTOP
32. MARKER BOARD, SURFACE MOUNTED — 3 / A-10.1
33. MOTORIZED PROJECTION SCREEN — 7 / A-10.1
34. WALL MOUNTED SHORT THROW PROJECTOR, S.T.D. — 2 / AV-7.13 — 1 / A-10.1
35. CEILING MOUNTED PROJECTOR, S.T.D. — 5 / AV-7.13
36. DRESSING ROOM MIRROR — 11 / A-10.1
37. ELECTRIC HAND DRYER
38. TOILET PARTITION — 9 / A-10.1
39. URINAL PARTITION — 9 / A-10.1
40. P-LAM FACED ACOUSTICAL WALL PANELS
41. LADDER — 18 / A-10.1
42. ACOUSTIC REFLECTORS
43. 1" THICK FABRIC WRAPPED ACOUSTICAL WALL PANELS
44. 2" THICK FABRIC WRAPPED ACOUSTICAL WALL PANELS
45. SUSPENDED ACOUSTIC CEILING, SEE REFLECTED CEILING PLAN
46. CANE RAIL — 9 / A-10.2
47. DRESSING ROOM SHELF
48. P-LAM WALL CAP TO MATCH ACOUSTIC REFLECTORS

INTERIOR ELEVATION GENERAL NOTES

1. NOTES AND SYMBOLS ARE TO APPLY AT ALL AREAS OF SIMILAR GRAPHI REPRESENTATION. SUCH INDICATIONS MAY BE LIMITED TO PROMOTE CLARITY OR AVOID REDUNDANCY. NO LIMITATION OF APPLICATION SHALL BE CONSTRUED WITHOUT SPECIFIC NOTATION.
2. REFER TO MECHANICAL DRAWINGS FOR REGISTERS AND VENTS NOT OTHERWISE SHOWN.
3. REFER TO ELECTRICAL DRAWINGS FOR HORNS, SPEAKERS, PULL STATIONS AND OTHER FEATURES NOT OTHERWISE SHOWN.
4. REFER TO THEATRICAL DRAWINGS FOR EQUIPMENTS AND OTHER FEATURES NOT OTHERWISE SHOWN.
5. TYPICAL MOUNTING HEIGHTS OF ACCESSIBLE ELEMENTS AT ACCESSIBLE FIXTURES SEE — 4 / A-10.1
6. FLUSH VALVE HANDLES SHALL BE LOCATED AT THE WIDE SIDE OF ACCESSIBLE STALL.
7. FLOORING & BASE SHALL EXTEND UNDER ACCESSIBLE SINK/LAVATORY BASE CABINETS TO THE WALL. HOT WATER AND DRAINPIPES ACCESSIBLE UNDER LAVATORIES SHALL BE INSULATED OR OTHERWISE COVERED. THERE SHALL BE NO SHARP OR ABRASIVE SURFACES UNDE LAVATORIES.
8. PROVIDE SOLID BLOCKING FOR CABINET, ACCESSORY, OR EQUIPMENT MOUNTING

WALL AND BASE FINISH CODES

NOT ALL CODES MAY APPLY TO THIS SHEET, SEE FINISH & COLOR SCHEDU

W-1	PAINTED GYP. BD. TYP.	B-1	4" COVED RUBBER BASE TYP.
W-2	PAINTED GYP. BD. TO MATCH STUCCO (DARK)	B-2	4" VENTED RUBBER BASE
W-3	PAINTED GYP. BD. TO MATCH STUCCO (LIGHT)	B-3	SHEET VINYL BASE
W-4	METAL PANELS (BLUE)	B-4	FLUID APPLIED EPOXY
W-5	TILE TYP.		
W-6	ACOUSTIC PANELS		
W-7	FIBER REINFORCED PANELS		
W-8	PAINTED GYP. BD. TO MATCH CEILING CL-7		
W-9	FRP PANEL		

LEGEND

TYPICAL WALL CORNERLINE (SEE FLOOR PLAN)

SCHEMATIC WALL (PLAN VIEW) - BEND AT WALL CORNERLINE REPRESENTED ALPHABETICALLY. INTERIOR ELEVATIONS SHOWS WALL IN FLATTENED STATE. NOTE, SCHEMATIC WALL DRAWN AT HALF SCALE U.N.O.

QUATTROCCHI KWOK ARCHITECTS
Main Office:
636 Fifth Street, Santa Rosa, CA 95404
Pleasanton Office:
600 Main Street, Suite E,
Pleasanton, CA 94566
(707) 576-0829

LICENSED ARCHITECT
JIM THEISS
LICENSE # C22643
EXP JUNE 30, 2021
STATE OF CALIFORNIA

SIGNED: AUGUST 13, 2019

FREEDOM HIGH SCHOOL

PERFORMING ARTS AND CTE FACILITIES

1050 NEROLY RD,
OAKLEY, CA 94561

LIBERTY UNION HIGH SCHOOL DISTRICT

ARCH PROJECT NO:	1739.00
DRAWN BY:	
DRAWING SCALE:	1/4" = 1'-0"
PTN:	61721-0068

BID SET

AUGUST 13, 2019

SHEET TITLE

BLDG A INTERIOR ELEVATIONS

SHEET NUMBER

A-A7.16

BIM Server: BIMCLOUD-QKA - BIMcloud/1739.00 - Freedom High School/1739.00 FREEDOM HS Performing Arts Center;8/6/2019;4:58 PM

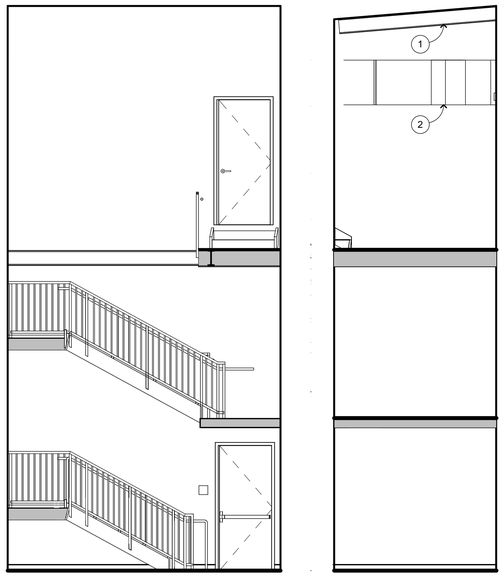

EAST SOUTH WEST NORTH

STAIR **143**

1/4" = 1'-0" A-A2.1

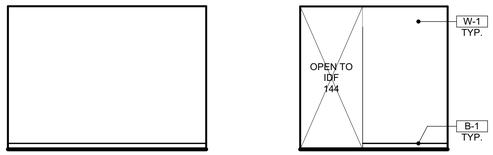

WEST

NORTH

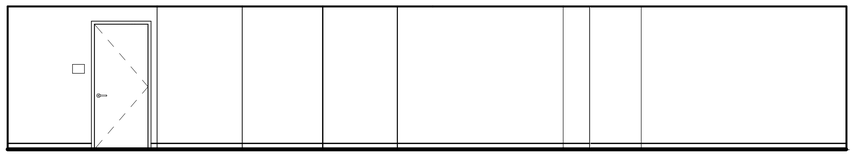

WEST

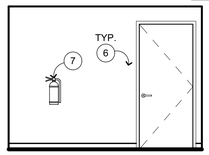

NORTH

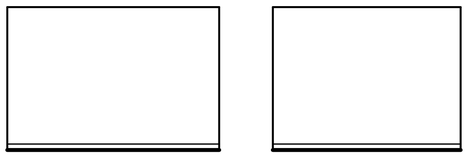

EAST

SOUTH



EAST

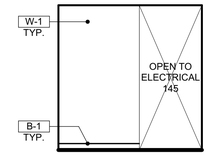

SOUTH

ELECTRICAL **145**

1/4" = 1'-0" A-A2.1

IDF **144**

1/4" = 1'-0" A-A2.1

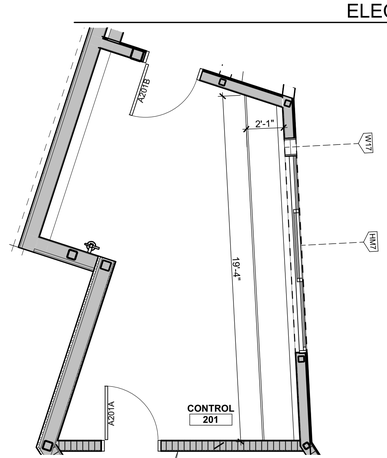

CONTROL BOOTH ENLARGED PLAN 1

1/4" = 1'-0"

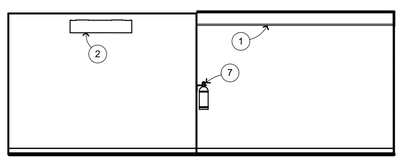

WEST

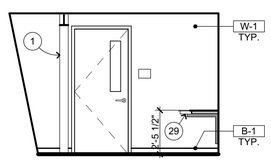

NORTH

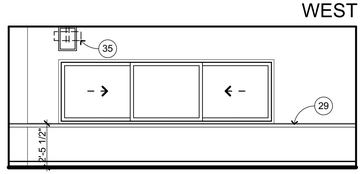

EAST

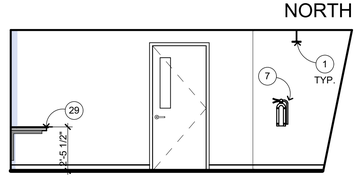

SOUTH

CONTROL **201**

1/4" = 1'-0" A-A2.2

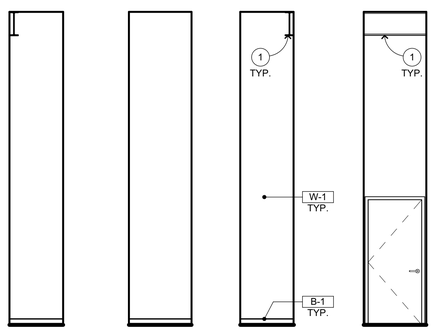

EAST SOUTH WEST NORTH

SPRINKLER RISER **146**

1/4" = 1'-0" A-A2.1

INTERIOR ELEVATION KEYNOTES

NOT ALL KEYNOTES MAY APPLY TO THIS SHEET

1. STRUCTURAL ITEM, S.S.D.
2. MECHANICAL ITEM, S.M.D.
3. PLUMBING ITEM, S.P.D.
4. ELECTRICAL ITEM, S.E.D.
5. THEATRICAL ITEM, S.T.D.
6. SIGNAGE, SEE ARCHITECTURAL GRAPHICS PLAN
7. FIRE EXTINGUISHER, S.F.P.D. — 1 / A-10.1
8. SEMI RECESSED F.E.C., S.F.P.D. — 1 / A-10.2
9. RECESSED HOSE CABINET, S.F.P.D. — 4 / A-10.2
10. OVERHEAD DOOR — 2 / A-9.6
11. CHAINLINK FENCE AND GATE
12. EXTERIOR TICKETING WINDOW — 17 / A-9.5
13. ROLL UP COILING DOOR — 20 / A-9.5
14. FOLDING PARTITION
15. BULK HEAD
16. TENSION GRID, S.T.D. & S.S.D.
17. CATWALK, S.T.D. & S.S.D.
18. LIGHTING/EQUIPMENT GUARDRAILS, S.T.D. — 9 / A-9.17
19. GUARDRAILS, S.T.D. — 9 / A-9.17
20. HANDRAILS, S.T.D. — 2 / A-10.8
21. ACCESSIBLE HI-LO DRINKING FOUNTAIN W/ BOTTLE FILLER — 6 / A-10.1
22. EMERGENCY EYE WASH STATION
23. COMMERCIAL GRADE MOP SINK
24. DRESSING ROOM COUNTERTOP — 2 / A-10.6
25. TICKET COUNTERTOP — 4 / A-10.6
26. COSTUME SHELVES & POLE — 8 / A-10.7
27. TROPHY DISPLAY CASEWORK — 2 / A-10.7
28. AUDIO COUNTERTOP — 4 / A-10.6
29. CONTROL ROOM COUNTERTOP
30. TACK BOARD, SURFACE MOUNTED — 5 / A-10.2
31. CONCESSION COUNTERTOP
32. MARKER BOARD, SURFACE MOUNTED — 3 / A-10.1
33. MOTORIZED PROJECTION SCREEN — 7 / A-10.1
34. WALL MOUNTED SHORT THROW PROJECTOR, S.T.D. — 2 / AV-7.13, 1 / A-10.1
35. CEILING MOUNTED PROJECTOR, S.T.D. — 5 / AV-7.13
36. DRESSING ROOM MIRROR — 11 / A-10.1
37. ELECTRIC HAND DRYER
38. TOILET PARTITION — 9 / A-10.1
39. URINAL PARTITION — 9 / A-10.1
40. P-LAM FACED ACOUSTICAL WALL PANELS — 18 / A-10.1
41. LADDER
42. ACOUSTIC REFLECTORS
43. 1" THICK FABRIC WRAPPED ACOUSTICAL WALL PANELS
44. 2" THICK FABRIC WRAPPED ACOUSTICAL WALL PANELS
45. SUSPENDED ACOUSTIC CEILING, SEE REFLECTED CEILING PLAN
46. CANE RAIL — 9 / A-10.2
47. DRESSING ROOM SHELF
48. P-LAM WALL CAP TO MATCH ACOUSTIC REFLECTORS

INTERIOR ELEVATION GENERAL NOTES

1. NOTES AND SYMBOLS ARE TO APPLY AT ALL AREAS OF SIMILAR GRAPHI REPRESENTATION. SUCH INDICATIONS MAY BE LIMITED TO PROMOTE CLARITY OR AVOID REDUNDANCY. NO LIMITATION OF APPLICATION SHALL BE CONSTRUED WITHOUT SPECIFIC NOTATION.
2. REFER TO MECHANICAL DRAWINGS FOR REGISTERS AND VENTS NOT OTHERWISE SHOWN.
3. REFER TO ELECTRICAL DRAWINGS FOR HORNS, SPEAKERS, PULL STATIONS AND OTHER FEATURES NOT OTHERWISE SHOWN.
4. REFER TO THEATRICAL DRAWINGS FOR EQUIPMENTS AND OTHER FEATURES NOT OTHERWISE SHOWN.
5. TYPICAL MOUNTING HEIGHTS OF ACCESSIBLE ELEMENTS AT ACCESSIBLE FIXTURES SEE — 4 / A-10.1
6. FLUSH VALVE HANDLES SHALL BE LOCATED AT THE WIDE SIDE OF ACCESSIBLE STALL.
7. FLOORING & BASE SHALL EXTEND UNDER ACCESSIBLE SINK/LAVATORY BASE CABINETS TO THE WALL. HOT WATER AND DRAINPIPES ACCESSIBLE UNDER LAVATORIES SHALL BE INSULATED OR OTHERWISE COVERED. THERE SHALL BE NO SHARP OR ABRASIVE SURFACES UNDE LAVATORIES.
8. PROVIDE SOLID BLOCKING FOR CABINET, ACCESSORY, OR EQUIPMENT MOUNTING

WALL AND BASE FINISH CODES

NOT ALL CODES MAY APPLY TO THIS SHEET, SEE FINISH & COLOR SCHEDU

- W-1 PAINTED GYP. BD. TYP.
- W-2 PAINTED GYP. BD. TO MATCH STUCCO (DARK)
- W-3 PAINTED GYP. BD. TO MATCH STUCCO (LIGHT)
- W-4 METAL PANELS (BLUE)
- W-5 TILE TYP.
- W-6 ACOUSTIC PANELS
- W-7 FIBER REINFORCED PANELS
- W-8 PAINTED GYP. BD. TO MATCH CEILING CL-7
- W-9 FRP PANEL
- B-1 4" COVED RUBBER BASE TYP.
- B-2 4" VENTED RUBBER BASE
- B-3 SHEET VINYL BASE
- B-4 FLUID APPLIED EPOXY

LEGEND

TYPICAL WALL CORNERLINE (SEE FLOOR PLAN)

SCHEMATIC WALL (PLAN VIEW) - BEND AT WALL CORNERLINE REPRESENTED ALPHABETICALLY. INTERIOR ELEVATIONS SHOWS WALL IN FLATTENED STATE. NOTE, SCHEMATIC WALL DRAWN AT HALF SCALE U.N.O.

QUATTROCCHI KWOK ARCHITECTS
Main Office:
636 Fifth Street, Santa Rosa, CA 95404
Pleasanton Office:
600 Main Street, Suite E,
Pleasanton, CA 94566
(707) 576-0829

LICENSED ARCHITECT
JIM THEISS
LICENSE # C22643
EXP JUNE 30, 2021
STATE OF CALIFORNIA

SIGNED: AUGUST 13, 2019

FREEDOM HIGH SCHOOL

PERFORMING ARTS AND CTE FACILITIES

1050 NEROLY RD,
OAKLEY, CA 94561

LIBERTY UNION HIGH SCHOOL DISTRICT

ARCH PROJECT NO: 1739.00
DRAWN BY:
DRAWING SCALE: 1/4" = 1'-0"
PTN: 61721-0068

BID SET

AUGUST 13, 2019

SHEET TITLE

BLDG A INTERIOR ELEVATIONS

SHEET NUMBER

A-A7.17

BIM Server: BIMCLOUD-QKA - BIMcloud/1739.00 - Freedom High School/1739.00 FREEDOM HS Performing Arts Center:8/6/2019 5:00 PM

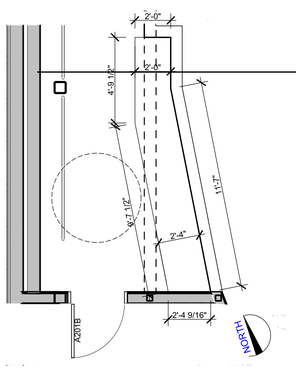

ENLARGED FLOOR PLANS @ AUDIO BOOTH 1

1/4" = 1'-0"

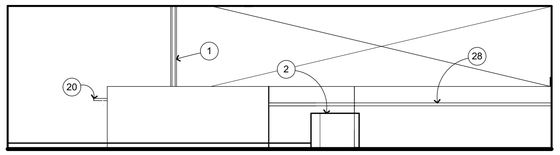

EAST

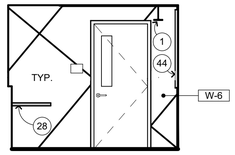

SOUTH

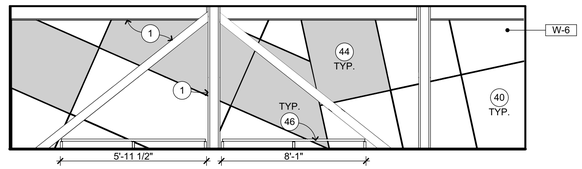

WEST

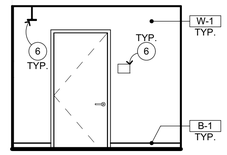

NORTH

AUDIO **202**

1/4" = 1'-0" A-A2.2

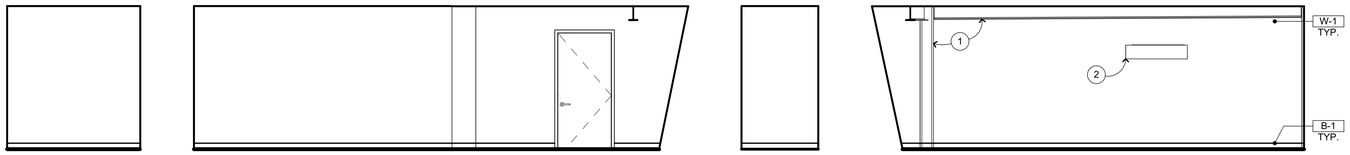

EAST SOUTH WEST NORTH

AMP ROOM **203**

1/4" = 1'-0" A-A2.2

EAST SOUTH WEST NORTH

STAIR **204**

1/4" = 1'-0" A-A2.2

INTERIOR ELEVATION KEYNOTES

NOT ALL KEYNOTES MAY APPLY TO THIS SHEET

1. STRUCTURAL ITEM, S.S.D.
2. MECHANICAL ITEM, S.M.D.
3. PLUMBING ITEM, S.P.D.
4. ELECTRICAL ITEM, S.E.D.
5. THEATRICAL ITEM, S.T.D.
6. SIGNAGE, SEE ARCHITECTURAL GRAPHICS PLAN
7. FIRE EXTINGUISHER, S.F.P.D. — 1 / A-10.1
8. SEMI RECESSED F.E.C., S.F.P.D. — 1 / A-10.2
9. RECESSED HOSE CABINET, S.F.P.D. — 4 / A-10.2
10. OVERHEAD DOOR — 2 / A-9.6
11. CHAINLINK FENCE AND GATE
12. EXTERIOR TICKETING WINDOW — 17 / A-9.5
13. ROLL UP COILING DOOR — 20 / A-9.5
14. FOLDING PARTITION
15. BULK HEAD
16. TENSION GRID, S.T.D. & S.S.D.
17. CATWALK, S.T.D. & S.S.D.
18. LIGHTING/EQUIPMENT GUARDRAILS, S.T.D. — 9 / A-9.17
19. GUARDRAILS, S.T.D. — 9 / A-9.17
20. HANDRAILS, S.T.D. — 2 / A-10.8
21. ACCESSIBLE HI-LO DRINKING FOUNTAIN W/ BOTTLE FILLER — 6 / A-10.1
22. EMERGENCY EYE WASH STATION
23. COMMERCIAL GRADE MOP SINK
24. DRESSING ROOM COUNTERTOP — 2 / A-10.6
25. TICKET COUNTERTOP — 4 / A-10.6
26. COSTUME SHELVES & POLE — 8 / A-10.7
27. TROPHY DISPLAY CASEWORK — 2 / A-10.7
28. AUDIO COUNTERTOP — 4 / A-10.6
29. CONTROL ROOM COUNTERTOP
30. TACK BOARD, SURFACE MOUNTED — 5 / A-10.2
31. CONCESSION COUNTERTOP
32. MARKER BOARD, SURFACE MOUNTED — 3 / A-10.1
33. MOTORIZED PROJECTION SCREEN — 7 / A-10.1
34. WALL MOUNTED SHORT THROW PROJECTOR, S.T.D. — 2 / AV-7.13
35. CEILING MOUNTED PROJECTOR, S.T.D. — 5 / AV-7.13
36. DRESSING ROOM MIRROR — 1 / A-10.1; 11 / A-10.1
37. ELECTRIC HAND DRYER
38. TOILET PARTITION — 9 / A-10.1
39. URINAL PARTITION — 9 / A-10.1
40. P-LAM FACED ACOUSTICAL WALL PANELS
41. LADDER — 18 / A-10.1
42. ACOUSTIC REFLECTORS
43. 1" THICK FABRIC WRAPPED ACOUSTICAL WALL PANELS
44. 2" THICK FABRIC WRAPPED ACOUSTICAL WALL PANELS
45. SUSPENDED ACOUSTIC CEILING, SEE REFLECTED CEILING PLAN
46. CANE RAIL — 9 / A-10.2
47. DRESSING ROOM SHELF
48. P-LAM WALL CAP TO MATCH ACOUSTIC REFLECTORS

INTERIOR ELEVATION GENERAL NOTES

1. NOTES AND SYMBOLS ARE TO APPLY AT ALL AREAS OF SIMILAR GRAPHI REPRESENTATION. SUCH INDICATIONS MAY BE LIMITED TO PROMOTE CLARITY OR AVOID REDUNDANCY. NO LIMITATION OF APPLICATION SHALL BE CONSTRUED WITHOUT SPECIFIC NOTATION.
2. REFER TO MECHANICAL DRAWINGS FOR REGISTERS AND VENTS NOT OTHERWISE SHOWN.
3. REFER TO ELECTRICAL DRAWINGS FOR HORNS, SPEAKERS, PULL STATIONS AND OTHER FEATURES NOT OTHERWISE SHOWN.
4. REFER TO THEATRICAL DRAWINGS FOR EQUIPMENTS AND OTHER FEATURES NOT OTHERWISE SHOWN.
5. TYPICAL MOUNTING HEIGHTS OF ACCESSIBLE ELEMENTS AT ACCESSIBLE FIXTURES SEE — 4 / A-10.1
6. FLUSH VALVE HANDLES SHALL BE LOCATED AT THE WIDE SIDE OF ACCESSIBLE STALL.
7. FLOORING & BASE SHALL EXTEND UNDER ACCESSIBLE SINK/LAVATORY BASE CABINETS TO THE WALL. HOT WATER AND DRAINPIPES ACCESSIBLE UNDER LAVATORIES SHALL BE INSULATED OR OTHERWISE COVERED. THERE SHALL BE NO SHARP OR ABRASIVE SURFACES UNDE LAVATORIES.
8. PROVIDE SOLID BLOCKING FOR CABINET, ACCESSORY, OR EQUIPMENT MOUNTING

WALL AND BASE FINISH CODES

NOT ALL CODES MAY APPLY TO THIS SHEET, SEE FINISH & COLOR SCHEDU

W-1	PAINTED GYP. BD. TYP.	B-1	4" COVED RUBBER BASE TYP.
W-2	PAINTED GYP. BD. TO MATCH STUCCO (DARK)	B-2	4" VENTED RUBBER BASE
W-3	PAINTED GYP. BD. TO MATCH STUCCO (LIGHT)	B-3	SHEET VINYL BASE
W-4	METAL PANELS (BLUE)	B-4	FLUID APPLIED EPOXY
W-5	TILE TYP.		
W-6	ACOUSTIC PANELS		
W-7	FIBER REINFORCED PANELS		
W-8	PAINTED GYP. BD. TO MATCH CEILING CL-7		
W-9	FRP PANEL		

LEGEND

TYPICAL WALL CORNERLINE (SEE FLOOR PLAN)

SCHEMATIC WALL (PLAN VIEW) - BEND AT WALL CORNERLINE REPRESENTED ALPHABETICALLY. INTERIOR ELEVATIONS SHOWS WALL IN FLATTENED STATE. NOTE, SCHEMATIC WALL DRAWN AT HALF SCALE U.N.O.

QUATTROCCHI KWOK ARCHITECTS
Main Office:
636 Fifth Street, Santa Rosa, CA 95404
Pleasanton Office:
600 Main Street, Suite E,
Pleasanton, CA 94566
(707) 576-0829

LICENSED ARCHITECT
JIM THEISS
LICENSE # C22643
EXP JUNE 30, 2021
STATE OF CALIFORNIA

SIGNED: AUGUST 13, 2019

FREEDOM HIGH SCHOOL

PERFORMING ARTS AND CTE FACILITIES

1050 NEROLY RD,
OAKLEY, CA 94561

LIBERTY UNION HIGH SCHOOL DISTRICT

ARCH PROJECT NO: 1739.00
DRAWN BY:
DRAWING SCALE:
PTN: 61721-0068

BID SET

AUGUST 13, 2019

SHEET TITLE

BLDG A INTERIOR ELEVATIONS

SHEET NUMBER

A-A7.18

BIM Server: BIMCLOUD-QKA - BIMcloud/1739.00 - Freedom High School/1739.00 FREEDOM HS Performing Arts Center;8/6/2019;5:02 PM

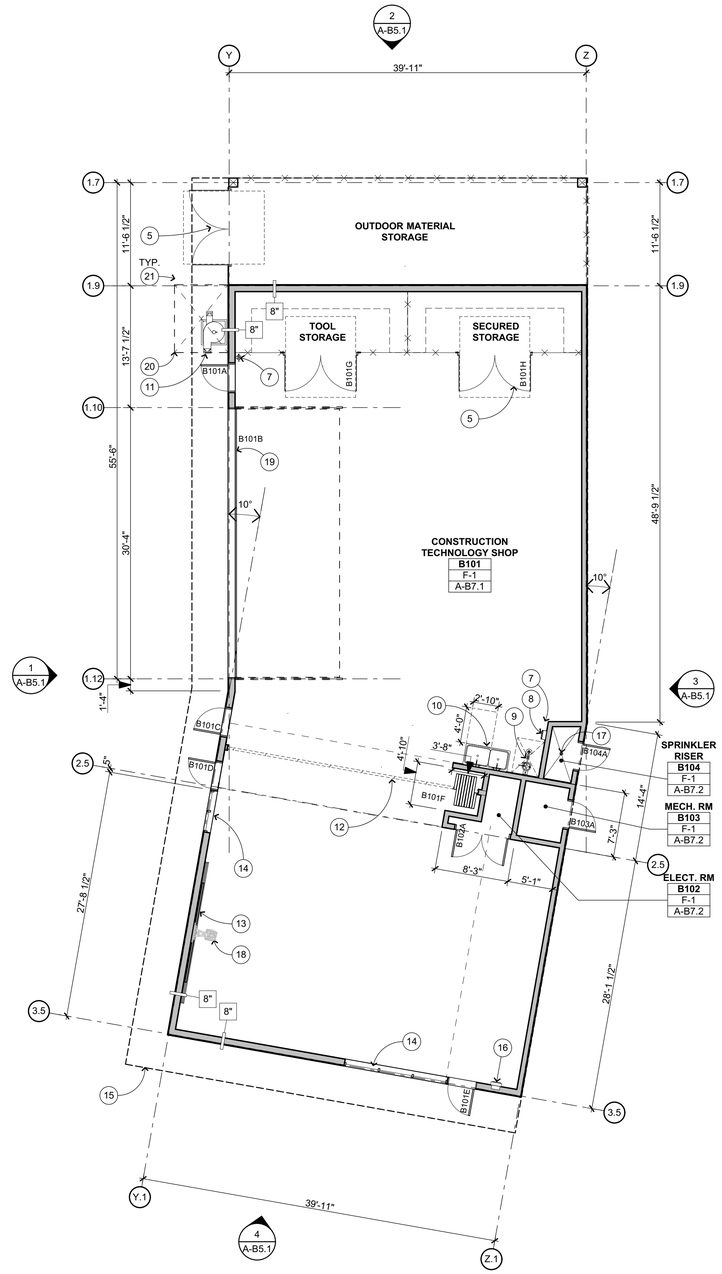

FIRST FLOOR PLAN 1

1/8" = 1'-0"

NORTH

FLOOR PLAN KEYNOTES

NOT ALL KEYNOTES MAY APPLY TO THIS SHEET

1. STRUCTURAL ITEM, S.S.D.
2. MECHANICAL ITEM, S.M.D.
3. PLUMBING ITEM, S.P.D.
4. ELECTRICAL ITEM, S.E.D.
5. CHAINLINK FENCE W/ GATE, S.L.D.
6. NOT USED
7. SURFACE MOUNTED F.E. — 8 / A-10.3
8. ELECTRIC HAND DRYER
9. EMERGENCY EYE WASH STATION
10. COMMERCIAL GRADE SHOP SINK
11. DUST COLLECTOR
12. FOLDING PARTITION FOR DUST ISOLATION (ALTERNATE) — 15 / A-10.3
13. MARKERBOARD & MOTORIZED PROJECTION SCREEN ABOVE
14. HM WINDOW AND FRAME, SEE WINDOW SCHEDULE
15. ROOF ABOVE
16. SEMI-RECESSED FIRE EXTINGUISHER CABINET — 4 / A-10.3
17. FLOOR DRAIN
18. WALL MOUNTED SHORT THROW PROJECTOR, S.T.D. — 2 / AV-7.13, 8 / A-10.3
19. MOTORIZED SECTIONAL OVERHEAD DOOR, SEE DOOR SCHEDULE
20. DUST COLLECTOR MOUNTING PAD, S.S.D., S.M.D.
21. BOLLARDS

WALL TYPE LEGEND

NOTES:
ALL WOOD FRAMING IS 6" STUDS, U.O.N., S.S.D.
ALL WALLS TO BE ACOUSTIC , U.O.N.

- WOOD FRAMING, NON-RATED, INSULATED
- # FRAMING STUD SIZE
- # ACOUSTICAL RATING

FLOOR FINISH CODES

F-1 SEALED CONCRETE W/ RUBBER BASE

NOTE:
FOR FLOOR FINISH TRANSITIONS SEE

KEY PLAN

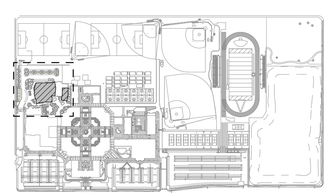

QUATTROCCHI KWOK ARCHITECTS
Main Office:
636 Fifth Street, Santa Rosa, CA 95404
Pleasanton Office:
600 Main Street, Suite E,
Pleasanton, CA 94566
(707) 576-0829

LICENSED ARCHITECT
JIM THEISS
LICENSE # C22643
EXP JUNE 30, 2021
STATE OF CALIFORNIA

SIGNED: JUNE 28, 2019

FREEDOM HIGH SCHOOL

PERFORMING ARTS AND CTE FACILITIES

1050 NEROLY RD
OAKLEY, CA 94561

LIBERTY UNION HIGH SCHOOL DISTRICT

ARCH PROJECT NO: 1739.00
DRAWN BY:
DRAWING SCALE:
PTN: 61721-0068

BID SET

AUGUST 13, 2019

SHEET TITLE

BLDG B FIRST FLOOR PLAN

SHEET NUMBER

A-B2.1

BIM Server: BIMCLOUD-QKA - BIMcloud/1739.00 - Freedom High School/1739.00 FREEDOM HS Construction Technology Building 6013;8/6/2019;3:06 PM

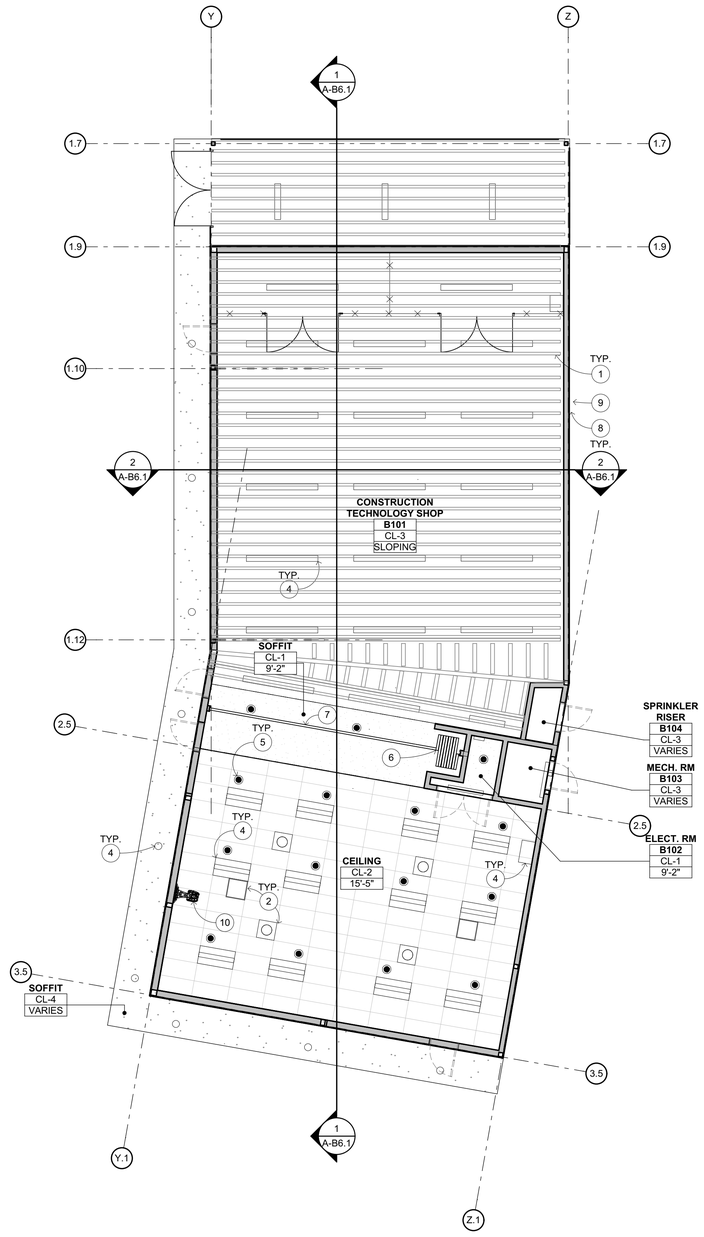

REFLECTED CEILING PLAN 1

1/8" = 1'-0"

NORTH

REFLECTED CEILING PLAN KEYNOTES

NOT ALL KEYNOTES MAY APPLY TO THIS SHEET

1. STRUCTURAL ITEM, S.S.D.
2. MECHANICAL ITEM, S.M.D.
3. PLUMBING ITEM, S.P.D.
4. ELECTRICAL ITEM, S.E.D.
5. FIRE SPRINKLERS, S.F.P.D.
6. FOLDING PARTITION FOR DUST ISOLATION (ALTERNATE) — 14 / A-10.3
7. FOLDING PARTITION TRACK
8. RAIN WATER LEADER — 4 / A-9.13
9. GUTTER — 4 / A-9.13
10. WALL MOUNTED SHORT THROW PROJECTOR, S.T.D. — 2 / AV-7.13 — 8 / A-10.3

REFLECTED CEILING PLAN GENERAL NOTES

1. NOTES & SYMBOLS ARE TO APPLY TO ALL AREAS OF SIMILAR GRAPHIC REPRESENTATION. SUCH INDICATIONS MAYBE LIMITED TO PROMOTE CLARITY OR AVOID REDUNDACY. NO LIMITATION OF APPLICATION SHALL BE CONSTRUED WITHOUT SPECIFIC NOTATION.
2. PENDANT LIGHT FIXTURE LOCATION DIMENSIONS ARE NOMINAL. VERIFY IN FIELD TO MAINTAIN 45° SWING CLEARANCES TO FIXED ELEMENTS. — - / E-7.2
3. S.E.D. FOR HORNS, SPEAKERS, PULL STATIONS, LIGHT FIXTURES AND OTHER FEATURES NOT OTHERWISE SHOWN.
4. S.E.D. FOR EXIT SIGNS & EMERGENCY LIGHTING CONDITIONS.
5. S.M.D. FOR PIPING, REGISTERS & VENTS NOT OTHERWISE SHOWN. MECHANICAL DUCT LOCATION DIMENSIONS ARE NOMINAL. VERIFY IN FIELD TO MAINTAIN CLEARANCES TO FIXED ELEMENTS.
6. CBC TABLE 601- ROOFS AND THEIR MEMBERS OTHER THAN THE STRUCTURAL FRAME MAY BE OF UNPROTECTED NON-COMBUSTIBLE MATERIALS WHEN EVERY PART OF ROOF FRAMING INCLUDING THE STRUCTURAL FRAME IS 20 FEET OR MORE ABOVE THE FLOOR IMMEDIATELY BELOW

REFLECTED CEILING PLAN LEGEND

10'-0"
ROOM NAME
ROOM #
CL-XX
X-X"

CL-XX REFERS TO CEILING FINISH CODE SEE BELOW. X-X" REFERS TO FINISHED CEILING HEIGHT AFF. WHERE CEILING HEIGHT IS INDICATED AS "OPEN" OR " - ", ROOM IS OPEN TO STRUCTURE ABOVE. FOR CEILING CONFIGURATION & HEIGHT WHERE CEILING HEIGHT IS INDICATED AS CURVED, SLOPING, OR VARIES, REFER TO SECTION DRAWINGS.

GYPSUM BOARD, SEE FINISH CODE

EXPOSED ROOF/FLOOR STRUCTURE ABOVE

2'x2' SUSPENDED CEILING SYSTEM W/ ACOUSTIC TILE, SEE FINISH CODES

ELECTRICAL ITEMS, S.E.D.

MECHANICAL ITEMS, S.M.D.

FIRE SPRINKLERS, S.F.P.D.

CEILING FINISH CODES

CL-1	GYPSUM BOARD o/ FRAMING PER
CL-2	ACOUSTIC TILE 4x2
CL-3	NO CEILING - OPEN TO STRUCTURE ABOVE
CL-4	EXTERIOR CEMENT PLASTER — 10 / A-9.13 — 4 / A-9.1

KEY PLAN

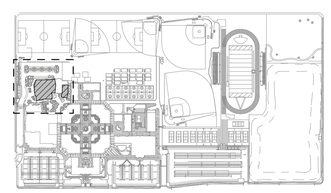

QUATTROCCHI KWOK ARCHITECTS
Main Office:
636 Fifth Street, Santa Rosa, CA 95404
Pleasanton Office:
600 Main Street, Suite E,
Pleasanton, CA 94566
(707) 576-0829

LICENSED ARCHITECT
JIM THEISS
LICENSE # C22643
EXP JUNE 30, 2021
STATE OF CALIFORNIA

SIGNED: JUNE 28, 2019

FREEDOM HIGH SCHOOL

PERFORMING ARTS AND CTE FACILITIES

1050 NEROLY RD
OAKLEY, CA 94561

LIBERTY UNION HIGH SCHOOL DISTRICT

ARCH PROJECT NO:	1739.00
DRAWN BY:	
DRAWING SCALE:	
PTN:	61721-0068

BID SET

AUGUST 13, 2019

SHEET TITLE

BLDG B REFLECTED CEILING PLAN

SHEET NUMBER

A-B3.1

BIM Server: BIMCLOUD-QKA - BIMcloud/1739.00 - Freedom High School/1739.00 FREEDOM HS Construction Technology Building 6013:8/6/2019 3:06 PM

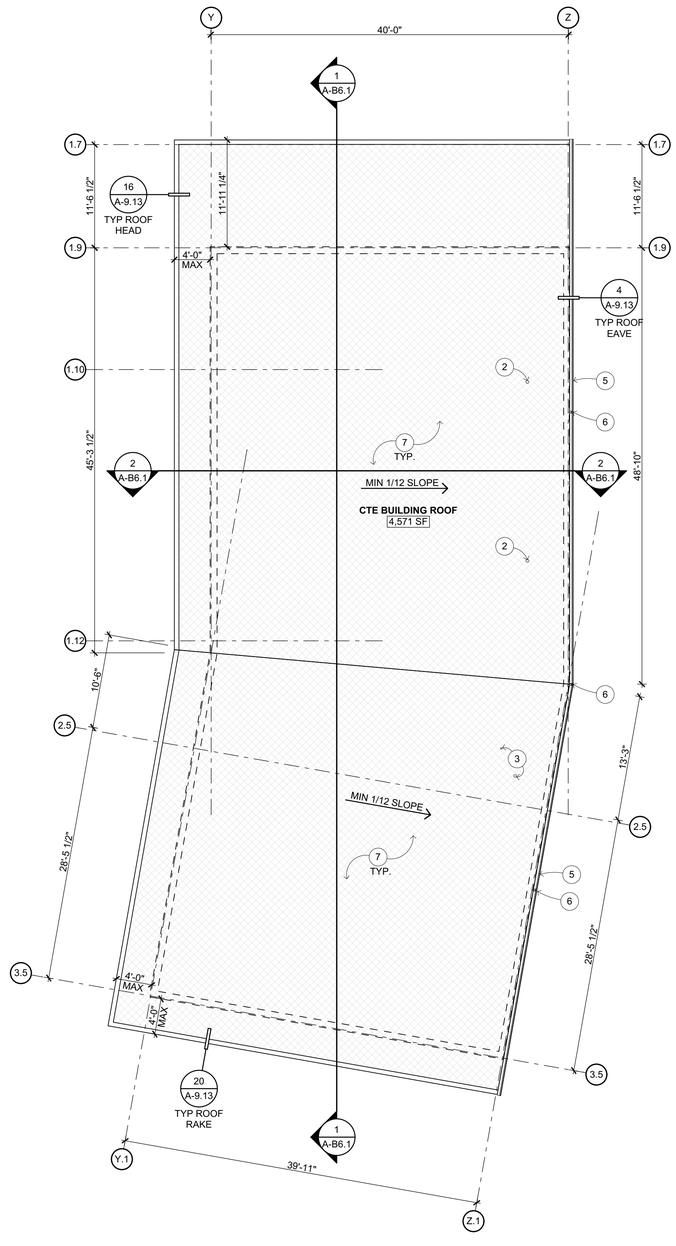

ROOF PLAN 1

1/8" = 1'-0"

ROOF PLAN KEYNOTES

NOT ALL KEYNOTES MAY APPLY TO THIS SHEET

1. STRUCTURAL ITEM, S.S.D.
2. MECHANICAL ITEM, S.M.D.
3. PLUMBING ITEM, S.P.D.
4. ELECTRICAL ITEM, S.E.D.
5. GUTTER — 2 A-9.14
6. RAIN WATER LEADER — 3 A-9.14, 4 A-9.14 AS OCCURS, 1 A-9.13
7. MODIFIED BITUMEN ROOFING O/ WOOD DECK

ROOF PLAN GENERAL NOTES

1. MINIMUM THICKNESS OF RIGID INSULATION TO BE 1" AT LOW POINT OF ROOF. SLOPE MIN. 1/4": 12" TO DRAIN. ALL RIGID INSULATION OVERLAID WITH WITH 1/2" PERLITE BOARD.
2. ALL ROOFING TO BE CLASS A.
3. REFER TO MECHANICAL AND ELECTRICAL DRAWINGS FOR ROOF PENETRATION LOCATIONS NOT OTHERWISE INDICATED, TYPICAL.
4. MECHANICAL UNIT MOUNTING CURBS S.M.D.
5. MECHANICAL OR PLUMBING VENT FLASHING, BOOTS, SEE — 15 A-9.11, 8 A-9.8

ROOF PLAN LEGEND

+0'-0" — DIMENSION INDICATING TOP OF ROOF LEVEL. SEE DETAILS FOR TOP OF ROOF LOCATION WITHIN ASSEMBLY

MODIFIED BITUMEN ROOFING O/ WOOD DECK

KEY PLAN

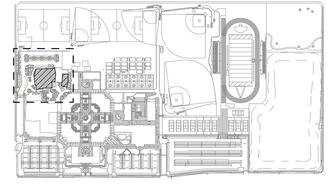

NORTH

QUATTROCCHI KWOK ARCHITECTS
Main Office:
636 Fifth Street, Santa Rosa, CA 95404
Pleasanton Office:
600 Main Street, Suite E,
Pleasanton, CA 94566
(707) 576-0829

LICENSED ARCHITECT
JIM THEISS
LICENSE # C22643
EXP JUNE 30, 2021
STATE OF CALIFORNIA

SIGNED: JUNE 28, 2019

FREEDOM HIGH SCHOOL

PERFORMING ARTS AND CTE FACILITIES

1050 NEROLY RD
OAKLEY, CA 94561

LIBERTY UNION HIGH SCHOOL DISTRICT

ARCH PROJECT NO: 1739.00
DRAWN BY:
DRAWING SCALE:
PTN: 61721-0068

BID SET

AUGUST 13, 2019

SHEET TITLE

BLDG B ROOF PLAN

SHEET NUMBER

A-B4.1

BIM Server: BIMCLOUD-QKA - BIMcloud/1739.00 - Freedom High School/1739.00 FREEDOM HS Construction Technology Building 8013;8/02/19;12:59 AM

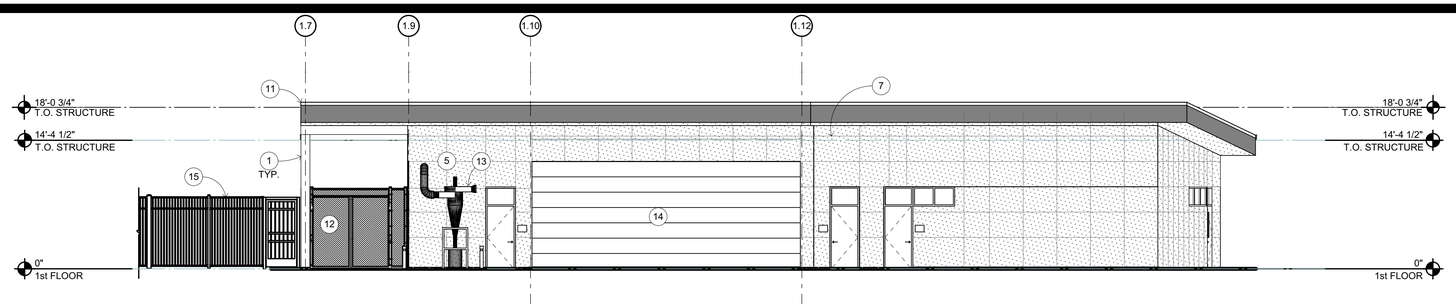

WEST ELEVATION 1

1/8" = 1'-0"

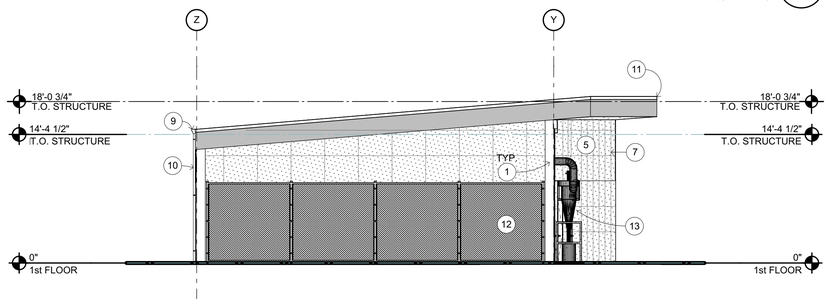

NORTH ELEVATION 2

1/8" = 1'-0"

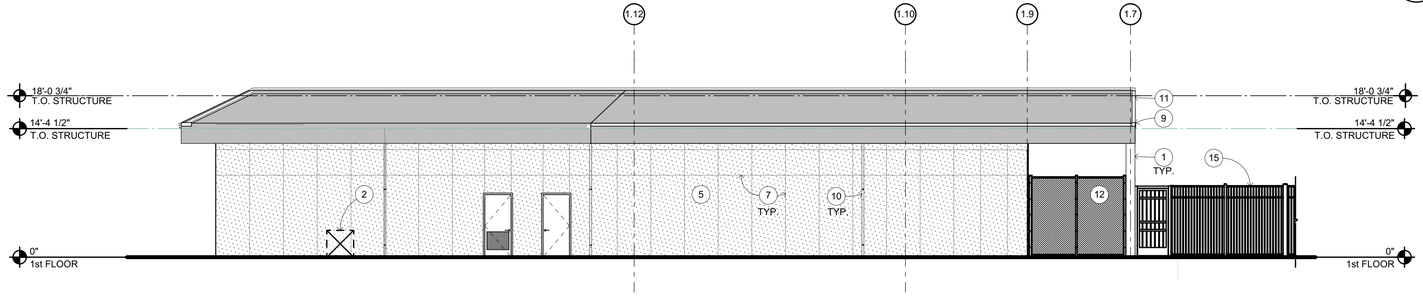

EAST ELEVATION 3

1/8" = 1'-0"

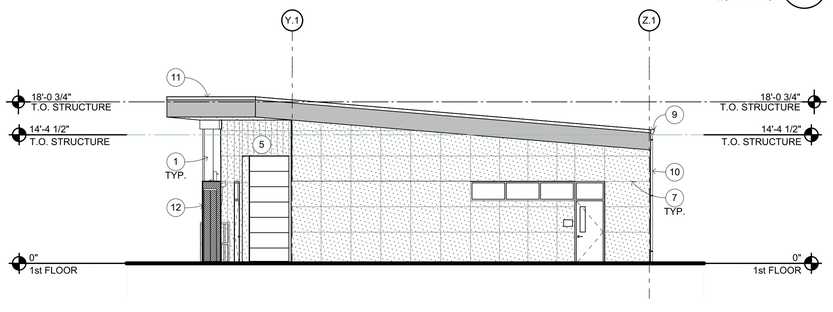

SOUTH ELEVATION 4

1/8" = 1'-0"

EXTERIOR ELEVATION KEYNOTES

NOT ALL KEYNOTES MAY APPLY TO THIS SHEET

1. STRUCTURAL ITEM, S.S.D.
2. MECHANICAL ITEM, S.M.D.
3. PLUMBING ITEM, S.P.D.
4. ELECTRICAL ITEM, S.E.D.
5. DARK COLORED CEMENT PLASTER
6. NOT USED
7. CEMENT PLASTER CONTROL JOINT
8. CEMENT PLASTER REVEALS
9. GUTTER
10. RAIN WATER LEADER
11. CAP FLASHING
12. CHAINLINK FENCE AND GATE
13. DUST EXTRACTOR
14. MOTORIZED SECTIONAL OVERHEAD DOOR
15. ORNAMENTAL GATE, SEE SITE PLAN

EXTERIOR ELEVATION GENERAL NOTES

1. NOTES AND SYMBOLS ARE TO APPLY AT ALL AREAS OF SIMILAR GRAPHIC REPRESENTATION. SUCH INDICATIONS MAY BE LIMITED TO PROMOTE CLARITY OR AVOID REDUNDANCY. NO LIMITATION OF APPLICATION SHALL BE CONSTRUED WITHOUT SPECIFIC NOTATION.
2. ALL PENETRATIONS THROUGH EXTERIOR ROOF AND WALLS, AND FLOORS SHALL BE FLASHED AND SEALED WEATHER TIGHT. ALL PENETRATIONS THROUGH THE BUILDING INSULATION ENVELOPE SHALL BE PACKED WITH INSULATION.
3. PROVIDE OPENING FLASHINGS AT ALL WINDOWS, DOORS, LOUVERS AND SIMILAR WALL OPENINGS PER
4. REFER TO MECHANICAL DRAWINGS FOR REGISTERS AND VENTS NOT OTHERWISE SHOWN.
5. REFER TO ELECTRICAL DRAWINGS FOR HORNS, SPEAKERS, PULL STATIONS AND OTHER FEATURES NOT OTHERWISE SHOWN.

LEGEND

- DARK COLORED CEMENT PLASTER
- CHAIN LINK FENCE

KEY PLAN

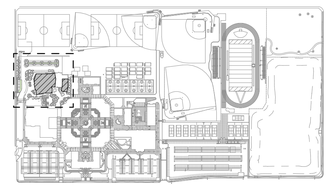

QUATTROCCHI KWOK ARCHITECTS
Main Office:
636 Fifth Street, Santa Rosa, CA 95404
Pleasanton Office:
600 Main Street, Suite E,
Pleasanton, CA 94566
(707) 576-0829

LICENSED ARCHITECT
JIM THEISS
LICENSE # C22643
EXP JUNE 30, 2021
STATE OF CALIFORNIA

SIGNED: JUNE 28, 2019

FREEDOM HIGH SCHOOL

PERFORMING ARTS AND CTE FACILITIES

1050 NEROLY RD
OAKLEY, CA 94561

LIBERTY UNION HIGH SCHOOL DISTRICT

ARCH PROJECT NO:	1739.00
DRAWN BY:	
DRAWING SCALE:	
PTN:	61721-0068

BID SET

AUGUST 13, 2019

SHEET TITLE

BLDG B EXTERIOR ELEVATIONS

SHEET NUMBER

A-B5.1

BIM Server: BIMCLOUD-QKA - BIMcloud/1739.00 - Freedom High School/1739.00 FREEDOM HS Construction Technology Building 60138/02/19 12:59 AM

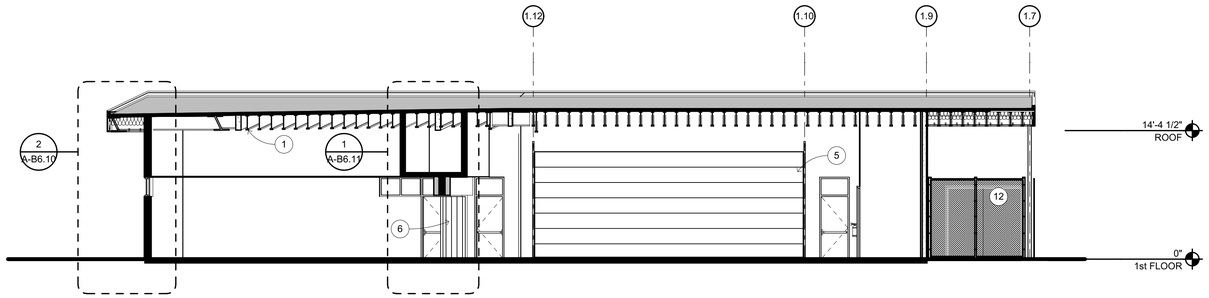

LONGITUDINAL SECTION THROUGH CTE BUILDING 1

1/8" = 1'-0"

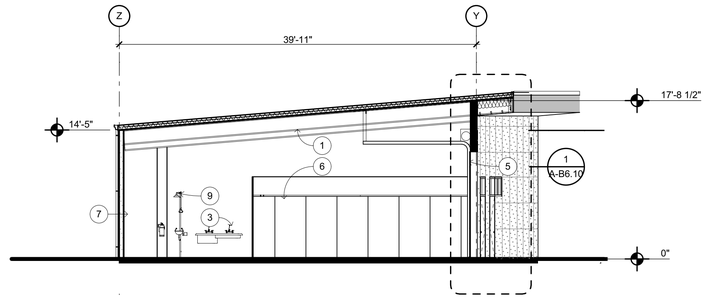

TRANSVERSE SECTION THROUGH BUILDING 2

1/8" = 1'-0"

SECTION KEYNOTES

NOT ALL KEYNOTES MAY APPLY TO THIS SHEET

1. STRUCTURAL ITEM, S.S.D.
2. MECHANICAL ITEM, S.M.D.
3. PLUMBING ITEM, S.P.D.
4. ELECTRICAL ITEM, S.E.D.
5. MOTORIZED SECTIONAL OVERHEAD DOOR ON TRACK
6. FOLDING PARTITION
7. CUBBIES
8. FIRE EXTINGUISHER
9. EMERGENCY EYE WASH
10. COMMERCIAL GRADE MOP SINK

SECTION GENERAL NOTES

1. NOTES AND SYMBOLS ARE TO APPLY AT ALL AREAS OF SIMILAR GRAPHIC REPRESENTATION. SUCH INDICATIONS MAY BE LIMITED TO PROMOTE CLARITY OR AVOID REDUNDANCY. NO LIMITATION OF APPLICATION SHALL BE CONSTRUED WITHOUT SPECIFIC NOTATION.
2. ALL PENETRATIONS THROUGH EXTERIOR ROOF AND WALLS, AND FLOORS SHALL BE FLASHED AND SEALED WEATHER TIGHT. ALL PENETRATIONS THROUGH THE BUILDING INSULATION ENVELOPE SHALL BE PACKED WITH INSULATION.
3. PROVIDE OPENING FLASHINGS AT ALL WINDOWS, DOORS, LOUVERS AND SIMILAR WALL OPENINGS PER DETAIL
4. PROVIDE FIRESTOPPING AT CONCEALED SPACES, INCLUDING BETWEEN STAIR STRINGERS & BETWEEN STUDS WITH STAIR RUN, FURRED SPACES, CEILING/FLOOR LEVELS AND 10'-0" INTERVALS ALONG LENGTHS OF WALL, SOFFITS, DROP CEILINGS, AND COVE CEILINGS PER CBC 708.
5. REFER TO INTERIOR ELEVATIONS FOR WALL FINISHES AND INFORMATION NOT SHOWN, TYPICAL.
6. REFER TO FLOOR PLAN FOR FLOOR FINISHES, TYPICAL.
7. REFER TO REFLECTED CEILING PLAN FOR CEILING FINISHES, TYPICAL,
8. REFER TO MECHANICAL DRAWINGS FOR REGISTERS AND VENTS NOT OTHERWISE SHOWN.
9. REFER TO ELECTRICAL DRAWINGS FOR HORNS, SPEAKERS, PULL STATIONS AND OTHER FEATURES NOT OTHERWISE SHOWN.

KEY PLAN

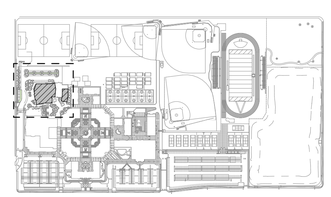

QUATTROCCHI KWOK ARCHITECTS
Main Office:
636 Fifth Street, Santa Rosa, CA 95404
Pleasanton Office:
600 Main Street, Suite E,
Pleasanton, CA 94566
(707) 576-0829

LICENSED ARCHITECT
JIM THEISS
LICENSE # C22643
EXP JUNE 30, 2021
STATE OF CALIFORNIA

SIGNED: JUNE 28, 2019

FREEDOM HIGH SCHOOL

PERFORMING ARTS AND CTE FACILITIES

1050 NEROLY RD
OAKLEY, CA 94561

LIBERTY UNION HIGH SCHOOL DISTRICT

ARCH PROJECT NO: 1739.00
DRAWN BY:
DRAWING SCALE:
PTN: 61721-0068

BID SET

AUGUST 13, 2019

SHEET TITLE

BLDG B BUILDING SECTIONS

SHEET NUMBER

A-B6.1

BIM Server: BIMCLOUD-QKA - BIMcloud/1739.00 - Freedom High School/1739.00 FREEDOM HS Construction Technology Building 60133/02/19/12:59 AM

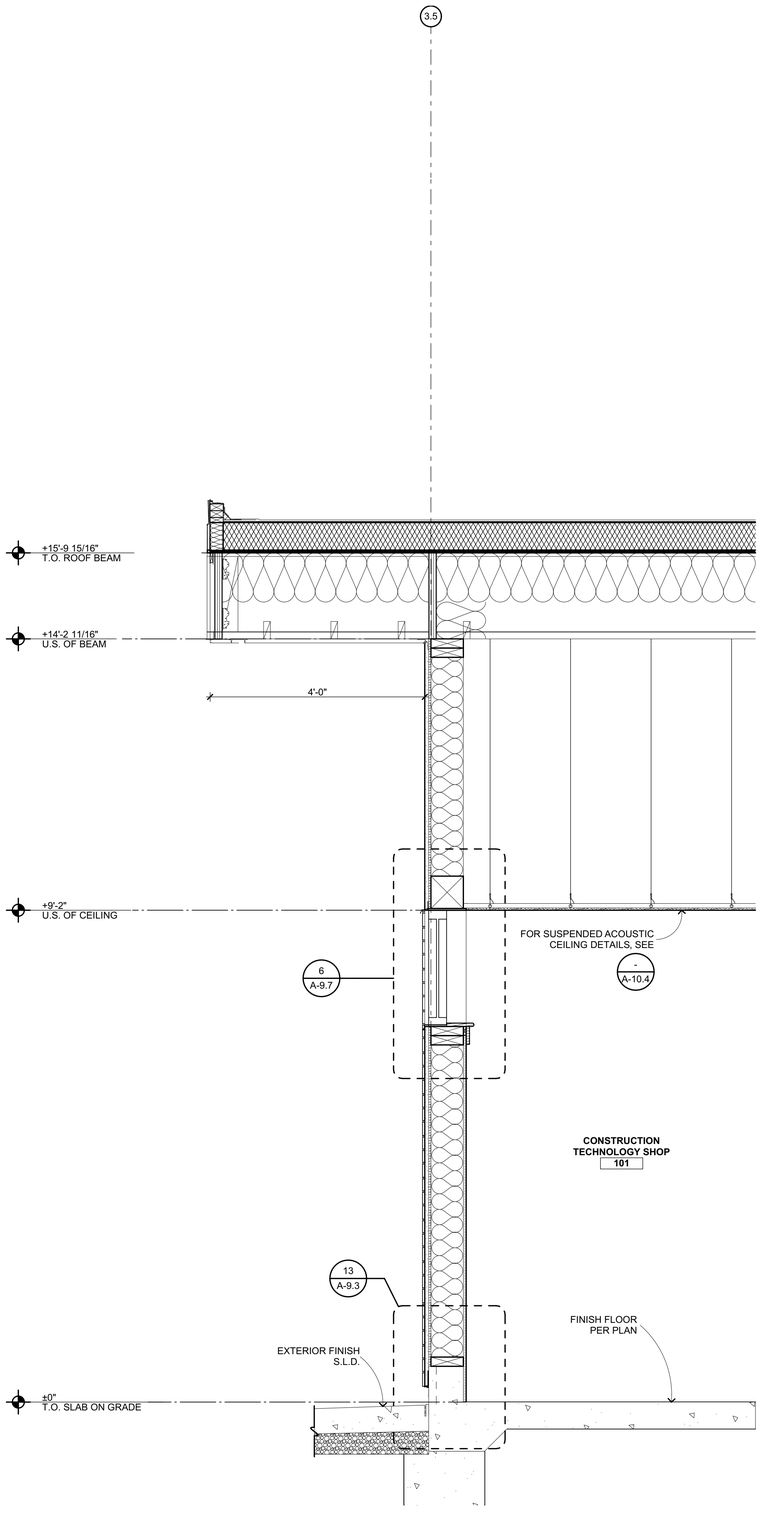

SOUTH EXT WALL THROUGH TRANSOM WINDOW SECTION

3/4" = 1'-0"

2

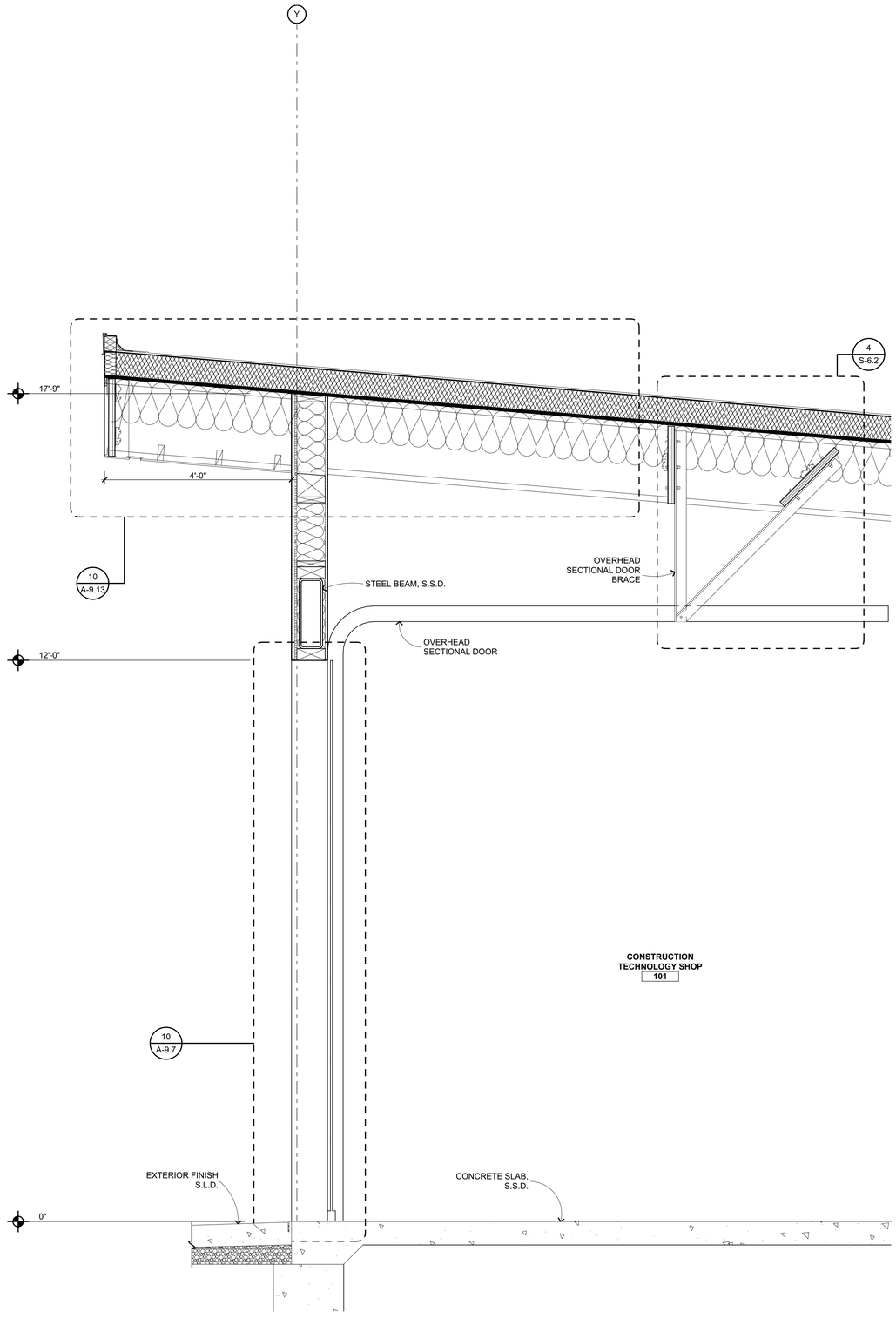

WEST EXT WALL THROUGH OVERHEAD DOOR SECTION (REVERSED)

3/4" = 1'-0"

1

QUATTROCCHI KWOK ARCHITECTS

Main Office:
636 Fifth Street, Santa Rosa, CA 95404
Pleasanton Office:
600 Main Street, Suite E,
Pleasanton, CA 94566
(707) 576-0829

LICENSED ARCHITECT
JIM THEISS
LICENSE # C22643
EXP JUNE 30, 2021
STATE OF CALIFORNIA

SIGNED: JUNE 28, 2019

FREEDOM HIGH SCHOOL

PERFORMING ARTS AND CTE FACILITIES

1050 NEROLY RD
OAKLEY, CA 94561

LIBERTY UNION HIGH SCHOOL DISTRICT

ARCH PROJECT NO:	1739.00
DRAWN BY:	
DRAWING SCALE:	
PTN:	61721-0068

BID SET

AUGUST 13, 2019

SHEET TITLE

WALL SECTIONS

SHEET NUMBER

A-B6.10

BIM Server: BIMCLOUD-QKA - BIMcloud/1739.00 - Freedom High School/1739.00 FREEDOM HS Construction Technology Building 6013;8/02/19;12:59 AM

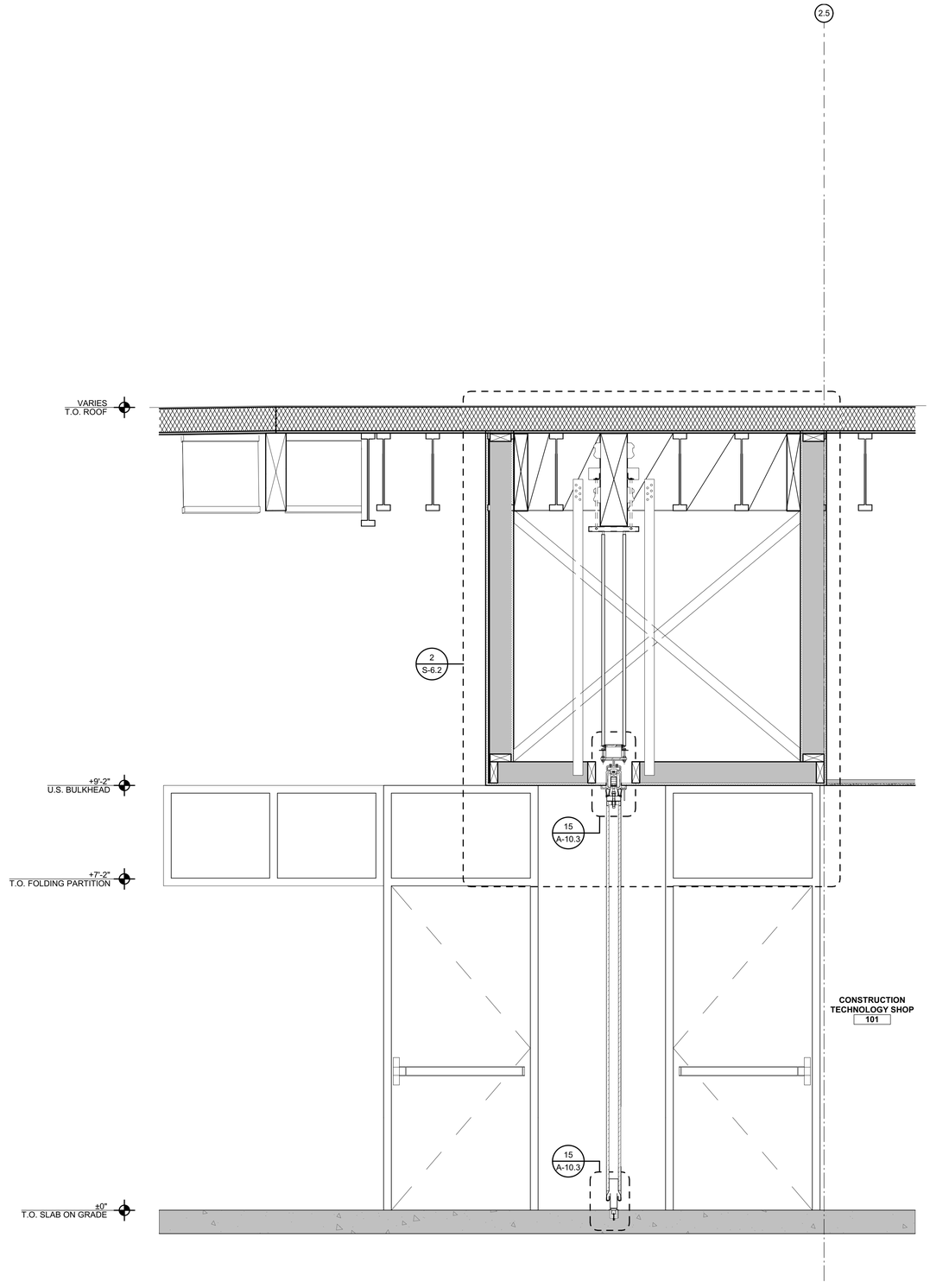

FOLDING PARTITION BULKHEAD 1

3/4" = 1'-0"

QUATTROCCHI KWOK
ARCHITECTS

Main Office:
636 Fifth Street, Santa Rosa, CA 95404
Pleasanton Office:
600 Main Street, Suite E,
Pleasanton, CA 94566
(707) 576-0829

LICENSED ARCHITECT
JIM THEISS
LICENSE # C22643
EXP JUNE 30, 2021
STATE OF CALIFORNIA

SIGNED: JUNE 28, 2019

FREEDOM HIGH SCHOOL

PERFORMING ARTS AND CTE FACILITIES

1050 NEROLY RD
OAKLEY, CA 94561

LIBERTY UNION HIGH SCHOOL DISTRICT

ARCH PROJECT NO:	1739.00
DRAWN BY:	
DRAWING SCALE:	
PTN:	61721-0068

BID SET

AUGUST 13, 2019

SHEET TITLE

WALL SECTIONS

SHEET NUMBER

A-B6.11

BIM Server: BIMCLOUD-QKA - BIMcloud/1739.00 - Freedom High School/1739.00 FREEDOM HS Construction Technology Building 6013/8/6/2019 3:10 PM

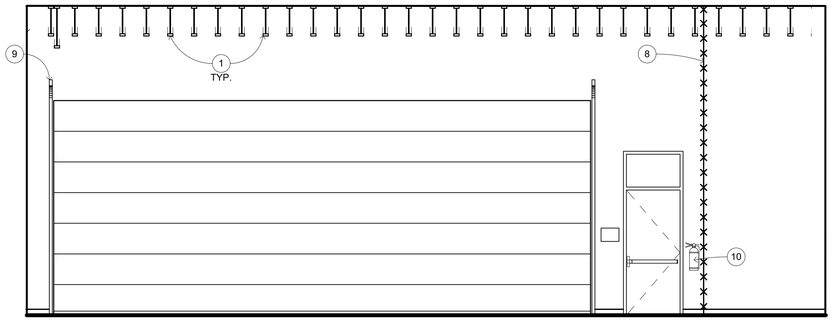

WEST

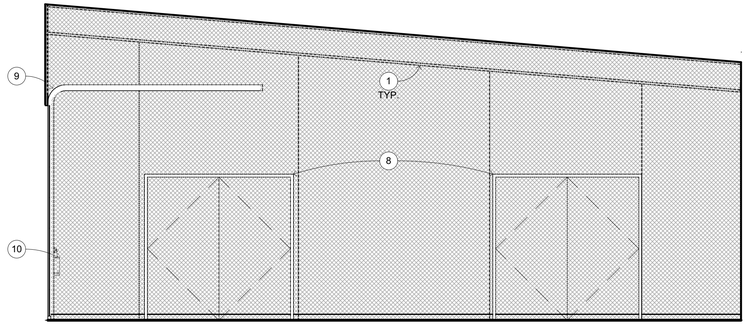

NORTH

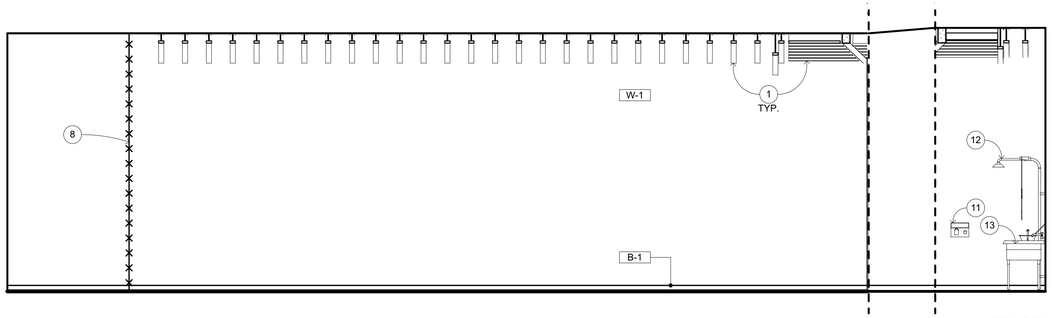

EAST

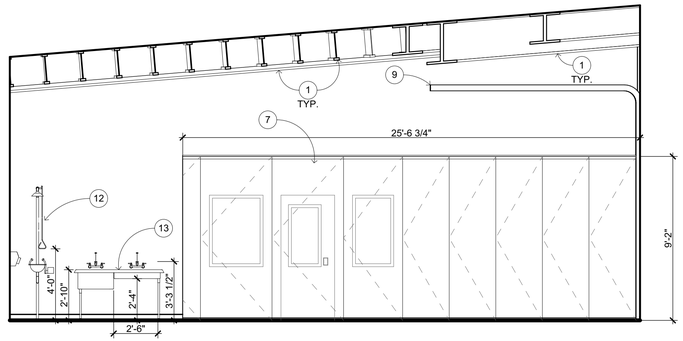

SOUTH

CONSTRUCTION TECHNOLOGY SHOP **B101**

1/4" = 1'-0" A-B2.1

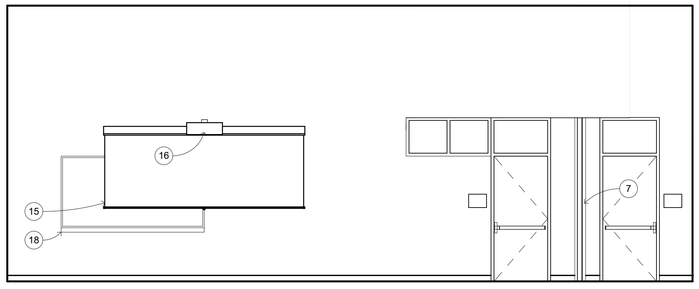

WEST

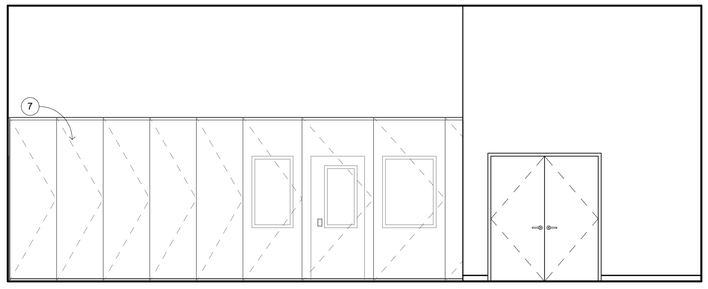

NORTH

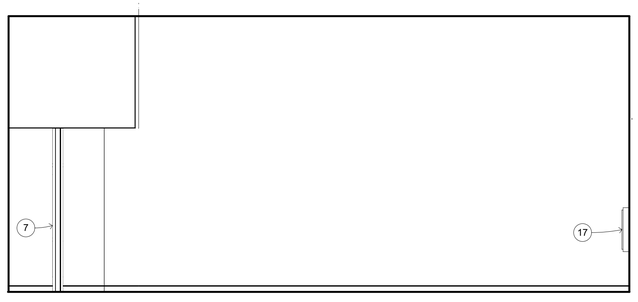

EAST

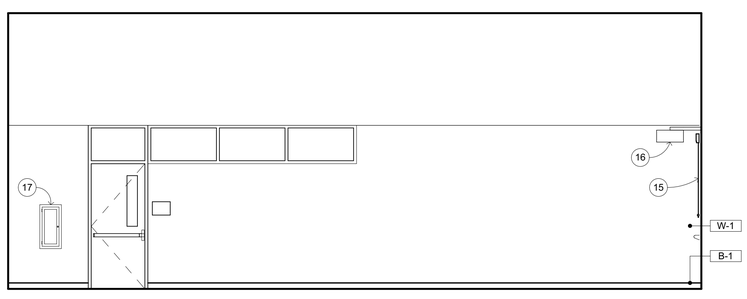

SOUTH

CONSTRUCTION TECHNOLOGY SHOP **101**

1/4" = 1'-0" A-B2.1

INTERIOR ELEVATION KEYNOTES

NOT ALL KEYNOTES MAY APPLY TO THIS SHEET

1. STRUCTURAL ITEM, S.S.D.
2. MECHANICAL ITEM, S.M.D.
3. PLUMBING ITEM, S.P.D.
4. ELECTRICAL ITEM, S.E.D.
5. BULK HEAD
6. NOT USED
7. FOLDING PARTITION FOR DUST ISOLATION (ALTERNATE) — 15 / A-10.3
8. CHAINLINK FENCE WITH GATE — 10 / A-9.6
9. MOTORIZED SECTIONAL OVERHEAD DOOR ON TRACK — 10 / A-9.7
10. WALL MOUNTED FIRE EXTINGUISHER — 8 / A-10.3
11. ELECTRIC HAND DRYER
12. EYE WASH STATION
13. COMMERCIAL GRADE MOP SINK
14. NOT USED
15. RETRACTABLE PROJECTION SCREEN
16. WALL MOUNTED SHORT THROW PROJECTOR, S.T.D. — 2 / AV-7.13 — 8 / A-10.3
17. SEMI-RECESSED FIRE EXTINGUISHER CABINET — 4 / A-10.3
18. WHITEBOARD

INTERIOR ELEVATION GENERAL NOTES

1. NOTES AND SYMBOLS ARE TO APPLY AT ALL AREAS OF SIMILAR GRAPHIC REPRESENTATION. SUCH INDICATIONS MAY BE LIMITED TO PROMOTE CLARITY OR AVOID REDUNDANCY. NO LIMITATION OF APPLICATION SHALL BE CONSTRUED WITHOUT SPECIFIC NOTATION.
2. REFER TO MECHANICAL DRAWINGS FOR REGISTERS AND VENTS NOT OTHERWISE SHOWN.
3. REFER TO ELECTRICAL DRAWINGS FOR HORNS, SPEAKERS, PULL STATIONS AND OTHER FEATURES NOT OTHERWISE SHOWN.
4. TYPICAL MOUNTING HEIGHTS OF ACCESSIBLE ELEMENTS AT ACCESSIBLE FIXTURES SEE — 4 / A-10.1
5. FLUSH VALVE HANDLES SHALL BE LOCATED AT THE WIDE SIDE OF ACCESSIBLE STALL.
6. FLOORING & BASE SHALL EXTEND UNDER ACCESSIBLE SINK/LAVATORY BASE CABINETS TO THE WALL. HOT WATER AND DRAINPIPES ACCESSIBLE UNDER LAVATORIES SHALL BE INSULATED OR OTHERWISE COVERED. THERE SHALL BE NO SHARP OR ABRASIVE SURFACES UNDER LAVATORIES.
7. PROVIDE SOLID BLOCKING FOR CABINET, ACCESSORY, OR EQUIPMENT MOUNTING

WALL AND BASE FINISH CODES

W-1	PAINTED GYP. BD. TYP.	B-1	4" COVED RUBBER BASE TYP.
W-2	PAINTED GYP. BD. TO MATCH STUCCO (DARK)		
W-3	PAINTED GYP. BD. TO MATCH STUCCO (LIGHT)		
W-4	TILE TYP.		
W-5	ACOUSTIC PANELS		
W-6	FIBER REINFORCED PANELS		

LEGEND

- STRUCTURAL ITEM, S.S.D.
- CHAIN LINK FENCE
- TYPICAL WALL CORNERLINE (SEE FLOOR PLAN)
- SCHEMATIC WALL (PLAN VIEW) - BEND AT WALL CORNERLINE REPRESENTED ALPHABETICALLY. INTERIOR ELEVATIONS SHOWS WALL IN FLATTENED STATE. NOTE, SCHEMATIC WALL DRAWN AT HALF SCALE U.N.O.

QUATTROCCHI KWOK ARCHITECTS

Main Office:
636 Fifth Street, Santa Rosa, CA 95404
Pleasanton Office:
600 Main Street, Suite E,
Pleasanton, CA 94566
(707) 576-0829

LICENSED ARCHITECT
JIM THEISS
LICENSE # C22643
EXP JUNE 30, 2021
STATE OF CALIFORNIA

SIGNED: JUNE 28, 2019

FREEDOM HIGH SCHOOL

PERFORMING ARTS AND CTE FACILITIES

1050 NEROLY RD
OAKLEY, CA 94561

LIBERTY UNION HIGH SCHOOL DISTRICT

ARCH PROJECT NO: 1739.00
DRAWN BY:
DRAWING SCALE:
PTN: 61721-0068

BID SET

AUGUST 13, 2019

SHEET TITLE

BLDG B INTERIOR ELEVATIONS

SHEET NUMBER

A-B7.1

BIM Server: BIMCLOUD-QKA - BIMcloud/1739.00 - Freedom High School/1739.00 FREEDOM HS Construction Technology Building 6013/8/6/2019 3:07 PM

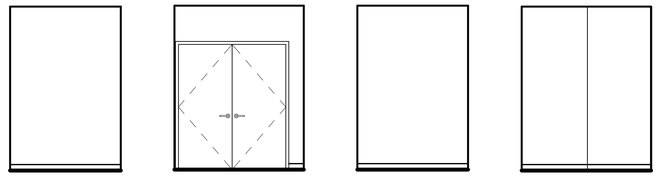

ELECT. RM **102**

1/4" = 1'-0" A-B2.1

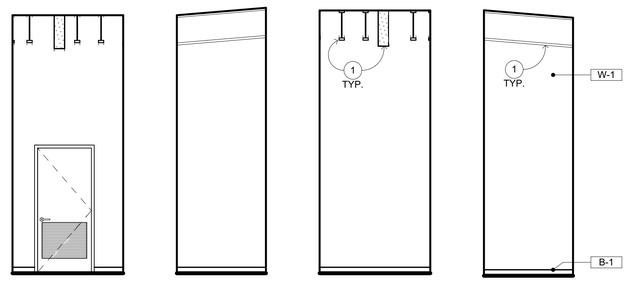

MECH. RM **103**

1/4" = 1'-0" A-B2.1

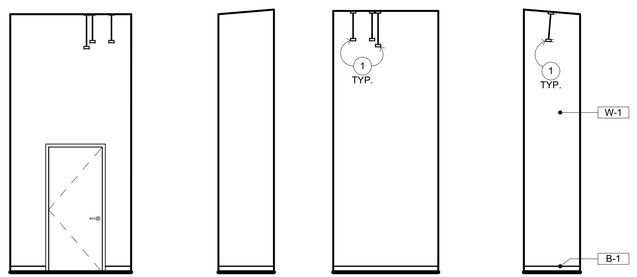

SPRINKLER RISER **104**

1/4" = 1'-0" A-B2.1

INTERIOR ELEVATION KEYNOTES

NOT ALL KEYNOTES MAY APPLY TO THIS SHEET

1. STRUCTURAL ITEM, S.S.D.
2. MECHANICAL ITEM, S.M.D.
3. PLUMBING ITEM, S.P.D.
4. ELECTRICAL ITEM, S.E.D.
5. BULK HEAD
6. NOT USED
7. FOLDING PARTITION FOR DUST ISOLATION (ALTERNATE) — 15 / A-10.3
8. CHAINLINK FENCE WITH GATE — 10 / A-9.6
9. MOTORIZED SECTIONAL OVERHEAD DOOR ON TRACK — 10 / A-9.7
10. WALL MOUNTED FIRE EXTINGUISHER — 8 / A-10.3
11. ELECTRIC HAND DRYER
12. EYE WASH STATION
13. COMMERCIAL GRADE MOP SINK
14. NOT USED
15. RETRACTABLE PROJECTION SCREEN
16. WALL MOUNTED SHORT THROW PROJECTOR, S.T.D. — 2 / AV-7.13 — 8 / A-10.3
17. SEMI-RECESSED FIRE EXTINGUISHER CABINET — 4 / A-10.3
18. WHITEBOARD

INTERIOR ELEVATION GENERAL NOTES

1. NOTES AND SYMBOLS ARE TO APPLY AT ALL AREAS OF SIMILAR GRAPHIC REPRESENTATION. SUCH INDICATIONS MAY BE LIMITED TO PROMOTE CLARITY OR AVOID REDUNDANCY. NO LIMITATION OF APPLICATION SHALL BE CONSTRUED WITHOUT SPECIFIC NOTATION.
2. REFER TO MECHANICAL DRAWINGS FOR REGISTERS AND VENTS NOT OTHERWISE SHOWN.
3. REFER TO ELECTRICAL DRAWINGS FOR HORNS, SPEAKERS, PULL STATIONS AND OTHER FEATURES NOT OTHERWISE SHOWN.
4. TYPICAL MOUNTING HEIGHTS OF ACCESSIBLE ELEMENTS AT ACCESSIBLE FIXTURES SEE — 4 / A-10.1
5. FLUSH VALVE HANDLES SHALL BE LOCATED AT THE WIDE SIDE OF ACCESSIBLE STALL.
6. FLOORING & BASE SHALL EXTEND UNDER ACCESSIBLE SINK/LAVATORY BASE CABINETS TO THE WALL. HOT WATER AND DRAINPIPES ACCESSIBLE UNDER LAVATORIES SHALL BE INSULATED OR OTHERWISE COVERED. THERE SHALL BE NO SHARP OR ABRASIVE SURFACES UNDER LAVATORIES.
7. PROVIDE SOLID BLOCKING FOR CABINET, ACCESSORY, OR EQUIPMENT MOUNTING

WALL AND BASE FINISH CODES

W-1	PAINTED GYP. BD. TYP.	B-1	4" COVED RUBBER BASE TYP.
W-2	PAINTED GYP. BD. TO MATCH STUCCO (DARK)		
W-3	PAINTED GYP. BD. TO MATCH STUCCO (LIGHT)		
W-4	TILE TYP.		
W-5	ACOUSTIC PANELS		
W-6	FIBER REINFORCED PANELS		

LEGEND

- STRUCTURAL ITEM, S.S.D.
- CHAIN LINK FENCE
- TYPICAL WALL CORNERLINE (SEE FLOOR PLAN)
- SCHEMATIC WALL (PLAN VIEW) - BEND AT WALL CORNERLINE REPRESENTED ALPHABETICALLY. INTERIOR ELEVATIONS SHOWS WALL IN FLATTENED STATE. NOTE, SCHEMATIC WALL DRAWN AT HALF SCALE U.N.O.

QUATTROCCHI KWOK ARCHITECTS
Main Office:
636 Fifth Street, Santa Rosa, CA 95404
Pleasanton Office:
600 Main Street, Suite E,
Pleasanton, CA 94566
(707) 576-0829

LICENSED ARCHITECT
JIM THEISS
LICENSE # C22643
EXP JUNE 30, 2021
STATE OF CALIFORNIA

SIGNED: JUNE 28, 2019

FREEDOM HIGH SCHOOL

PERFORMING ARTS AND CTE FACILITIES

1050 NEROLY RD
OAKLEY, CA 94561

LIBERTY UNION HIGH SCHOOL DISTRICT

ARCH PROJECT NO: 1739.00
DRAWN BY:
DRAWING SCALE:
PTN: 61721-0068

BID SET

AUGUST 13, 2019

SHEET TITLE

BLDG B INTERIOR ELEVATIONS

SHEET NUMBER

A-B7.2

BIM Server: BIMCLOUD-QKA - BIMcloud/1739.00 - Freedom High School/1739.00 FREEDOM HS Construction Technology Building 6013:8/6/2019 3:10 PM

DOOR PANEL TYPES

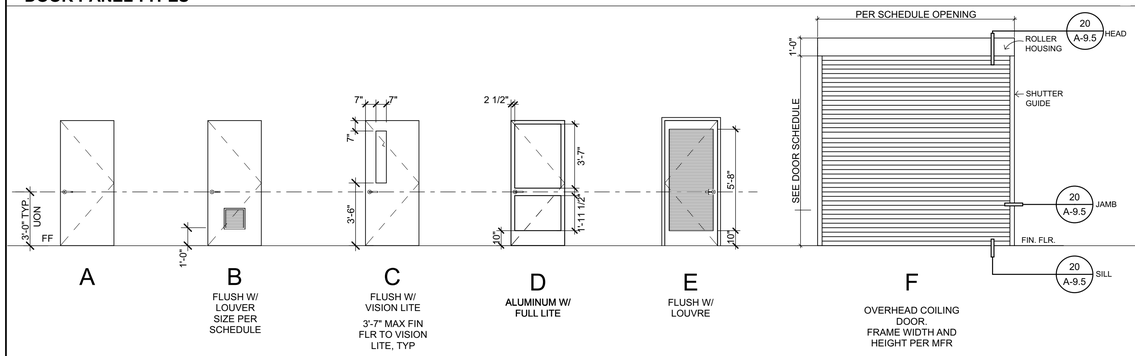

A — B — C — D — E — F

B FLUSH W/ LOUVER SIZE PER SCHEDULE

C FLUSH W/ VISION LITE
3'-7" MAX FIN FLR TO VISION LITE, TYP

D ALUMINUM W/ FULL LITE

E FLUSH W/ LOUVRE

F OVERHEAD COILING DOOR. FRAME WIDTH AND HEIGHT PER MFR

DOOR PANEL TYPES, CONT.

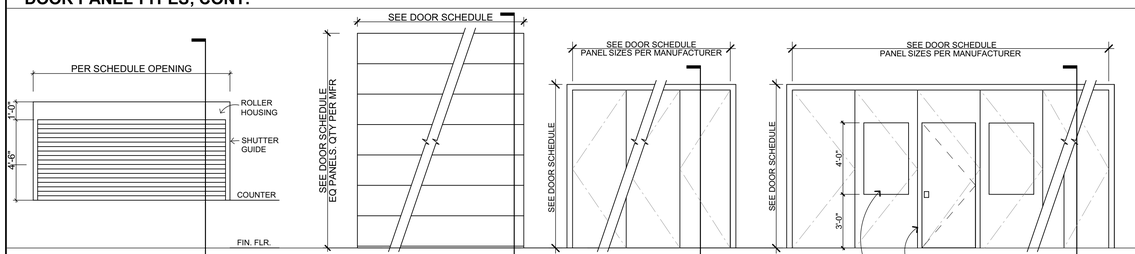

G OVERHEAD ROOLUP SHUTTERS, FRAME WIDTH AND HEIGHT PER MFR

H OVERHEAD SECTIONAL DOOR, FRAME WIDTH AND HEIGHT PER MFR

J MOTORIZED FOLDING PARTITION AT BUILDING A (FRAME WIDTH AND HEIGHT PER MFR)

K MOTORIZED FOLDING PARTITION AT BUILDING B (FRAME WIDTH AND HEIGHT PER MFR)

DOOR FRAME TYPES (SEE A-8.2 FOR ADDITIONAL TYPES)

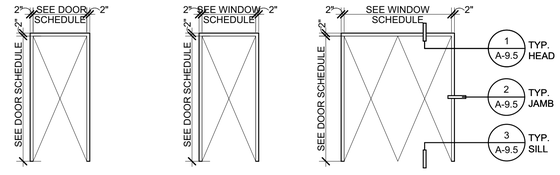

	1	2	3
TYPE	HOLLOW METAL FRAME	ALUMINUM FRAME	HOLLOW METAL FRAME
GLAZING	-	-	-
OPERATION	-	-	-
RATING	-	45 MIN	-
NOTES	-	-	-

GATE TYPES

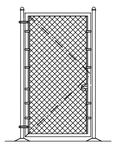

	G1
TYPE	CHAINLINK
GLAZING	-
OPERATION	-
RATING	-
NOTES	-

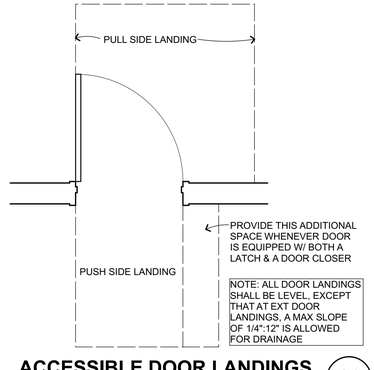

ACCESSIBLE DOOR LANDINGS

1/2" = 1'-0" (E.M.) B203301 — 16

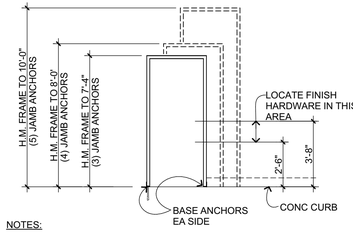

NOTES:

1. PROVIDE DOOR FRAME ANCHORAGE AS FOLLOWS: PROVIDE A MINIMUM OF 3-FRAME ANCHORS AT EA JAMB OF DOOR FRAMES. AT CONCRETE SLABS PROVIDE SNAP-IN FRAME ANCHORS AT 24" O.C. (2 MIN) WITH 3/8" DIA I.C.C.- APPROVED EXPANSION BOLTS FROM ANCHOR TO CONCRETE (TYP) JAMB ANCHORS TO BE SPACED EQUALLY.
2. ATTACH ANCHORS TO WOOD FRAMING WITH #8 F.H.W.S., 1 1/2" MINIMUM PENETRATION.
3. BASE ANCHORS ARE ADDITIONAL TO THE NUMBER OF JAMB ANCHORS INDICATED ON THIS DIAGRAM.

HM FRAME ANCHORAGE

1/4" = 1'-0" (E.M.) B203106 — 12

DOOR SCHEDULE BUILDING A

ID	TYPE	DOOR SIZE	DOOR MAT	DOOR FIN	FRAME TYPE	FRAME MAT	FRAME FIN	LOUVER SIZE	LABEL	HDWR	P. H.	REMARKS
A101A	D	PR - 3'-0" x 7'-0"	ALUM	FAC FIN	CW1	ALUM	FAC FIN		-	1	PH	FULL PERIMETER WEATHER STRIPPING
A101B	D	PR - 3'-0" x 7'-0"	ALUM	FAC FIN	CW1	ALUM	FAC FIN		-	1	PH	FULL PERIMETER WEATHER STRIPPING
A101C	D	PR - 3'-0" x 7'-0"	ALUM	FAC FIN	CW1	ALUM	FAC FIN		-	1	PH	FULL PERIMETER WEATHER STRIPPING
A103A	A	3'-0" x 7'-0"	WD	PAINT	1	MTL	PAINT		-	24		PEMKO 319 GASKETING AT HEAD AND JAMBS. MINIMIZE MEETING STILE GAPS AT PAIRS
A104A	A	3'-0" x 7'-0"	WD	PAINT	1	MTL	PAINT		-	25		PEMKO S88 GASKETING AT HEAD AND JAMBS
A105A	A	3'-0" x 7'-0"	WD	PAINT	1	MTL	PAINT		-	24		PEMKO 319 GASKETING AT HEAD AND JAMBS. MINIMIZE MEETING STILE GAPS AT PAIRS
A106A	A	3'-0" x 7'-0"	WD	PAINT	1	MTL	PAINT		-	25		PEMKO S88 GASKETING AT HEAD AND JAMBS
A107A	C	3'-0" x 7'-0"	WD	PAINT	1	MTL	PAINT		45-MIN	22	PH	SOUND CONTROL DOOR WITH MINIMUM STC RATING OF 50
A107B	A	PR - 3'-0" x 7'-0"	WD	PAINT	3	MTL	PAINT		-	23		SOUND CONTROL DOOR WITH MINIMUM STC RATING OF 50
A107C	A	3'-0" x 7'-0"	MTL	PAINT	1	MTL	PAINT...		-	3	PH	FULL PERIMETER WEATHER STRIPPING
A108A	C	3'-0" x 7'-0"	WD	PAINT	HM5	MTL	PAINT		-	26	PH	PEMKO 319 GASKETING AT HEAD AND JAMBS. MINIMIZE MEETING STILE GAPS AT PAIRS
A108B	A	3'-0" x 7'-0"	MTL	PAINT	HM1	MTL	PAINT		-	3	PH	FULL PERIMETER WEATHER STRIPPING
A109A	D	PR - 3'-0" x 7'-0"	ALUM	FAC FIN	CW2	ALUM	FAC FIN		45-MIN	30	PH	
A109B	D	PR - 3'-0" x 7'-0"	ALUM	FAC FIN	CW3	ALUM	FAC FIN		-	4	PH	FULL PERIMETER WEATHER STRIPPING
A110A	A	3'-0" x 7'-0"	MTL	PAINT	1	MTL	PAINT		-	2	PH	FULL PERIMETER WEATHER STRIPPING
A111A	A	3'-0" x 7'-0"	MTL	PAINT	1	MTL	PAINT		45-MIN	18		PEMKO 319 GASKETING AT HEAD AND JAMBS. MINIMIZE MEETING STILE GAPS AT PAIRS
A112A	A	3'-0" x 7'-0"	MTL	PAINT	1	MTL	PAINT		45-MIN	18		PEMKO 319 GASKETING AT HEAD AND JAMBS. MINIMIZE MEETING STILE GAPS AT PAIRS
A114A	J	19'-0" x 7'-0"	MTL	FAC FIN	1	MTL	FAC FIN	‹ IN				4KO 319 GASKETING AT HEAD AND JAMBS. MINIMIZE MEETING STILE GAPS AT PAIRS
A114BA	G-1	3'-0" x 7'-0"	CH-L	FAC FIN	NONE	NONE	PAINT		-			
A114BB	G-1	3'-0" x 7'-0"	CH-L	NONE	NONE	NONE	NONE		-			
A114C	A	3'-0" x 7'-0"	MTL	PAINT	1	MTL	PAINT		-	3	PH	FULL PERIMETER WEATHER STRIPPING
A114D	F	8'-0" x 12'-0"	MTL	PAINT		MTL	PAINT		45 MIN			INSULATED SLAT OVERHEAD COILING DOOR WITH MINIMUM STC OF 27
A114E	F	8'-0" x 12'-0"	MTL	PAINT		MTL	PAINT					INSULATED SLAT OVERHEAD COILING DOOR WITH MINIMUM STC OF 27
A115A	A	PR - 3'-0" x 7'-0"	MTL	PAINT	3	MTL	PAINT		45-MIN	16	PH	PEMKO 319 GASKETING AT HEAD AND JAMBS. MINIMIZE MEETING STILE GAPS AT PAIRS
A115B	A	PR - 3'-0" x 7'-0"	MTL	PAINT	3	MTL	PAINT		45-MIN	16	PH	PEMKO 319 GASKETING AT HEAD AND JAMBS. MINIMIZE MEETING STILE GAPS AT PAIRS
A116A	A	3'-0" x 7'-0"	MTL	PAINT	1	MTL	PAINT		45-MIN	10	PH	PEMKO 319 GASKETING AT HEAD AND JAMBS. MINIMIZE MEETING STILE GAPS AT PAIRS
A116B	A	3'-0" x 7'-0"	MTL	PAINT	1	MTL	PAINT		45-MIN	8	PH	PEMKO 319 GASKETING AT HEAD AND JAMBS. MINIMIZE MEETING STILE GAPS AT PAIRS
A119A	A	3'-0" x 7'-0"	WD	PAINT	1	MTL	PAINT		45-MIN	9	PH	PEMKO S88 GASKETING AT HEAD AND JAMBS
A119B	A	3'-0" x 7'-0"	WD	PAINT	1	MTL	PAINT		45-MIN	9	PH	PEMKO S88 GASKETING AT HEAD AND JAMBS
A120A	A	PR - 3'-0" x 7'-0"	WD	PAINT	3	MTL	PAINT		45-MIN	16	PH	PEMKO 319 GASKETING AT HEAD AND JAMBS. MINIMIZE MEETING STILE GAPS AT PAIRS
A120B	A	PR - 3'-0" x 7'-0"	WD	PAINT	3	MTL	PAINT		45-MIN	16	PH	PEMKO 319 GASKETING AT HEAD AND JAMBS. MINIMIZE MEETING STILE GAPS AT PAIRS
A121A	A	3'-0" x 7'-0"	WD	PAINT	1	MTL	PAINT		45-MIN	8	PH	PEMKO 319 GASKETING AT HEAD AND JAMBS. MINIMIZE MEETING STILE GAPS AT PAIRS
A121B	A	3'-0" x 7'-0"	MTL	PAINT	1	MTL	PAINT		-	2	PH	FULL PERIMETER WEATHER STRIPPING
A121C	A	3'-0" x 7'-0"	MTL	PAINT	1	MTL	PAINT		-	7		PEMKO 350 GASKETING AT HEAD AND JAMBS AND PEMKO 4301 AT DOOR BOTTOM
A122A	A	3'-0" x 7'-0"	WD	PAINT	1	MTL	PAINT		45-MIN	27		PEMKO 319 GASKETING AT HEAD AND JAMBS. MINIMIZE MEETING STILE GAPS AT PAIRS
A122B	G	7'-10" x 4'-4"	MTL	FAC FIN		MTL	PAINT					INSULATED SLAT OVERHEAD COILING DOOR WITH MINIMUM STC OF 27
A123A	A	3'-0" x 7'-0"	H.M.	PAINT	1	H.M.	PAINT		45-MIN	9		
A124A	A	3'-0" x 7'-0"	WD	PAINT	1	MTL	PAINT		45-MIN	10	PH	PEMKO 319 GASKETING AT HEAD AND JAMBS. MINIMIZE MEETING STILE GAPS AT PAIRS
A125A	C	3'-0" x 7'-0"	MTL	PAINT	1	MTL	PAINT		-	28		PEMKO 350 GASKETING AT HEAD AND JAMBS AND PEMKO 4301 AT DOOR BOTTOM
A126A	C	3'-0" x 7'-0"	MTL	PAINT	1	MTL	PAINT		-	28		PEMKO 350 GASKETING AT HEAD AND JAMBS AND PEMKO 4301 AT DOOR BOTTOM
A127A	C	3'-0" x 7'-0"	MTL	PAINT	HM5	MTL	PAINT		-	28		PEMKO 350 GASKETING AT HEAD AND JAMBS AND PEMKO 4301 AT DOOR BOTTOM
A127B	C	3'-0" x 7'-0"	MTL	PAINT	HM5	MTL	PAINT		-	28		PEMKO 350 GASKETING AT HEAD AND JAMBS AND PEMKO 4301 AT DOOR BOTTOM
A128A	A	3'-0" x 7'-0"	MTL	PAINT	1	MTL	PAINT		-	21		
A129A	A	3'-0" x 7'-0"	WD	PAINT	1	MTL	PAINT		-	21		
A130A	A	3'-0" x 7'-0"	WD	PAINT	1	MTL	PAINT		-	20		
A131A	A	3'-0" x 7'-0"	MTL	PAINT	1	MTL	PAINT		45-MIN	17		
A132A	A	PR - 3'-0" x 7'-0"	MTL	PAINT	3	MTL	PAINT		-	29		
A133A	A	3'-0" x 7'-0"	MTL	PAINT	1	MTL	PAINT		-	19		PEMKO S88 GASKETING AT HEAD AND JAMBS
A134A	A	3'-0" x 7'-0"	MTL	PAINT	1	MTL	PAINT		-	19		PEMKO S88 GASKETING AT HEAD AND JAMBS
A135A	A	3'-0" x 7'-0"	MTL	PAINT	1	MTL	PAINT		-	19		PEMKO S88 GASKETING AT HEAD AND JAMBS
A136A	A	3'-0" x 7'-0"	MTL	PAINT	1	MTL	PAINT		-	19		PEMKO S88 GASKETING AT HEAD AND JAMBS
A137A	A	3'-0" x 7'-0"	MTL	PAINT	1	MTL	PAINT		45-MIN	12		PEMKO 319 GASKETING AT HEAD AND JAMBS. MINIMIZE MEETING STILE GAPS AT PAIRS
A138A	A	3'-0" x 7'-0"	MTL	PAINT	1	MTL	PAINT		45-MIN	9		
A139A	F	8'-5" x 12'-0"	MTL	PAINT		MTL	PAINT		45-MIN			INSULATED SLAT OVERHEAD COILING DOOR WITH MINIMUM STC OF 27
A140A	A	PR - 3'-0" x 7'-0"	MTL	PAINT	3	MTL	PAINT		45-MIN	13		
A140B	F	9'-0" x 12'-0"	MTL	PAINT		MTL	PAINT		45-MIN			INSULATED SLAT OVERHEAD COILING DOOR WITH MINIMUM STC OF 27
A142A	A	PR - 3'-0" x 7'-0"	MTL	PAINT	3	MTL	PAINT		45-MIN	14		
A143A	A	3'-0" x 7'-0"	MTL	PAINT	1	MTL	PAINT		45-MIN	15	PH	PEMKO 319 GASKETING AT HEAD AND JAMBS. MINIMIZE MEETING STILE GAPS AT PAIRS
A144A	A	3'-0" x 7'-0"	MTL	PAINT	1	MTL	PAINT		-	5		FULL PERIMETER WEATHER STRIPPING
A146A	A	3'-0" x 7'-0"	MTL	PAINT	1	MTL	PAINT		-	6		
A201A	C	3'-0" x 7'-0"	MTL	PAINT	1	MTL	PAINT		-	31		PEMKO 319 GASKETING AT HEAD AND JAMBS. MINIMIZE MEETING STILE GAPS AT PAIRS
A201B	C	3'-0" x 7'-0"	H.M.	PAINT	1	H.M.	PAINT		-	31		PEMKO 319 GASKETING AT HEAD AND JAMBS. MINIMIZE MEETING STILE GAPS AT PAIRS
A203A	A	3'-0" x 7'-0"	H.M.	PAINT	1	MTL	PAINT		-	32		PEMKO 350 GASKETING AT HEAD AND JAMBS AND PEMKO 4301 AT DOOR BOTTOM
A302A	A	3'-0" x 7'-0"	MTL	PAINT	1	MTL	PAINT		-	35		PEMKO S88 GASKETING AT HEAD AND JAMBS
A302B	A	3'-0" x 7'-0"	MTL	PAINT	1	MTL	PAINT		-	35		PEMKO S88 GASKETING AT HEAD AND JAMBS
A303A	A	3'-0" x 7'-0"	MTL	PAINT	1	MTL	PAINT		-	32		PEMKO 350 GASKETING AT HEAD AND JAMBS AND PEMKO 4301 AT DOOR BOTTOM
A304A	A	3'-0" x 7'-0"	MTL	PAINT	1	MTL	PAINT		-	31		PEMKO 319 GASKETING AT HEAD AND JAMBS. MINIMIZE MEETING STILE GAPS AT PAIRS
A304A	A	3'-0" x 7'-0"	MTL	PAINT	1	MTL	PAINT		-	31		PEMKO 319 GASKETING AT HEAD AND JAMBS. MINIMIZE MEETING STILE GAPS AT PAIRS
A305A	A	3'-0" x 7'-0"	MTL	PAINT	1	MTL	PAINT		-	31		PEMKO 319 GASKETING AT HEAD AND JAMBS. MINIMIZE MEETING STILE GAPS AT PAIRS
A305B	A	3'-0" x 7'-0"	MTL	PAINT	1	MTL	PAINT		-	36		FULL PERIMETER WEATHER STRIPPING
A306A	A	3'-0" x 7'-0"	MTL	PAINT	1	MTL	PAINT		-	32		PEMKO 350 GASKETING AT HEAD AND JAMBS AND PEMKO 4301 AT DOOR BOTTOM
A307A	A	2'-8" x 7'-0"	MTL	PAINT	1	MTL	PAINT		-	32		PEMKO 350 GASKETING AT HEAD AND JAMBS AND PEMKO 4301 AT DOOR BOTTOM
B101A	A	3'-0" x 7'-0"	MTL	PAINT	HM1	MTL	PAINT		-	33	PH	

DOOR SCHEDULE B

ID	TYPE	DOOR SIZE	DOOR MAT	DOOR FIN	FRAME TYPE	FRAME MAT	FRAME FIN	LOUVER SIZE	LABEL	HDWR	P. H.	REMARKS
B101A	A	3'-0" x 7'-0"	MTL	PAINT	HM1	MTL	PAINT		-	33	PH	
B101B	H	30'-0" x 12'-0"	MTL	PAINT		MTL	PAINT					
B101C	A	3'-0" x 7'-0"	MTL	PAINT	HM1	MTL	PAINT		-	33	PH	
B101D	A	3'-0" x 7'-0"	MTL	PAINT	HM2	MTL	PAINT		-	33	PH	
B101E	C	3'-0" x 7'-0"	MTL	PAINT	HM3	MTL	PAINT		-	6	PH	
B101F	K	29'-1" x 9'-2"	MTL	FAC FIN	---	MTL	FAC FIN	---	---	34	---	MOTORIZED FOLDING PARTITION
B101G	G1	8'-0" x 8'-0"	MTL	FAC FIN	---	MTL	FAC FIN	---	---	---	---	---
B101H	G1	8'-0" x 8'-0"	MTL	FAC FIN	---	MTL	FAC FIN					---
B102A	A	PR - 3'-0" x 7'-0"			2				-			
B103A	E	3'-0" x 7'-0"			1			FULL	-	6		
B104A	A	3'-0" x 7'-0"			1				-	6		

QUATTROCCHI KWOK ARCHITECTS
Main Office:
636 Fifth Street, Santa Rosa, CA 95404
Pleasanton Office:
600 Main Street, Suite E,
Pleasanton, CA 94566
(707) 576-0829

LICENSED ARCHITECT — JIM THEISS — LICENSE # C22643 — EXP JUNE 30, 2021 — STATE OF CALIFORNIA

SIGNED: AUGUST 13, 2019

FREEDOM HIGH SCHOOL

PERFORMING ARTS AND CTE FACILITIES

1050 NEROLY RD,
OAKLEY, CA 94561

LIBERTY UNION HIGH SCHOOL DISTRICT

ARCH PROJECT NO: 1739.00
DRAWN BY:
DRAWING SCALE: AS NOTED
PTN: 61721-0068

BID SET

AUGUST 13, 2019

SHEET TITLE

DOOR SCHEDULE

SHEET NUMBER

A-8.1

BIM Server: BIMCLOUD-QKA - BIMcloud/1739.00 - Freedom High School/1739.00 FREEDOM HS Performing Arts Center;8/6/2019;4:11 PM

WINDOW TYPES

TYPICAL CURTAINWALL DETAILS — 8C/A-9.5 @ HEAD; 8E/A-9.5 @ JAMB; 8F/A-9.5 @ SILL

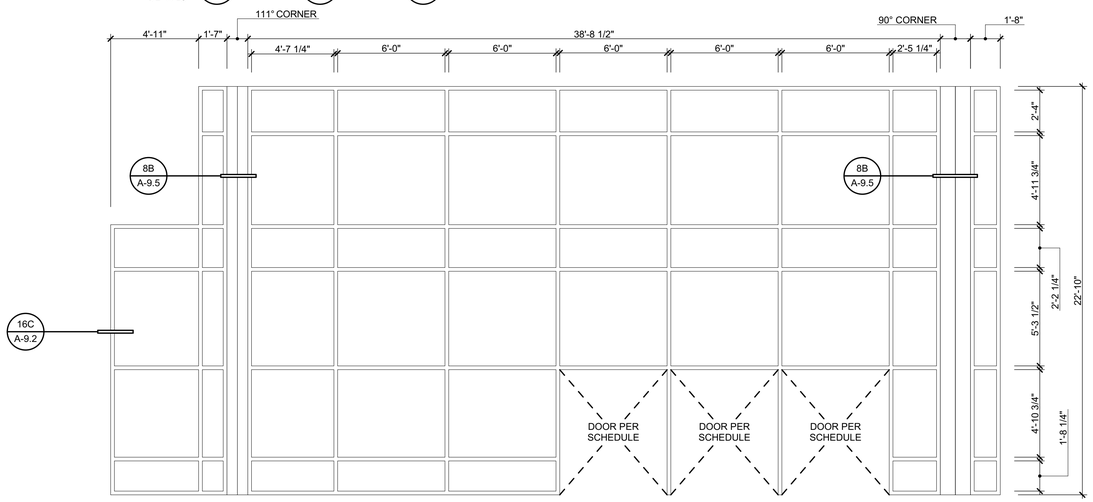

TYPICAL HOLLOW METAL DETAILS — 1/A-9.5 @ HEAD; 2/A-9.5 @ JAMB; 3/A-9.5 @ SILL

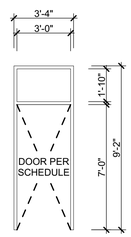

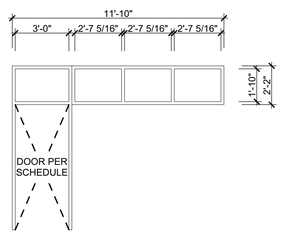

	CW1	HM1	HM2
TYPE	ALUMINUM CURTAINWALL SYSTEM	HOLLOW METAL FRAME	HOLLOW METAL FRAME
GLAZING	DOUBLE GLAZING	DOUBLE GLAZING	DOUBLE GLAZING
OPERATION	N/A	N/A	N/A
RATING	N/A	N/A	N/A
NOTES	N/A	N/A	N/A

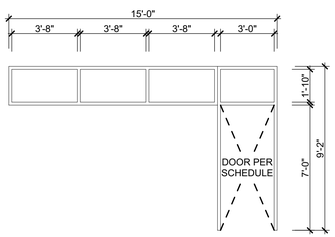

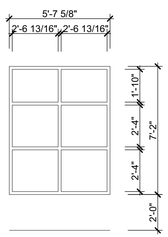

GLAZING GENERAL NOTES 1

1/4" = 1'-0"

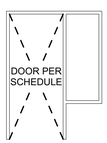

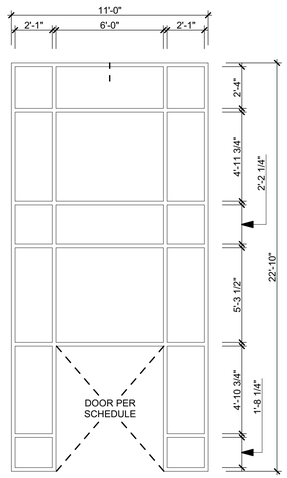

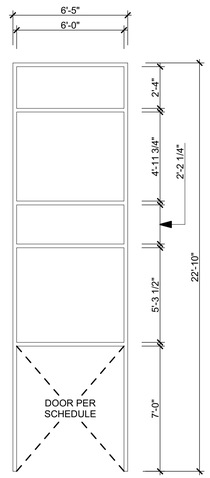

	HM3	HM4	HM5	CW2	CW3
TYPE	HOLLOW METAL FRAME	HOLLOW METAL FRAME	HOLLOW METAL FRAME	ALUMINUM CURTAINWALL SYSTEM	ALUMINUM CURTIANWALL SYSTEM
GLAZING	DOUBLE GLAZING	DOUBLE GLAZING	DOUBLE GLAZING	DOUBLE GLAZING	DOUBLE GLAZING
OPERATION	N/A	N/A	N/A	N/A	N/A
RATING	N/A	N/A	N/A	N/A	N/A
NOTES	N/A	N/A	N/A	N/A	N/A

QUATTROCCHI KWOK ARCHITECTS

Main Office:
636 Fifth Street, Santa Rosa, CA 95404
Pleasanton Office:
600 Main Street, Suite E,
Pleasanton, CA 94566
(707) 576-0829

LICENSED ARCHITECT
JIM THEISS
LICENSE # C22643
EXP JUNE 30, 2021
STATE OF CALIFORNIA

SIGNED: AUGUST 13, 2019

FREEDOM HIGH SCHOOL

PERFORMING ARTS AND CTE FACILITIES

1050 NEROLY RD,
OAKLEY, CA 94561

LIBERTY UNION HIGH SCHOOL DISTRICT

ARCH PROJECT NO: 1739.00
DRAWN BY:
DRAWING SCALE:
PTN: 61721-0068

BID SET

AUGUST 13, 2019

SHEET TITLE

WINDOW SCHEDULE

SHEET NUMBER

A-8.2

BIM Server: BIMCLOUD-QKA - BIMcloud/1739.00 - Freedom High School/1739.00 FREEDOM HS Performing Arts Center:8/6/2019,4:12 PM

WINDOW TYPES

TYPICAL STOREFRONT DETAILS — 16A / A-9.5 @ HEAD — 16B / A-9.5 @ JAMB — 16C / A-9.5 @ SILL

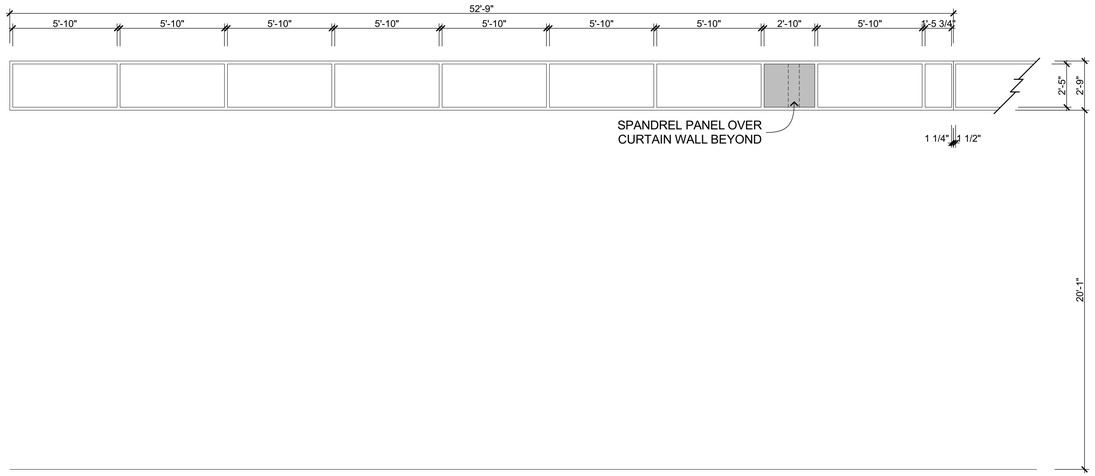

	SF1
TYPE	ALUMINUM STOREFRONT SYSTEM
GLAZING	DOUBLE GLAZING
OPERATION	N/A
RATING	N/A
NOTES	N/A

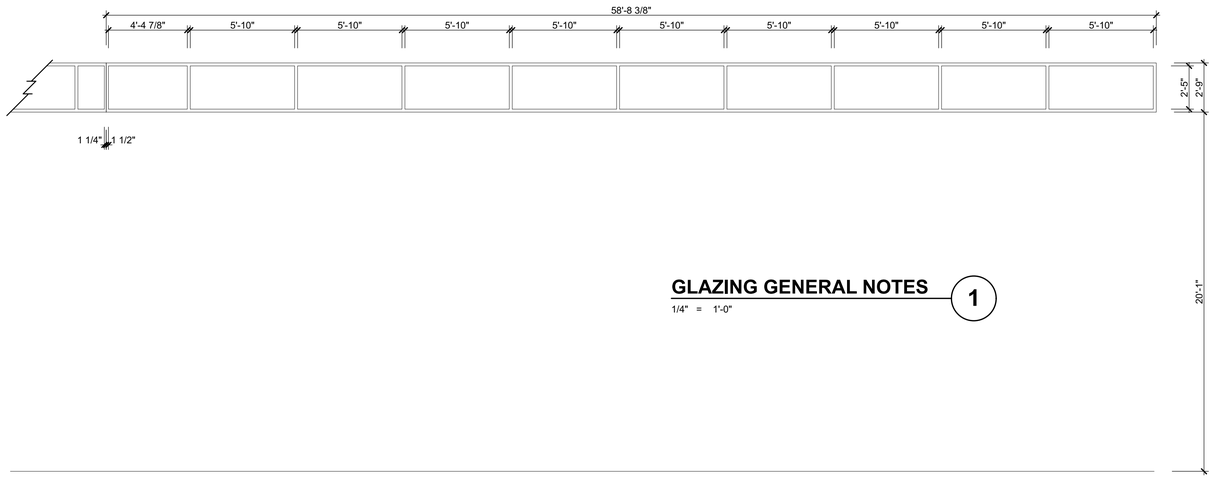

GLAZING GENERAL NOTES — 1

1/4" = 1'-0"

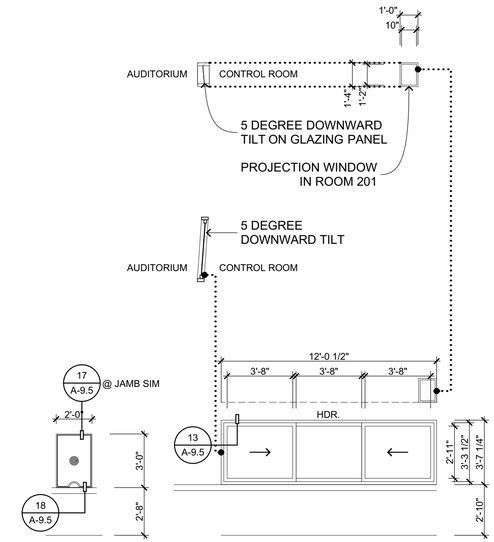

	SF1 (CONT'D)	HM6	HM7
TYPE	ALUMINUM STOREFRONT SYSTEM	ALUMINUM STOREFRONT	HOLLOW METAL FRAME
GLAZING	DOUBLE GLAZING	DOUBLE GLAZING	DOUBLE GLAZING
OPERATION	N/A	TICKET INSERT	SLIDING
RATING	N/A	N/A	N/A
NOTES	N/A	OPERABLE AT 5lb MAX	OPERABLE AT 5lb MAX

QUATTROCCHI KWOK ARCHITECTS
Main Office:
636 Fifth Street, Santa Rosa, CA 95404
Pleasanton Office:
600 Main Street, Suite E,
Pleasanton, CA 94566
(707) 576-0829

LICENSED ARCHITECT
JIM THEISS
LICENSE # C22643
EXP JUNE 30, 2021
STATE OF CALIFORNIA

SIGNED: AUGUST 13, 2019

FREEDOM HIGH SCHOOL

PERFORMING ARTS AND CTE FACILITIES

1050 NEROLY RD,
OAKLEY, CA 94561

LIBERTY UNION HIGH SCHOOL DISTRICT

ARCH PROJECT NO: 1739.00
DRAWN BY:
DRAWING SCALE:
PTN: 61721-0068

BID SET

AUGUST 13, 2019

SHEET TITLE

WINDOW SCHEDULE

SHEET NUMBER

A-8.3

BIM Server: BIMCLOUD-QKA - BIMcloud/1739.00 - Freedom High School/1739.00 FREEDOM HS Performing Arts Center:8/6/2019 4:13 PM

Provide plaster soffit attachment detail for wood structure at building B. See attached FYI

ATTACHING METAL LATH OR PAPER-BACKED WIRE FABRIC TO WOOD-FRAMED HORIZONTAL SURFACES

Developed by: CALIFORNIA LATHING & PLASTERING CONTRACTORS ASSOCIATION.

Tested and Adopted by: DIVISION OF ARCHITECTURE, STATE OF CALIFORNIA.

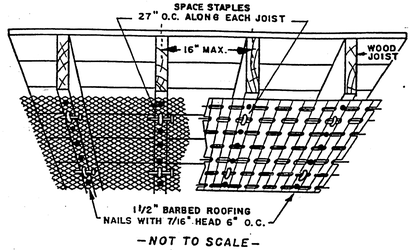

—NOT TO SCALE—

ILLUSTRATION SHOWING HOW A NAILED ON CEILING CAN BE GIVEN ADDITIONAL SUPPORT THROUGH USE OF STRONGHOLD EARTHQUAKE STAPLES, IN BUILDINGS LOCATED IN AREAS SUBJECT TO EARTHQUAKE OR OTHER DISTURBANCES.

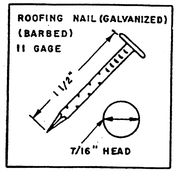

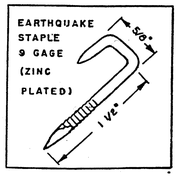

BIM

FLEX FLASHING INSTALLED BEFORE BUILDING PAPER. I

DETAIL APPLIES TO ALL FRAMED WALL PENETRATIONS

FLEX FLASH MATERIAL SHALL BE SELF SEALING, FULLY ADHERED COMPOSITE FLEX FLASH, U.O.N.

12" WIDE FLEX SILL FLASH: x LENGTH REQD TO EXTEND 12" BEYOND OPNG AS SHOWN. ATTACH AT TOP ONLY (SEE BELOW) BUILDING PAPER FLAP BENEATH. DO NOT ATTACH AT BTM.

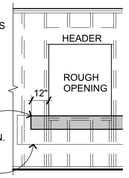

1 STEP 1 - SILL FLASHING

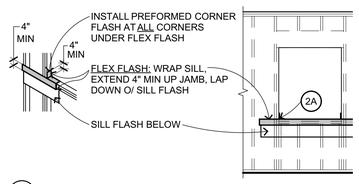

2A 2 STEP 2 - WINDOW WRAP AT SI

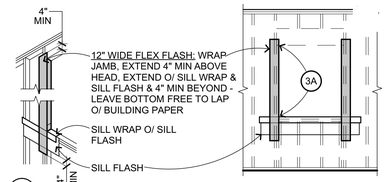

3 STEP 3 - WRAP AT JAMB

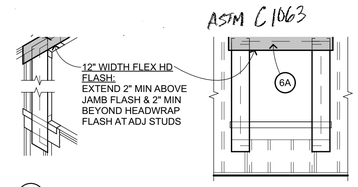

6 STEP 6 - HEAD FLASHING

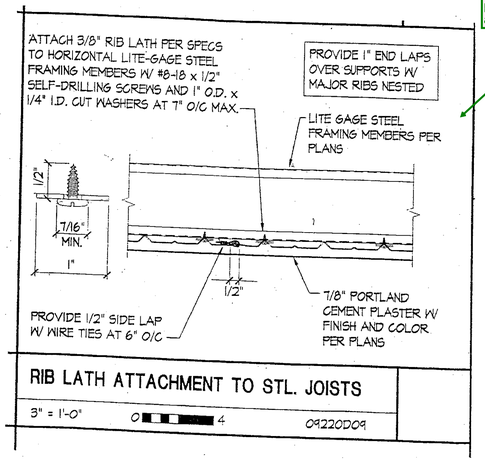

TYP FLASHING/PAPERING

1/4" = 1'-0" B201103 **10**

Provide all information per the detail attached.

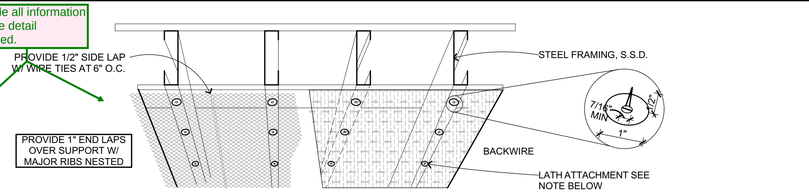

ATTACH 3/8" RIB LATH PER SPECS TO HORIZONTAL LITE-GAGE STEEL FRAMING MEMBERS W/# 8-18 x 1/2" SELF DRILLING SCREWS AND 1" O.D. x 1/4" I.D. CUT WASHERS AT 7" O.C MAX.

HORIZONTAL SOFFIT

ISOMETRIC VIEW (PER DSA PLASTER ATTACHMENT DETAIL)

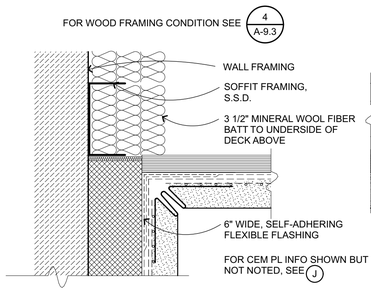

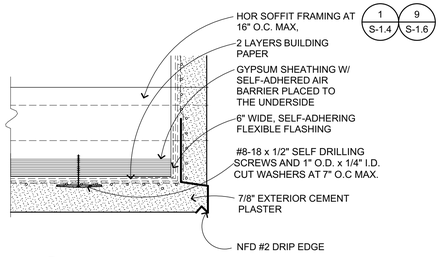

A HORIZ SOFFIT NON-CONDITIONED
VERTICAL SECTION (WD & MTL CONDITION)

B HORIZ SOFFIT at WALL - NON-CONDITIONED
VERTICAL SECTION

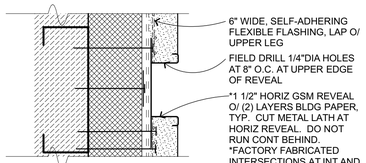

C HORIZ REVEAL
VERTICAL SECTION

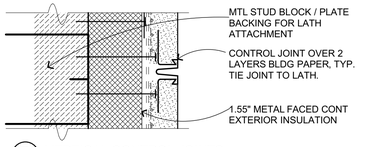

D VERTICAL CONTROL JOINTS
PLAN SECTION

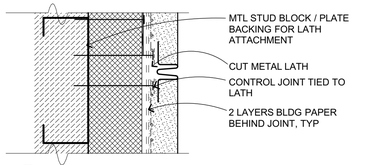

E HORIZ & DIAG CONTROL JOINTS
VERTICAL SECTION

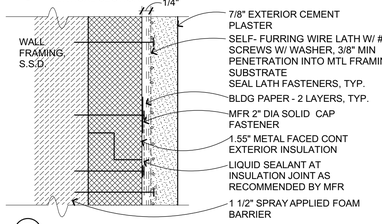

F VERTICAL CEM PLASTER SURFACES
VERTICAL SECTION

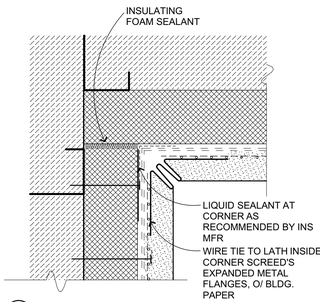

G INSIDE CORNERS
VERT PLAN SECTION SHOWN, HORIZ JT SIMILAR

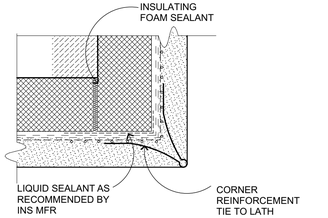

H VERT OUTSIDE CORNER
PLAN SECTION

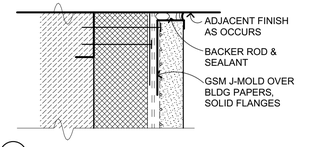

J VERT & HORIZ J-MOLDS
VERTICAL & PLAN SECTION

NOTES:

EXTERIOR WALL ASSEMBLY IS A PROPRIETARY SYSTEM, SEE PROJECT MANUAL

FOR FLASHING AT OPENINGS SEE 10 A-9.1

FOR SLIP JOINT AT FLOOR FRAMING SEE 12 A-9.1

FOR BASE OF WALL SEE 2 A-9.2

TYP CEMENT PLASTER AT METAL FRAMING

6" = 1'-0" B201410 **4**

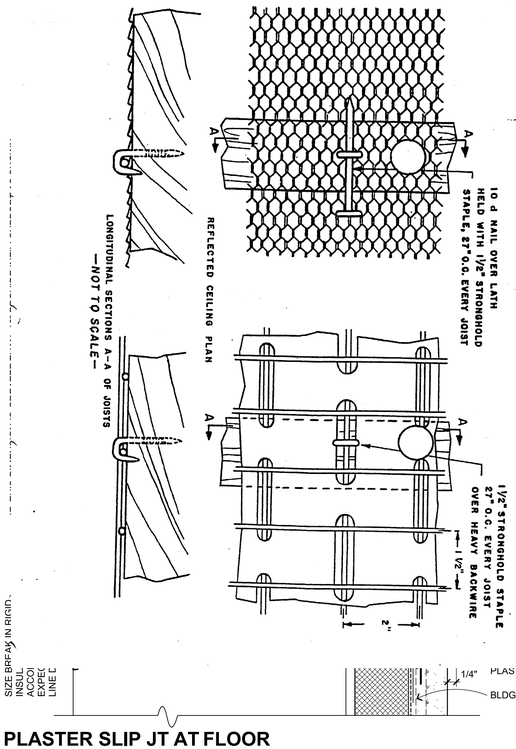

ON

ILL FRAMING, S.S.D.

ER

HING
ELOW IN WRB AT BREAK IN
JL/SHTG ENSURE WRB IS
ED TO RIGID INSUL/SHTG

1/8" MIN

ND CEMENT
PLASTER ACCESSORY, TYP.

SIZE BRFAK IN RIGID INSUL ACCOI EXPEC LINE E

NT PLASTER SLIP JT AT FLOOR

6" = 1'-0" B201404_B **12**

QUATTROCCHI KWOK ARCHITECTS

Main Office:
636 Fifth Street, Santa Rosa, CA 95404
Pleasanton Office:
600 Main Street, Suite E,
Pleasanton, CA 94566
(707) 576-0829

LICENSED ARCHITECT
JIM THEISS
LICENSE # C22643
EXP JUNE 30, 2021
STATE OF CALIFORNIA

SIGNED: AUGUST 13, 2019

FREEDOM HIGH SCHOOL

PERFORMING ARTS AND CTE FACILITIES

1050 NEROLY RD,
OAKLEY, CA 94561

LIBERTY UNION HIGH SCHOOL DISTRICT

ARCH PROJECT NO:	1739.00
DRAWN BY:	
DRAWING SCALE:	AS NOTED
PTN:	61721-0068

BID SET

AUGUST 13, 2019

SHEET TITLE

WALL DETAILS - METAL FRAMING

SHEET NUMBER

A-9.1

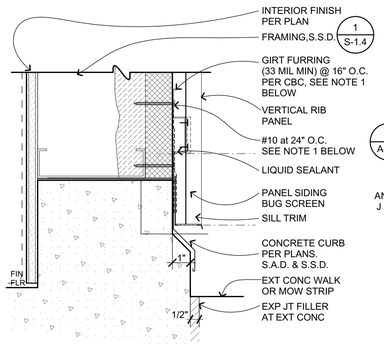

B EXTERIOR CURB

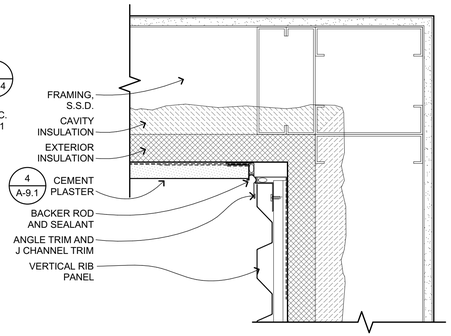

A INSIDE CORNER @ CEMENT PLASTER

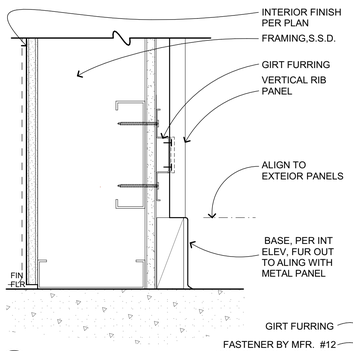

D INTERIOR BASE

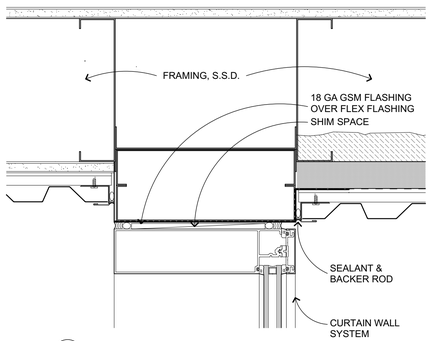

C CURTAIN WALL JAMB

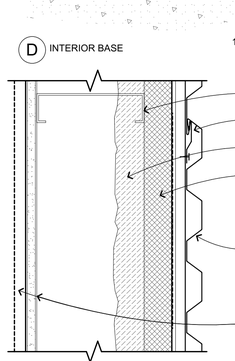

F PLAN DETAIL @ CLIP

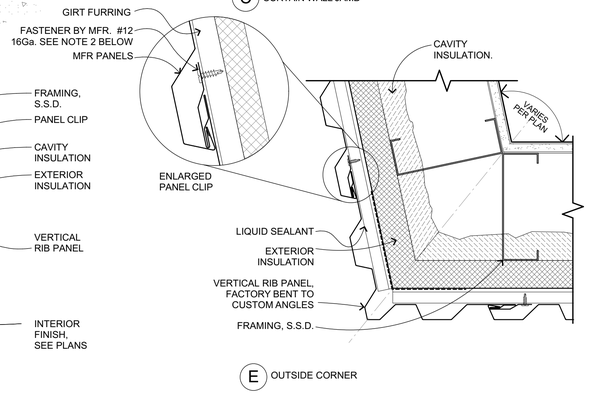

E OUTSIDE CORNER

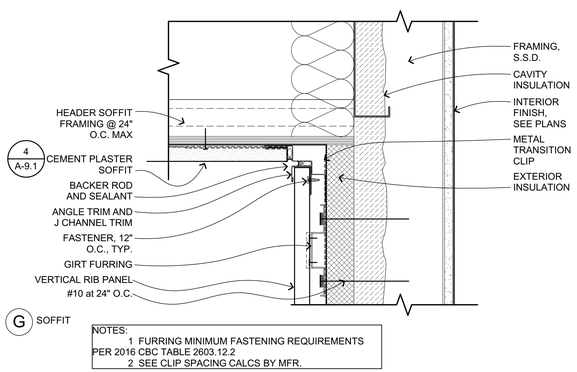

G SOFFIT

NOTES:
1 FURRING MINIMUM FASTENING REQUIREMENTS PER 2016 CBC TABLE 2603.12.2
2 SEE CLIP SPACING CALCS BY MFR.

METAL WALL PANEL

3" = 1'-0" — 16

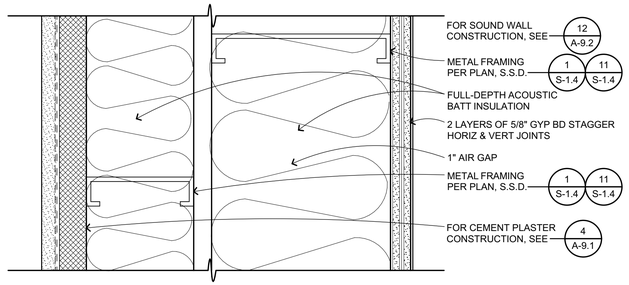

ACOUSTIC DETAIL A

3" = 1'-0" — C101130A — 5

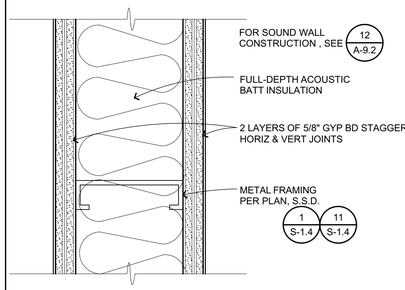

ACOUSTIC DETAIL E

3" = 1'-0" — C101130E — 10

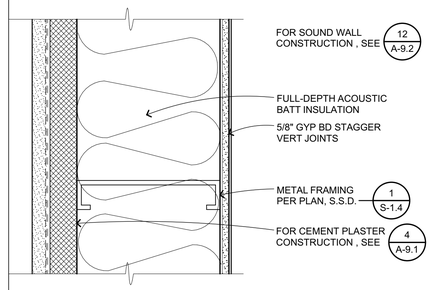

ACOUSTIC DETAIL B

3" = 1'-0" — C101130B — 6

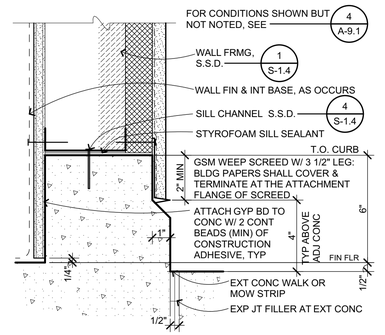

EXT. CURB-CEM PLAS MTL FRMG

3" = 1'-0" — B201411 — 2

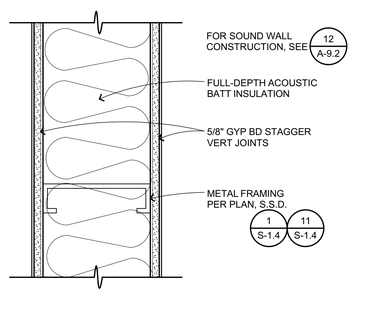

ACOUSTIC DETAIL F

3" = 1'-0" — C101130F — 11

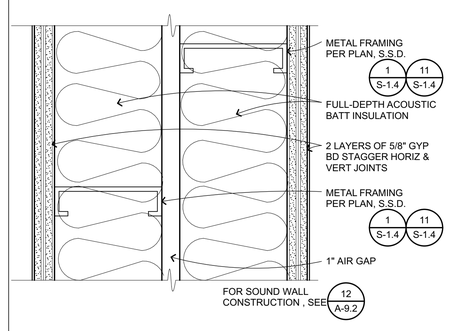

ACOUSTIC DETAIL C

3" = 1'-0" — C101130C — 7

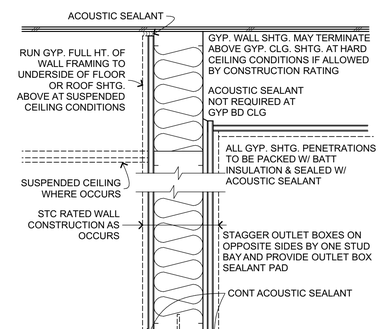

SOUND WALL CONSTRUCTION

1 1/2"= 1'-0" — C101135 — 12

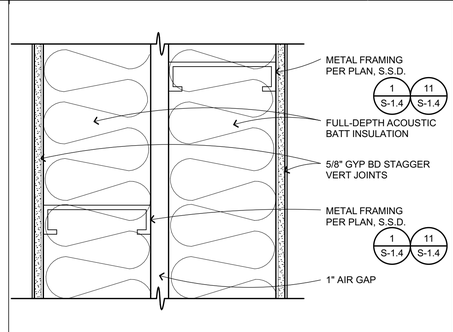

ACOUSTIC DETAIL D

3" = 1'-0" — C101130D — 8

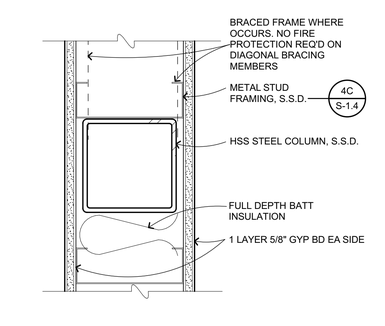

TYP INT NON RATED WALL MTL

3" = 1'-0" — C101108 — 4

QUATTROCCHI KWOK ARCHITECTS
Main Office:
636 Fifth Street, Santa Rosa, CA 95404
Pleasanton Office:
600 Main Street, Suite E,
Pleasanton, CA 94566
(707) 576-0829

LICENSED ARCHITECT
JIM THEISS
LICENSE # C22643
EXP JUNE 30, 2021
STATE OF CALIFORNIA

SIGNED: AUGUST 13, 2019

FREEDOM HIGH SCHOOL

PERFORMING ARTS AND CTE FACILITIES

1050 NEROLY RD,
OAKLEY, CA 94561

LIBERTY UNION HIGH SCHOOL DISTRICT

ARCH PROJECT NO:	1739.00
DRAWN BY:	
DRAWING SCALE:	AS NOTED
PTN:	61721-0068

BID SET

AUGUST 13, 2019

SHEET TITLE

WALL DETAILS - METAL FRAMING

SHEET NUMBER

A-9.2

BIM Server: BIMCLOUD-QKA - BIMcloud/1739.00 - Freedom High School/1739.00 FREEDOM HS Performing Arts Center.8/6/2019.3:54 PM

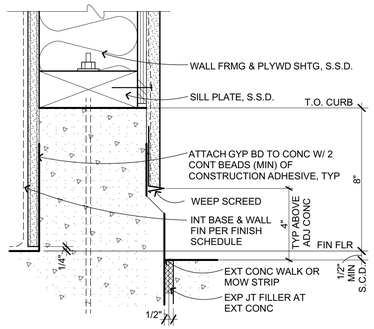

EXT CURB - CEM PLAS WD FRMG

3" = 1'-0"

B201102

13

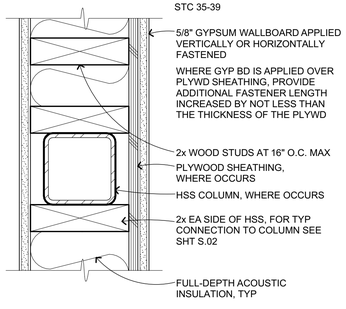

TYP INT WALL - NON-RATED

3" = 1'-0"

C101105

16

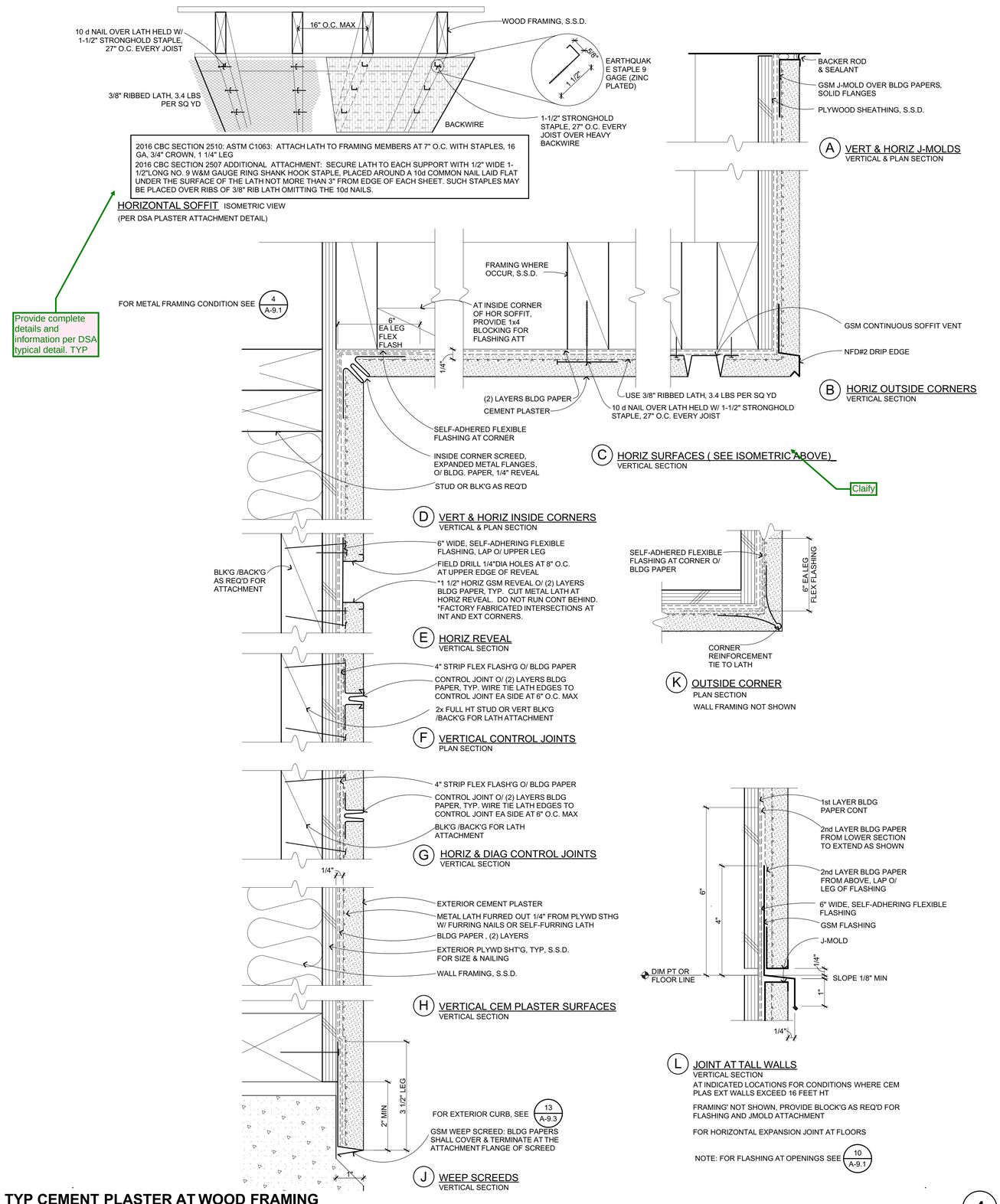

TYP CEMENT PLASTER AT WOOD FRAMING

6" = 1'-0"

B201401

4

QUATTROCCHI KWOK ARCHITECTS
Main Office:
636 Fifth Street, Santa Rosa, CA 95404
Pleasanton Office:
600 Main Street, Suite E,
Pleasanton, CA 94566
(707) 576-0829

LICENSED ARCHITECT
JIM THEISS
LICENSE # C22643
EXP JUNE 30, 2021
STATE OF CALIFORNIA

SIGNED: AUGUST 13, 2019

FREEDOM HIGH SCHOOL

PERFORMING ARTS AND CTE FACILITIES

1050 NEROLY RD,
OAKLEY, CA 94561

LIBERTY UNION HIGH SCHOOL DISTRICT

ARCH PROJECT NO:	1739.00
DRAWN BY:	
DRAWING SCALE:	AS NOTED
PTN:	61721-0068

BID SET

AUGUST 13, 2019

SHEET TITLE

WALL DETAILS - WOOD FRAMING

SHEET NUMBER

A-9.3

BIM Server: BIMCLOUD-QKA - BIMcloud/1739.00 - Freedom High School/1739.00 FREEDOM HS Performing Arts Center 8/6/2019 3:55 PM

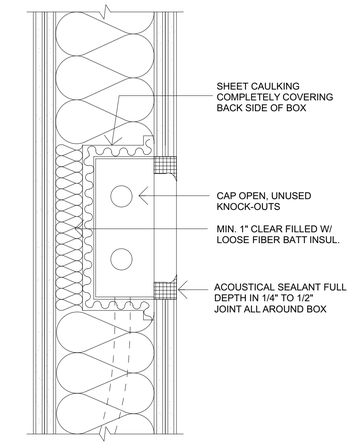

A BOX SIZE 4" X 8" AND UNDER

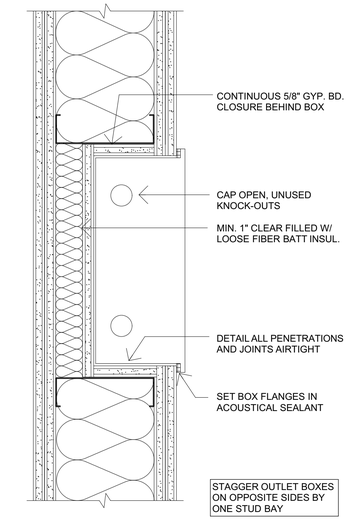

B BOX SIZE OVER 4" X 8"

AIRTIGHT RECESSES MTL

3" = 1'-0" C101137_B **15**

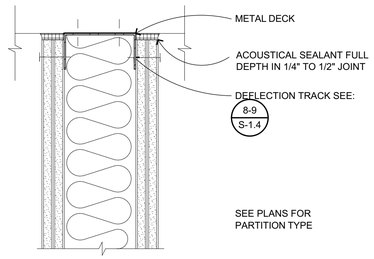

A AT FLAT SURFACE

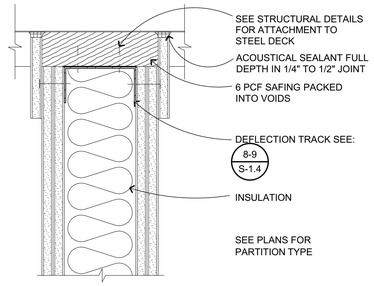

B AT STEEL DECK PERPENDICULAR TO FLUTES

AT ALL LOCATIONS, INCLUDING AIR PLENUMS, ALL OPEN STUD WALL CAVITIES AND OTHER OPENINGS TO BE SEALED TO PREVENT THE PASSAGE OF AIR AND SOUND

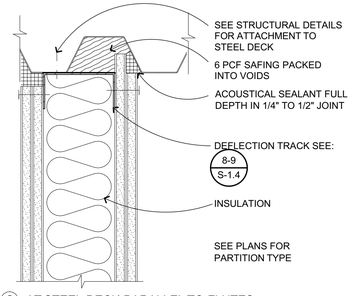

C AT STEEL DECK PARALLEL TO FLUTES

AIRTIGHT CONSTRUCTION MTL

3" = 1'-0" C101136_B **11**

FIRE WALLS, FIRE BARRIERS, FIRE PARTITIONS, SMOKE BARRIERS AND SMOKE PARTITIONS OR ANY OTHER WALL REQUIRED TO HAVE PROTECTED OPENINGS OR PENETRATIONS SHALL BE EFFECTIVELY AND PERMANENTLY IDENTIFIED WITH SIGNS OR STENCILING. SUCH IDENTIFICATION SHALL:

-BE LOCATED IN ACCESSIBLE CONCEALED FLOOR, FLOOR-CEILING OR ATTIC SPACES AND

-BE LOCATED WITHIN 15 FEET OF THE END OF EACH WALL AND AT INTERVALS NOT EXCEEDING 30 FEET MEASURED HORIZONTALLY ALONG THE WALL OR PARTITION AND

-INCLUDE LETTERING NOT LESS THAN 3 INCHES IN HEIGHT WITH A MINIMUM 3/8 INCH STROKE IN A CONTRASTING COLOR INCORPORATING THE SUGGESTED WORDING: **"FIRE AND SMOKE BARRER - PROTECT ALL OPENINGS".**

(REFERENCE CBC 2013 703.7)

FIRE RATED WALLS LABELING

1/4" = 1'-0" C101114 **5**

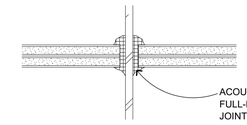

A HANGER ROD, PIPE, OR WIRE

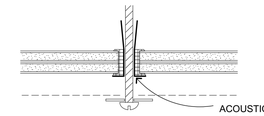

B ALL MISC. ANCHORS TYP.

AIRTIGHT SUPPORT ELEMENTS

3" = 1'-0" **6**

GYPSUM ASSOCIATION FIRE RESISTANCE DESIGN MANUAL, 21st EDITION
FLOOR-CEILING ASSEMBLY: GA FILE NO. FC 4340

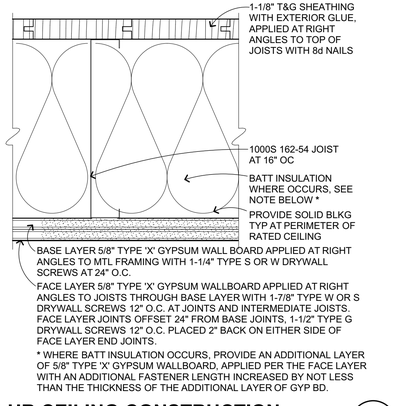

1-HR CEILING CONSTRUCTION

3" = 1'-0" B101101_A **7**

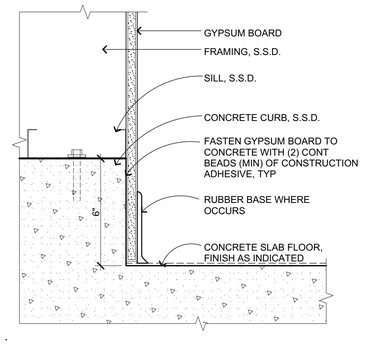

CONC CURB AT INT WALL

3" = 1'-0" C301101 **8**

GYPSUM ASSOCIATION FIRE RESISTANCE DESIGN MANUAL, 19th EDITION
GA FILE NO. WP 1350 STC 35-39

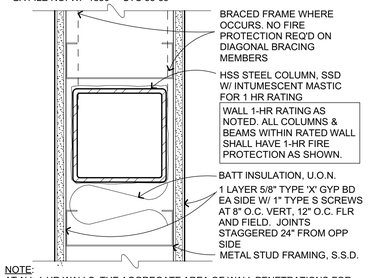

NOTE:
AT ALL 1-HR WALLS, THE AGGREGATE AREA OF WALL PENETRATIONS FOR ELECTRICAL OUTLET BOXES SHALL NOT EXCEED 100 SQ IN IN ANY 100 SQ FT OF WALL AREA. OUTLET BOXES ON OPPOSITE SIDES OF 1-HR WALLS SHALL BE SEPARATED BY A HORIZONTAL DISTANCE OF AT LEAST 24".

1-HR INT WALL METAL

3" = 1'-0" C101106 **1**

NOTE: BASIS OF DESIGN USG. UL **HW-S-0001.**
REFER TO MANUFACTURER'S PRODUCT INFORMATION FOR SPECIFIC UL ASSEMBLY, TERMINOLOGY OR DETAILS.

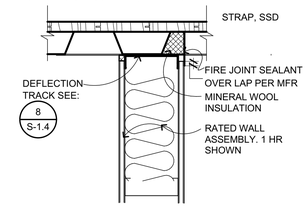

1 HR MTL WALL AT MTL DECK II

1 1/2"= 1'-0" C101112 **2**

NOTE: BASIS OF DESIGN USG. UL **HW-S-0001.**
REFER TO MANUFACTURER'S PRODUCT INFORMATION FOR SPECIFIC UL ASSEMBLY, TERMINOLOGY OR DETAILS.

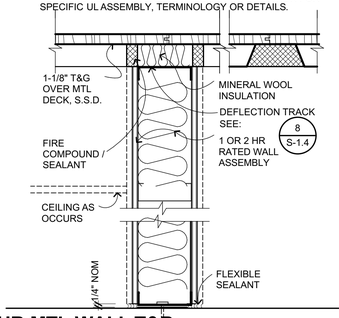

1 HR MTL WALL T&B

1 1/2"= 1'-0" C101111 **3**

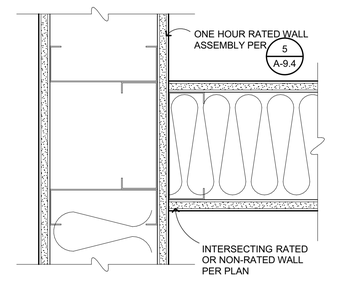

RATED WALL INTERSECTION

3" = 1'-0" C101115 **4**

QUATTROCCHI KWOK ARCHITECTS
Main Office:
636 Fifth Street, Santa Rosa, CA 95404
Pleasanton Office:
600 Main Street, Suite E,
Pleasanton, CA 94566
(707) 576-0829

LICENSED ARCHITECT
JIM THEISS
LICENSE # C22643
EXP JUNE 30, 2021
STATE OF CALIFORNIA

SIGNED: AUGUST 13, 2019

FREEDOM HIGH SCHOOL

PERFORMING ARTS AND CTE FACILITIES

1050 NEROLY RD,
OAKLEY, CA 94561

LIBERTY UNION HIGH SCHOOL DISTRICT

ARCH PROJECT NO:	1739.00
DRAWN BY:	
DRAWING SCALE:	AS NOTED
PTN:	61721-0068

BID SET

AUGUST 13, 2019

SHEET TITLE

GENERAL WALL DETAILS

SHEET NUMBER

A-9.4

BIM Server: BIMCLOUD-QKA - BIMcloud/1739.00 - Freedom High School/1739.00 FREEDOM HS Performing Arts Center.8i6/2019,3:54 PM

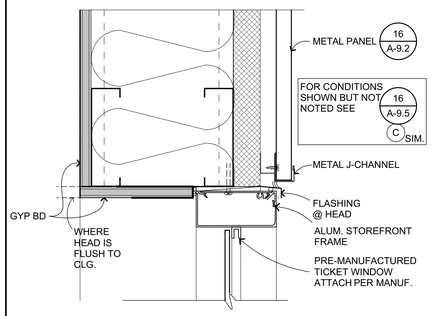

TICKET WINDOW HEAD, JAMB SIM

3" = 1'-0" B202113 **17**

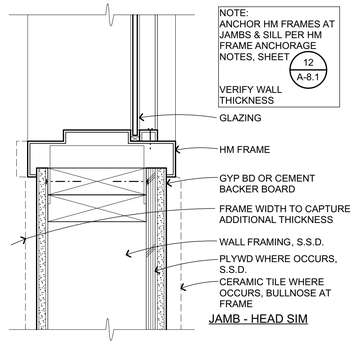

INTERIOR HM WINDOW

3" = 1'-0" C102301 **13**

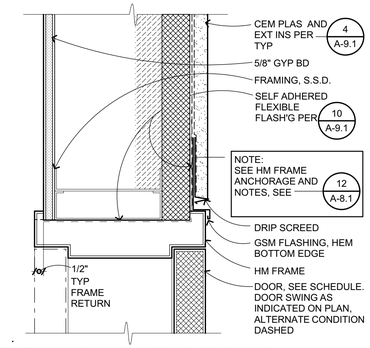

EXT HM DOOR HEAD EXT INS

3" = 1'-0" B203101_B **1**

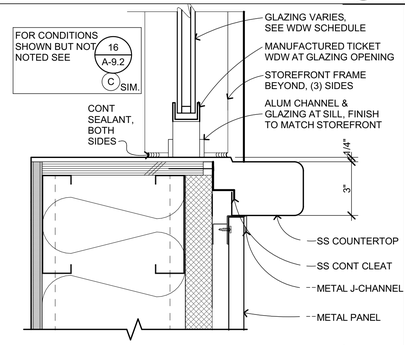

TICKET WINDOW SILL

3" = 1'-0" B202112 **18**

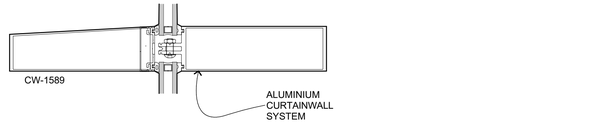

A (4) HORIZONTAL MULLIONS, SEE EXT. ELEVS.

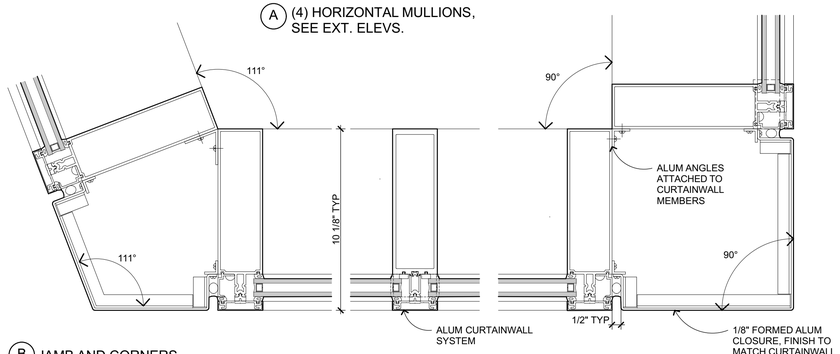

B JAMB AND CORNERS

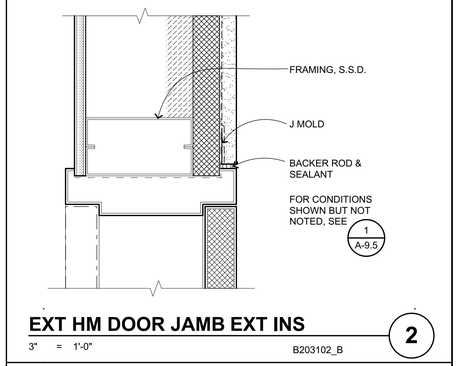

EXT HM DOOR JAMB EXT INS

3" = 1'-0" B203102_B **2**

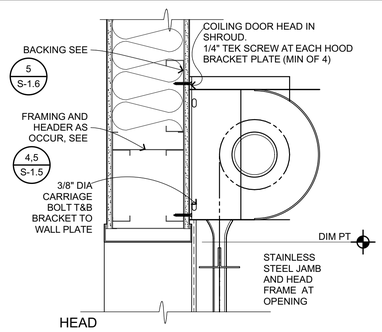

HEAD

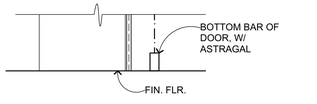

SILL

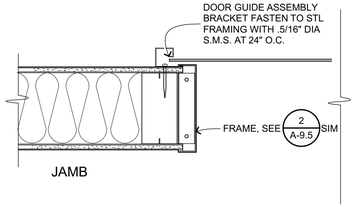

JAMB

COILING DOOR

1 1/2"= 1'-0" 1739 **20**

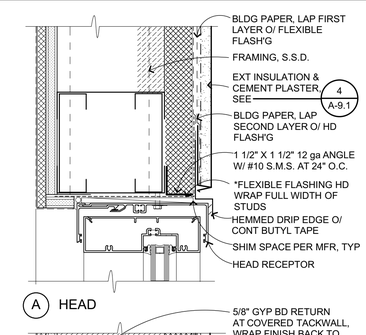

A HEAD

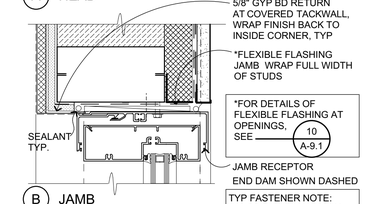

B JAMB

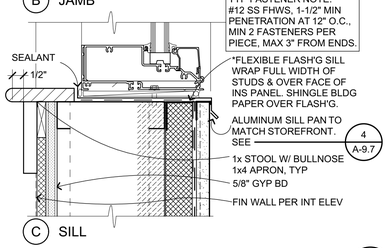

C SILL

6" ALUM STOREFRONT EXT INS

3" = 1'-0" B202101_B **16**

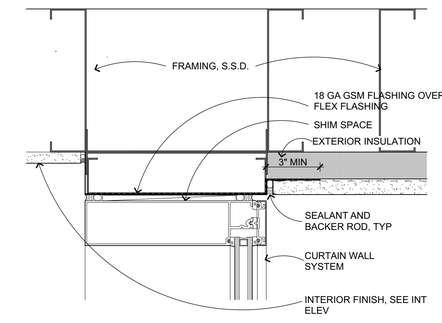

D CURTAIN WALL JAMB @ INSIDE CORNER

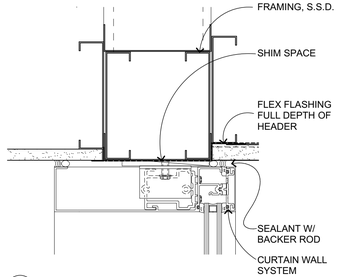

C CURTAIN WALL HEAD INTERIOR HEAD SIMILAR

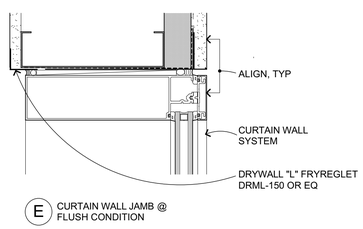

E CURTAIN WALL JAMB @ FLUSH CONDITION

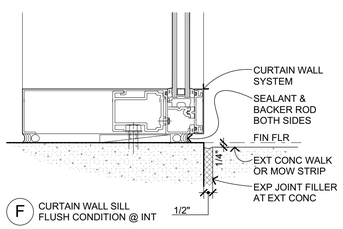

F CURTAIN WALL SILL FLUSH CONDITION @ INT

CURTAIN WALL (CURTAIN WALL IS A DEFERRED APPROVAL)

3" = 1'-0" **8**

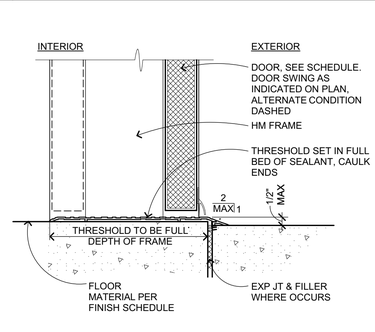

THRESHOLD

3" = 1'-0" B203103 **3**

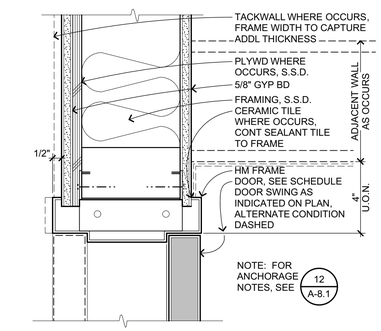

INT HM HEAD/JAMB

3" = 1'-0" C102501 **4**

QUATTROCCHI KWOK ARCHITECTS
Main Office:
636 Fifth Street, Santa Rosa, CA 95404
Pleasanton Office:
600 Main Street, Suite E,
Pleasanton, CA 94566
(707) 576-0829

LICENSED ARCHITECT
JIM THEISS
LICENSE # C22643
EXP JUNE 30, 2021
STATE OF CALIFORNIA

SIGNED: AUGUST 13, 2019

FREEDOM HIGH SCHOOL

PERFORMING ARTS AND CTE FACILITIES

1050 NEROLY RD,
OAKLEY, CA 94561

LIBERTY UNION HIGH SCHOOL DISTRICT

ARCH PROJECT NO:	1739.00
DRAWN BY:	
DRAWING SCALE:	AS NOTED
PTN:	61721-0068

BID SET

AUGUST 13, 2019

SHEET TITLE

OPENING DETAILS - METAL FRAMING

SHEET NUMBER

A-9.5

BIM Server: BIMCLOUD-QKA - BIMcloud/1739.00 - Freedom High School/1739.00 FREEDOM HS Performing Arts Center-8/6/2019-3:56 PM

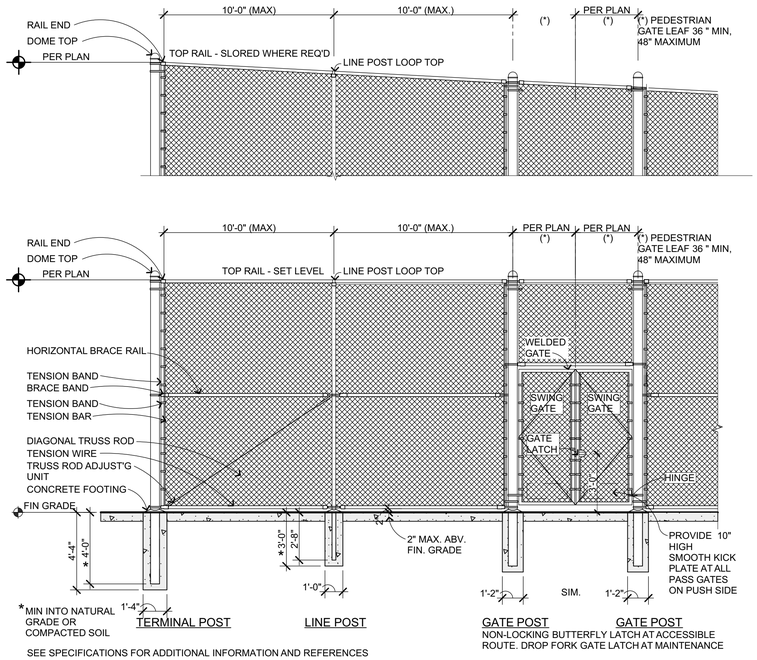

SEE SPECIFICATIONS FOR ADDITIONAL INFORMATION AND REFERENCES

CHAIN LINK FENCE AND GATE

1/4" = 1'-0"

10

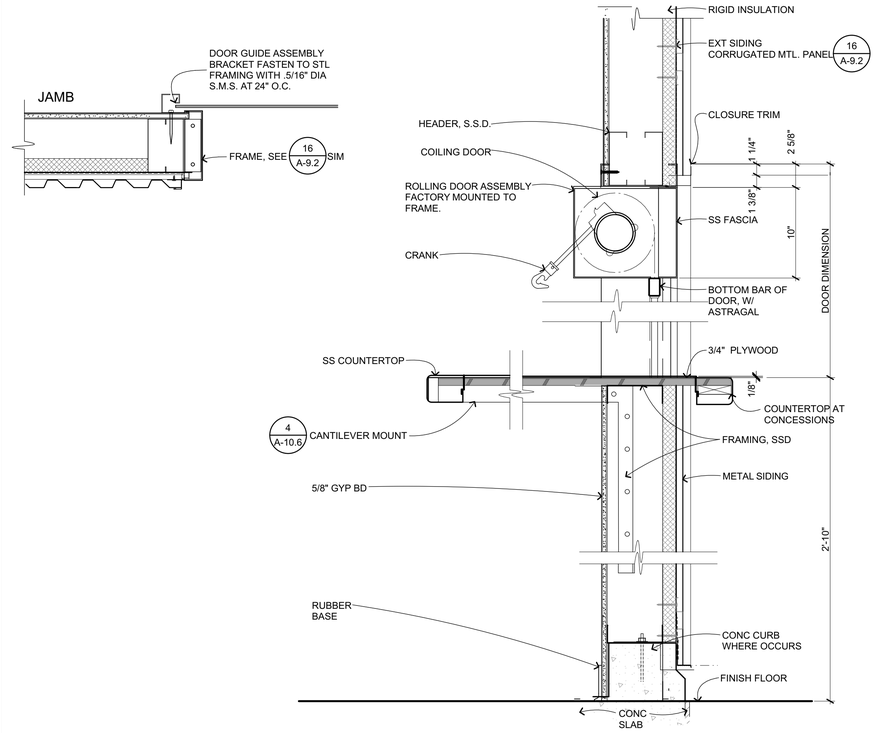

ROLL-UP DOOR HEAD/SILL - MTL FRMG

1 1/2"= 1'-0"

C102505

2

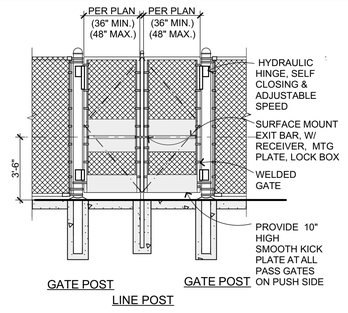

SEE SPECIFICATIONS FOR ADDITIONAL INFORMATION AND REFERENCES

CHAIN LINK DBL EXIT GATE

1/4" = 1'-0"

G204101.1

11

QUATTROCCHI KWOK ARCHITECTS
Main Office:
636 Fifth Street, Santa Rosa, CA 95404
Pleasanton Office:
600 Main Street, Suite E,
Pleasanton, CA 94566
(707) 576-0829

LICENSED ARCHITECT
JIM THEISS
LICENSE # C22643
EXP JUNE 30, 2021
STATE OF CALIFORNIA

SIGNED: AUGUST 13, 2019

FREEDOM HIGH SCHOOL

PERFORMING ARTS AND CTE FACILITIES

1050 NEROLY RD,
OAKLEY, CA 94561

LIBERTY UNION HIGH SCHOOL DISTRICT

ARCH PROJECT NO:	1739.00
DRAWN BY:	
DRAWING SCALE:	AS NOTED
PTN:	61721-0068

BID SET

AUGUST 13, 2019

SHEET TITLE

OPENING DETAILS - METAL FRAMING

SHEET NUMBER

A-9.6

BIM Server: BIMCLOUD-QKA - BIMcloud/1739.00 - Freedom High School/1739.00 FREEDOM HS Performing Arts Center;8/6/2019 4:33 PM

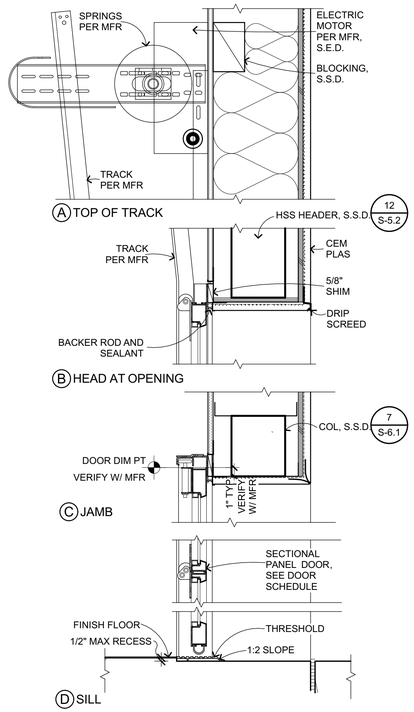

SECTIONAL DOOR @ CTE

1 1/2"= 1'-0" B203401A **10**

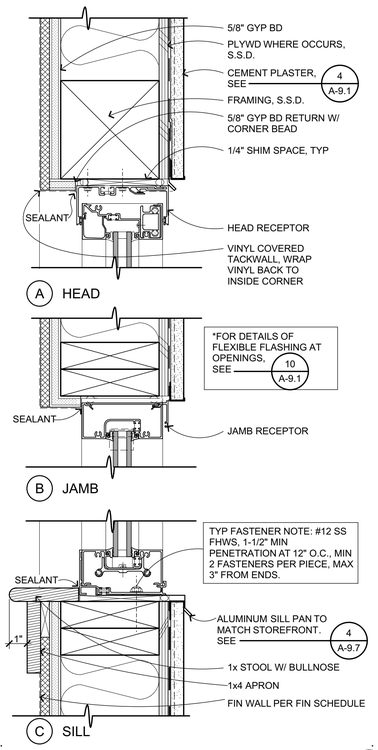

4" ALUM STOREFRONT HD/JMB/SILL

3" = 1'-0" B202101_A **6**

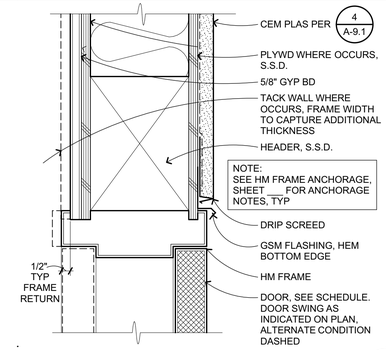

EXT HM DR HEAD

3" = 1'-0" B203101_A **1**

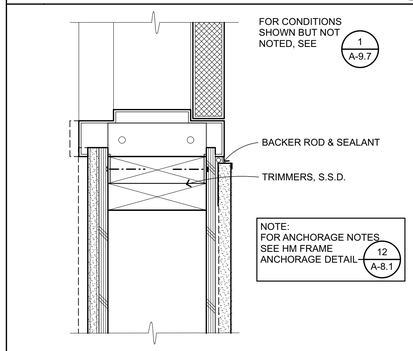

EXT HM JAMB

3" = 1'-0" B203102_A **2**

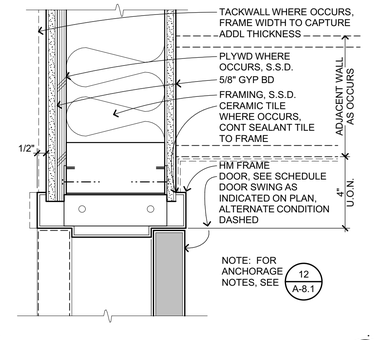

INT HM HEAD/JAMB

3" = 1'-0" C102501 **8**

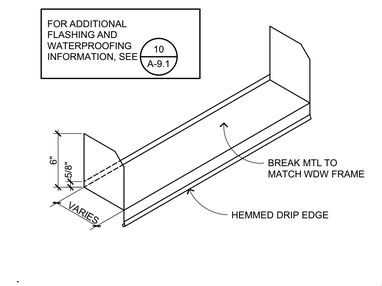

SILL PAN

1 1/2"= 1'-0" B201105 **4**

QUATTROCCHI KWOK ARCHITECTS
Main Office:
636 Fifth Street, Santa Rosa, CA 95404
Pleasanton Office:
600 Main Street, Suite E,
Pleasanton, CA 94566
(707) 576-0829

LICENSED ARCHITECT
JIM THEISS
LICENSE # C22643
EXP JUNE 30, 2021
STATE OF CALIFORNIA

SIGNED: AUGUST 13, 2019

FREEDOM HIGH SCHOOL

PERFORMING ARTS AND CTE FACILITIES

1050 NEROLY RD,
OAKLEY, CA 94561

LIBERTY UNION HIGH SCHOOL DISTRICT

ARCH PROJECT NO:	1739.00
DRAWN BY:	
DRAWING SCALE:	AS NOTED
PTN:	61721-0068

BID SET

AUGUST 13, 2019

SHEET TITLE

OPENING DETAILS - WOOD FRAMING

SHEET NUMBER

A-9.7

BIM Server: BIMCLOUD-QKA - BIMcloud/1739.00 - Freedom High School/1739.00 FREEDOM HS Performing Arts Center;8/6/2019 4:02 PM

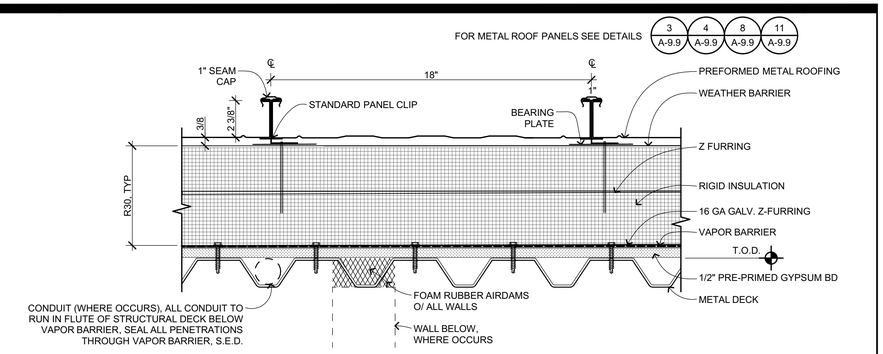

PREFORMED METAL ROOFING O/ CONDITIONED SPACE

3" = 1'-0" B301119B-1622.00 **1**

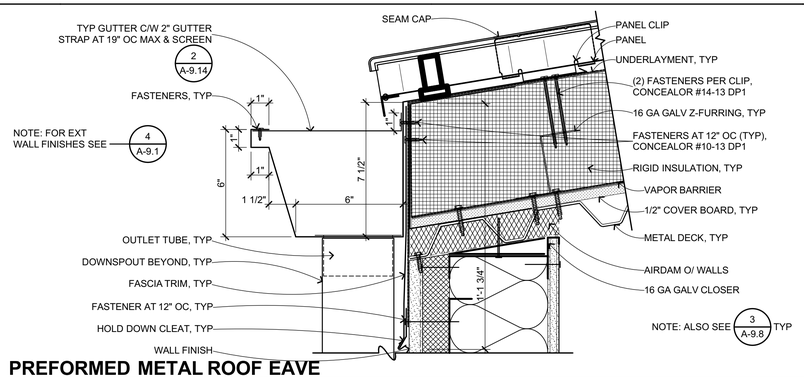

PREFORMED METAL ROOF EAVE

3" = 1'-0" B301134 **2**

Clarify/verify clip and furring spacing shall match. Refer to 3/A-9.9

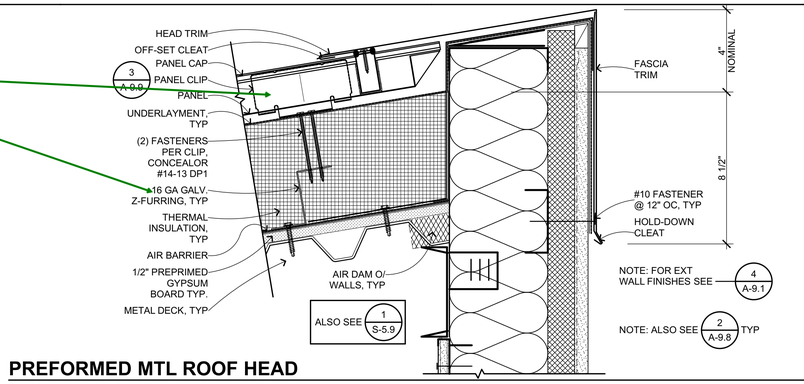

PREFORMED MTL ROOF HEAD

3" = 1'-0" B301132 **3**

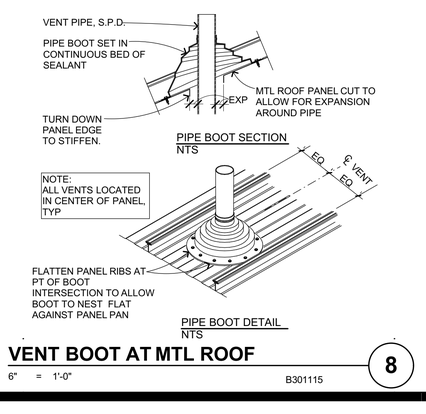

VENT BOOT AT MTL ROOF

6" = 1'-0" B301115 **8**

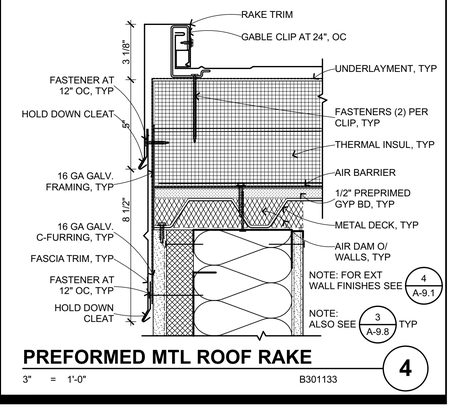

PREFORMED MTL ROOF RAKE

3" = 1'-0" B301133 **4**

QUATTROCCHI KWOK ARCHITECTS
Main Office:
636 Fifth Street, Santa Rosa, CA 95404
Pleasanton Office:
600 Main Street, Suite E,
Pleasanton, CA 94566
(707) 576-0829

LICENSED ARCHITECT
JIM THEISS
LICENSE # C22643
EXP JUNE 30, 2021
STATE OF CALIFORNIA

SIGNED: AUGUST 13, 2019

FREEDOM HIGH SCHOOL

PERFORMING ARTS AND CTE FACILITIES

1050 NEROLY RD,
OAKLEY, CA 94561

LIBERTY UNION HIGH SCHOOL DISTRICT

ARCH PROJECT NO:	1739.00
DRAWN BY:	
DRAWING SCALE:	AS NOTED
PTN:	61721-0068

BID SET

AUGUST 13, 2019

SHEET TITLE

METAL ROOFING DETAILS

SHEET NUMBER

A-9.8

BIM Server: BIMCLOUD-QKA - BIMcloud/1739.00 - Freedom High School/1739.00 FREEDOM HS Performing Arts Center;8/6/2019 4:02 PM

ERECTOR NOTE:

DRY IN SUBSTRATE WITH ICE AND WATER SHIELD PRIOR TO INSTALLING PANELS. BEGIN INSTALLATION AT EAVE, WORKING UP ROOF SLOPE, KEEPING IN MIND TO ALWAYS DIRECTING WATER TO SHED PROPERLY. ALL EXPOSED SCREW-TYPE FASTENERS SHALL HAVE NEOPRENE WASHERS. ALL POP-RIVETS SHALL BE WATERPROOF. ALL FASTENERS APPROVED BY ROOF MFR. ALL FLASHINGS SHALL BE PREFINISHED TO MATCH METAL ROOF SYSTEM.

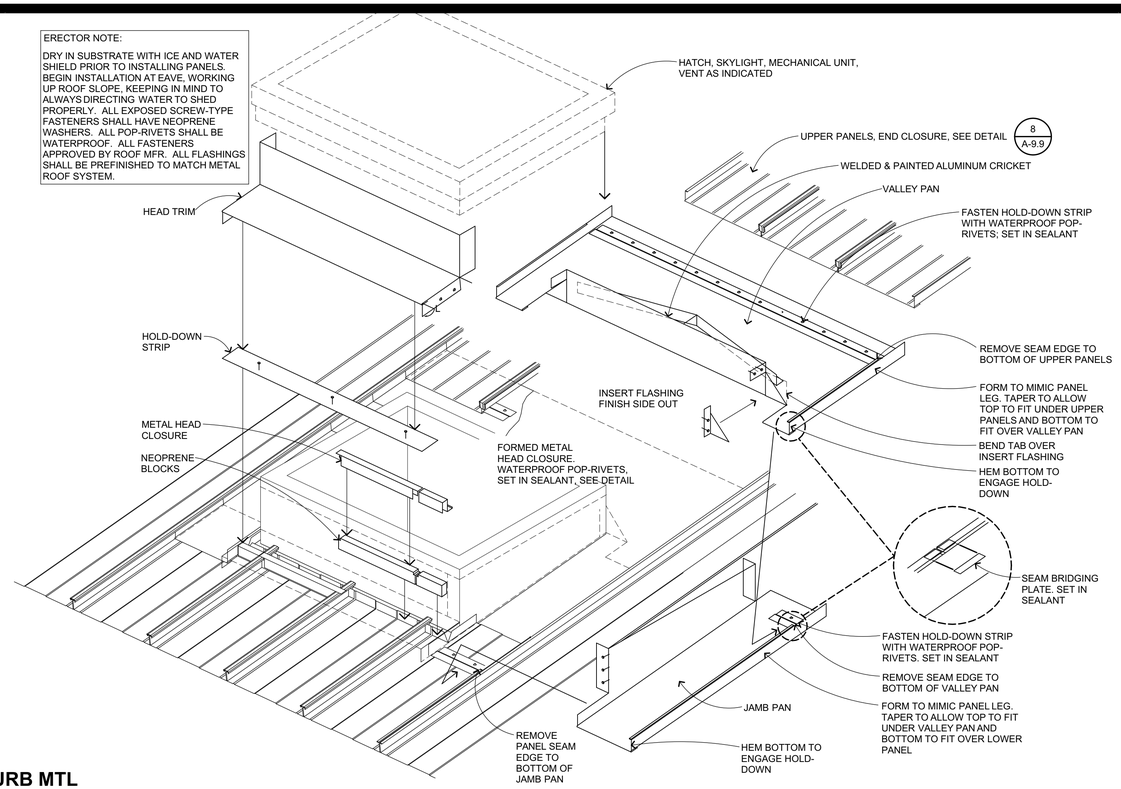

ROOF CURB MTL

6" = 1'-0"

B301130

2

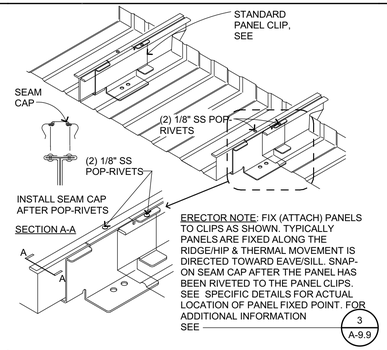

MTL ROOF FIXED PANEL-RMER SPAN

1 1/2"= 1'-0"

B301117

11

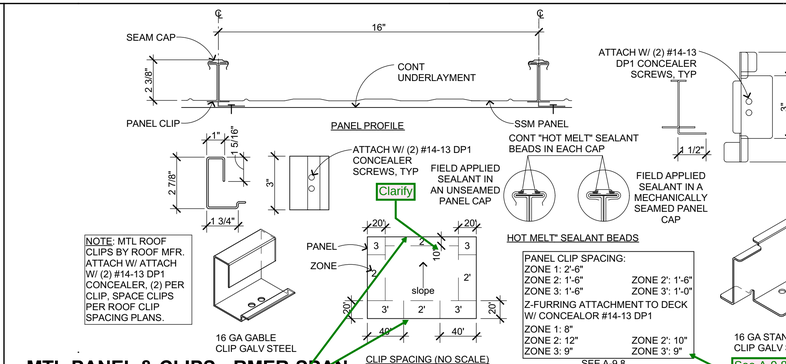

MTL PANEL & CLIPS - RMER SPAN

3" = 1'-0"

B301116

3

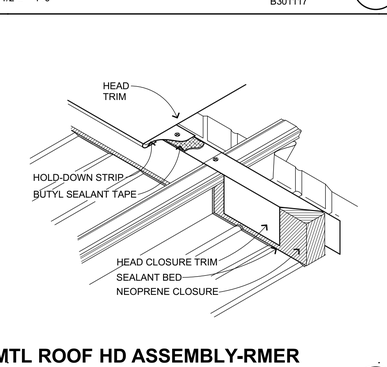

MTL ROOF HD ASSEMBLY-RMER SPAN

3" = 1'-0"

B301113

12

Clarify what is the difference between the two edges.

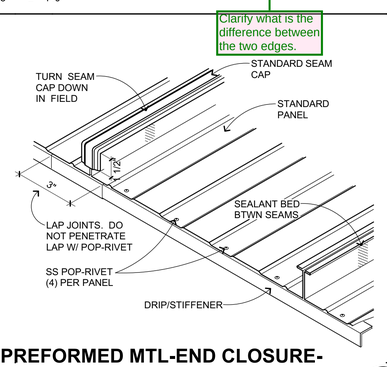

PREFORMED MTL-END CLOSURE-RMER SPAN

3" = 1'-0"

B301114

8

1. STANDING SEAM METAL ROOFING CLIPS TO BE SECURED PER 3 A-9.9

2. ALL OTHER FASTENERS FOR FLASHING AND APPURTENANCES SHALL EXTEND 1/2" MINIMUM BEYOND WALL OF METAL FRAMING OR SOLID BACKING AND SHALL PENETRATE 1 1/2" MINIMUM INTO WOOD FRAMING OR SOLID BLOCKING. FASTENERS SHALL BE #10 MINIMUM SCREWS OF APPROVED TYPE (STAINLESS STEEL WITH NEOPRENE WASHERS WHERE EXPOSED).

3. ISOLATE ALL GSM AND OTHER FERROUS FLASHINGS AND FASTENERS FROM NON-FERROUS MATERIALS WITH SELF - ADHERED FLEXIBLE MEMBRANE.

TYP MTL ROOF NOTES

3" = 1'-0"

B301118

4

QUATTROCCHI KWOK ARCHITECTS

Main Office:
636 Fifth Street, Santa Rosa, CA 95404
Pleasanton Office:
600 Main Street, Suite E,
Pleasanton, CA 94566
(707) 576-0829

LICENSED ARCHITECT
JIM THEISS
LICENSE # C22643
EXP JUNE 30, 2021
STATE OF CALIFORNIA

SIGNED: AUGUST 13, 2019

FREEDOM HIGH SCHOOL

PERFORMING ARTS AND CTE FACILITIES

1050 NEROLY RD,
OAKLEY, CA 94561

LIBERTY UNION HIGH SCHOOL DISTRICT

ARCH PROJECT NO:	1739.00
DRAWN BY:	
DRAWING SCALE:	AS NOTED
PTN:	61721-0068

BID SET

AUGUST 13, 2019

SHEET TITLE

METAL ROOFING DETAILS

SHEET NUMBER

A-9.9

BIM Server: BIMCLOUD-QKA - BIMcloud/1739.00 - Freedom High School/1739.00 FREEDOM HS Performing Arts Center;8/6/2019;4:03 PM

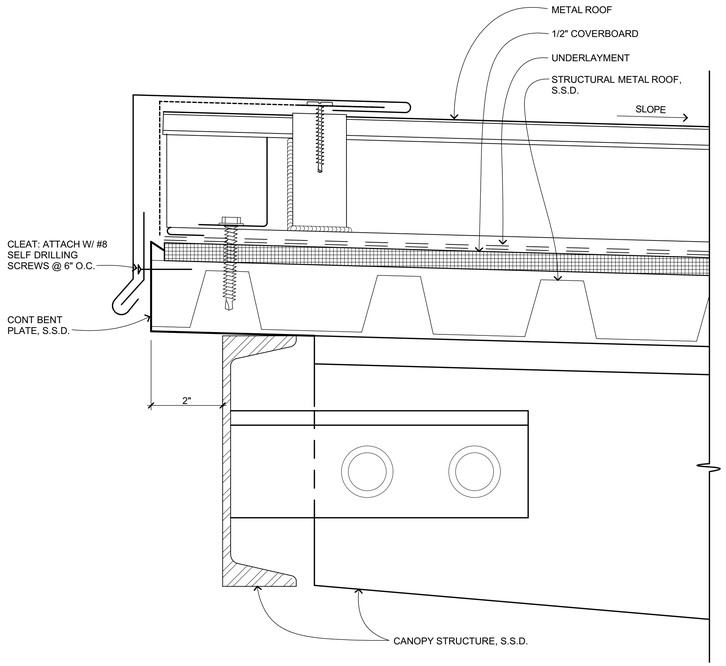

PREFORMED MTL ROOF HEAD - UNCONDITIONED

6" = 1'-0" B301104 **14**

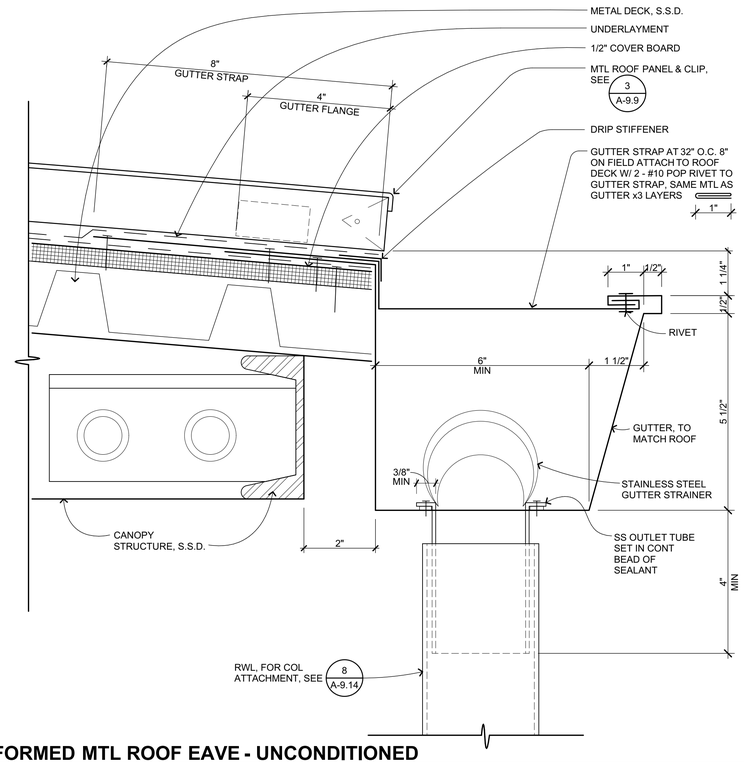

PREFORMED MTL ROOF EAVE - UNCONDITIONED

6" = 1'-0" B304101-1732.00 **6**

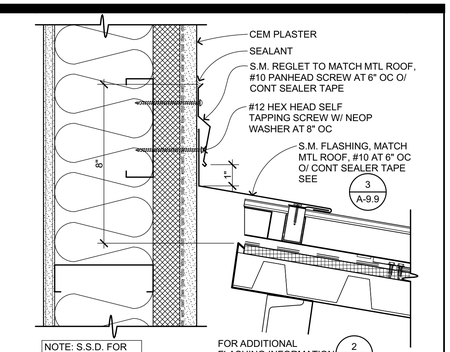

MTL ROOF FIXED HD

3" = 1'-0" B301112A **1**

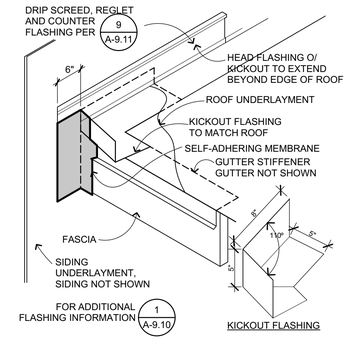

KICKOUT FLASHING

1 1/2"= 1'-0" B301220 **2**

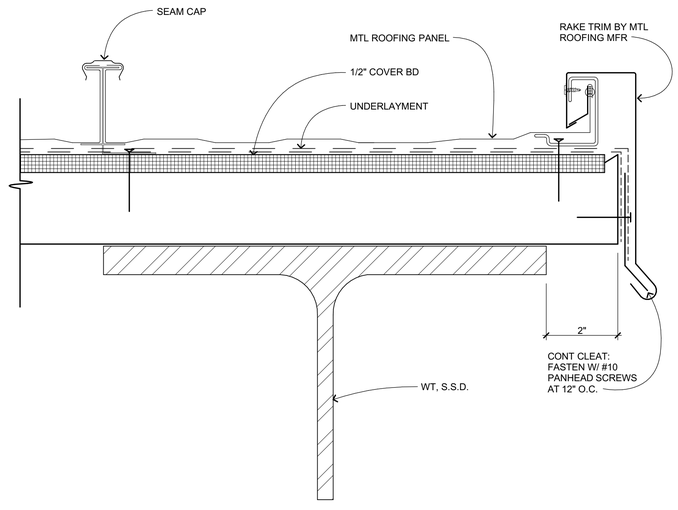

PREFORMED MTL ROOF RAKE - UNCONDITIONED

6" = 1'-0" B301103 **8**

QUATTROCCHI KWOK ARCHITECTS
Main Office:
636 Fifth Street, Santa Rosa, CA 95404
Pleasanton Office:
600 Main Street, Suite E,
Pleasanton, CA 94566
(707) 576-0829

LICENSED ARCHITECT
JIM THEISS
LICENSE # C22643
EXP JUNE 30, 2021
STATE OF CALIFORNIA

SIGNED: AUGUST 13, 2019

FREEDOM HIGH SCHOOL

PERFORMING ARTS AND CTE FACILITIES

1050 NEROLY RD,
OAKLEY, CA 94561

LIBERTY UNION HIGH SCHOOL DISTRICT

ARCH PROJECT NO: 1739.00
DRAWN BY:
DRAWING SCALE: AS NOTED
PTN: 61721-0068

BID SET

AUGUST 13, 2019

SHEET TITLE

METAL ROOFING DETAILS - UNCONDITIONED

SHEET NUMBER

A-9.10

BIM Server: BIMCLOUD-QKA - BIMcloud/1739.00 - Freedom High School/1739.00 FREEDOM HS Performing Arts Center;8/6/2019 4:03 PM

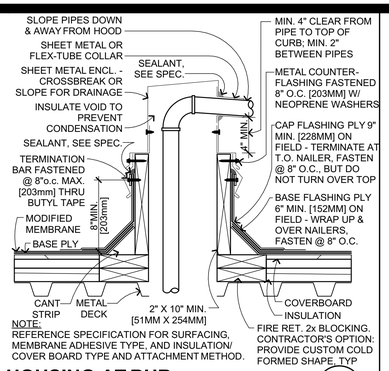

NOTE:
REFERENCE SPECIFICATION FOR SURFACING, MEMBRANE ADHESIVE TYPE, AND INSULATION/ COVER BOARD TYPE AND ATTACHMENT METHOD.

PIPE HOUSING AT BUR

1 1/2"= 1'-0" 1730.B05 **13**

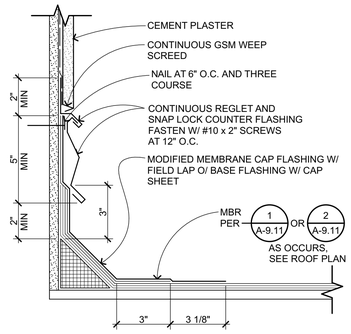

REGLET COUNTER FLASHING

3" = 1'-0" B301208 **9**

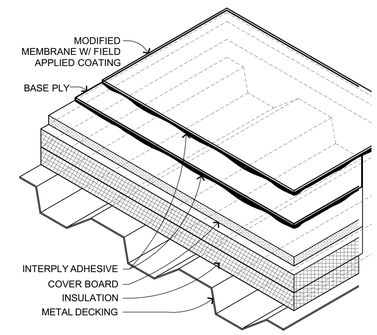

COATED SURFACE AT TYP MTL DECK

3" = 1'-0" 1730.B19 **5**

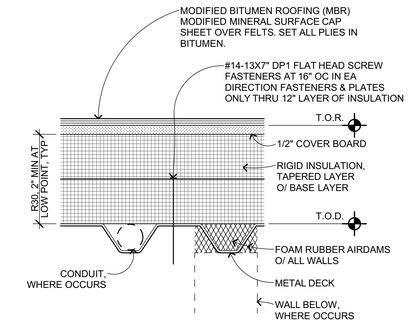

MBR AT TYP MTL DECK

3" = 1'-0" B301205A **1**

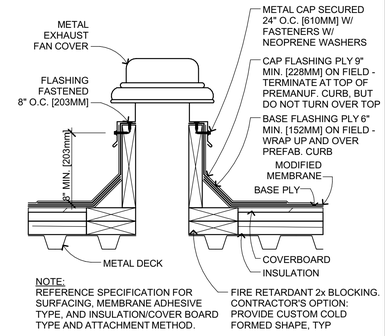

NOTE:
REFERENCE SPECIFICATION FOR SURFACING, MEMBRANE ADHESIVE TYPE, AND INSULATION/COVER BOARD TYPE AND ATTACHMENT METHOD.

EXHAUST FAN AT BUR

1 1/2"= 1'-0" 1730.B03 **14**

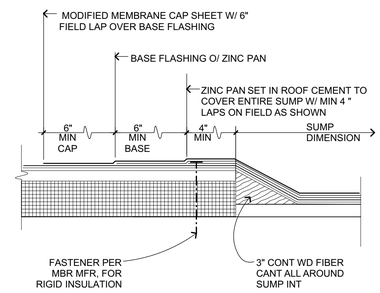

ROOF DRAIN EDGE

3" = 1'-0" B304303 **10**

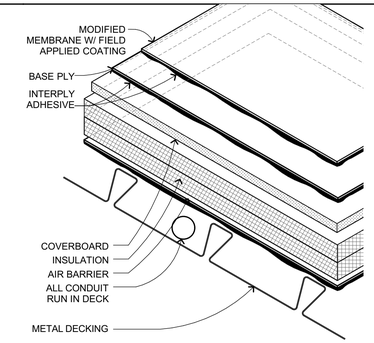

COATED SURFACE AT DOVETAIL DECK

3" = 1'-0" 1730.B16 **6**

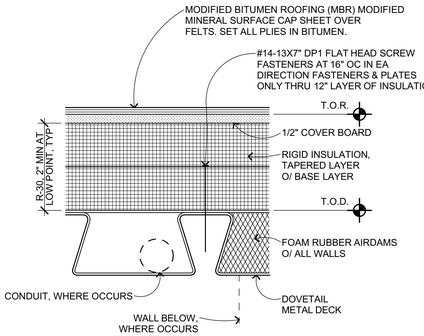

MBR AT DOVETAIL MTL DECK

3" = 1'-0" B301205B **2**

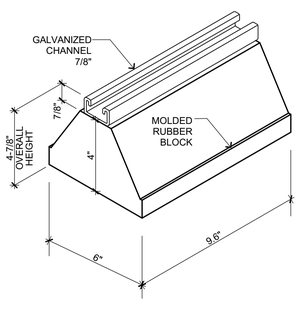

PIPE SUPPORT

3" = 1'-0" 1730.B24-1730.00 **19**

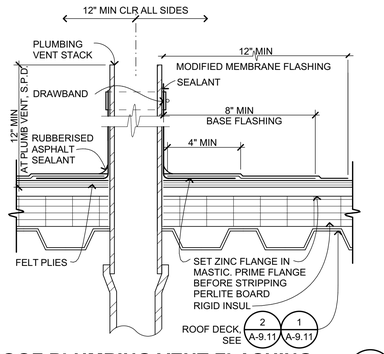

ROOF PLUMBING VENT FLASHING

3" = 1'-0" B301214-1730.00 **15**

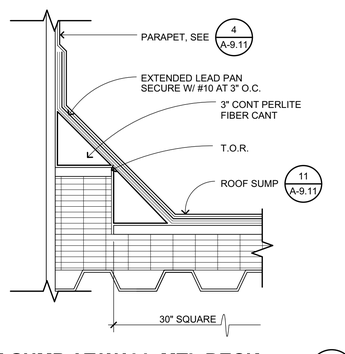

ROOF SUMP AT WALL-MTL DECK

3" = 1'-0" B301213 **11**

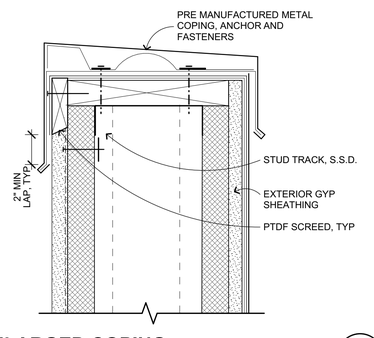

ENLARGED COPING

3" = 1'-0" B301204.1A **7**

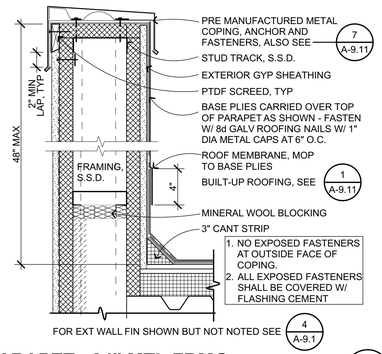

PARAPET <24" MTL FRMG

1 1/2"= 1'-0" B301204.1 **3**

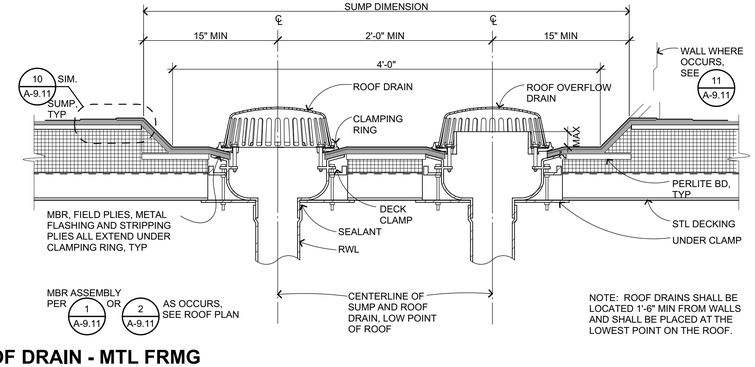

NOTE: ROOF DRAINS SHALL BE LOCATED 1'-6" MIN FROM WALLS AND SHALL BE PLACED AT THE LOWEST POINT ON THE ROOF.

ROOF DRAIN - MTL FRMG

1 1/2"= 1'-0" B304302_B **16**

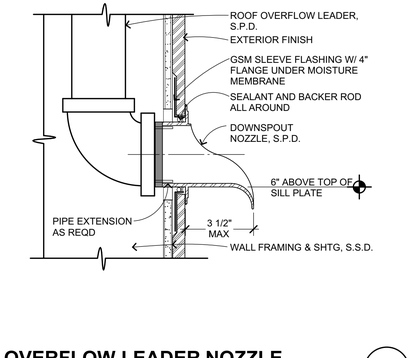

OVERFLOW LEADER NOZZLE

3" = 1'-0" B304214 **12**

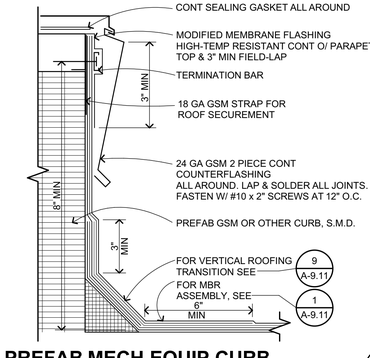

PREFAB MECH EQUIP CURB

3" = 1'-0" B301209 **8**

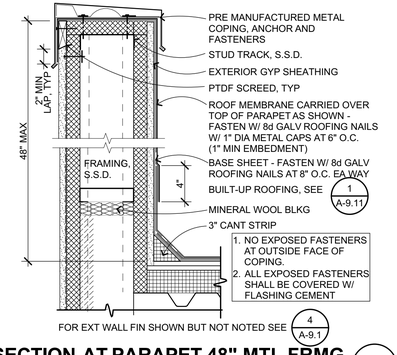

SECTION AT PARAPET 48" MTL FRMG

1 1/2"= 1'-0" B301204 **4**

QUATTROCCHI KWOK ARCHITECTS

Main Office:
636 Fifth Street, Santa Rosa, CA 95404
Pleasanton Office:
600 Main Street, Suite E,
Pleasanton, CA 94566
(707) 576-0829

LICENSED ARCHITECT
JIM THEISS
LICENSE # C22643
EXP JUNE 30, 2021
STATE OF CALIFORNIA

SIGNED: AUGUST 13, 2019

FREEDOM HIGH SCHOOL

PERFORMING ARTS AND CTE FACILITIES

1050 NEROLY RD,
OAKLEY, CA 94561

LIBERTY UNION HIGH SCHOOL DISTRICT

ARCH PROJECT NO:	1739.00
DRAWN BY:	
DRAWING SCALE:	AS NOTED
PTN:	61721-0068

BID SET

AUGUST 13, 2019

SHEET TITLE

MODIFIED BITUMEN ROOFING - METAL FRAMING

SHEET NUMBER

A-9.11

BIM Server: BIMCLOUD-QKA - BIMcloud/1739.00 - Freedom High School/1739.00 FREEDOM HS Performing Arts Center;8/6/2019;4:03 PM

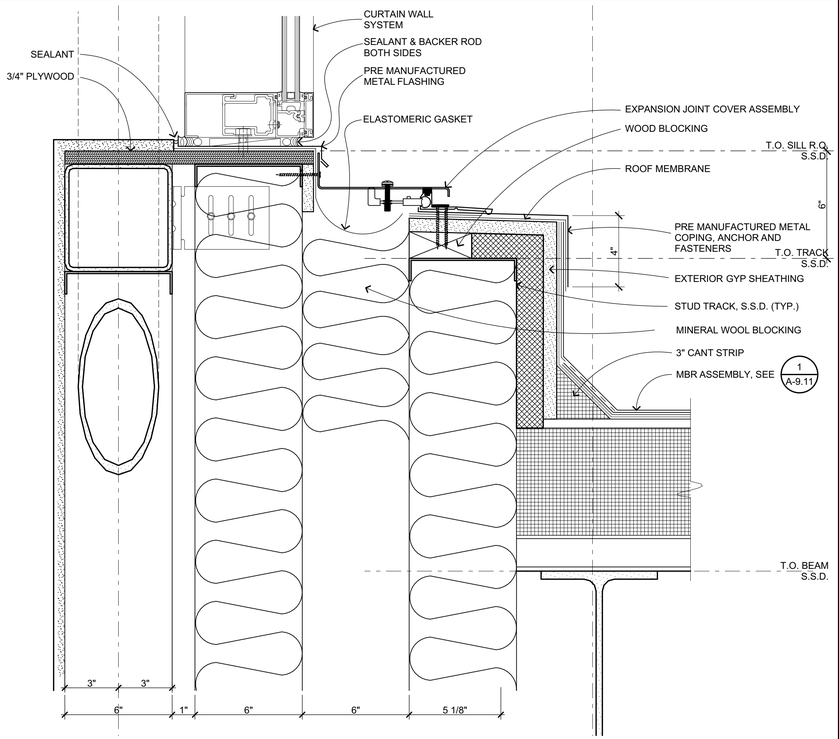

SEISMIC JOINT AT LOBBY/CHORAL BLOCK ROOF

3" = 1'-0" — 14

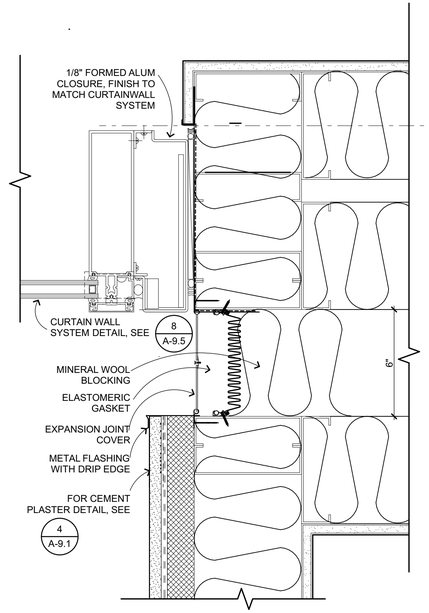

SEISMIC JOINT AT WEST EXTERIOR WALL

3" = 1'-0" — 10

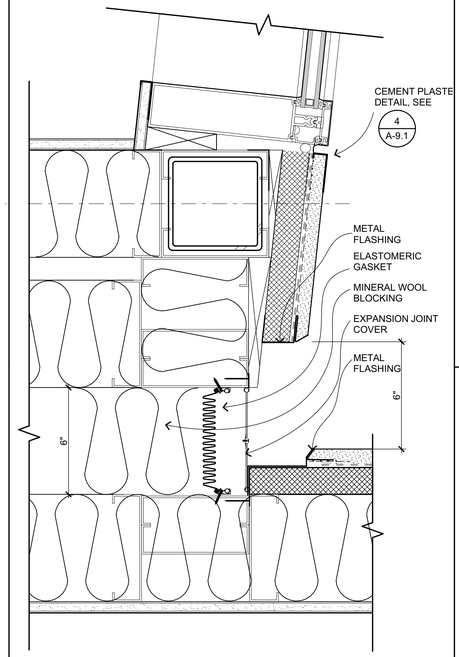

SEISMIC JOINT AT EAST EXTERIOR WALL

3" = 1'-0" — 6

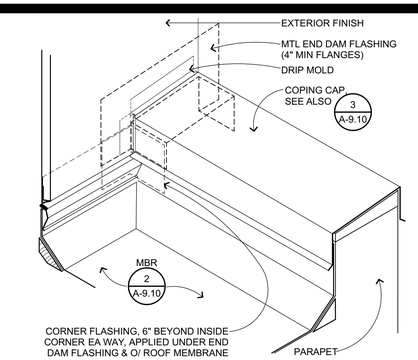

COPING FLASH-INTERSECTION

1 1/2"= 1'-0" — B301207 — 1

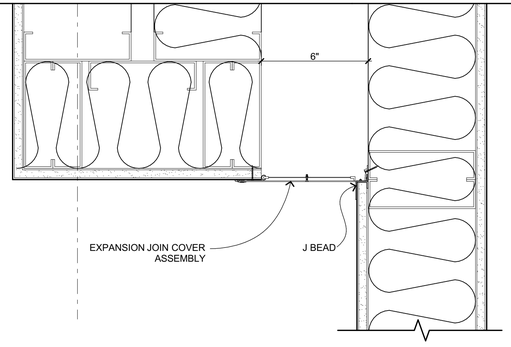

SEISMIC JOINT AT CEILING CORNER

3" = 1'-0" — 101B — 15

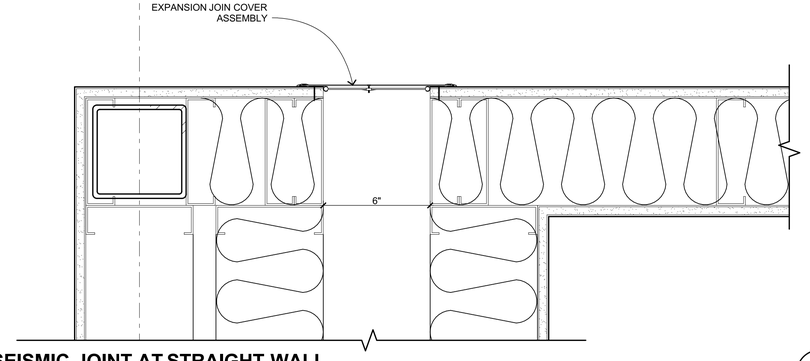

SEISMIC JOINT AT STRAIGHT WALL

3" = 1'-0" — 101C — 16

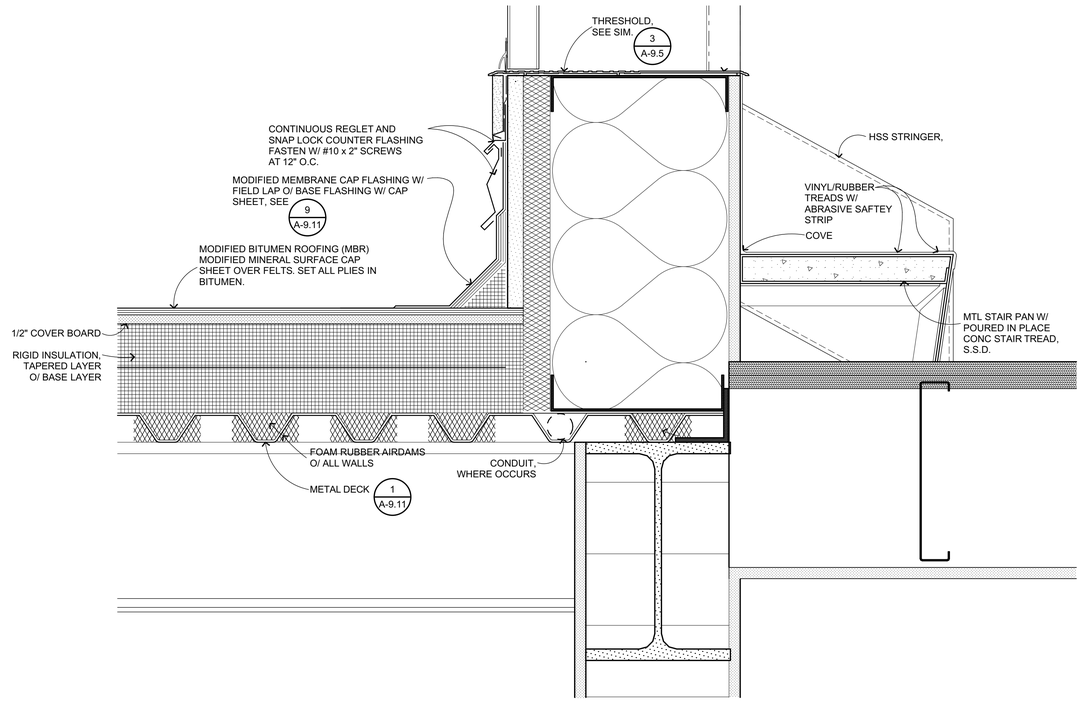

STAIR CURB DETAIL

3" = 1'-0" — 4

QUATTROCCHI KWOK ARCHITECTS
Main Office:
636 Fifth Street, Santa Rosa, CA 95404
Pleasanton Office:
600 Main Street, Suite E,
Pleasanton, CA 94566
(707) 576-0829

LICENSED ARCHITECT
JIM THEISS
LICENSE # C22643
EXP JUNE 30, 2021
STATE OF CALIFORNIA

SIGNED: AUGUST 13, 2019

FREEDOM HIGH SCHOOL

PERFORMING ARTS AND CTE FACILITIES

1050 NEROLY RD,
OAKLEY, CA 94561

LIBERTY UNION HIGH SCHOOL DISTRICT

ARCH PROJECT NO:	1739.00
DRAWN BY:	
DRAWING SCALE:	AS NOTED
PTN:	61721-0068

BID SET

AUGUST 13, 2019

SHEET TITLE

MODIFIED BITUMEN ROOFING - METAL FRAMING

SHEET NUMBER

A-9.12

BIM Server: BIMCLOUD-QKA - BIMcloud/1739.00 - Freedom High School/1739.00 FREEDOM HS Performing Arts Center.8/28/19 4:40 PM

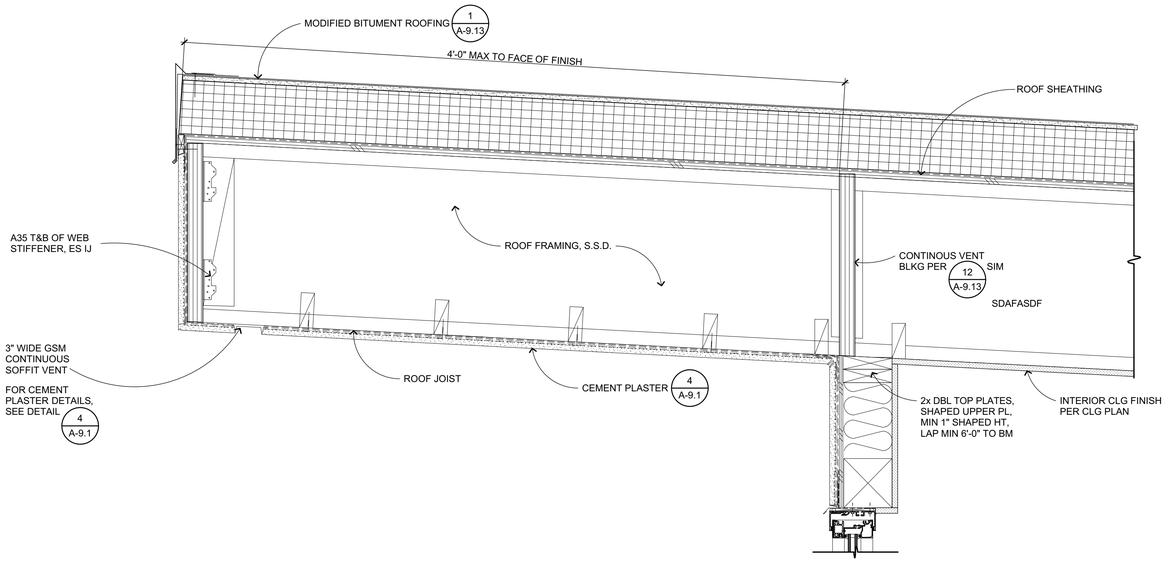

SOFFITED HEAD

1 1/2"= 1'-0" — 10

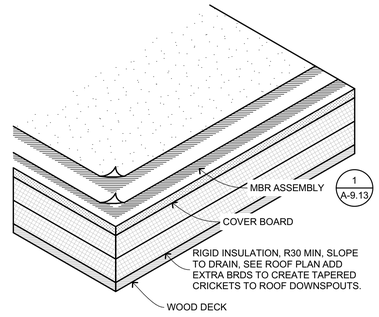

COATED SURFACE AT WOOD DECK

3" = 1'-0" — 1735-20 — 5

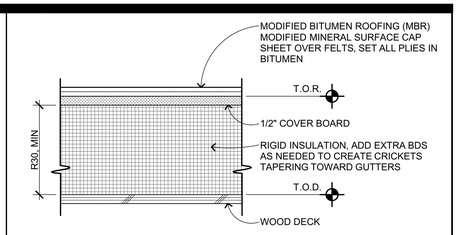

TYPICAL NOTES:

1. MODIFIED BITUMEN ROOFING (MBR) MODIFIED MINERAL SURFACE CAP SHEET OVER BASE PLY, SET ALL PLIES IN BITUMEN.
2. TOP OF ROOF ASSEMBLY (T.O.R.) DIMENSION POINT IS TOP OF COVER BOARD.
3. TOP OF ROOF DECK (T.O.D.) DIMENSION POINT IS TOP OF WOOD SHEATHING.

MBR ASSEMBLY AT WOOD DECK

3" = 1'-0" — B301201 — 1

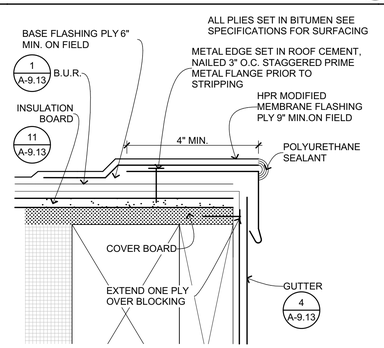

RAKE FLASHING

6" = 1'-0" — 1735-30 — 6

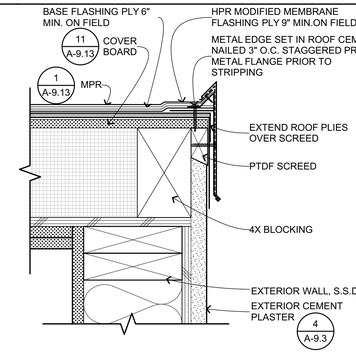

MBR RAKE

3" = 1'-0" — 1735-26 — 2

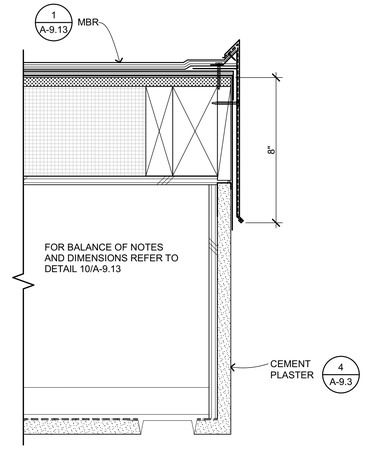

MBR AT SOFFITED RAKE

3" = 1'-0" — 1735-27 — 20

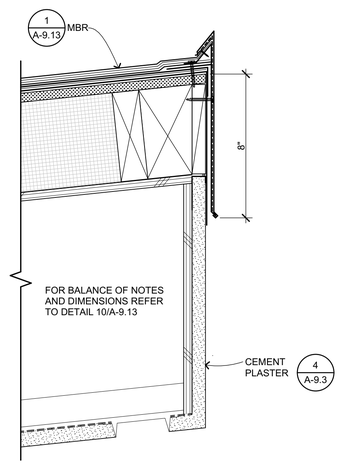

MBR AT SOFFITED HEAD

3" = 1'-0" — 1735-28 — 16

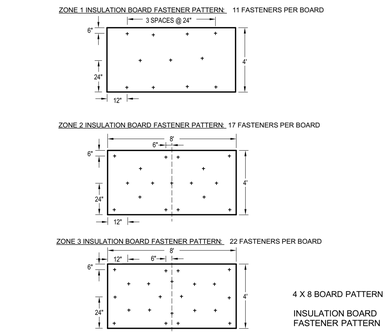

INSULATION BD PATTERN

1/8" = 1'-0" — 61-1483.02-1451 — 11

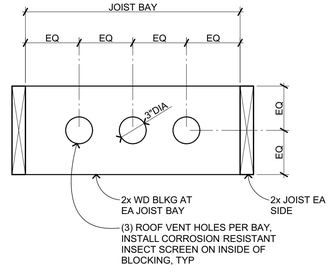

ROOF VENT BLOCKING

1 1/2"= 1'-0" — B201601 — 12

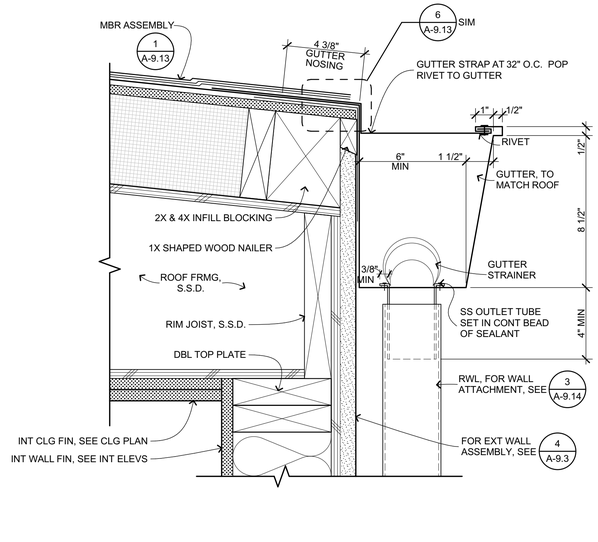

MBR AT EAVE

3" = 1'-0" — 1735-29 — 4

QUATTROCCHI KWOK ARCHITECTS
Main Office:
636 Fifth Street, Santa Rosa, CA 95404
Pleasanton Office:
600 Main Street, Suite E,
Pleasanton, CA 94566
(707) 576-0829

LICENSED ARCHITECT
JIM THEISS
LICENSE # C22643
EXP JUNE 30, 2021
STATE OF CALIFORNIA

SIGNED: AUGUST 13, 2019

FREEDOM HIGH SCHOOL

PERFORMING ARTS AND CTE FACILITIES

1050 NEROLY RD,
OAKLEY, CA 94561

LIBERTY UNION HIGH SCHOOL DISTRICT

ARCH PROJECT NO: 1739.00
DRAWN BY:
DRAWING SCALE: AS NOTED
PTN: 61721-0068

BID SET

AUGUST 13, 2019

SHEET TITLE

MODIFIED BITUMEN ROOFING - WOOD FRAMING

SHEET NUMBER

A-9.13

BIM Server: BIMCLOUD-QKA - BIMcloud/1739.00 - Freedom High School/1739.00 FREEDOM HS Performing Arts Center;8/6/2019 4:04 PM

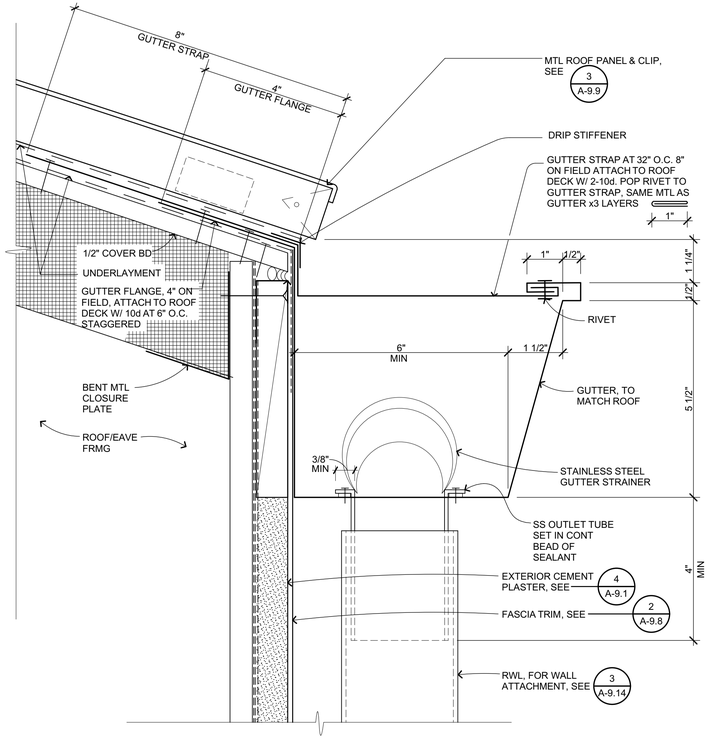

GUTTER - METAL ROOFING/FRAMING

6" = 1'-0" B304101 **2**

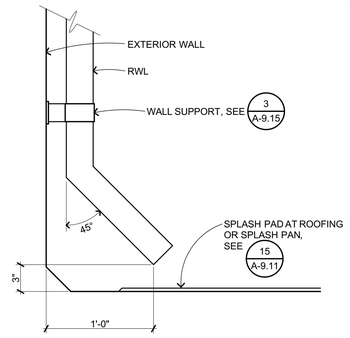

RWL DISCHARGE AT ROOF

1 1/2"= 1'-0" B304213 **15**

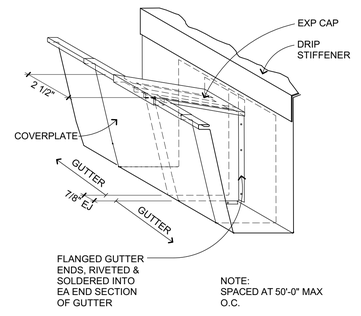

GUTTER EXPANSION JOINT

3" = 1'-0" B304103 **7**

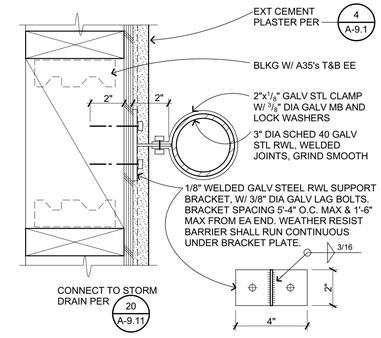

RWL SUPT AT CEM PLAS-WD FRMG

3" = 1'-0" B304201 **3**

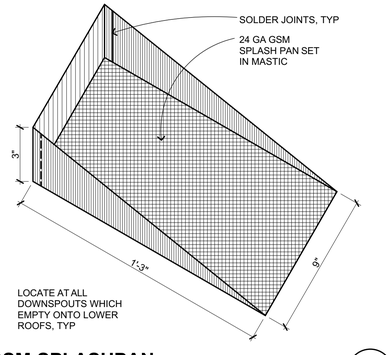

GSM SPLASHPAN

3" = 1'-0" B304210 **16**

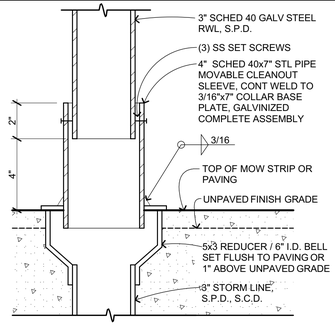

RWL TO STORM DRAIN SLEEVE

3" = 1'-0" B304209 **12**

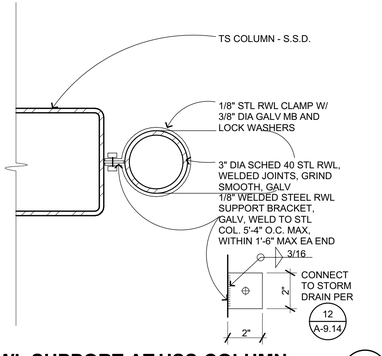

RWL SUPPORT AT HSS COLUMN

3" = 1'-0" B304205 **8**

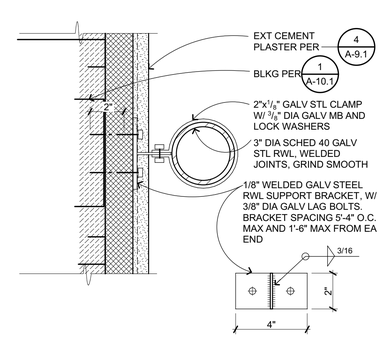

RWL SUPT AT EXT INS

3" = 1'-0" B304202.2 **4**

QUATTROCCHI KWOK ARCHITECTS
Main Office:
636 Fifth Street, Santa Rosa, CA 95404
Pleasanton Office:
600 Main Street, Suite E,
Pleasanton, CA 94566
(707) 576-0829

LICENSED ARCHITECT
JIM THEISS
LICENSE # C22643
EXP JUNE 30, 2021
STATE OF CALIFORNIA

SIGNED: AUGUST 13, 2019

FREEDOM HIGH SCHOOL

PERFORMING ARTS AND CTE FACILITIES

1050 NEROLY RD,
OAKLEY, CA 94561

LIBERTY UNION HIGH SCHOOL DISTRICT

ARCH PROJECT NO:	1739.00
DRAWN BY:	
DRAWING SCALE:	AS NOTED
PTN:	61721-0068

BID SET

AUGUST 13, 2019

SHEET TITLE

GUTTER AND RWL DETAILS

SHEET NUMBER

A-9.14

BIM Server: BIMCLOUD-QKA - BIMcloud/1739.00 - Freedom High School/1739.00 FREEDOM HS Performing Arts Center;8/6/2019;4:05 PM

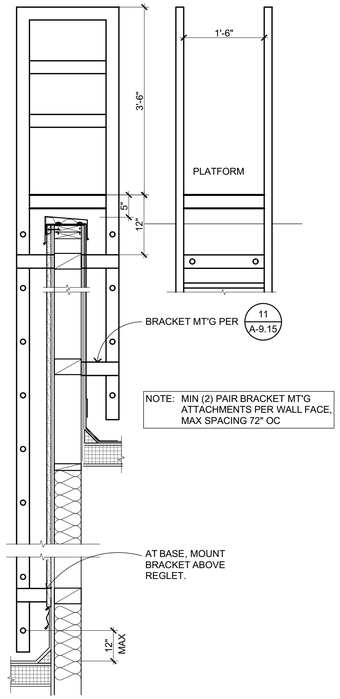

PARAPET LADDER

3/4" = 1'-0" C103405 **18**

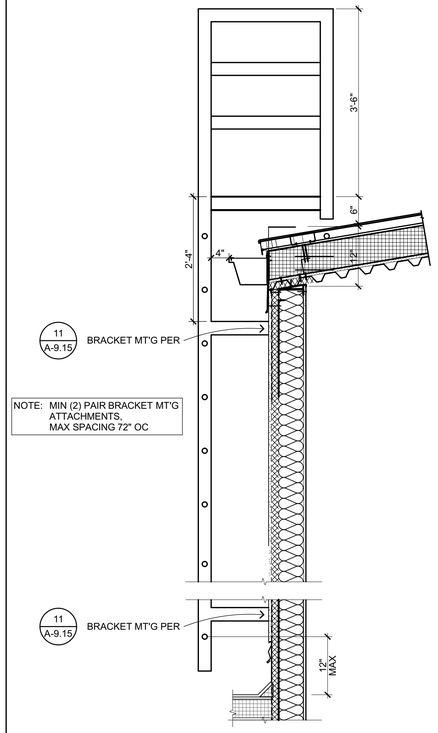

HOUSE ROOF LADDER

3/4" = 1'-0" **14**

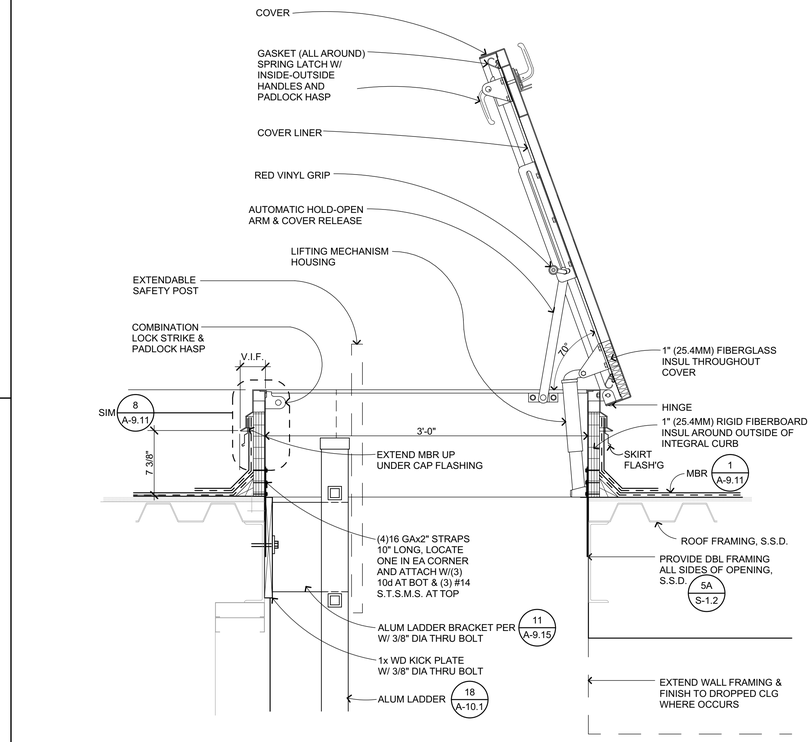

ROOF ACCESS HATCH

1 1/2"= 1'-0" B302301 **2**

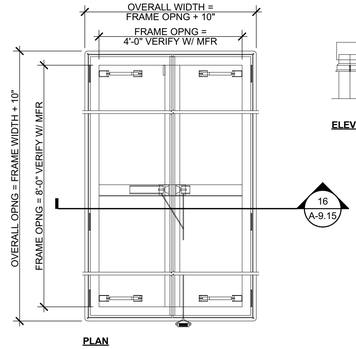

ACOUSTIC SMOKE VENT

1/2" = 1'-0" RD-1019.12 **15**

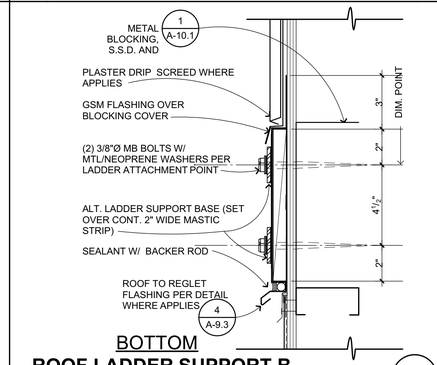

ROOF LADDER SUPPORT B

3" = 1'-0" RD-1019.18 **11**

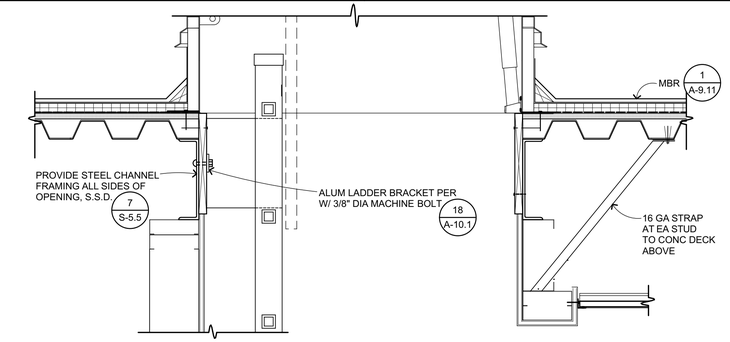

ROOF ACCESS AT MTL DECK

1 1/2"= 1'-0" B302302 **3**

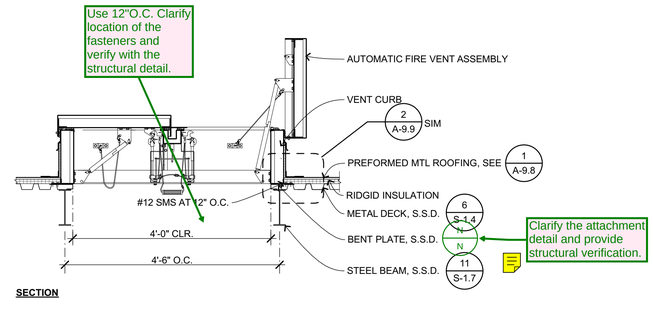

ACOUSTIC SMOKE VENT SECTION

1/2" = 1'-0" RD-1019.13 **16**

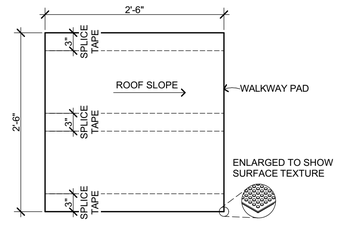

NOTES:
1. REFER TO ROOF PLAN FOR WALK PAD LAYOUT
2. DO NOT INSTALL ON FIELD OR FLASHING SEAMS
3. LEAVE 2" BETWEEN WALKWAY PADS

WALK PADS

1" = 1'-0" RD-1019.07 **8**

QUATTROCCHI KWOK ARCHITECTS
Main Office:
636 Fifth Street, Santa Rosa, CA 95404
Pleasanton Office:
600 Main Street, Suite E,
Pleasanton, CA 94566
(707) 576-0829

LICENSED ARCHITECT
JIM THEISS
LICENSE # C22643
EXP JUNE 30, 2021
STATE OF CALIFORNIA

SIGNED: AUGUST 13, 2019

FREEDOM HIGH SCHOOL

PERFORMING ARTS AND CTE FACILITIES

1050 NEROLY RD,
OAKLEY, CA 94561

LIBERTY UNION HIGH SCHOOL DISTRICT

ARCH PROJECT NO:	1739.00
DRAWN BY:	
DRAWING SCALE:	AS NOTED
PTN:	61721-0068

BID SET

AUGUST 13, 2019

SHEET TITLE

ROOF HATCHES AND ACCESS LADDERS

SHEET NUMBER

A-9.15

BIM Server: BIMCLOUD-QKA - BIMcloud/1739.00 - Freedom High School/1739.00 FREEDOM HS Performing Arts Center-8/26/2019,2:47 PM

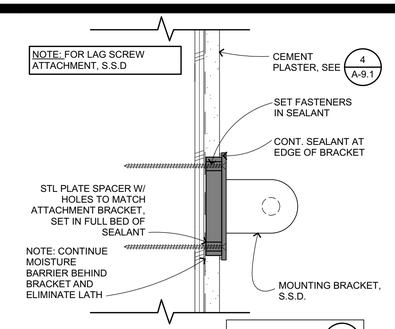

UPPER WALL BRACKET

3" = 1'-0" B205001 **9**

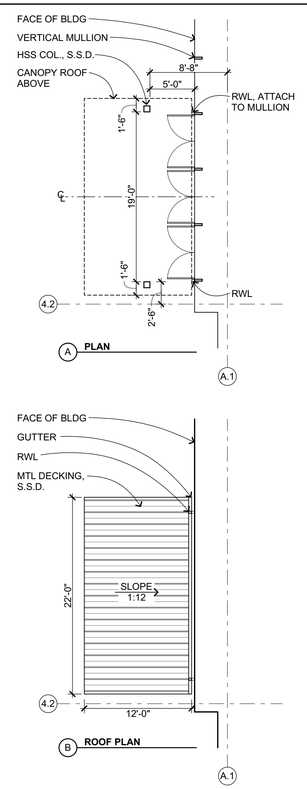

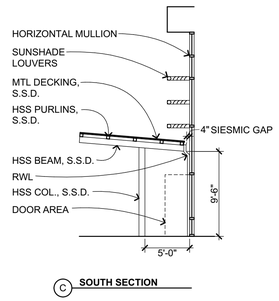

ENTRY CANOPY

1/8" = 1'-0" **16**

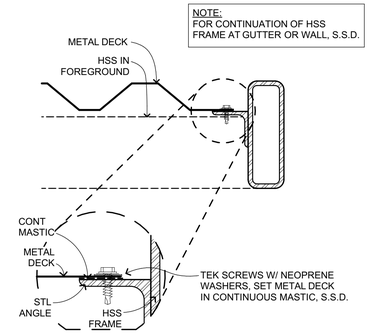

RAIN CANOPY RAKE

3" = 1'-0" B205113 **10**

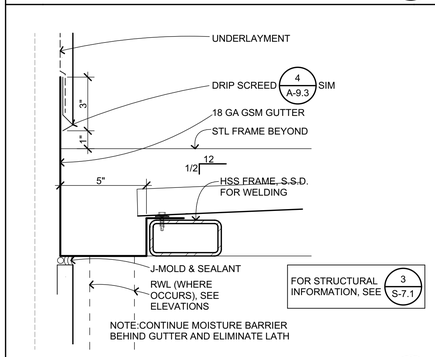

RAIN CANOPY GUTTER

3" = 1'-0" B205115 **11**

NOTE: 1. S.S.D. FOR ASSEMBLY, METAL DECK TYPE & FASTENERS
2. FASTEN RAIN CANOPY INTO STRUCTURAL WD POSTS ONLY, SOLID BLOCKING NOT ACCEPTABLE
3. ALL MATERIALS TO BE PAINTED GALV STEEL, U.O.N.

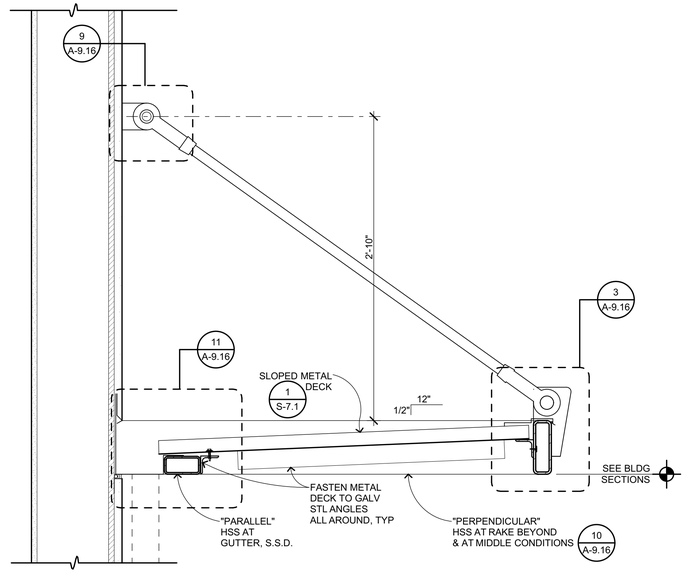

TYP RAIN CANOPY

1 1/2"= 1'-0" B205110 **2**

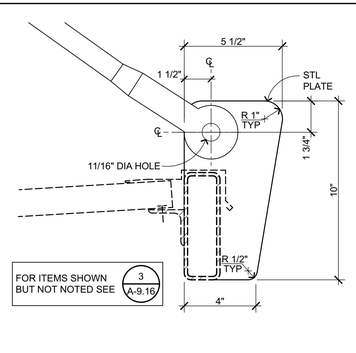

ATTACHMENT BRACKET

3" = 1'-0" B205108B **7**

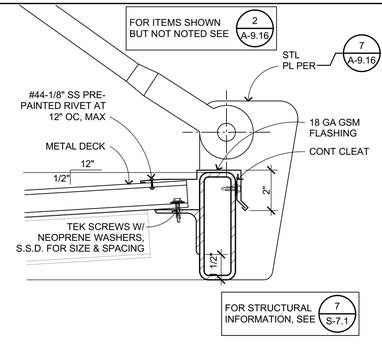

RAIN CANOPY HEAD

3" = 1'-0" B205112 **3**

QUATTROCCHI KWOK ARCHITECTS
Main Office:
636 Fifth Street, Santa Rosa, CA 95404
Pleasanton Office:
600 Main Street, Suite E,
Pleasanton, CA 94566
(707) 576-0829

LICENSED ARCHITECT
JIM THEISS
LICENSE # C22643
EXP JUNE 30, 2021
STATE OF CALIFORNIA

SIGNED: AUGUST 13, 2019

FREEDOM HIGH SCHOOL

PERFORMING ARTS AND CTE FACILITIES

1050 NEROLY RD,
OAKLEY, CA 94561

LIBERTY UNION HIGH SCHOOL DISTRICT

ARCH PROJECT NO:	1739.00
DRAWN BY:	
DRAWING SCALE:	AS NOTED
PTN:	61721-0068

BID SET

AUGUST 13, 2019

SHEET TITLE

RAIN CANOPY & ENTRY CANOPY DETAILS

SHEET NUMBER

A-9.16

BIM Server: BIMCLOUD-QKA - BIMcloud/1739.00 - Freedom High School/1739.00 FREEDOM HS Performing Arts Center;8/6/2019 4:06 PM

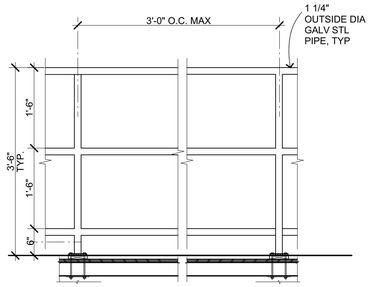

GUARDRAIL/LIGHTING GURADRAIL 9

3/4" = 1'-0"

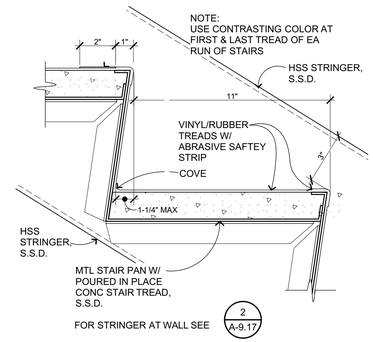

INT CONC MTL STAIR 1

3" = 1'-0" C201102

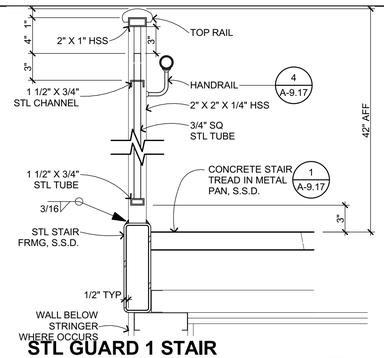

STL GUARD 1 STAIR SECTION 14

1 1/2"= 1'-0" B403113

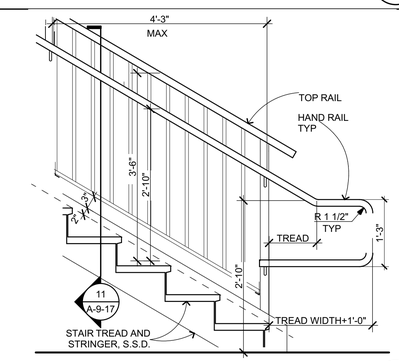

STL GUARDRAIL 1 AT STAIR 10

3/4" = 1'-0" B403112

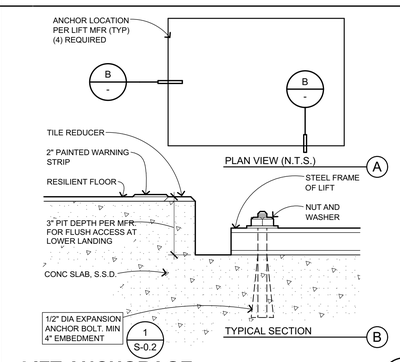

LIFT ANCHORAGE 6

3" = 1'-0" D102101

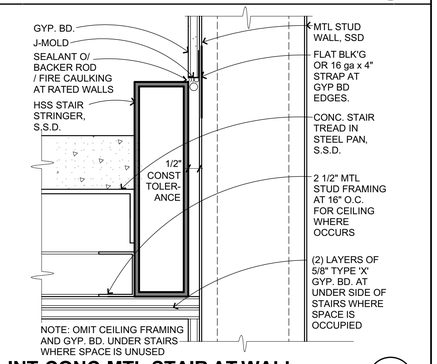

INT CONC MTL STAIR AT WALL 2

3" = 1'-0" C201103

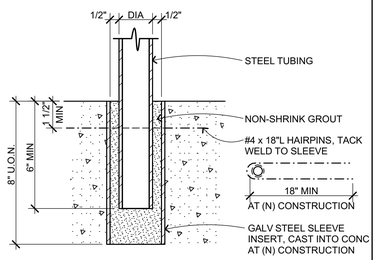

PIPE SLEEVE 19

3" = 1'-0" G203206

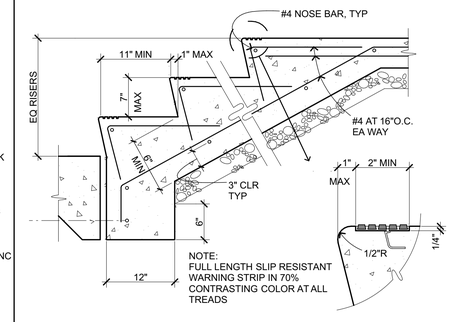

CONCRETE STAIR SECTION 15

1" = 1'-0"

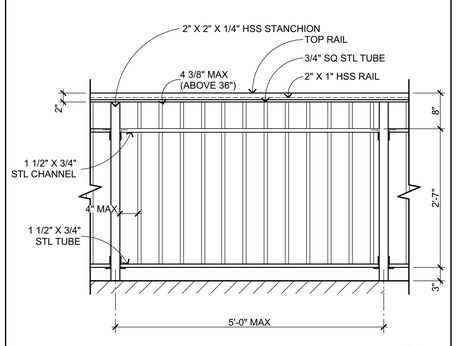

WALL PANEL PERSPECTIVE 11

3/4" = 1'-0" B403115

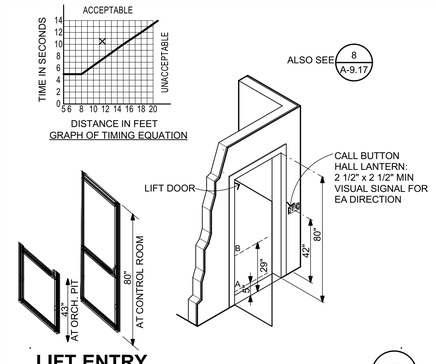

LIFT ENTRY 7

1/4" = 1'-0" D101101

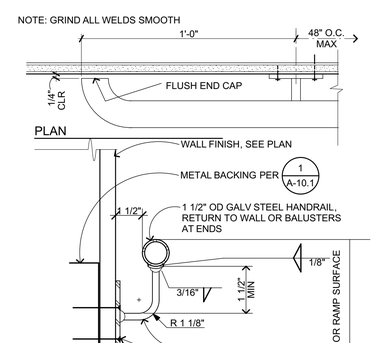

WALL MT RAILING 4

3" = 1'-0" C203104

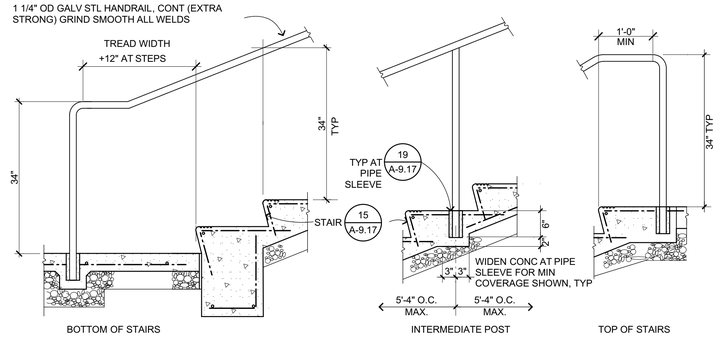

WALL PANEL PERSPECTIVE 16

3/4" = 1'-0" G203202

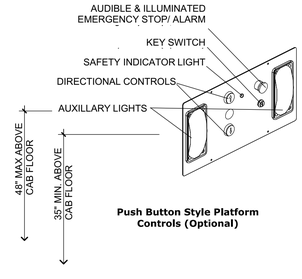

Push Button Control Package
The Push Button Control Package includes illuminated constant pressure directional control switches and platform courtesy lighting. The illuminated push button directional controls also feature tactile directional arrows and braille symbols. Platform courtesy lighting remains illuminated for the duration of platform travel and for 10 seconds after the platform arrives at the landing.

LIFT CONTROL PANEL 8

N. T. S. D101102

QUATTROCCHI KWOK ARCHITECTS
Main Office:
636 Fifth Street, Santa Rosa, CA 95404
Pleasanton Office:
600 Main Street, Suite E,
Pleasanton, CA 94566
(707) 576-0829

LICENSED ARCHITECT
JIM THEISS
LICENSE # C22643
EXP JUNE 30, 2021
STATE OF CALIFORNIA

SIGNED: AUGUST 13, 2019

FREEDOM HIGH SCHOOL

PERFORMING ARTS AND CTE FACILITIES

1050 NEROLY RD,
OAKLEY, CA 94561

LIBERTY UNION HIGH SCHOOL DISTRICT

ARCH PROJECT NO:	1739.00
DRAWN BY:	
DRAWING SCALE:	AS NOTED
PTN:	61721-0068

BID SET

AUGUST 13, 2019

SHEET TITLE

STAIR & ACC LIFT DETAILS

SHEET NUMBER

A-9.17

BIM Server: BIMCLOUD-QKA - BIMcloud/1739.00 - Freedom High School/1739.00 FREEDOM HS Performing Arts Center.8/6/2019 4:07 PM

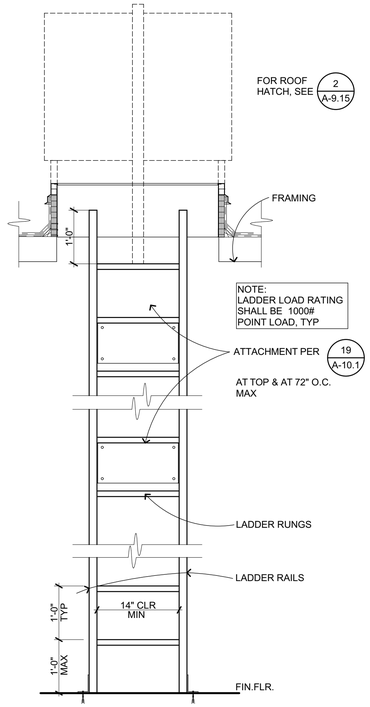

INT ALUM LADDER

3/4" = 1'-0" C103401 **18**

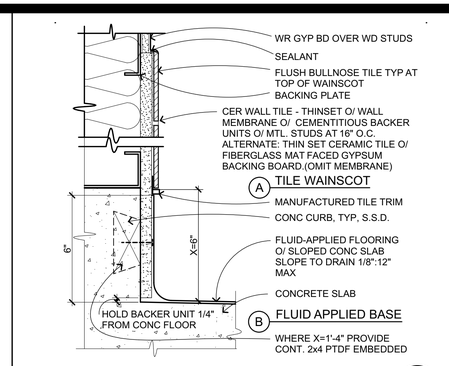

CERAMIC TILE - EPOXY FLOORING

3" = 1'-0" **13**

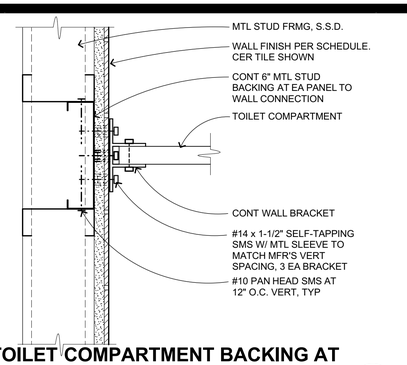

TOILET COMPARTMENT BACKING AT MTL STUD

3" = 1'-0" C103104_B **9**

NOTES:
1. GRAB BARS SHALL NOT ROTATE
2. GRAB BARS, FLANGES & ANY EXPOSED SURFACE SHALL NOT HAVE ANY SHARP OR ABRASIVE ELEMENTS
3. CBC 11B-609.8 GRAB BARS & MOUNTINGS SHALL W/STAND 250 LBS HORIZONTAL OR VERTICAL LOADING.

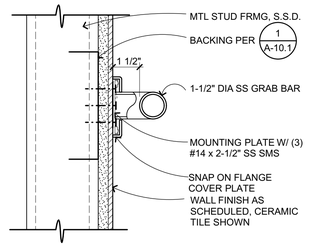

GRAB BAR ATTACH - MTL STUDS

3" = 1'-0" C103101_B **5**

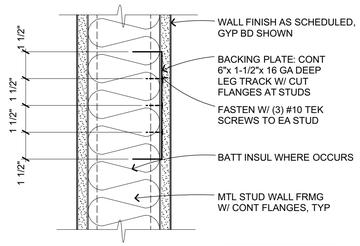

BACKING PLATE AT MTL STUDS

3" = 1'-0" C108101_B **1**

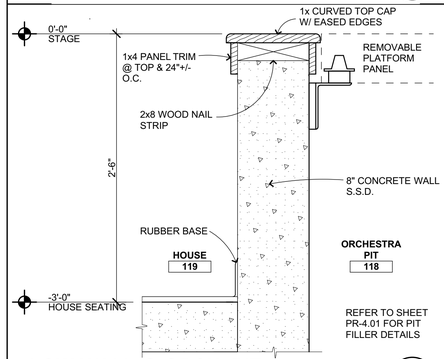

LOW WALL @ ORCH. PIT

1 1/2"= 1'-0" **14**

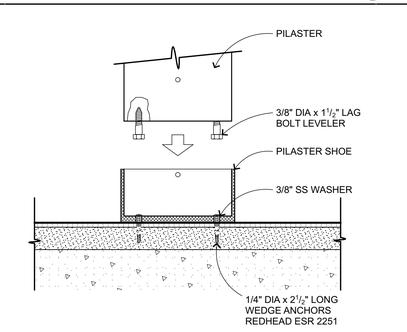

TOILET COMPARTMENT ATTACH AT FLOOR

3" = 1'-0" C103105 **10**

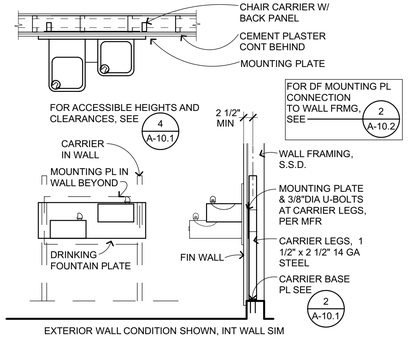

DF MOUNTING AT METAL STUDS

1/2" = 1'-0" D208106 **6**

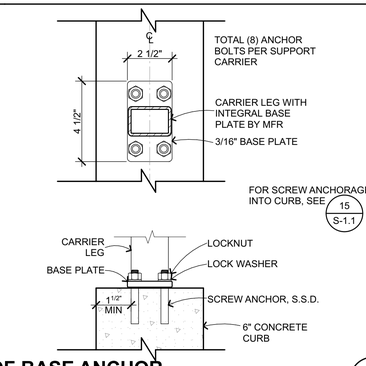

DF BASE ANCHOR

3" = 1'-0" D208109 **2**

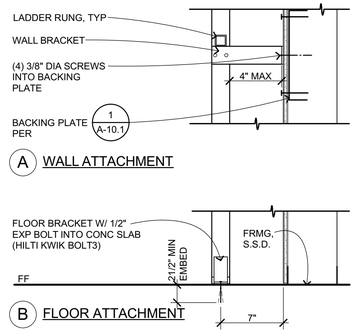

LADDER ATTACH AT METAL STUDS

1 1/2"= 1'-0" C103402 **19**

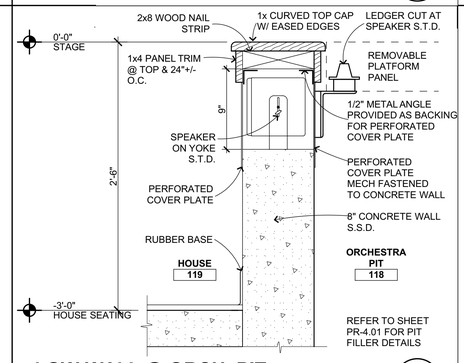

LOW WALL @ ORCH. PIT

1 1/2"= 1'-0" **15**

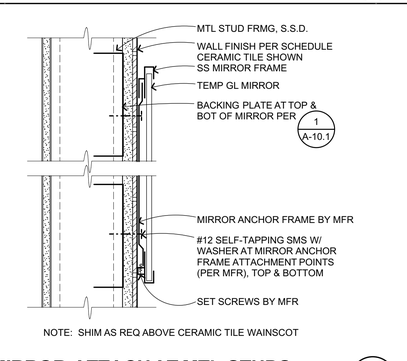

MIRROR ATTACH AT MTL STUDS

3" = 1'-0" C103103_B **11**

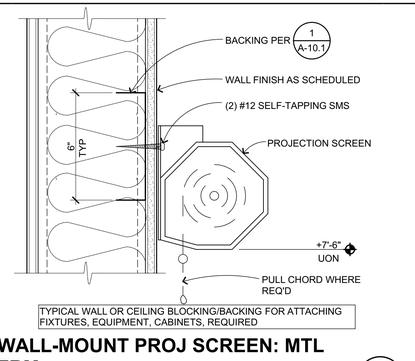

WALL-MOUNT PROJ SCREEN: MTL FRM

3" = 1'-0" E102304_B **7**

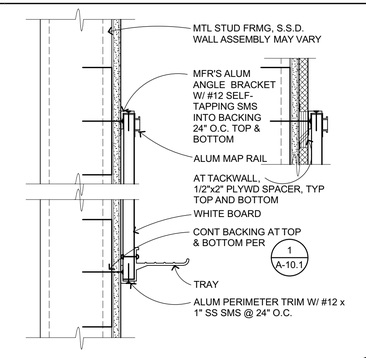

MARKER BD AT METAL STUDS

3" = 1'-0" C103201_B **3**

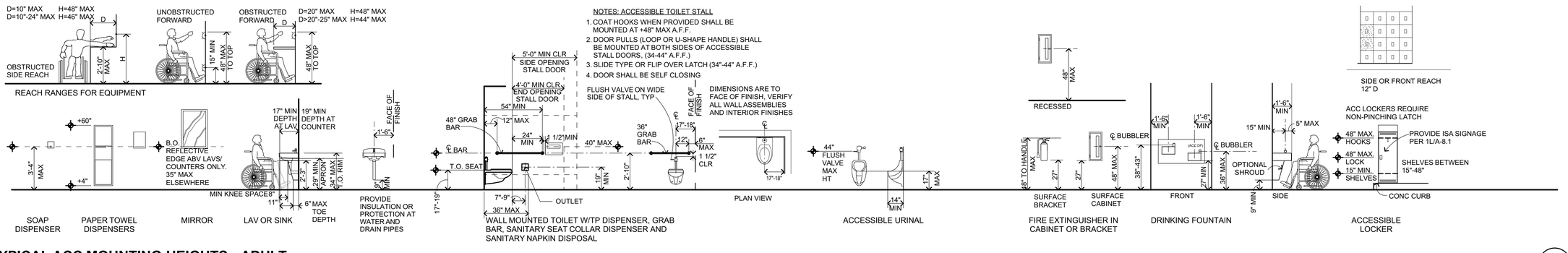

TYPICAL ACC MOUNTING HEIGHTS - ADULT

1/4" = 1'-0" C401101-2016 **4**

QUATTROCCHI KWOK ARCHITECTS
Main Office:
636 Fifth Street, Santa Rosa, CA 95404
Pleasanton Office:
600 Main Street, Suite E,
Pleasanton, CA 94566
(707) 576-0829

LICENSED ARCHITECT
JIM THEISS
LICENSE # C22643
EXP JUNE 30, 2021
STATE OF CALIFORNIA

SIGNED: AUGUST 13, 2019

FREEDOM HIGH SCHOOL

PERFORMING ARTS AND CTE FACILITIES

1050 NEROLY RD,
OAKLEY, CA 94561

LIBERTY UNION HIGH SCHOOL DISTRICT

ARCH PROJECT NO:	1739.00
DRAWN BY:	
DRAWING SCALE:	AS NOTED
PTN:	61721-0068

BID SET

AUGUST 13, 2019

SHEET TITLE

INTERIOR DETAILS - METAL FRAMING

SHEET NUMBER

A-10.1

BIM Server: BIMCLOUD-QKA - BIMcloud/1739.00 - Freedom High School/1739.00 FREEDOM HS Performing Arts Center.8/6/2019.3:13 PM

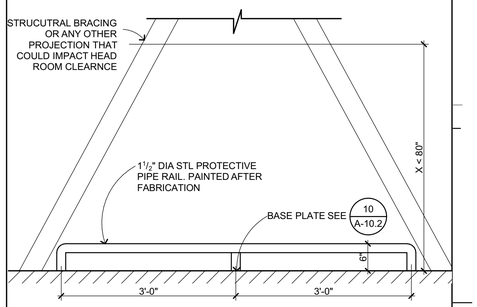

PROTECTIVE PIPE RAIL

3/4" = 1'-0" XXX **9**

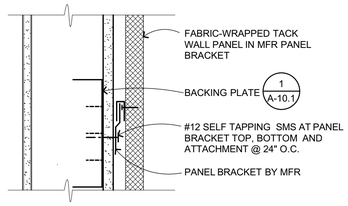

TACK WALL PANEL ATTACHMENT

3" = 1'-0" C10324 **5**

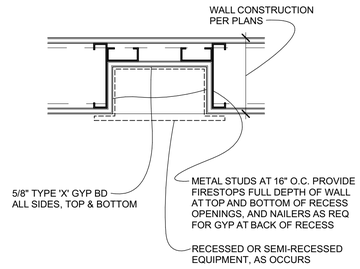

RECESS AT RATED WALL - MTL FRMG

1 1/2"= 1'-0" C104101 **1**

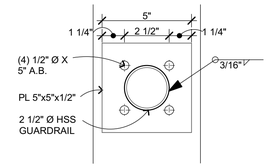

PROTECTIVE PIPE RAIL BASE PLATE

3" = 1'-0" G203213 **10**

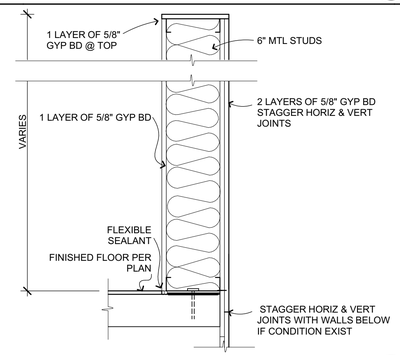

TYPICAL LOW WALL

1 1/2"= 1'-0" **6**

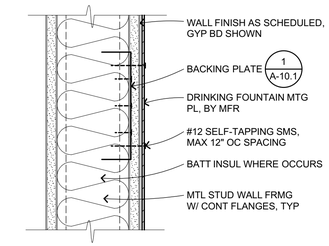

NOTE: BACKING PLATE SHALL BE CONTINUOUS ACROSS (3) STUDS (MIN), PROVIDE BRIDGING, SEE 1 S-1.6 5 S-1.6

DF MTG PL WALL ATTACHMENT

3" = 1'-0" C108101_B-1739.00 **2**

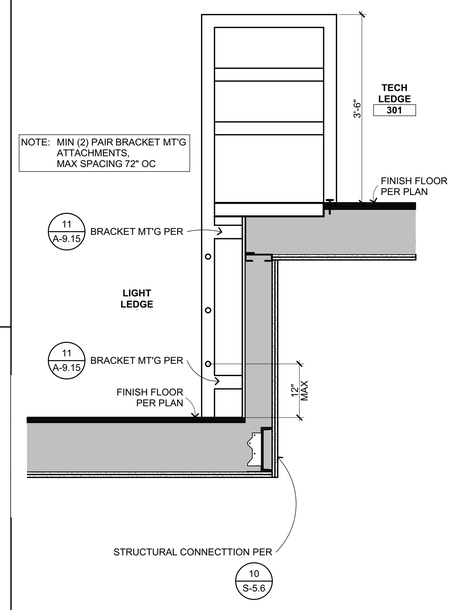

LIGHT LEDGE LADDER

3/4" = 1'-0" **8**

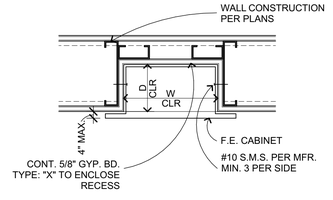

NOTE:
PROVIDE FIRESTOPS FULL DEPTH OF WALL AT TOP AND BOTTOM OF FE CABT OPENINGS

FIRE EXT/ HOSE CABINET

1 1/2"= 1'-0" **4**

QUATTROCCHI KWOK ARCHITECTS
Main Office:
636 Fifth Street, Santa Rosa, CA 95404
Pleasanton Office:
600 Main Street, Suite E,
Pleasanton, CA 94566
(707) 576-0829

LICENSED ARCHITECT
JW THEISS
LICENSE # C22643
EXP JUNE 30, 2021
STATE OF CALIFORNIA

SIGNED: AUGUST 13, 2019

FREEDOM HIGH SCHOOL

PERFORMING ARTS AND CTE FACILITIES

1050 NEROLY RD,
OAKLEY, CA 94561

LIBERTY UNION HIGH SCHOOL DISTRICT

ARCH PROJECT NO:	1739.00
DRAWN BY:	
DRAWING SCALE:	AS NOTED
PTN:	61721-0068

BID SET

AUGUST 13, 2019

SHEET TITLE

INTERIOR DETAILS - METAL FRAMING

SHEET NUMBER

A-10.2

BIM Server: BIMCLOUD-QKA - BIMcloud/1739.00 - Freedom High School/1739.00 FREEDOM HS Performing Arts Center;8/6/2019;3:13 PM

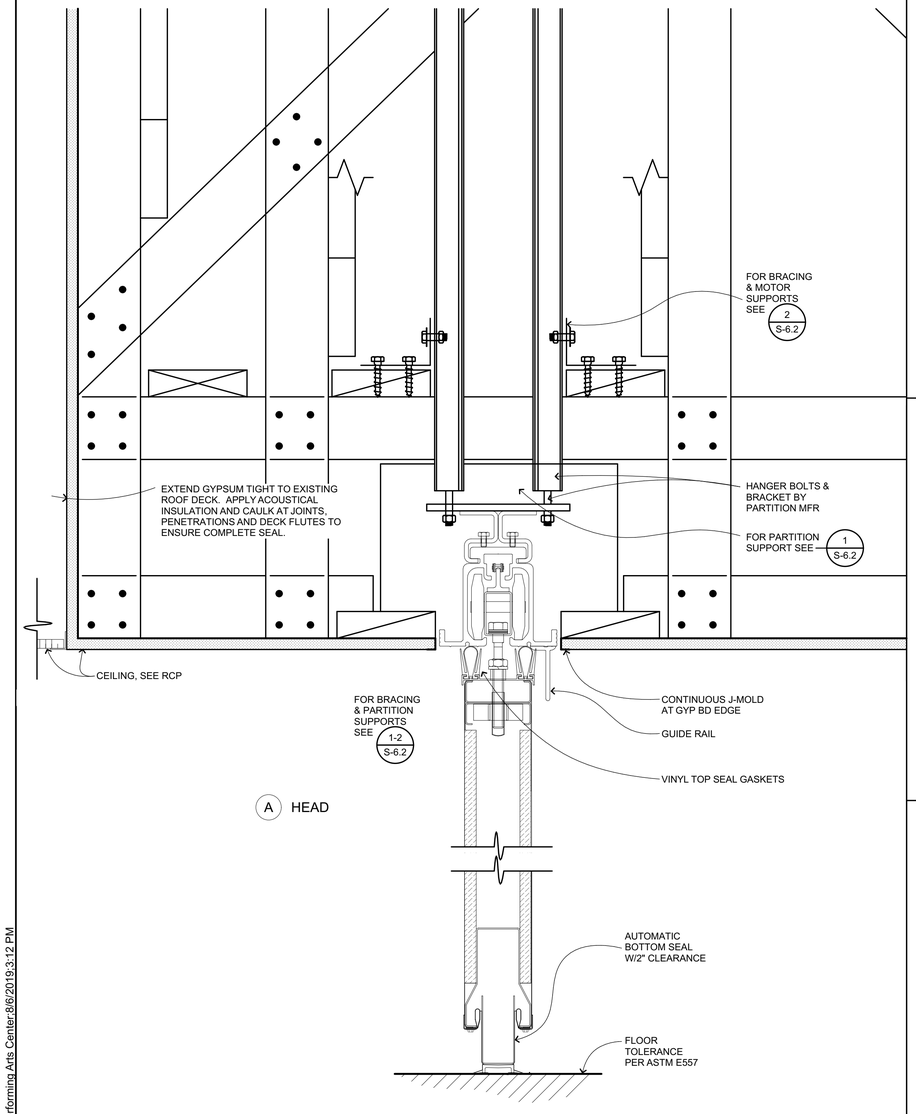

OPERABLE PARTITION DETAIL

3" = 1'-0" 001-1730A **15**

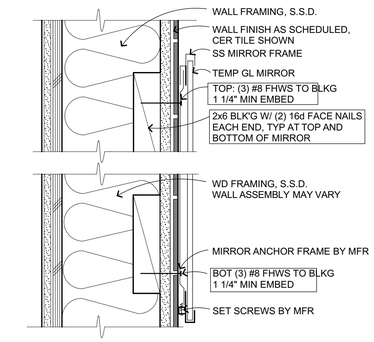

MIRROR ATTACHMENT WD

3" = 1'-0" C103103_A **1**

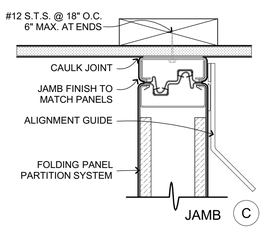

OPERABLE PARTITION DETAIL

3" = 1'-0" 001-1730B **12**

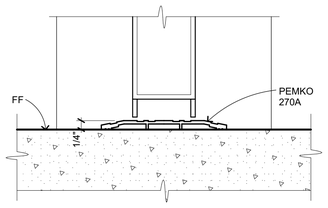

INTERIOR METAL THRESHOLD

6" = 1'-0" C102602 **7**

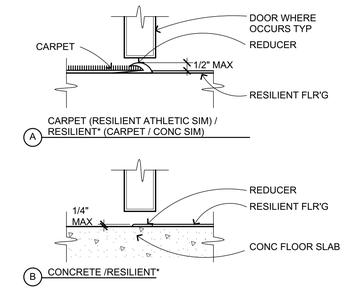

NOTES:
1. RESILIENT FLOORING - TILE OR SHEET MATERIAL AS NOTED OR SPECIFIED ELSEWHERE.
2. WHERE TRANSITION STRIP > 1/4" HT SHALL BE BEVELED 1:2 MAX OR EQUIVALENT THERETO.
3. DOOR AS OCCURS, TYP.

FLOOR TRANSITIONS/SILLS

3" = 1'-0" C102601 **3**

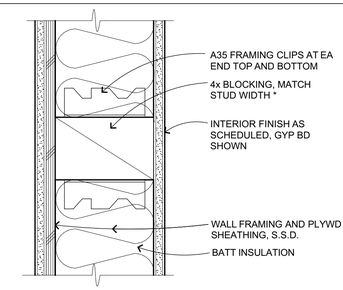

TYPICAL WALL OR CEILING BLOCKING / BACKING FOR ATTACHING FIXTURES, EQUIPMENT, CABINETS, REQUIRED

* WHERE STUD WIDTH > 5 1/2", 4 x 6 AT SIDE OF ATTACHMENT MAY BE USED.

BLK'G/BACKING-WD

3" = 1'-0" C108101_A **8**

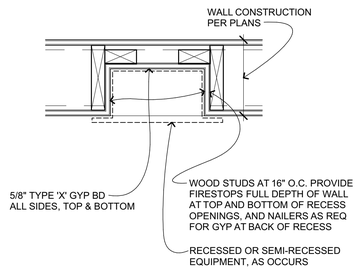

RECESS AT RATED WALL - WD FRMG

1 1/2"= 1'-0" C104102 **4**

QUATTROCCHI KWOK ARCHITECTS
Main Office:
636 Fifth Street, Santa Rosa, CA 95404
Pleasanton Office:
600 Main Street, Suite E,
Pleasanton, CA 94566
(707) 576-0829

LICENSED ARCHITECT
JIM THEISS
LICENSE # C22643
EXP JUNE 30, 2021
STATE OF CALIFORNIA

SIGNED: AUGUST 13, 2019

FREEDOM HIGH SCHOOL

PERFORMING ARTS AND CTE FACILITIES

1050 NEROLY RD,
OAKLEY, CA 94561

LIBERTY UNION HIGH SCHOOL DISTRICT

ARCH PROJECT NO:	1739.00
DRAWN BY:	
DRAWING SCALE:	AS NOTED
PTN:	61721-0068

BID SET

AUGUST 13, 2019

SHEET TITLE

INTERIOR DETAILS - WOOD FRAMING

SHEET NUMBER

A-10.3

BIM Server: BIMCLOUD-QKA - BIMcloud/1739.00 - Freedom High School/1739.00 FREEDOM HS Performing Arts Center8/6/2019 3:12 PM

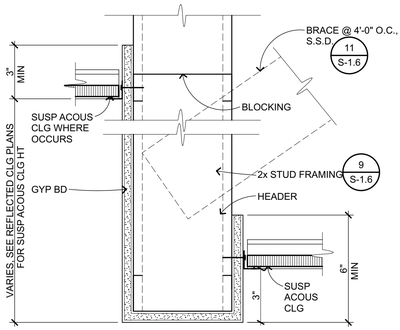

HDR SOFFIT AT SUSP CLG-MTL

3" = 1'-0" C303210_B **17**

EXPOSED STEEL WITHIN THE YELLOW STRIPE BOUNDARY IS STRUCTURAL AND PROTECTED. DO NOT DRILL, SCREW, PENETRATE OR DAMAGE THE SURFACE IN ANY WAY.
DO NOT REMOVE THIS TAG

ADHESIVE STICKER (NO SHOT PINS ALLOWED)

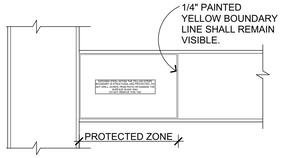

TAG @ MOMENT FRAME

1/4" = 1'-0" C101121 **18**

TYP ALL OPTIONS: APPLICABLE FOR PERIMETER WIRE ATTACHMENT OR WHERE OBSTRUCTIONS(S) PREVENT ATTACHMENT TO STRUCTURE ABOVE

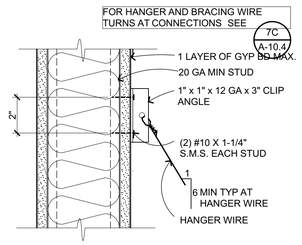

A HANGER WIRE OPTION 1

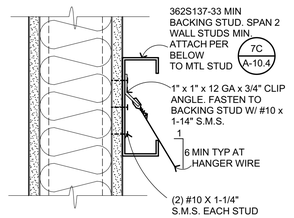

B HANGER WIRE OPTION 2

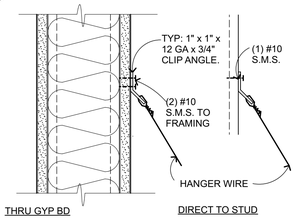

C HANGER WIRE OPTION 3

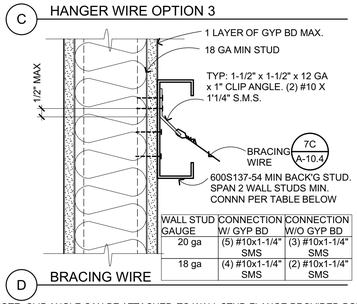

WALL STUD GAUGE	CONNECTION W/ GYP BD	CONNECTION W/O GYP BD
20 ga	(5) #10x1-1/4" SMS	(3) #10x1-1/4" SMS
18 ga	(4) #10x1-1/4" SMS	(2) #10x1-1/4" SMS

D BRACING WIRE

*NOTE: CLIP ANGLE CAN BE ATTACHED TO WALL STUD FLANGE PROVIDED BOTH OF THE FOLLOWING CONDITIONS ARE MET;
- THE WALL STUD IS 18ga MIN AND CAPABLE OF SUPPORTING THE BRACE FORCE.
- THE BRACE WIRE ALIGNS WITH THE WALL STUD WEB.
DSA IR 25-2.13FIGURE 4.24 & 4.34

WIRES TO MTL STUD

3" = 1'-0" C303219 **15**

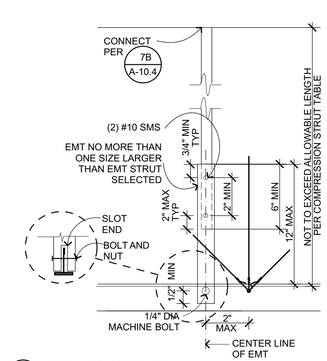

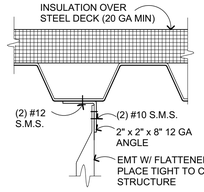

B CHANNEL STRUT CONNECTION TO STEEL DECK
DSA IR 25.2-13 FIGURE 5.20 OPTION 1

FOR COMPRESSION STRUT SIZING SEE 4 A-10.4

FOR ALTERNATE HANGER AND BRACING WIRE CONNECTIONS AT MTL STUD WALLS SEE 15 A-10.4

A COMPRESSION STRUT (EMT)
DSA IR 25.2-13 FIGURE 3.20 OPTION 1

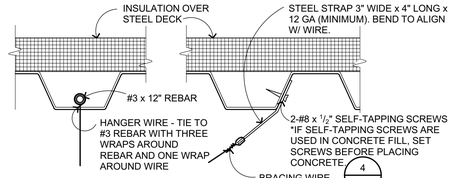

C STEEL DECK W/ INSULATION20 GA MIN DECK
DSA IR 25.2-13 FIGURE 4.20

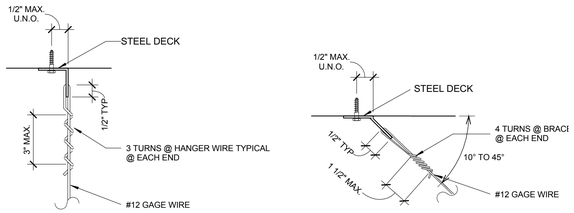

HANGER WIRE BRACING WIRE

D TYPICAL WIRE TURNS
DSA IR 25.2-13 FIGURE 4.10

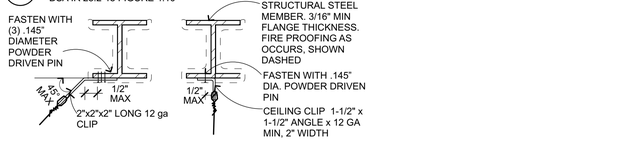

SPLAYED BRACING WIRE DSA IR 25.2-13 FIGURE 4.33

VERTICAL HANGER WIRE DSA IR 25.2-13 FIGURE 4.23

E AT STEEL BEAM
NO PIN IS TO BE INSTALLED IN THE PROTECTED ZONE OF ANY STEEL MEMBER 18 A-10.4

FOR SUSPENDED CEILING CONDITIONS & NOTES SEE ALSO 1 A-10.4, 2 A-10.4, 3 A-10.4, 4 A-10.4

SUSP ACOUS CLG - MTL DECK

3" = 1'-0" C303207 **7**

1. GENERAL REQUIREMENTS: CBC Section 1616 & IR 25-2.13 govern the design and installation of suspended ceiling systems for lay-in ceilings for projects submitted to the DSA.The details are for ceilings whose total weight does not exceed 4 PSF.
SEE DETAILS FOR SPECIFIC REQUIREMENTS

2. Refer to reflected ceiling plans for locations of expansion joints and seismic separation joints as occur.

3. Lateral force bracing may be omitted for suspended acoustical ceiling systems with a ceiling area of 144 square feet or less, and fire rated suspended acoustical ceiling systems with a ceiling area of 96 square feet or less, when perimeter support in accordance with governing regulations are provided and perimeter walls are designed to carry the ceiling lateral forces.

4. For attachment of all light fixtures, flush, recessed or otherwise ceiling mounted, refer to electrical drawings for details.

5. For attachment of ceiling mounted air terminals , grilles, mechanical terminals, and flexible sprinkler hose fittings or other services be supported directly on runner, refer to mechanical drawings for details.

6. Ceiling panels shall not support any light fixture, air terminals or devices.

7. Refer to Project Manual seciton 095100 for Acoustical Ceiling Specifications.

8. Refer to 4 A-10.5 for DSA IR 25-2.13 General Notes Apendix A

TYPICAL WIRE FASTENING:

HANGER WIRES: 12 GA WIRE WITH MINIMUM OF 3 TIGHT TURNS IN 3 INCHES, BOTH END, TYPICAL.

BRACING WIRES: 12 GA WIRE WITH MINIMUM OF 4 TIGHT TURNS IN 1-1/2" EACH END, TYPICAL.

TYP SUSP CEILING NOTES

1/8" = 1'-0" C303209 2013 **1**

12'-0" x 12'-0" Brace Assembly Spacing
DSA IR 25.2-13 FIGURES 2.10 2.11 & 2.12

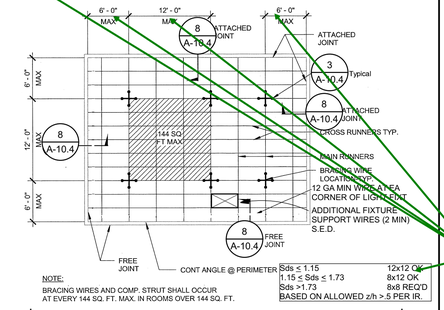

NOTE:
BRACING WIRES AND COMP. STRUT SHALL OCCUR AT EVERY 144 SQ. FT. MAX. IN ROOMS OVER 144 SQ. FT.

Sds ≤ 1.15	12x12 OK
1.15 ≤ Sds ≤ 1.73	8x12 OK
Sds >1.73	8x8 REQ'D

BASED ON ALLOWED z/h > 5 PER IR

SUSP CLG SUPPORT PLAN

1/8" = 1'-0" **2**

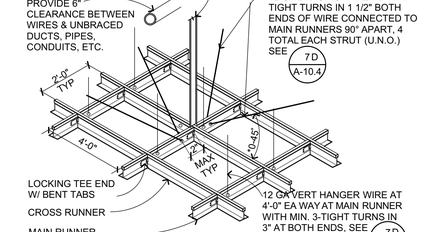

DSA IR 25.2-13 FIGURE 2.35

CROSS-TEE INTERSECTION

1 1/2"= 1'-0" C303201 **3**

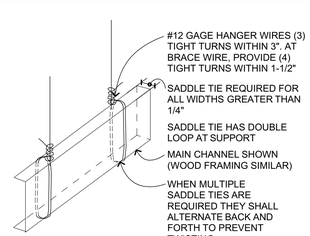

DSA IR 25-2.13 FIGURE 4.29

SADDLE TIE DETAIL

3" = 1'-0" C303203 **20**

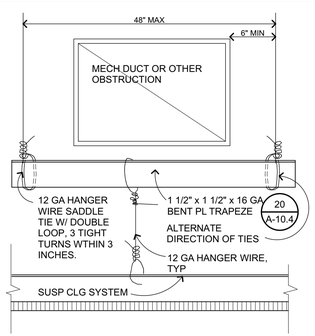

SUSP ACOUS CLG TRAPEZE

3" = 1'-0" C303203 **16**

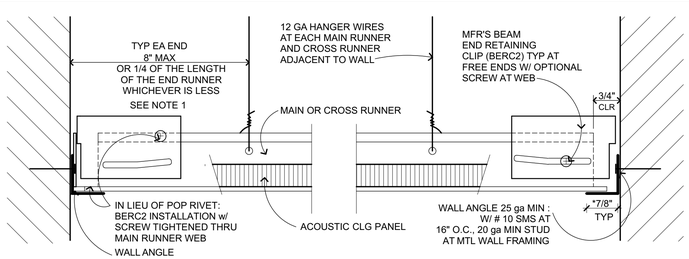

"FIXED" END" "FREE" END"

BASIS OF DESIGN: ARMSTRONG PRELUDE XL SEISMIC Rx. ICC ESR 1308. REFER TO SPECIFICATIONS FOR ALTERNATE MANUFACTURERS.

NOTE 1: PERIMETER WIRES ARE NOT REQUIRED WHEN LENGTH OF TEE IS 8" OR LESS.

*NOTE 2: PER IR 25-2.13 FIGURE 2.60 ALLOWS A SMALLER ANGLE WHEN USED IN CONJUCTION WITH A PROPRIETARY SEISMIC CLIP. USE PROPRIETARY CLIP PER MFR AS DRAWN AND AS NOTED IN SPECIFICATIONS AND ICC ESR REPORT.

SUSP CLG PERIMETER - MFR CLIP

6" = 1'-0" C303206 **8**

PER DSA IR 25.2-13 FIGURE 3.21

EMT COMPRESSION STRUT	MAXIMUM LENGTH
1/2" DIA EMT (0.042" WALL TH)	3'-11"
3/4" DIA EMT (0,049" WALL TH)	6'-4"
1" DIA EMT (0.057" WALL TH)	9'-9"
1 1/4" DIA EMT (0.065" WALL TH)	12'-9"
1-1/2" DIA EMT (0.065" WALL TH)	14'.-9"
2" DIA EMT (0.065" WALL TH)	18'-10"

CHANNEL COMPRESSION STRUT	MAXIMUM LENGTH
250S125-33	5'-0"
250S137-33	6'-10"
362S137-33	8'-0"
250S137-43	8'-10"
400S137-43	10'-10"

COMPRESSION STRUT TABLE

1" = 1'-0" C303214 **4**

7D/A-10.4

QUATTROCCHI KWOK ARCHITECTS
Main Office:
636 Fifth Street, Santa Rosa, CA 95404
Pleasanton Office:
600 Main Street, Suite E,
Pleasanton, CA 94566
(707) 576-0829

LICENSED ARCHITECT
JIM THEISS
LICENSE # C22643
EXP JUNE 30, 2021
STATE OF CALIFORNIA

SIGNED: AUGUST 13, 2019

Determine which spacing is for this project based on Sds. 12x12 is ok since Sds=1.0. use details corresponding to 12x12.

FREEDOM HIGH SCHOOL

PERFORMING ARTS AND CTE FACILITIES

1050 NEROLY RD,
OAKLEY, CA 94561

LIBERTY UNION HIGH SCHOOL DISTRICT

ARCH PROJECT NO:	1739.00
DRAWN BY:	
DRAWING SCALE:	AS NOTED
PTN:	61721-0068

BID SET

AUGUST 13, 2019

SHEET TITLE

CEILING DETAILS

SHEET NUMBER

A-10.4

BIM Server: BIMCLOUD-QKA - BIMcloud/1739.00 - Freedom High School/1739.00 FREEDOM HS Performing Arts Center-8/6/2019 3:15 PM

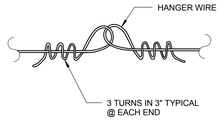

HANGER WIRE ONLY

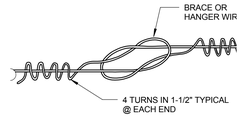

HANGER OR BRACE WIRE

NOTES:

WIRE SPLICES ARE SHOWN LOOSELY TIED FOR ILLUSTRATIVE PURPOSES ONLY AND SHALL BE DRAWN TIGHT TO COMPLETE INSTALLATION WHEN CONSTRUCTED.

CEILING WIRE SPLICES 5

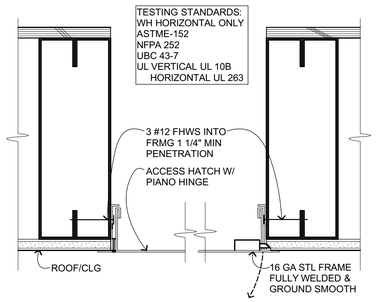

CLG ACCESS PANEL - NONRATED 2

3" = 1'-0"

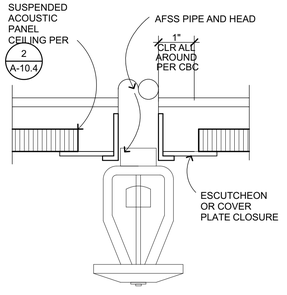

NOTE: IN LIEU OF OVERSIZED RING A FLEXIBLE SPRINKLER HOSE FITTING THAT ALLOWS ONE INCH OF CEILING MOVEMENTSHALL BE PERMITTED

FIRE SPRINKLER HD PLATE 7

6" = 1'-0" C303217

1. CEILING SYSTEM GENERAL NOTES:

1.01 Ceiling system components shall comply with ASTM C635-07 and Section 5.1 of ASTM E580-10a.

1.02 The ceiling grid system must be rated heavy duty as defined by ASTM C635-08.

1.03 Ceiling systems. The following ceiling system(s) is/are part of the scope of this project:
REFER TO SPEC SECTION 09-5100 ACOUSTICAL CEILINGS

Manufacturer's Name Armstrong World Industries
Product Evaluation Report Type and Number Prelude XL by Armstrong ICC-ESR-1308
Manufacturer's Model Number - main runner 7301
Manufacturer's catalog number - cross runner XL 7349

1.04 Seismic Wall Clip: BERC2

Manufacturer's Model Seismic 1200 by Chicago Metalic ICC-ESR-2282

1.05 Ceiling panels shall not support any light fixtures, air terminals or devices.

1.06 For ceiling installations utilizing acoustical tile panels of mineral or glass fiber, it is not mandatory to provide ¾" clearance between the acoustical tile panels and the wall on the sides of the ceiling which are free to slip. For all other ceiling panel types, provide ¾" clearance between the ceiling panel and the wall on the sides of the ceiling free to slip.

2. MATERIALS:

2.01 Ceiling wire shall be Class 1 zinc coated (galvanized) carbon steel conforming to ASTM A641-09a. Wire shall be #12 gage (0.106" diameter) with soft temper and minimum tensile strength = 70 ksi.

2.02 Galvanized sheet steel (including that used for metal stud and track compression struts/post) shall conform to ASTM A653-11, or other equivalent sheet steel listed in Section A2.1 of the North American Specification for the Design of Cold-Formed Steel Structural Members 2007, including supplement 2 dated 2010 (AISI S100-07/S2-10). Material 43 mil (18 gage) and lighter shall have minimum yield strength of 33 ksi. Material 54 mil (16 gage) and heavier shall have a minimum yield strength of 50 ksi.

2.03 Electrical metallic tube (EMT) shall be ANSI C80.3/UL 797 carbon steel with G90 galvanizing. EMT shall have minimum yield strength (Fy) of 30 ksi and minimum ultimate strength (Fu) of 48 ksi.

3. ATTACHMENT OF HANGER AND BRACING WIRES:

3.01 Separate all ceiling hanger and bracing wires at least six (6) inches from all unbraced ducts, pipes, conduit, etc.

3.02 Hanger and bracing wires shall not attach to or bend around obstructions including but not limited to: piping, ductwork, conduit and equipment.

3.03 Hanger wires that are more than one (horizontal) in six (vertical) out of plumb shall have counter-sloping wires.

3.04 Slack safety wires shall be considered hanger wires for installation and testing requirement

3.05 Hanger and bracing wire anchorage to the structure shall be installed in such a manner tha the direction of the anchorage aligns closely with the direction of the wire. (e.g. bracing wi ceiling clips must be bent as shown in the details and rotated as required to align closely w the direction of the wire, screw eyes in wood must be installed so they align closely with th direction of the wire, etc.)

4. FASTENERS AND WELDING:

4.01 Sheet metal screws shall comply with ASTM C1513-10, ASME B18.6.4-89 (R2005). Penetration of screws through joined material shall not be less than three exposed threads.

4.02 Expansion anchors shall be:

4.03 Power-Actuated Fasteners shall be:

4.04 If not otherwise specified in the evaluation report, power-actuated fasteners installed in steel shall be installed so the entire pointed end of the fastener is driven through the steel member.

4.05 Power-actuated fasteners in concrete are not permitted for bracing wires.

4.06 Concrete reinforcement and prestressing tendons shall be located by non-destructive means prior to installing post - installed anchor.

4.07 Welding shall be in accordance with AWS D1.3 using E60XX series electrodes.

5. TESTING: All field testing must be performed in the presence of the project inspector.

5.01 Post-installed anchors in concrete used to support hanger wires shall be tested at a frequency of 10 percent. Power actuated fasteners in concrete shall be field tested for 200 lbs. in tension. All other post-installed anchors in concrete shall be tested in accordance with CBC Section 1913A.7.

5.02 Post-installed anchors in concrete used to attach bracing wires shall be tested at a frequency of 50 percent in accordance with CBC Section 1913A.7.

6. LIGHT FIXTURES:

6.01 All light fixtures shall be positively attached to the ceiling suspension systems by mechanical means to resist a horizontal force equal to the weight of the fixture. A minimum of two screws or approved fasteners are required at each light fixture, per ASTM E580, Section 5.3.1.

6.02 Surface-mounted light fixtures shall be attached to the main runner with at least two positive clamping devices. The clamping device shall completely surround the supporting ceiling runner and be made of steel with a minimum thickness of #14 gage. Rotational spring catches do not comply. A #12 gage slack safety wire shall be connected from each clamping device to the structure above. Provide additional supports when light fixtures are eight (8) feet or longer or exceed 56 lb. Maximum spacing between supports shall not exceed eight (8) feet.

6.03 Light fixtures weighing less than or equal to 10 lb. shall have a minimum of one (1) #12 gage slack safety wire connected from the fixture housing to the structure above.

6.04 Light fixtures weighing less than or equal to 10 lb. shall have a minimum of one (1) #12 gage slack safety wire connected from the fixture housing to the structure above.

6.05 Light fixtures weighing greater than 10 lb. but less than or equal to 56 lbs. may be supported directly on the ceiling runners, but they shall have a minimum of two (2) #12 gage slack safety wires connected from the fixture housing at diagonal corners to the structure above.

Exception: All light fixtures greater than two by four feet weighing less than 56 lbs. shall have a #12 gage slack safety wire at each corner.

6.06 All Light fixtures weighing greater than 56 lb. shall be independently supported by not less than four (4) taut #12 gage hanger wires (one at each corner) attached from the fixture housing to the structure above or other approved hangers. The four (4) taut #12 gage wires or other approved hangers, including their attachment to the structure above, shall be capable of supporting four (4) times the weight of the fixture.

7. SERVICES WITHIN THE CEILING:

7.01 All flexible sprinkler hose fitting mounting brackets, ceiling-mounted air terminals or other services shall be positively attached to the ceiling suspension systems by mechanical means. Screws or approved fasteners are required. A minimum of two attachments are required at each component.

7.02 Ceiling-mounted air terminals or other services weighing less than or equal to 20 lb. shall have one (1) #12 gage slack safety wire attached from the terminal or service to the structure above.

7.03 Flexible sprinkler hose fittings, ceiling-mounted air terminals or other services weighing more than 20 lb. but less than or equal to 56 lb. shall have two (2) #12 gage slack safety wires (at diagonal corners) connected from the terminal or service to the structure above.

7.04 Flexible sprinkler hose fittings, ceiling-mounted air terminals or other services weighing more than 56 lb. shall be supported directly from the structure above by not less than four (4) taut #12 gage hanger wires attached from the terminal or service to the structure above or other approved hangers.

8. OTHER DEVICES WITHIN THE CEILING:

8.01 All lightweight miscellaneous devices, such as strobe lights, occupancy sensors, speakers, exit signs, etc., shall be attached to the ceiling grid. In addition, devices weighing more than 10 lbs. shall have a #12 gage slack safety wire anchored to the structure above. Devices weighing more than 20 lb. shall be supported independently from the structure above.

TYP SUSP CLG NOTES IR 25-2.13 APPENDIX A 4

1/8" = 1'-0" C303209 2013

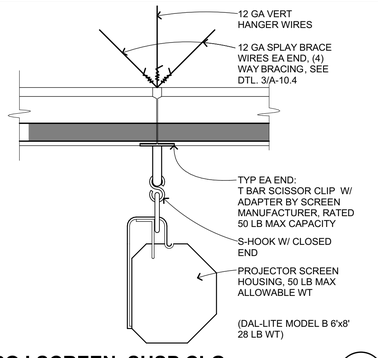

PROJ SCREEN SUSP CLG 20

6" = 1'-0" E102302

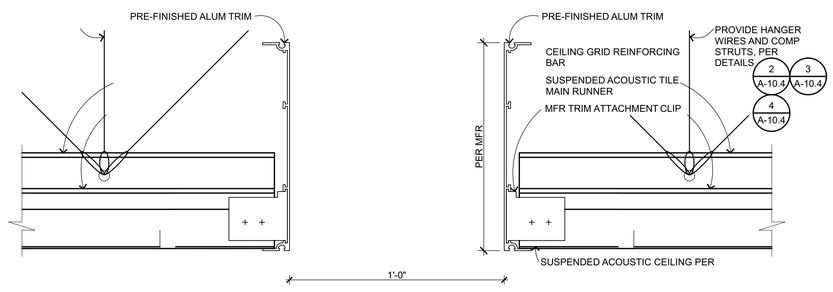

TYP. EDGE DETAIL A

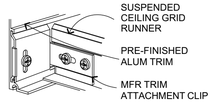

TRIM ATTACHMENT B

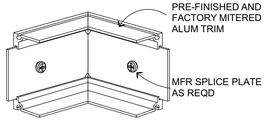

TRIM CORNER C

CEILING CLOUD EDGE 12

6" = 1'-0"

BIM Server: BIMCLOUD-QKA - BIMcloud/1739.00 - Freedom High School/1739.00 FREEDOM HS Performing Arts Center;8/6/2019;3:15 PM

Provide the information per instructions.

QUATTROCCHI KWOK ARCHITECTS
Main Office:
636 Fifth Street, Santa Rosa, CA 95404
Pleasanton Office:
600 Main Street, Suite E,
Pleasanton, CA 94566
(707) 576-0829

LICENSED ARCHITECT
JIM THEISS
LICENSE # C22643
EXP JUNE 30, 2021
STATE OF CALIFORNIA

SIGNED: AUGUST 13, 2019

FREEDOM HIGH SCHOOL

PERFORMING ARTS AND CTE FACILITIES

1050 NEROLY RD,
OAKLEY, CA 94561

LIBERTY UNION HIGH SCHOOL DISTRICT

ARCH PROJECT NO: 1739.00
DRAWN BY:
DRAWING SCALE: AS NOTED
PTN: 61721-0068

BID SET

AUGUST 13, 2019

SHEET TITLE

CEILING DETAILS

SHEET NUMBER

A-10.5

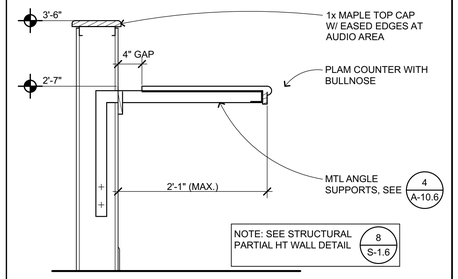

CASEWORK AT AUDIO/CONTROL

1" = 1'-0" CASEWK-1019.02 **1**

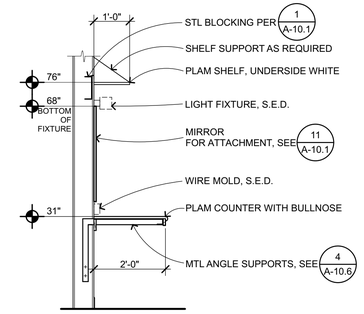

CASEWORK AT DRESSING ROOMS

1/2" = 1'-0" CASEWK-1019.01 **2**

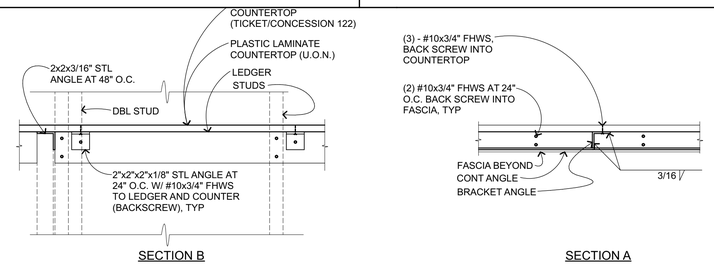

SECTION B SECTION A

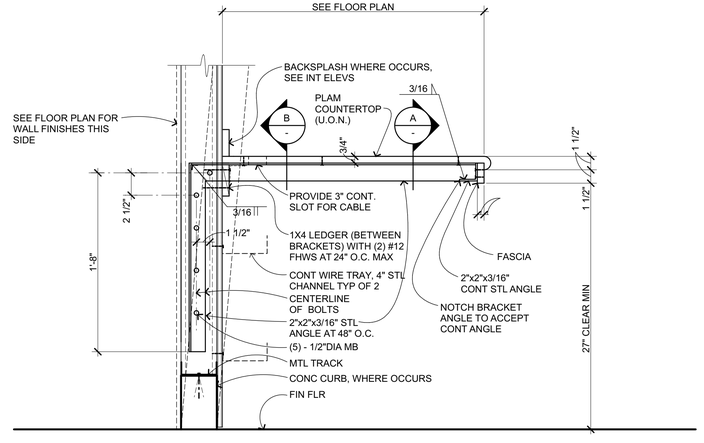

CANTILEVERED COUNTERTOP

1 1/2"= 1'-0" E201114-727 **4**

QUATTROCCHI KWOK
ARCHITECTS

Main Office:
636 Fifth Street, Santa Rosa, CA 95404
Pleasanton Office:
600 Main Street, Suite E,
Pleasanton, CA 94566
(707) 576-0829

LICENSED ARCHITECT
JIM THEISS
LICENSE # C22643
EXP JUNE 30, 2021
STATE OF CALIFORNIA

SIGNED: AUGUST 13, 2019

FREEDOM HIGH SCHOOL

PERFORMING ARTS AND CTE FACILITIES

1050 NEROLY RD,
OAKLEY, CA 94561

LIBERTY UNION HIGH SCHOOL DISTRICT

ARCH PROJECT NO:	1739.00
DRAWN BY:	
DRAWING SCALE:	AS NOTED
PTN:	61721-0068

BID SET

AUGUST 13, 2019

SHEET TITLE

CASEWORK DETAILS

SHEET NUMBER

A-10.6

BIM Server: BIMCLOUD-QKA - BIMcloud/1739.00 - Freedom High School/1739.00 FREEDOM HS Performing Arts Center;8/6/2019;3:17 PM

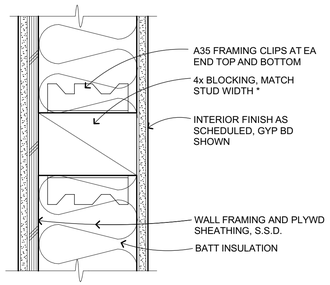

TYPICAL WALL OR CEILING BLOCKING / BACKING FOR ATTACHING FIXTURES, EQUIPMENT, CABINETS, REQUIRED

* WHERE STUD WIDTH > 5 1/2", 4 x 6 AT SIDE OF ATTACHMENT MAY BE USED.

BLK'G/BACKING-WD — 17

3" = 1'-0" C108101_A

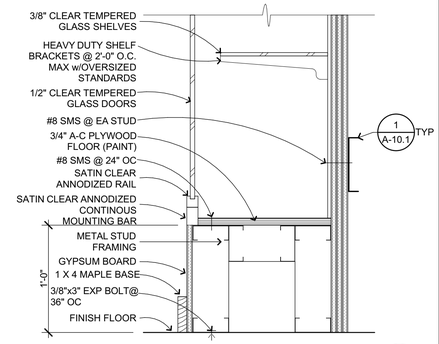

SILL - TROPHY CASE — 5

1 1/2"= 1'-0" TR005

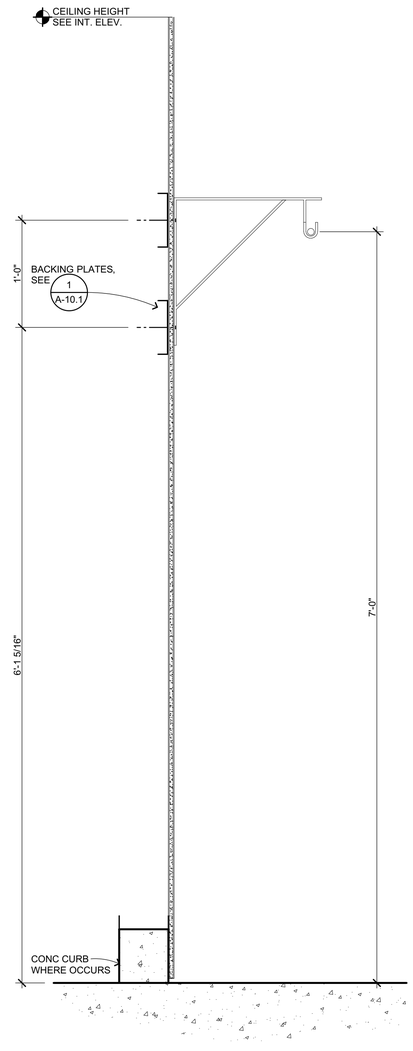

COSTUME STORAGE CASEWORK — 8

1 1/2"= 1'-0"

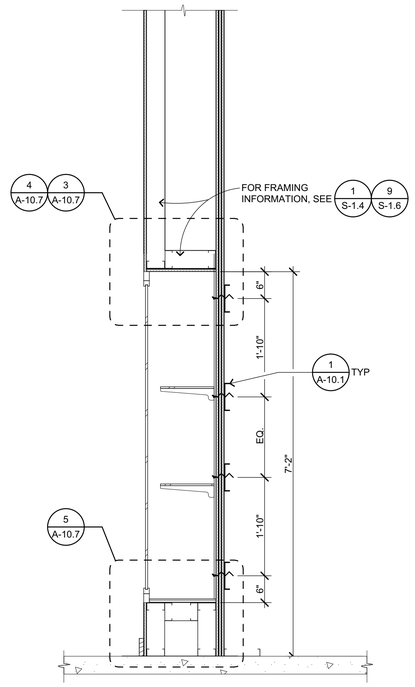

SECTION - TROPHY CASE — 2

3/4" = 1'-0" TR006

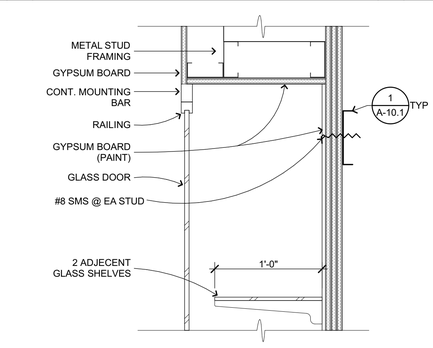

HEAD - TROPHY CASE — 3

1 1/2"= 1'-0" TR004

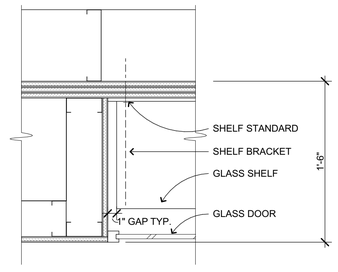

JAMB -TROPHY CASE — 4

1 1/2"= 1'-0" TR003

QUATTROCCHI KWOK ARCHITECTS
Main Office:
636 Fifth Street, Santa Rosa, CA 95404
Pleasanton Office:
600 Main Street, Suite E,
Pleasanton, CA 94566
(707) 576-0829

LICENSED ARCHITECT
JIM THEISS
LICENSE # C22643
EXP JUNE 30, 2021
STATE OF CALIFORNIA

SIGNED: AUGUST 13, 2019

FREEDOM HIGH SCHOOL

PERFORMING ARTS AND CTE FACILITIES

1050 NEROLY RD,
OAKLEY, CA 94561

LIBERTY UNION HIGH SCHOOL DISTRICT

ARCH PROJECT NO:	1739.00
DRAWN BY:	
DRAWING SCALE:	AS NOTED
PTN:	61721-0068

BID SET

AUGUST 13, 2019

SHEET TITLE

CASEWORK DETAILS

SHEET NUMBER

A-10.7

BIM Server: BIMCLOUD-QKA - BIMcloud/1739.00 - Freedom High School/1739.00 FREEDOM HS Performing Arts Center:8/6/2019 4:08 PM

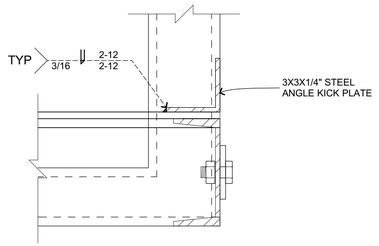

WELDED KICK PLATE

3" = 1'-0"

17

Provide retaining device to prevent sliding out. TYP

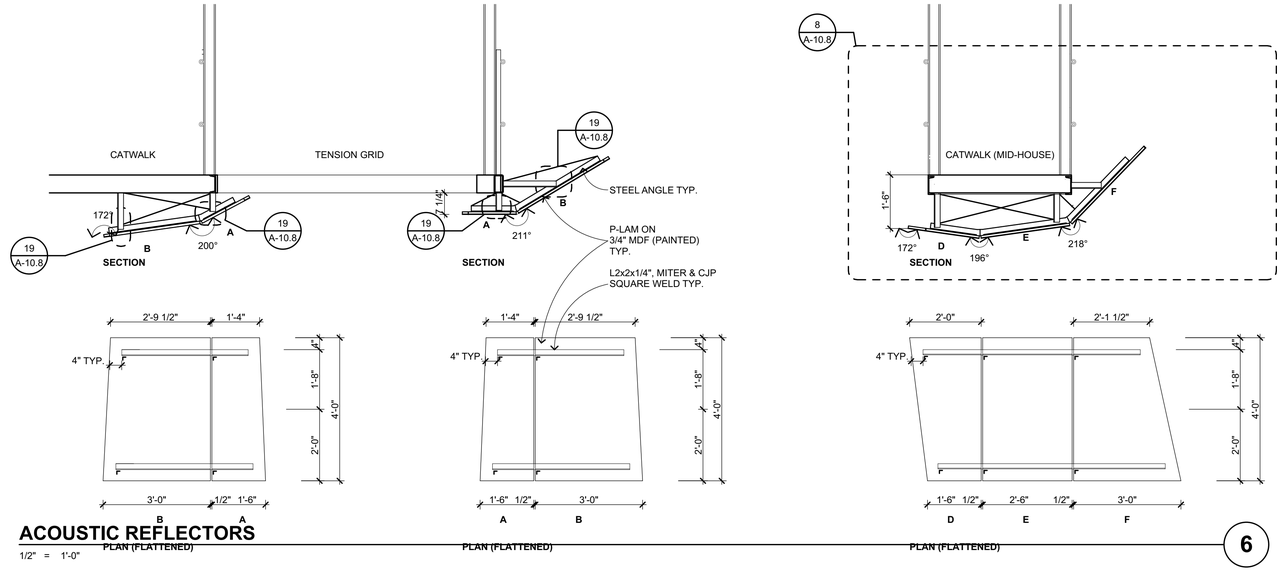

ACOUSTIC REFLECTORS

1/2" = 1'-0"

6

Provide 4 way lateral bracing and all details. Provide structural verification for all details.

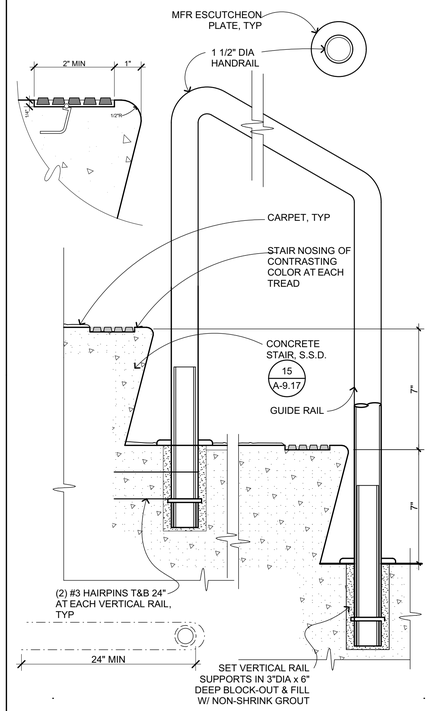

THEATER AISLE STEPS

C203105

3" = 1'-0"

2

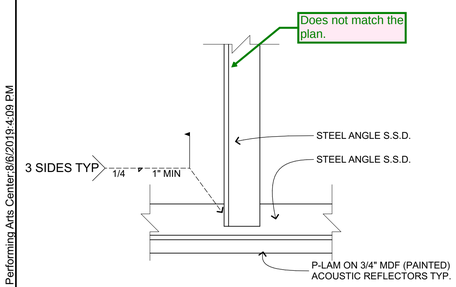

WELDED ACOUSTIC REFLECTOR CONNECTION

3" = 1'-0"

19

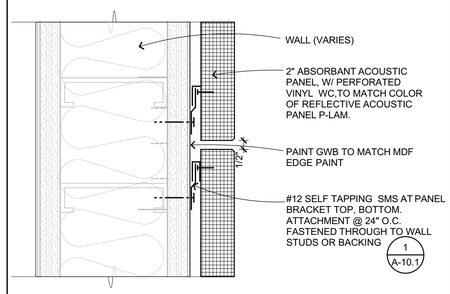

ABSORBANT ACOUSTIC PANELS

3" = 1'-0"

15

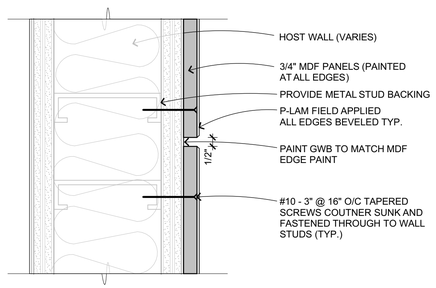

REFLECTIVE ACOUSTIC PANELS

3" = 1'-0"

11

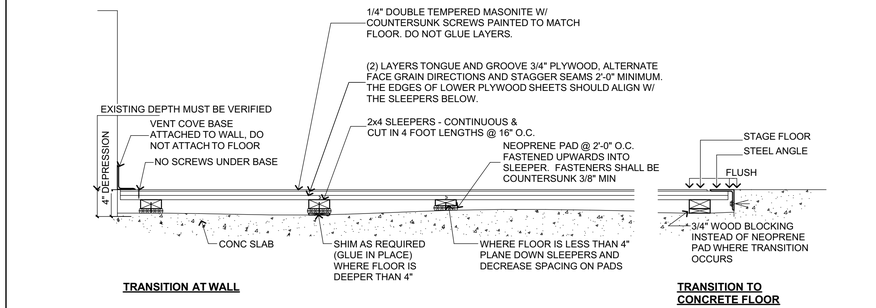

CUSHIONED STAGE FLOOR CONSTRUCTION DETAILS

1" = 1'-0"

3

Provide ICC or equivalent for the connector.

Provide structural details for the pipe and its connection to the hangers.

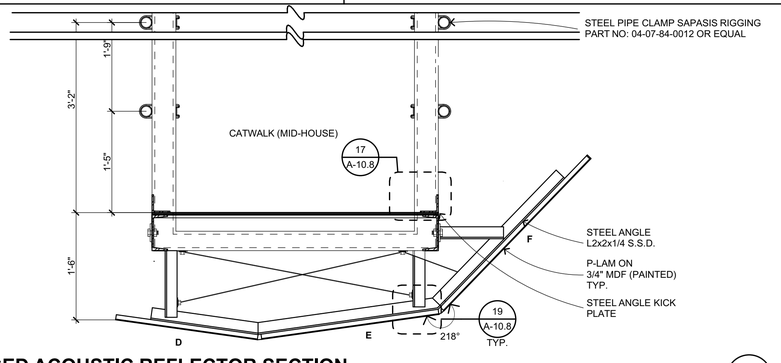

ENLARGED ACOUSTIC REFLECTOR SECTION

1" = 1'-0"

8

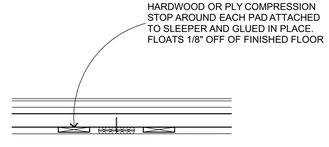

COMPRESSION STOP DETAIL

1 1/2"= 1'-0"

4

QUATTROCCHI KWOK
ARCHITECTS
Main Office:
636 Fifth Street, Santa Rosa, CA 95404
Pleasanton Office:
600 Main Street, Suite E,
Pleasanton, CA 94566
(707) 576-0829

LICENSED ARCHITECT
JIM THEISS
LICENSE # C22643
EXP JUNE 30, 2021
STATE OF CALIFORNIA

SIGNED: AUGUST 13, 2019

FREEDOM HIGH SCHOOL

PERFORMING ARTS AND CTE FACILITIES

1050 NEROLY RD,
OAKLEY, CA 94561

LIBERTY UNION HIGH SCHOOL DISTRICT

ARCH PROJECT NO:	1739.00
DRAWN BY:	
DRAWING SCALE:	AS NOTED
PTN:	61721-0068

BID SET

AUGUST 13, 2019

SHEET TITLE

THEATER DETAILS

SHEET NUMBER

A-10.8

BIM Server: BIMCLOUD-QKA - BIMcloud/1739.00 - Freedom High School/1739.00 FREEDOM HS Performing Arts Center;8/6/2019;4:09 PM

MINIMUM CBC REQUIREMENTS.

TYPICAL PLAQUE NOTES U.O.N.

PLAQUES WITH TACTILE LETTERING AND SYMBOLS (RAISED 1/32") INCLUDES CALIFORNIA CONTRACTED GRADE 2 BRAILLE RAISED 1/40" PER CBC REQUIREMENTS. SAN SERIF FONT SELECTION SHALL HAVE THE WIDTH OF THE UPPERCASE LETTER "O" IS 60% MIN AND 110% MAX OF THE HEIGHT OF THE UPPERCASE LETTER "I". A STROKE WIDTH TO HEIGHT OF THE UPPERCASE LETTER "I" SHALL BE 15% MAX OF HT OF CHARACTER.

CUSTOM COLORS, LAYOUT & LETTER STYLES TO BE SELECTED & APPROVED BY ARCHITECT, SIGNAGE SYMBOLS, BACKGROUND, MOUNTING SURFACE TO CONTRAST, 70% MINIMUM CONTRAST.

WHERE SIGN PLAQUES ARE PLACED ON GLASS, ANY BACKING PLAQUE OR SIGN IS TO BE THE SAME SIZE.

ALL CODE-GOVERNED SIGNS ARE TO BE FIELD-INSPECTED PER CBC 11B-703.1.1.2.

TEXT

TEXT SIZE*
5/8" MIN. TEXT (48 PT) 2" MAX.

MOUNTING OF SIGNS

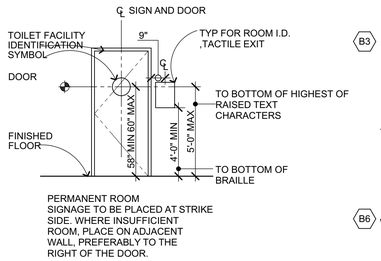

PERMANENT ROOM SIGNAGE TO BE PLACED AT STRIKE SIDE. WHERE INSUFFICIENT ROOM, PLACE ON ADJACENT WALL, PREFERABLY TO THE RIGHT OF THE DOOR.

A1 **ACCESSIBLE ENTRANCE SIGN**

VINYL 4"X4" BACKING WITH VINYL SYMBOL. 3M REFLECTIVE BLUE BACKGROUND WITH 3M REFLECTIVE WHITE SYMBOL. PROVIDE AT MAIN ENTRANCE AS NOTED AND AT BLEACHERS.

STRIKE SIDE TOILET ROOM SIGNAGE
(PLAQUE NOTES TYP FOR EACH SIGN)

PROVIDE AT ACCESSIBLE TOILET ROOMS.
USE "GIRLS" & BOYS" WHERE TOILET ROOMS ARE PRIMARILY USED BY CHILDREN.

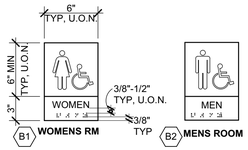

B1 **WOMENS RM** B2 **MENS ROOM**



B3 **GIRLS RM** B4 **BOYS ROOM** B5 **UNISEX**

TOILET ROOM DOOR SIGNAGE
(NOTES TYP FOR EACH SIGN)

PROVIDE AT ACCESSIBLE TOILET ROOMS.

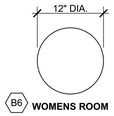

B6 **WOMENS ROOM**

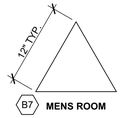

B7 **MENS ROOM**



B8 **UNISEX**

UNISEX TOILET FACILITY IDENTIFICATION SYMBOLS

CIRCLE, 12 INCHES IN DIAMETER WITH AN EQUILATERAL TRIANGLE 1/4" THICK SUPERIMPOSED ON THE CIRCLE AND WITHIN THE 12 INCH DIAMETER VERTEX POINTING UPWARD. COLOR AND CONTRAST SHALL BE DISTINCTLY DIFFERENT THAN THAT OF THE DOOR. 70 LETTER STYLE MINIMUM CONTRAST. DOUBLE STICK FOAM TAPE ADHESIVE. SEE PLANS FOR LOCATIONS.

PROVIDE AT ACCESSIBLE TOILET ROOM DOOR CENTERED AT 60" HIGH. SEE ACCOMPANYING DIAGRAM.

A2 **LIFT SIGNAGE**

LAYOUT AND LETTER STYLE TO BE SELECTED & APPROVED BY ARCHITECT.



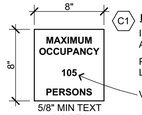

C1 **ROOM OCCUPANCY SIGNAGE**

INSTALLATION LOCATION PER PLANS AND CBC REQUIREMENTS.

PROVIDE AT ALL ROOMS W/ OCCUPANT LOADS GREATER THAN 50

VERIFY ACTUAL # W/ ARCHITECT

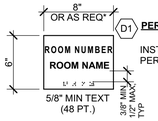

D1 **PERMANENT ROOM I.D. SIGNAGE**

INSTALL NEXT TO ENTRANCE DOORS, PER CBC REQUIREMENTS.

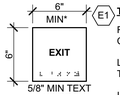

E1 **TACTILE EXIT SIGN AT ALL EXIT DOORS**

RAISED LETTERS "EXIT". BRAILLE "EXIT". CONTRACTED GRADE 2 BRAILLE

LOCATED AT ALL EXIT DOORS IN ADDITION TO OVERHEAD, ILLUMINATED EXIT SIGNS.

INSTALL ON THE WALL ADJACENT TO THE LATCH ON THE OUTSIDE OF THE DOOR WHERE THERE IS NO WALL SPACE ON THE WALL LATCH SIDE INCLUDING AT DOUBLE LEAF DOORS. SIGNS SHALL BE PLACED ON THE NEAREST ADJACENT WALL, PREFERABLY ON THE RIGHT SIDE.

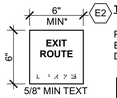

E2 **TACTILE EXIT ROUTE SIGN**

POST AS INDICATED AT DOORS TO EXIT ROUTE THAT DO NOT LEAD DIRECTLY TO THE EXTERIOR

*MIN DIMENSIONS SHOWN, WHERE BACK TO BACK SIGNS ARE APPLIED OVER GLASS, WIDTHS TO MATCH.

A3 **ACCESSIBLE SEATING AVAILABLE**

LAYOUT AND LETTER STYLE TO BE SELECTED & APPROVED BY ARCHITECT.

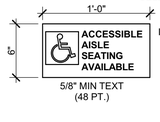

INSTALL AT TICKET WINDOW WALL

C2 **ASSISTIVE LISTENING SIGN**

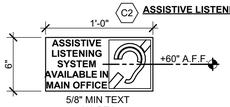

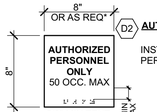

D2 **AUTHORIZED PERSONNEL ONLY**

INSTALL NEXT TO ENTRANCE DOORS, PER CBC REQUIREMENTS.

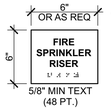

D3 **FIRE SPRINKLER RISER**

LOCATE WHERE INDICATED PER GRAPHIC FLOOR PLANS LOCATIONS

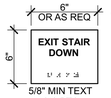

E3 **EXIT STAIR OR EXIT RAMP SIGNAGE**

LOCATE WHERE INDICATED PER GRAPHIC FLOOR PLANS LOCATIONS

ACCESSIBLE SIGNAGE

1/4" = 1'-0"

C103332-2016

2

SIGNAGE GENERAL NOTES

1. ALL SIGNAGE AT MAIN ENTRANCES, TOILETS, PERMANENT ROOMS, ASSISTIVE LISTENING SYSTEMS SHALL COMPLY WITH TITLE 24 CBC AND CBC 11B-703
2. RAISED CHARACTERS SHALL CONFORM TO CBC 11B-703.2 BRAILLE SHALL CONFORM TO 11B-703.3 PICTORIAL SIGNAGE SHALL CONFORM TO 11B-703.6
3. MOUNTING LOCATION AND HEIGHT: (WHERE PERMANENT INDENTIFICATION IS PROVIDED OR WHERE SIGNAGE IS REQUIRED FOR ROOMS AND SPACES): CBC 11B-703.4
4. INTERNATIONAL SYMBOL OF ACCESSIBILITY DESIGN AND COLOR SHALL CONFORM TO CBC 11B-703.7.1 & 11B-703.7.2.1.
5. DOORS TO TOILET ROOMS: PROVIDE SIGNAGE CONFORMING TO CBC 11B-703.7.2.6
6. CONTRAST AND FINISH OF SYMBOLS SHALL CONFORM TO CBC 11B-703.7.1.
7. SIGNS TO BE FIELD INSPECTED PER CBC 118.703.1.1.2.

SIGNAGE GENERAL NOTES

1/4" = 1'-0" 2101006

11

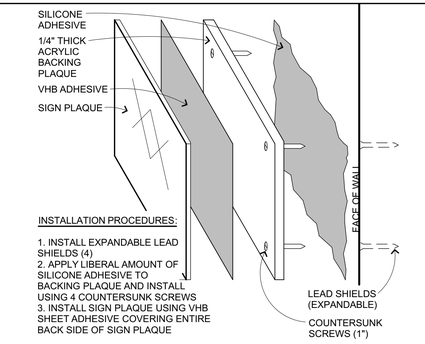

SIGN INSTALLATION

6" = 1'-0" C103301

7

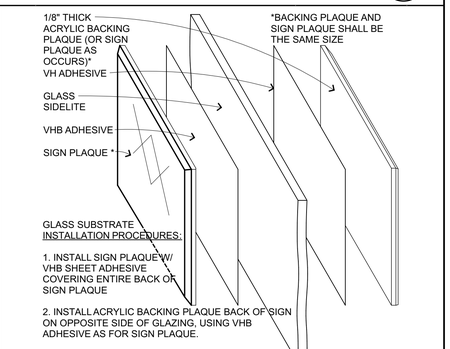

SIGN INSTALLATION AT GLASS

6" = 1'-0" C103304

3

QUATTROCCHI KWOK ARCHITECTS

Main Office:
636 Fifth Street, Santa Rosa, CA 95404
Pleasanton Office:
600 Main Street, Suite E,
Pleasanton, CA 94566
(707) 576-0829

LICENSED ARCHITECT
JIM THEISS
LICENSE # C22643
EXP JUNE 30, 2021
STATE OF CALIFORNIA

SIGNED: AUGUST 13, 2019

FREEDOM HIGH SCHOOL

PERFORMING ARTS AND CTE FACILITIES

1050 NEROLY RD,
OAKLEY, CA 94561

LIBERTY UNION HIGH SCHOOL DISTRICT

ARCH PROJECT NO: 1739.00
DRAWN BY:
DRAWING SCALE: AS NOTED
PTN: 61721-0068

BID SET

AUGUST 13, 2019

SHEET TITLE

SIGNAGE DETAILS

SHEET NUMBER

A-10.9

BIM Server: BIMCLOUD-QKA - BIMcloud/1739.00 - Freedom High School/1739.00 FREEDOM HS Performing Arts Center;8/6/2019 4:09 PM



ARCHITECTURAL GRAPHICS FIRST FLOOR PLAN

1/8" = 1'-0" (1)

NORTH

GRAPHICS PLAN KEYNOTES

NOT ALL KEYNOTES MAY APPLY TO THIS SHEET

(1) SIGNAGE INSTALLATION ON GLASS (3 / A-10.9)

SIGNAGE GENERAL NOTES

1. ALL SIGNAGE AT MAIN ENTRANCES, TOILETS, PERMANENT ROOMS, ASSISTIVE LISTENING SYSTEMS SHALL COMPLY WITH TITLE 24 CBC AND CBC 11B-703
2. RAISED CHARACTERS SHALL CONFORM TO CBC 11B-703.2
   BRAILLE SHALL CONFORM TO 11B-703.3
   PICTORIAL SIGNAGE SHALL CONFORM TO 11B-703.6
3. MOUNTING LOCATION AND HEIGHT: (WHERE PERMANENT INDENTIFICATION IS PROVIDED OR WHERE SIGNAGE IS REQUIRED FOR ROOMS AND SPACES): CBC 11B-703.4
4. INTERNATIONAL SYMBOL OF ACCESSIBILITY DESIGN AND COLOR SHALL CONFORM TO CBC 11B-703.7.1 & 11B-703.7.2.1.
5. DOORS TO TOILET ROOMS: PROVIDE SIGNAGE CONFORMING TO CBC 11B-703.7.2.6
6. CONTRAST AND FINISH OF SYMBOLS SHALL CONFORM TO CBC 11B-703.7.1.
7. SIGNS TO BE FIELD INSPECTED PER CBC 118.703.1.1.2.

Z101006

SIGNAGE LEGEND

ACCESSIBLE SIGNAGE (2 / A-10.9)

KEY PLAN

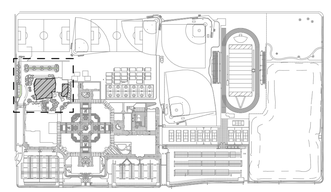

QUATTROCCHI KWOK ARCHITECTS
Main Office:
636 Fifth Street, Santa Rosa, CA 95404
Pleasanton Office:
600 Main Street, Suite E,
Pleasanton, CA 94566
(707) 576-0829

LICENSED ARCHITECT
JIM THEISS
LICENSE # C22643
EXP JUNE 30, 2021
STATE OF CALIFORNIA

SIGNED: AUGUST 13, 2019

FREEDOM HIGH SCHOOL

PERFORMING ARTS AND CTE FACILITIES

1050 NEROLY RD,
OAKLEY, CA 94561

LIBERTY UNION HIGH SCHOOL DISTRICT

ARCH PROJECT NO:	1739.00
DRAWN BY:	
DRAWING SCALE:	1/8" = 1'-0"
PTN:	61721-0068

BID SET

AUGUST 13, 2019

SHEET TITLE

BLDG A FIRST FLOOR GRAPHICS PLAN

SHEET NUMBER

AG-A2.1

BIM Server: BIMCLOUD-QKA - BIMcloud/1739.00 - Freedom High School/1739.00 FREEDOM HS Performing Arts Center:8/6/2019 5:14 PM

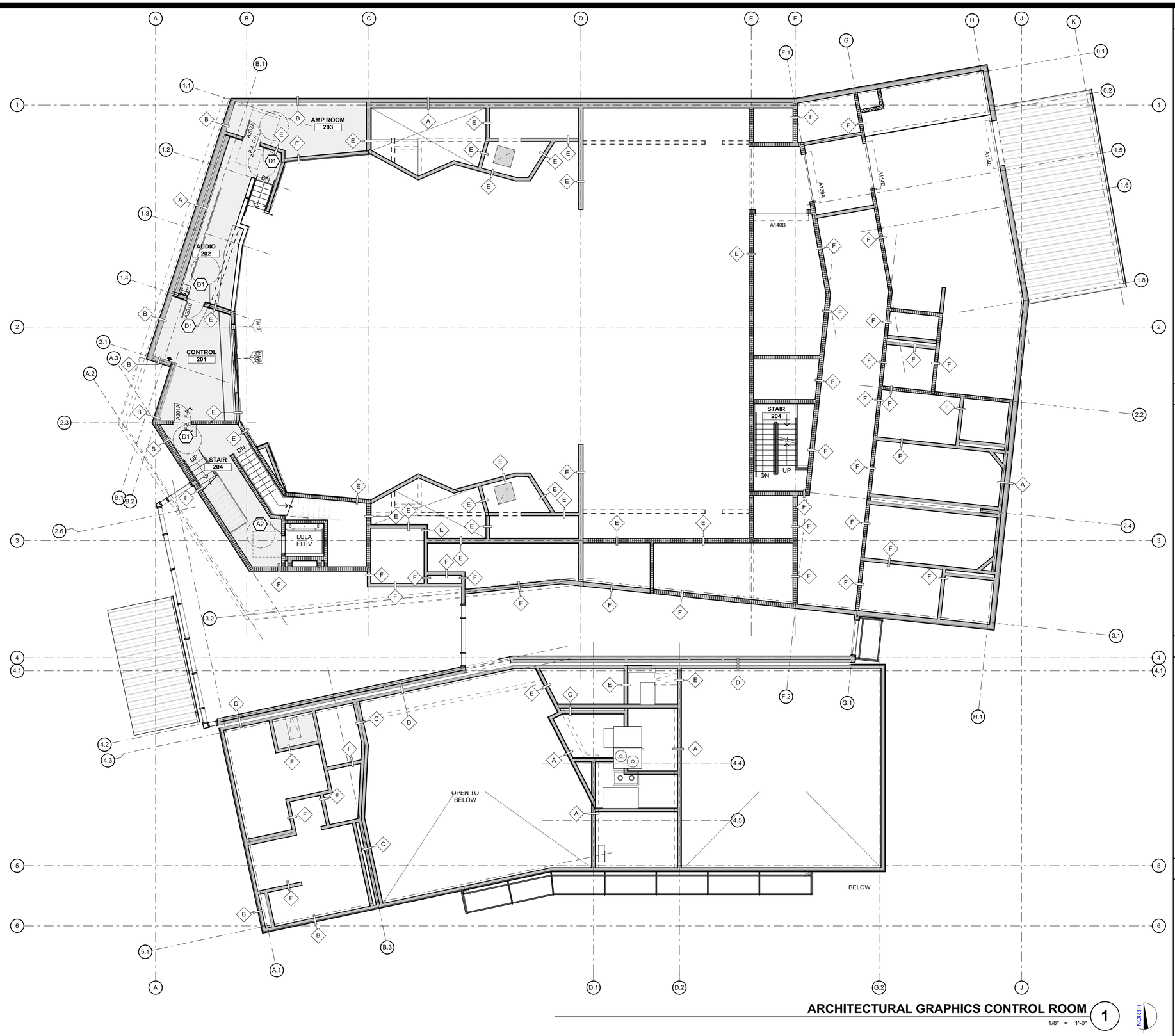

ARCHITECTURAL GRAPHICS CONTROL ROOM

1/8" = 1'-0"

1

NORTH

GRAPHICS PLAN KEYNOTES

NOT ALL KEYNOTES MAY APPLY TO THIS SHEET

1 SIGNAGE INSTALLATION ON GLASS 3/A-10.9

SIGNAGE GENERAL NOTES

1. ALL SIGNAGE AT MAIN ENTRANCES, TOILETS, PERMANENT ROOMS, ASSISTIVE LISTENING SYSTEMS SHALL COMPLY WITH TITLE 24 CBC AND CBC 11B-703
2. RAISED CHARACTERS SHALL CONFORM TO CBC 11B-703.2
   BRAILLE SHALL CONFORM TO 11B-703.3
   PICTORIAL SIGNAGE SHALL CONFORM TO 11B-703.6
3. MOUNTING LOCATION AND HEIGHT: (WHERE PERMANENT INDENTIFICATION IS PROVIDED OR WHERE SIGNAGE IS REQUIRED FOR ROOMS AND SPACES): CBC 11B-703.4
4. INTERNATIONAL SYMBOL OF ACCESSIBILITY DESIGN AND COLOR SHALL CONFORM TO CBC 11B-703.7.1 & 11B-703.7.2.1.
5. DOORS TO TOILET ROOMS: PROVIDE SIGNAGE CONFORMING TO CBC 11B-703.7.2.6
6. CONTRAST AND FINISH OF SYMBOLS SHALL CONFORM TO CBC 11B-703.7.1.
7. SIGNS TO BE FIELD INSPECTED PER CBC 118.703.1.1.2.

Z101006

SIGNAGE LEGEND

ACCESSIBLE SIGNAGE 2/A-10.9

KEY PLAN

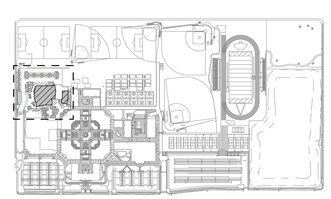

QUATTROCCHI KWOK ARCHITECTS
Main Office:
636 Fifth Street, Santa Rosa, CA 95404
Pleasanton Office:
600 Main Street, Suite E,
Pleasanton, CA 94566
(707) 576-0829

LICENSED ARCHITECT
JIM THEISS
LICENSE # C22643
EXP JUNE 30, 2021
STATE OF CALIFORNIA

SIGNED: AUGUST 13, 2019

FREEDOM HIGH SCHOOL

PERFORMING ARTS AND CTE FACILITIES

1050 NEROLY RD,
OAKLEY, CA 94561

LIBERTY UNION HIGH SCHOOL DISTRICT

ARCH PROJECT NO:	1739.00
DRAWN BY:	
DRAWING SCALE:	
PTN:	61721-0068

BID SET

AUGUST 13, 2019

SHEET TITLE

BLDG A CONTROL RM GRAPHICS PLAN

SHEET NUMBER

AG-A2.2

BIM Server: BIMCLOUD-QKA - BIMcloud/1739.00 - Freedom High School/1739.00 FREEDOM HS Performing Arts Center.8/6/2019 5:15 PM

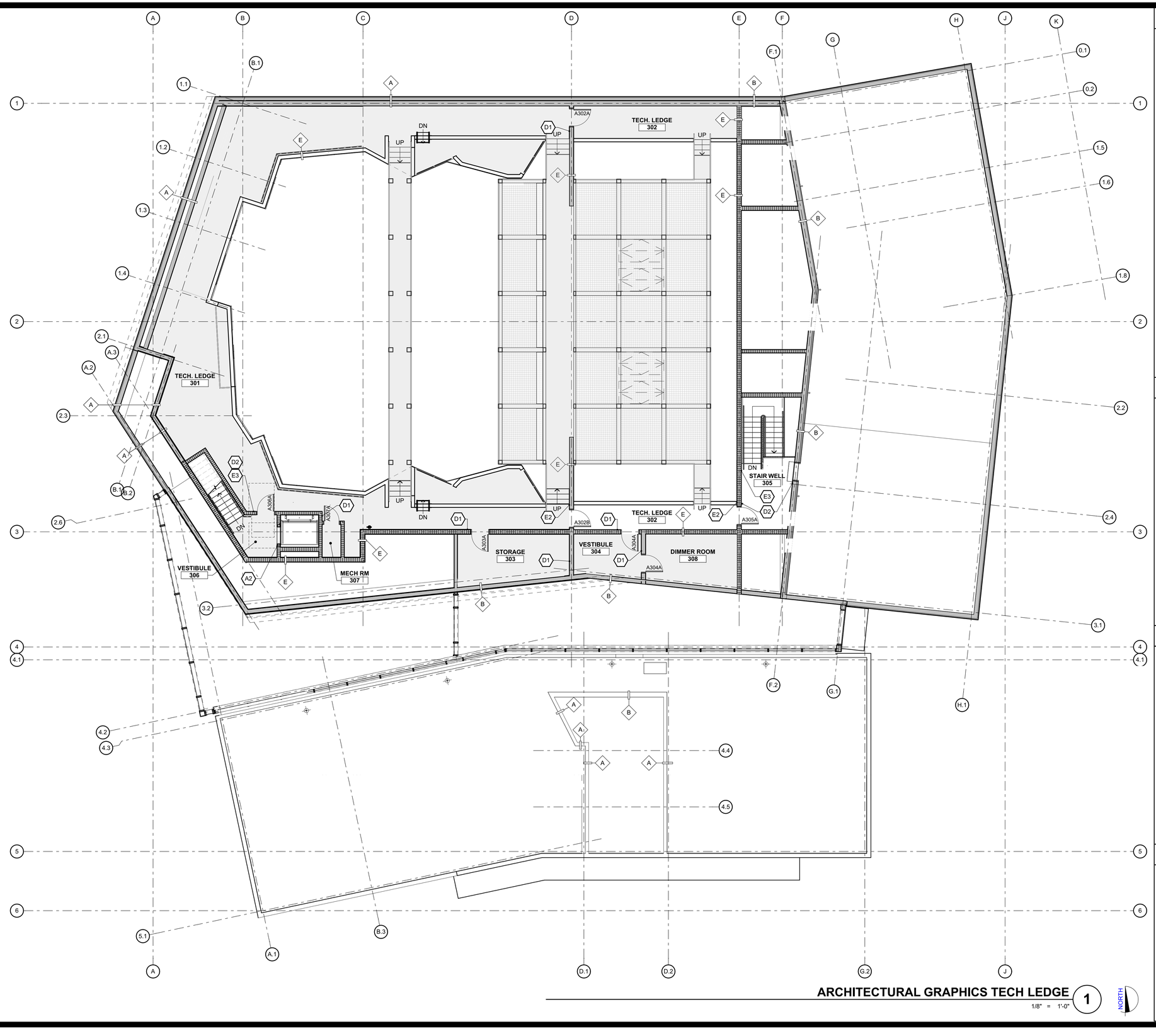

ARCHITECTURAL GRAPHICS TECH LEDGE 1

1/8" = 1'-0"

NORTH

GRAPHICS PLAN KEYNOTES

NOT ALL KEYNOTES MAY APPLY TO THIS SHEET

1 SIGNAGE INSTALLATION ON GLASS (3 / A-10.9)

SIGNAGE GENERAL NOTES

1. ALL SIGNAGE AT MAIN ENTRANCES, TOILETS, PERMANENT ROOMS, ASSISTIVE LISTENING SYSTEMS SHALL COMPLY WITH TITLE 24 CBC AND CBC 11B-703
2. RAISED CHARACTERS SHALL CONFORM TO CBC 11B-703.2
   BRAILLE SHALL CONFORM TO 11B-703.3
   PICTORIAL SIGNAGE SHALL CONFORM TO 11B-703.6
3. MOUNTING LOCATION AND HEIGHT: (WHERE PERMANENT INDENTIFICATION IS PROVIDED OR WHERE SIGNAGE IS REQUIRED FOR ROOMS AND SPACES): CBC 11B-703.4
4. INTERNATIONAL SYMBOL OF ACCESSIBILITY DESIGN AND COLOR SHALL CONFORM TO CBC 11B-703.7.1 & 11B-703.7.2.1.
5. DOORS TO TOILET ROOMS: PROVIDE SIGNAGE CONFORMING TO CBC 11B-703.7.2.6
6. CONTRAST AND FINISH OF SYMBOLS SHALL CONFORM TO CBC 11B-703.7.1.
7. SIGNS TO BE FIELD INSPECTED PER CBC 118.703.1.1.2.

Z101006

SIGNAGE LEGEND

ACCESSIBLE SIGNAGE (2 / A-10.9)

KEY PLAN

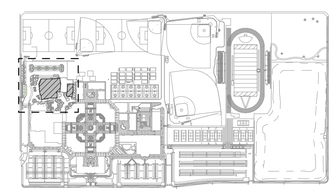

QUATTROCCHI KWOK ARCHITECTS
Main Office:
636 Fifth Street, Santa Rosa, CA 95404
Pleasanton Office:
600 Main Street, Suite E,
Pleasanton, CA 94566
(707) 576-0829

LICENSED ARCHITECT
JIM THEISS
LICENSE # C22643
EXP JUNE 30, 2021
STATE OF CALIFORNIA

SIGNED: AUGUST 13, 2019

FREEDOM HIGH SCHOOL

PERFORMING ARTS AND CTE FACILITIES

1050 NEROLY RD,
OAKLEY, CA 94561

LIBERTY UNION HIGH SCHOOL DISTRICT

ARCH PROJECT NO: 1739.00
DRAWN BY:
DRAWING SCALE:
PTN: 61721-0068

BID SET

AUGUST 13, 2019

SHEET TITLE

BLDG A TECH LEDGE GRAPHICS PLAN

SHEET NUMBER

AG-A2.3

BIM Server: BIMCLOUD-QKA - BIMcloud/1739.00 - Freedom High School/1739.00 FREEDOM HS Performing Arts Center;8/6/2019 5:15 PM

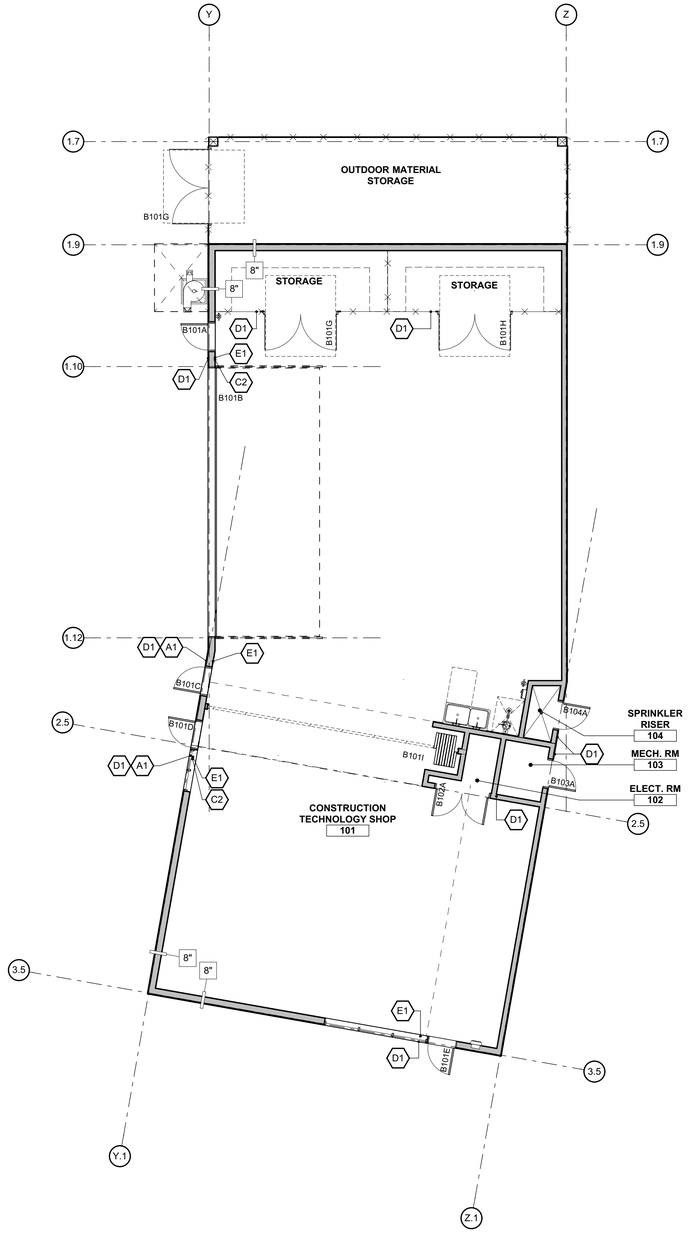

FIRST FLOOR PLAN 1

1/8" = 1'-0"

NORTH

GRAPHICS PLAN KEYNOTES

NOT ALL KEYNOTES MAY APPLY TO THIS SHEET

(1) SIGNAGE INSTALLATION ON GLASS (3 / A-10.9)

SIGNAGE GENERAL NOTES

1. ALL SIGNAGE AT MAIN ENTRANCES, TOILETS, PERMANENT ROOMS, ASSISTIVE LISTENING SYSTEMS SHALL COMPLY WITH TITLE 24 CBC AND CBC 11B-703
2. RAISED CHARACTERS SHALL CONFORM TO CBC 11B-703.2
   BRAILLE SHALL CONFORM TO 11B-703.3
   PICTORIAL SIGNAGE SHALL CONFORM TO 11B-703.6
3. MOUNTING LOCATION AND HEIGHT: (WHERE PERMANENT INDENTIFICATION IS PROVIDED OR WHERE SIGNAGE IS REQUIRED FOR ROOMS AND SPACES): CBC 11B-703.4
4. INTERNATIONAL SYMBOL OF ACCESSIBILITY DESIGN AND COLOR SHALL CONFORM TO CBC 11B-703.7.1 & 11B-703.7.2.1.
5. DOORS TO TOILET ROOMS: PROVIDE SIGNAGE CONFORMING TO CBC 11B-703.7.2.6
6. CONTRAST AND FINISH OF SYMBOLS SHALL CONFORM TO CBC 11B-703.7.1.
7. SIGNS TO BE FIELD INSPECTED PER CBC 118.703.1.1.2.

Z101006

SIGNAGE LEGEND

ACCESSIBLE SIGNAGE (2 / A-10.9)

KEY PLAN

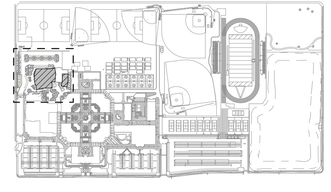

QUATTROCCHI KWOK ARCHITECTS
Main Office:
636 Fifth Street, Santa Rosa, CA 95404
Pleasanton Office:
600 Main Street, Suite E,
Pleasanton, CA 94566
(707) 576-0829

LICENSED ARCHITECT
JIM THEISS
LICENSE # C22643
EXP JUNE 30, 2021
STATE OF CALIFORNIA

SIGNED: AUGUST 13, 2019

FREEDOM HIGH SCHOOL

PERFORMING ARTS AND CTE FACILITIES

1050 NEROLY RD,
OAKLEY, CA 94561

LIBERTY UNION HIGH SCHOOL DISTRICT

ARCH PROJECT NO:	1739.00
DRAWN BY:	
DRAWING SCALE:	
PTN:	61721-0068

BID SET

AUGUST 13, 2019

SHEET TITLE

BLDG B FIRST FLOOR GRAPHICS PLAN

SHEET NUMBER

AG-B2.1

BIM Server: BIMCLOUD-QKA - BIMcloud/1739.00 - Freedom High School/1739.00 FREEDOM HS Performing Arts Center;8/6/2019;5:15 PM

E SHEAR WALL NOTES

1. PEN = PLYWOOD/OSB SHEATHING EDGE NAILING. BLOCK ALL UNSUPPORTED EDGES WITH 2x MATERIAL UNO. BLOCK EDGES WITH 3x MATERIAL WHERE NAILING IS 4"oc OR LESS. SEE **11/S-1.2** FOR NAIL STAGGER AT ALL 3x.
2. FIELD NAILING TO BE 12"oc UNO.
3. ALL SHEATHING NAILS TO BE COMMON WIRE. SEE **D/S-0.1** AND SPECIFICATIONS FOR OTHER NAIL REQUIREMENTS.
4. ALL EXTERIOR WALLS NOT DESIGNATED AS SHEAR WALLS ON PLANS TO HAVE SHEATHING AND PEN NAILING PER SHEAR WALL TYPE **'A'**.
5. SHEAR WALL LENGTHS, WHERE NOTED, ARE MINIMUM. DO NOT LOCATE HOLDOWNS FROM THESE DIMENSIONS. SAD FOR ACTUAL WALL LENGTHS.
6. HOLDOWN REFERS TO SIMPSON STRONG TIE CO. HOLDOWNS. INSTALL HOLDOWNS AND REQUIRED POSTS PER **8/S-1.2** AND **9/S-1.2** . SEE PLANS FOR OTHER REQUIREMENTS.
7. EDGE NAIL WALL SHEATHING TO STUDS OR POSTS WITH HOLDOWNS.
8. PORTIONS OF INTERIOR WALL SURFACES ADJACENT TO SPECIFIED SHEAR WALLS SHALL BE SHEATHED FOR THE FULL, UNINTERRUPTED LENGTH TO MATCH EXTERIOR WALLS OR WITH GYPSUM BOARD OF THE SAME THICKNESS TO PROVIDE AN EVEN WALL SURFACE FOR FINISH MATERIALS.
9. SHEAR WALLS MORE THAN ONE VERTICAL PANEL IN HEIGHT SHALL HAVE STAGGERED HORIZONTAL OR VERTICAL SPLICE JOINTS.
10. WHERE PANELS ARE APPLIED ON BOTH FACES OF A WALL AND NAIL SPACING IS LESS THAN 6"oc ON EITHER SIDE, PANEL JOINTS SHALL BE OFFSET TO FALL ON DIFFERENT FRAMING MEMBERS OR FRAMING SHALL BE 3x OR THICKER AND NAILS ON EACH SIDE SHALL BE STAGGERED.
11. ANCHOR BOLTS (AB) FOR SHEAR WALLS SHALL INCLUDE STEEL PLATE WASHERS, A MINIMUM OF 0.229 INCH BY 3 INCHES SQUARE IN SIZE, BETWEEN THE SILL PLATE AND NUT. THE HOLE IN THE PLATE WASHER IS PERMITTED TO BE DIAGONALLY SLOTTED WITH A WIDTH OF UP TO ⅜" LARGER THAN THE AB DIAMETER AND A SLOT LENGTH NOT TO EXCEED 1¾", PROVIDED A STANDARD CUT WASHER IS PLACED BETWEEN THE PLATE WASHER AND THE NUT. PLATE WASHER TO EXTEND WITHIN ½" OF SHEAR WALL SHEATHING UNO. PROVIDE OVERSIZED PLATE WASHER OR OFFSET AB AS REQUIRED. AT DOUBLE-SIDED SHEAR WALLS, STAGGER AB AS REQUIRED. AB TO BE PLACED A MINIMUM OF 4½" AND A MAXIMUM OF 12" FROM ENDS OF ALL SILL PLATES AND AT NOTCHES IN SILL PLATES.
12. NO OPENINGS ARE ALLOWED IN SHEAR WALLS UNLESS SHOWN ON THE STRUCTURAL PLANS. OPENINGS NOTED ARE PER **6/S-1.2** COORDINATE ANY OPENINGS NOT SHOWN WITH THE STRUCTURAL ENGINEER.
13. NO PIPES OR CONDUITS THRU SILL PLATES SHALL BE WITHIN 12" OF HOLDOWN BOLTS. HOLES IN SILL PLATES AT SHEAR WALLS SHALL BE PER **4/S-1.3** NOTIFY THE STRUCTURAL ENGINEER PRIOR TO ANY INSTALLATION NOT CONFORMING TO THESE DETAILS.

WOOD STUD SHEAR WALL SCHEDULE

SW	APA RATED SHEATHING	NAILING (PEN)	ANCHORAGE ½"ø BOLT FDN		REMARKS
			2x SILL	3x SILL	
(A)	15/32 " (32/16) EXP 1	10d @ 6"oc	32"oc	48"oc	
(B)	15/32 " (32/16) EXP 1	10d @ 4"oc	24"oc	32"oc	3x MIN AT ALL ADJOINING PANEL EDGES
(C)	15/32 " (32/16) EXP 1	10d @ 3"oc	16"oc	24"oc	

F MANUFACTURED I-JOISTS NOTES AND DESIGN CRITERIA

1. IJ = BUILT-UP "I" SHAPED WOOD JOIST WITH PLYWOOD OR OSB WEB. SEE PROJECT SPECIFICATIONS FOR MINIMUM LUMBER AND SHEATHING GRADES AND OTHER INFORMATION.
2. BEARING WALLS ARE AS SHOWN ON THE PLANS. SEE ARCHITECTURAL DRAWINGS FOR DIMENSIONS.
3. JOISTS ARE PER PLAN. HANGER SIZE TO BE CORRECT FULL SIZE FOR JOIST SIZE.
4. FRAMING FOR SPECIAL LOADING CONDITIONS HAS BEEN DESIGNED BY ZFA. ALTERNATE FRAMING CAN BE SUBMITTED FOR SUBSTITUTION REVIEW AS AN EXTRA SERVICES ITEM. CONTRACTOR SHALL BE RESPONSIBLE FOR COST OF INVESTIGATING AND REVIEWING THE ADEQUACY AND/OR ACCEPTABILITY OF SUCH SUBSTITUTION, INCLUDING ANY REQUIRED REVISIONS TO DRAWINGS AND SPECIFICATIONS.
5. IJ SHALL BE INSTALLED PER MANUFACTURER'S SPECIFICATIONS. WEB STIFFENERS SHALL BE INSTALLED PER IJ AND JOIST HANGER MANUFACTURER'S REQUIREMENTS.
6. PROVIDE BRIDGING (OR FULL DEPTH BLOCKING) @ 8'-0"oc. SEE BRIDGING DETAIL **2/S-1.2** .

I-JOIST SCHEDULE

DEPTH	MANUFACTURER* & MODEL	SIMPSON HANGER
20"	REDBUILT RED-I90	BA
	WEYERHAEUSER TJI 560D	

* REDBUILT ICC ESR-2994
WEYERHAEUSER ICC ESR-1153

D WOOD FRAMING NOTES

1. HEADERS, BEAMS, POSTS, TOP PLATE SPLICES, AND ETC., ARE PER **1/S-1.2** AND **3/S-1.2** WHERE NOT NOTED ON PLAN AND DETAILS. WALLS AT SEISMIC SEPARATIONS SHALL BE CONSIDERED EXTERIOR WALLS.
2. ALL BEAMS AND JOISTS (EXCLUDING I JOISTS) SHALL BE SEAT CUT FOR FULL UNIFORM BEARING AT SUPPORTS, INCLUDING BEAM SEATS AND COLUMN CAPS.
3. THE GENERAL CONTRACTOR SHALL MEASURE GLULAM BEAM SIZES AND CAMBERS AS DELIVERED TO THE JOB SITE AND SHALL REPORT FINDINGS TO THE ENGINEER PRIOR TO ERECTION. PROVIDE 5,000 FT. RADIUS CAMBER ON ALL SIMPLE SPAN GLULAM BEAMS UNO. WHERE INDICATED ON PLAN, C = ¾" INDICATES MIDSPAN CAMBER IN INCHES.
4. 3½" AND 5½" WIDTHS MAY BE SUBSTITUTED FOR 3⅛" & 5⅛" WIDTHS, RESPECTIVELY, AT INDUSTRIAL APPEARANCE GRADE GLULAM MEMBERS UNO.
5. SEE **11/S-1.2** FOR SHEATHING NAILING REQUIREMENTS. ALL NAILING NOT NOTED OR DETAILED OTHERWISE SHALL BE PER **10/S-1.2** NAIL LENGTH TO BE SUFFICIENT TO MEET CBC PENETRATION REQUIREMENTS.
6. EXTERIOR STUD WALL SHALL BE 2x6 @ 16"oc UNLESS NOTED OTHERWISE. INTERIOR BEARING WALLS AND SHEAR WALLS SHALL BE 2x6 @ 16"oc UNLESS NOTED OTHERWISE. SEE ARCHITECTURAL DRAWINGS FOR OTHER INTERIOR WALL FRAMING SIZES. COORDINATE STUD AND PLATE SIZES WITH THE REQUIREMENTS OF THE SHEAR WALL SCHEDULE.STUDS ADJACENT TO SEISMIC SEPARATIONS ARE TO BE 2x6 @ 16"oc UNLESS NOTED OTHERWISE.
7. WOOD POST SIZES ARE TO MATCH BEAM AND STUD WIDTH, UNO. WHERE POST OCCURS ABOVE RAISED FLOOR, PROVIDE SOLID BLOCKING AT FLOOR FRAMING TO MATCH WIDTH OF POST. PEN PER **E/S-0.1** TO POSTS AT ALL EXTERIOR WALLS AND INTERIOR SHEAR WALLS. POSTS AT HOLDOWNS TO BE FULL HEIGHT AND PER **8/S-1.2** .
8. FOR ROOF DRAINAGE, TOP OF FRAMING BETWEEN NOTED POINTS IS A STRAIGHT LINE.
9. ALL MECHANICAL SUPPLY AND RETURN OPENINGS TO BE BETWEEN FRAMING UNO.
10. HSS OR PIPE COLUMNS IN STUD WALLS ARE TO BE TRIMMED PER **5/S-1.3** . REFER TO PLANS AND DETAILS FOR OTHER REQUIREMENTS.
11. JOISTS AND RAFTERS ARE PER PLAN, WITH "HU" HANGERS (SKEWED AND/OR SLOPED AS REQUIRED) AT FLUSH FRAMING UNO. HANGER SIZE TO BE CORRECT FULL SIZE FOR JOIST SIZE (I.E. HU210 FOR 2x10). HANGERS FOR SAWN BEAMS TO BE HUS. HANGERS FOR GLULAM BEAMS TO BE HGUS, UNO.
12. ROUND HOLES IN STEEL PLATES TO BE 1/16" OVERSIZE. SLOTTED HOLES IN STEEL PLATES SHALL BE 1/16" WIDER THAN THE BOLT DIAMETER AND HAVE A LENGTH OF 2 TIMES THE BOLT DIAMETER. THE DIRECTION OF THE SLOTTED LENGTH IS INDICATED ON THE DETAILS (VSH OR HSH). INSTALL BOLT AT THE CENTER LINE OF THE HOLE. BOLT HOLES IN WOOD SHALL BE ROUND AND 1/16" OVERSIZE. CUT OFF BOLT THREADED END FLUSH WITH NUT WHEN REQUIRED BY FINISHES AND 1" MAXIMUM FROM NUT OTHERWISE. PROVIDE STANDARD CUT WASHERS UNDER HEAD AND NUT WHERE BOLT BEARS ON WOOD. USE PLATE OR MALLEABLE IRON WASHERS AT EXPOSED CONDITIONS OR AS INDICATED.
13. ALL BOLTED OR NAILED STRAP CONNECTIONS SHALL HAVE AN EQUAL NUMBER OF BOLTS OR NAILS EACH SIDE OF THE SPLICE JOINT. THE FIRST BOLT OR NAIL FROM EACH SIDE OF THE SPLICED OR STRAPPED MEMBER SHALL BE EQUIDISTANT FROM THE SPLICE. STRAPS USING 16d NAILS ON 2x MATERIAL TO BE INSTALLED ON THE 1½" EDGE OF THE MEMBER.
14. THE CONTRACTOR SHALL VERIFY THAT THE MOISTURE CONTENT OF ALL FRAMING LUMBER AND SHEATHING MEET THE REQUIREMENTS OF THE SPECIFICATIONS AT THE TIME OF INSTALLATION AND AT CLOSE-IN. THE CONTRACTOR SHALL PROVIDE ALLOWANCE FOR DIFFERENTIAL SHRINKAGE BETWEEN FLOORS, ETC.
15. VENTING IS REQUIRED IN ENCLOSED FRAMING AREAS, SAD. DRILL BLOCKING AND LEDGERS AND PROVIDE SKIP BLOCKING AS DETAILED, SAD & 12/A-9.13 UNO.
16. SAD FOR CEILING INFO. WHERE REQUIRED PROVIDE CEILING JOISTS PER **3/S-1.3**, UNO.
17. ALL SHEATHING SHALL HAVE 1/8" GAP AT ALL EDGES AND JOINTS. TYPICAL.
    A. SHEATHING AT WOOD FRAMING IS 15/32 " T&G APA RATED SHEATHING (40/20) EXP 1 WITH 10d @ 4"oc EDGES (PEN) AND 12"oc FIELD UNO ON PLANS. LAY PERPENDICULAR TO FRAMING MEMBERS. BLOCK EDGES WITH 2x4 LAID FLAT. NO PANELS LESS THAN 24" WIDE SHALL BE USED. STAGGER SHEETS.

Not found

SHEET INDEX

S-0.1	GENERAL NOTES
S-0.2	GENERAL NOTES & TYPICAL CONCRETE DETAIL
S-1.1	TYPICAL CONCRETE DETAILS
S-1.2	TYPICAL WOOD DETAILS
S-1.3	TYPICAL WOOD DETAILS
S-1.4	TYPICAL METAL STUD ELEV & CONNECTION DETAILS
S-1.5	TYPICAL METAL STUD CONNECTION DETAILS
S-1.6	TYPICAL METAL STUD SOFFIT & MISCELLANEOUS DETAILS
S-1.7	TYPICAL METAL DECKING DETAILS
S-A2.1	BLDG A FOUNDATION PLAN
S-A2.2	BLDG A CONTROL ROOM FRAMING PLAN
S-A2.3	BLDG A TECH LEDGE/CATWALK AND LOW ROOF FRAMING PLAN
S-A2.4	BLDG A LOBBY ROOF FRAMING PLAN
S-A2.5	BLDG A ROOF FRAMING PLAN
S-A3.1	BLDG A FRAME ELEVATIONS
S-A3.2	BLDG A FRAME ELEVATIONS
S-A3.3	TRUSS ELEVATION AND DETAILS
S-B2.1	BLDG B FOUNDATION
S-B2.2	BLDG B ROOF FRAMING PLAN
S-4.1	FOUNDATION DETAILS
S-4.2	FOUNDATION DETAILS
S-4.3	FOUNDATION DETAILS
S-5.1	STEEL FRAMING DETAILS
S-5.2	STEEL FRAMING DETAILS
S-5.3	STEEL BRACED FRAME DETAILS
S-5.4	STEEL BRACED FRAME & FRAMING DETAILS
S-5.5	BEARING COLD FORMED STEEL AND STEEL DETAILS
S-5.6	COLD FORMED STEEL DETAILS
S-5.7	CATWALK AND PROSCENIUM DETAILS
S-5.8	STEEL STAIR DETAILS
S-5.9	COLD FORMED STEEL DETAILS
S-6.1	WOOD DETAILS
S-6.2	STRUCTURAL DETAILS
S-7.1	RAIN CANOPY DETAILS

C FOUNDATION NOTES

1. FOUNDATION DESIGN PRESSURES ARE:

   SHALLOW FOOTINGS:
   DEAD LOAD + LIVE LOAD = 3,000 PSF
   DEAD LOAD + LIVE LOAD + LATERAL = 3,000 PSF (BLDG A), 2,400 PSF (BLDG B)
2. ALL SOILS WORK SHALL BE DONE IN ACCORDANCE WITH THE SPECIFICATIONS, THE REQUIREMENTS OF THE GEOTECHNICAL REPORT NOTED BELOW AND CHAPTER 18A OF THE CBC, TITLE 24, PART 2. ALL FOUNDATIONS SHALL BEAR ON FIRM, UNDISTURBED, NATIVE SOILS OR ENGINEERED FILL AT OR EXCEEDING DEPTHS SHOWN ON THE DRAWINGS. ENGINEERED FILL TO BE COMPACTED PER GEOTECHNICAL REPORT. INCREASE FILL AND OR FOOTING DEPTH AS REQUIRED BY GEOTECHNICAL ENGINEER. ALL FOOTING EXCAVATIONS SHALL BE AS NEAT AS PRACTICABLE. OVER-EXCAVATIONS IN WIDTH SHALL BE FILLED WITH CONCRETE, AND IN DEPTH MAY BE FILLED WITH LEAN CONCRETE OR COMPACTED APPROVED BACKFILL. ALL LOOSE SOILS SHALL BE REMOVED FROM EXCAVATIONS PRIOR TO PLACEMENT OF REINFORCING OR CONCRETE. ALL UNFORMED FOUNDATIONS SHALL BE EXCAVATED AND FORMED PER **17/S-1.1** . GEOTECHNICAL REPORT BY:

   GEOSPHERE CONSULTANTS, INC
   REPORT NO. 91-04390-A
   DATED: OCT 12, 2018
3. WHERE BOTTOM OF ADJACENT FOOTINGS ARE DIFFERENT PROVIDE STEPPED FOOTING PER **5/S-1.1** .
4. USE 5/8" DIAMETER x 12" (18" AT CURBS) ANCHOR BOLTS (AB) AT 48"oc WHERE NOT OTHERWISE NOTED. MINIMUM EMBEDMENT INTO CONCRETE IS 7" (EXCLUDING CURB) UNLESS DETAILED OTHERWISE. ANCHOR BOLTS ARE TO BE TIED IN PLACE PRIOR TO PLACEMENT OF CONCRETE. SEE SHEAR WALL SCHEDULE FOR ADDITIONAL REQUIREMENTS. MINIMUM TWO ANCHOR BOLTS PER SILL PIECE.
5. TYPICAL SLAB: 5" CONCRETE REINFORCED WITH #4 @ 16"oc EACH WAY LOCATED 1½" CLEAR FROM TOP OF SLAB OVER VAPOR RETARDER (PER SPECIFICATIONS) AND 6" MINIMUM FREE DRAINING COMPACTED ROCK PER SPECIFICATIONS ON SUBGRADE PER THE GEOTECHNICAL RECOMMENDATIONS, AND AS APPROVED BY THE GEOTECHNICAL ENGINEER. DO NOT DRIVE CONCRETE TRUCKS OR LARGE SCREED MACHINES ON VAPOR BARRIER WITHOUT ADDITIONAL BUFFER MATERIAL AND APPROVAL FROM THE STRUCTURAL ENGINEER.
6. REFER TO ARCHITECTURAL AND PLUMBING DRAWINGS FOR DEPRESSED SLABS FOR ARCHITECTURAL FLOORING OR INSERTS, SLOPED SLABS TO DRAIN AND PIPES OR CONDUITS AT SLAB. SEE **8/S-1.1** & **9/S-1.1** AT DEPRESSED SLAB & **7/S-1.1** FOR PIPES AND CONDUITS.
7. PROVIDE CONTROL JOINTS PER **6/S-1.1** (OR CONSTRUCTION/DOWEL JOINTS AT CONTRACTOR'S OPTION) AS SHOWN ON PLAN AND AS REQUIRED TO MEET A MAXIMUM SPACING IN FEET OF 3 TIMES THE SLAB DEPTH IN INCHES (FOR EXAMPLE 3x4" = 12'-0"oc MAX). PROVIDE CONSTRUCTION/DOWEL JOINTS PER **6/S-1.1** AS SHOWN ON PLAN, BUT NOT GREATER THAN 60'-0"oc EACH WAY. INSTALL JOINTS TO DIVIDE SLAB INTO RECTANGULAR AREAS WITH LONG DIMENSION LESS THAN 1.5 x SHORT DIMENSION. INSTALL JOINTS AT FACE OF STUDS OF WALL WHERE POSSIBLE. SUBMIT JOINT LAYOUT PLAN FOR REVIEW PRIOR TO PLACEMENT.
8. TOP OF FOOTING ELEVATIONS TO BE DETERMINED BY THE CONTRACTOR BASED ON INFORMATION FROM THE CIVIL DRAWINGS, GEOTECHNICAL REPORT, LANDSCAPE, ETC.
9. EXTERIOR WALLS TO HAVE MINIMUM 6" TALL CURB. SAD FOR CURB CONFIGURATION. INTERIOR WALLS AT TOILET ROOM TO HAVE MINIMUM 6" TALL CURB, UNO.

ABBREVIATIONS

AB	ANCHOR BOLT	GB	GRADE BEAM	PTDF	PRESSURE TREATED DOUGLAS FIR
ABV	ABOVE	GLB	GLUE LAMINATED BEAM	PT	POINT
AC	AIR CONDITIONING	GR	GRADE	R	RADIUS
ADJ	ADJACENT	HD	HOLD DOWN	RBS	REDUCED BEAM SECTION
ADDL	ADDITIONAL	HDG	HOT-DIP GALVANIZED	RFTR	RAFTER
ALT	ALTERNATE	HDR	HEADER	REF	REFERENCE
ALUM	ALUMINUM	HGR	HANGER	REINF	REINFORCING
ARCH	ARCHITECT	HK	HOOK	REQD	REQUIRED
@	AT	HORIZ	HORIZONTAL	RET	RETAINING
BLDG	BUILDING	HS	HIGH STRENGTH	REV	REVISION
BLK/BLKG	BLOCK/BLOCKING	HSB	HIGH STRENGTH BOLT	RF	ROOF
BLW	BELOW	HSFB	HIGH STRENGTH FRICTION BOLT	RWD	REDWOOD
BM	BEAM	HSG	HIGH STRENGTH GROUT	S	AMERICAN STANDARD BEAM
BN	BOUNDARY NAIL	HSH	HORIZONTAL SLOTTED HOLE	SAD	SEE ARCHITECTURAL DRAWINGS
BOT	BOTTOM	HSS	HOLLOW STRUCTURAL SECTION	SB	SOLID BLOCK
BRG	BEARING	HT	HEIGHT	SC	SLIP CRITICAL
BTWN	BETWEEN	ID	INSIDE DIAMETER	SCBF	SPECIAL CONCENTRIC BRACED FRAME
BU	BUILT-UP	IJ	I SHAPED WOOD BUILT UP TRUSS	SCD	SEE CIVIL DRAWINGS
BYND	BEYOND	INT	INTERIOR	SCHED	SCHEDULE
C	AMERICAN STANDARD CHANNEL	JST	JOIST	SED	SEE ELECTRICAL DRAWINGS
CANT	CANTILEVER	JT	JOINT	SEOR	STRUCTURAL ENGINEER OF RECORD
CB	CARRIAGE BOLT	KP	KING POST	SFRS	SEISMIC FORCE RESISTING SYSTEM
CIP	CAST IN PLACE	L	STEEL ANGLE	SHTG	SHEATHING
CGL	CERTIFIED GLUED LUMBER	Lb or #	POUND(s)	SIM	SIMILAR
CJ	CONTROL JOINT	LGMF	LIGHT GAGE METAL FRAMING	SKYLT	SKYLIGHT
℄	CENTERLINE	LGMFC	LIGHT GAGE METAL FRAMING CONTRACTOR	SMF	SPECIAL MOMENT FRAME
CJP	COMPLETE JOINT PENETRATION	LL	LIVE LOAD	SMS	SHEET METAL SCREW
CLG	CEILING	LLH	LONG LEG HORIZONTAL	SMD	SEE MECHANICAL DRAWINGS
CLR	CLEAR	LLV	LONG LEG VERTICAL	SOG	SLAB ON GRADE
COL	COLUMN	LOC	LOCATION	SPCG	SPACING
COLL	COLLECTOR	LS	LAG SCREW	SPD	SEE PLUMBING DRAWINGS
CONC	CONCRETE	LSL	LAMINATED STRAND LUMBER	SPEC	SPECIFICATION
CONN	CONNECTION	LVL	LAMINATED VENEER LUMBER	SQ	SQUARE
CONT	CONTINUOUS	MAX	MAXIMUM	SS	SELECT STRUCTURAL or STAINLESS STEEL
COORD	COORDINATE/ COORDINATION	MB	MACHINE BOLT	STGR	STAGGERED
CMU	CONCRETE MASONRY UNIT	MBM	METAL BUILDING MANUFACTURER	STD	STANDARD
CSK	COUNTERSINK	MC	MISCELLANEOUS CHANNEL	STIFF	STIFFENER
CW	CUT WASHER	MECH	MECHANICAL	STL	STEEL
DBA	DEFORMED BAR ANCHOR	MEZZ	MEZZANINE	STRUCT	STRUCTURAL
DBL	DOUBLE	MF	MOMENT FRAME	SW	SHEAR WALL
DCW	DEMAND CRITICAL WELD	MFR	MANUFACTURER	SYM	SYMMETRICAL
DF	DOUGLAS FIR	MIN	MINIMUM	T&B	TOP AND BOTTOM
DIA or ø	DIAMETER	MISC	MISCELLANEOUS	T&G	TONGUE AND GROOVE
DIAG	DIAGONAL	MW	MALLEABLE IRON WASHER	THK	THICK
DIM	DIMENSION	MTL	METAL	THRD	THREADED
DJ	DOWEL JOINT	(N)	NEW	THRU	THROUGH
DL	DEAD LOAD	NIC	NOT IN CONTRACT	TL	TOTAL LOAD
DN	DOWN	NO or #	NUMBER	TN	TOE NAIL
DO	DITTO	NS	NEAR SIDE	TOC	TOP OF CONCRETE
DWG	DRAWING	NSG	NON-SHRINK GROUT	TOF	TOP OF FRAMING
DWL	DOWEL	NTS	NOT TO SCALE	TOM	TOP OF MASONRY
EA	EACH	OC	OVER	TOP	TOP OF PLYWOOD
EE	EACH END	oc	ON CENTER	TOS	TOP OF STEEL
EF	EACH FACE	OD	OUTSIDE DIAMETER	TOT	TOTAL
ELEC	ELECTRICAL	OH	OPPOSITE HAND	TU	TILT UP
ELEV	ELEVATOR/ELEVATION	OPNG	OPENING	TYP	TYPICAL
EMBED	EMBEDMENT	OPP	OPPOSITE	UNO	UNLESS NOTED OTHERWISE
EQ	EQUAL	OVS	OVERSIZED	VERT	VERTICAL
EQUIP	EQUIPMENT	OW	OTHERWISE	VIF	VERIFY IN FIELD
ES	EACH SIDE	OWT	OPEN WEB TRUSS	VSH	VERTICAL SLOTTED HOLE
EW	EACH WAY	℘	PLATE or PROPERTY LINE	W	WIDE FLANGE STEEL BEAM
EXIST or (E)	EXISTING	PA	POST ABOVE	W/	WITH
EXP	EXPANSION	PDP	POWDER DRIVEN PINS	WO	WITHOUT
EXT	EXTERIOR	PDN	PANEL EDGE NAIL	WD	WOOD
FDN	FOUNDATION	PERP	PERPENDICULAR	WHS	WELDED HEADED STUD
FIN	FINISH	PES	PANEL EDGE SCREWS	WLD	WELDED
FG	FINISH GRADE	PJP	PARTIAL JOINT PENETRATION	WP	WORK POINT/WATERPROOF
FLI	FERRULE LOOP INSERT	PLF	POUNDS PER LINEAR FOOT	WS	WOOD SCREW
FLR	FLOOR	PNL	PANEL	WT	WEIGHT
FN	FACE NAIL	PSF	POUNDS PER SQUARE FOOT	WTS	WELDED THREADED STUD
FO	FACE OF	PSI	POUNDS PER SQUARE INCH	WWR	WELDED WIRE REINFORCEMENT
FOC	FACE OF CONCRETE	PSL	PARALLEL STRAND LUMBER		
FOM	FACE OF MASONRY	PTB	PANEL TIE BAR		
FOS	FACE OF STUD				
FRMG	FRAMING				
FS	FAR SIDE				
FTG	FOOTING				
GA	GAGE or GAUGE				
GALV	GALVANIZED				

A DESIGN CRITERIA

DESIGN CRITERIA: 2016 CALIFORNIA CODE OF REGULATIONS, TITLE 24, PART 2 (CBC)

FLOOR LIVE LOAD: 50 PSF (REDUCIBLE) (CONTROL BOOTH AND TECH LEDGE)
40 PSF (REDUCIBLE) (CATWALKS) 25 PSF (TENSION GRID) 25 PLF (DEAD HUNG PIPE)
250 PLF HORIZ & VERT (LOFTBLOCK & HEADBLOCK) 1000# HORIZ & VERT (MULEBLOCK)

ROOF LIVE LOAD: 20 PSF (REDUCIBLE)

FUTURE SOLAR: 3 PSF

THEATRE LOAD: SEE PRODUCTION RIGGING DRAWINGS

RISK CATEGORY: III (AT BLDG A)
II (AT BLDG B)

WIND DATA: ULTIMATE WIND SPEED (3 SEC GUST) IN MPH: 115 (AT BLDG A)
110 (AT BLDG B)
WIND EXPOSURE: C
INTERNAL WIND PRESSURE COEFFICIENT (GCPI) = ±0.18
COMPONENTS AND CLADDING DESIGN PRESSURES FOR SYSTEMS DESIGNED BY OTHERS SHALL COMPLY WITH THE "ASCE 7" DESIGN STANDARD

EARTHQUAKE DATA: SEISMIC IMPORTANCE FACTOR, I_e = 1.25 (AT BLDG A)
1.00 (AT BLDG B)
MAPPED SPECTRAL RESPONSE ACCELERATIONS: S_s = 1.50; S_1 = 0.51
SITE CLASS: D
SPECTRAL RESPONSE COEFFICIENTS: S_{DS} = 1.00; S_{D1} = 0.51
SEISMIC DESIGN CATEGORY: D
SEISMIC FORCE RESISTING SYSTEMS: STEEL SPECIAL CONCENTRICALLY BRACED FRAMES (MAIN SYSTEM AT BLDG A)
COLD FORMED STEEL FRAMED SHEAR WALLS WITH STRUCTURAL PANELS RATED FOR SHEAR RESISTANCE (TECH LEDGE AT BLDG A)
STEEL SPECIAL CANTILEVER COLUMN (ENTRY CANOPY AT BLDG A)WOOD FRAMED SHEAR WALLS (AT BLDG B)
RESPONSE MODIFICATION FACTORS: R = 6.0 (BLDG A), 2.5 (ENTRY CANOPY)
6.5 (BLDG B)
OVERSTRENGTH FACTOR, Ω_o: = 2.0 (BLDG A), 1.25 (ENTRY CANOPY)
2.5 (BLDG B)
DEFLECTION AMPLIFICATION FACTOR: C_d = 5.0 (BLDG A), 2.5 (ENTRY CANOPY)
4.0 (BLDG B)
REDUNDANCY FACTOR, ρ: = 1.0 (BLDG A PAC) 1.3 (BLDG A CHORAL)
1.0 (BLDG B)
DESIGN BASE SHEARS: 215 k (BLDG A PAC), 47 k (BLDG A CHORAL)
4 k (ENTRY CANOPY), 21 k (ASD) (BLDG B)
SEISMIC RESPONSE COEFFICIENT(S), C_s = 0.21 (BLDG A) 0.50 (ENTRY CANOPY)
0.11 (ASD) (BLDG B)

ANALYSIS PROCEDURE USED: EQUIVALENT LATERAL FORCE

IREEGULARITIES: NONPARALLEL LATERAL SYSTEM (ALL), REENTERANT CORNER (AT BLDG A CORAL CLASSROOM & BLDG B)

MAXIMUM ANTICIPATED STORY DRIFT = 0.015 X HEIGHT
PROVIDE DEFORMATION COMPATIBILITY PER ASCE 7 SECTION 13.3.2 FOR NON-STRUCTURAL ITEMS, INCLUDING CLADDING, STAIRS, GLAZING, ETC.

SCOPE: NEW STEEL FRAMED PERFORMING ARTS CENTER (BLDG A) WITH SEISMICALLY SEPERATE CHORAL CLASSROOM SPACE (BLDG A) AND SEPERATE CTE BUILDING (BLDG B). PERFORMING ARTS CENTER AND CHORAL CLASSROOM ARE STRUCTURAL STEEL FRAMED WITH METAL STUD WALLS. TECH LEVELS WITHIN PERFORMING ARTS CENTER (BLDG A) ARE COLD FORMED STEEL FLOOR FRAMED WITH METAL STUD FRAMED SHEAR WALLS. CTE BUILDING IS WOOD FRAMED.

B GENERAL NOTES

1. REFER TO SHEETS **S-1.1** THRU **S-1.7** FOR STANDARD DETAILS OF CONSTRUCTION. REFER TO THE PROJECT SPECIFICATIONS FOR MATERIALS AND METHODS.
2. BUILDING DIMENSIONS SHOWN ARE FOR GENERAL REFERENCE ONLY. SEE ARCHITECTURAL DRAWINGS (SAD) FOR ALL ACTUAL BUILDING DIMENSIONS. ANY DISCREPANCIES ARE TO BE BROUGHT TO THE ATTENTION OF THE ARCHITECT/ENGINEER SO CLARIFICATION CAN BE MADE PRIOR TO COMMENCING WORK.
3. STRUCTURAL DRAWINGS SHALL NOT BE SCALED. ALL DIMENSIONS AND FIT SHALL BE DETERMINED AND VERIFIED BY THE CONTRACTOR PRIOR TO COMMENCING WORK.
4. DETAILS NOT FULLY OR SPECIFICALLY SHOWN SHALL BE OF SAME NATURE AS OTHER SIMILAR CONDITIONS.
5. REFER TO ARCHITECTURAL DRAWINGS FOR SIDEWALK SLABS AND DIMENSIONS.
6. COORDINATION OF MECHANICAL, ELECTRICAL, PLUMBING, AND SITE UTILITY SYSTEMS WITH THE STRUCTURAL SYSTEM IS THE RESPONSIBILITY OF THE GENERAL CONTRACTOR. USE DETAILS **2/S-1.1** **3/S-1.1** **7/S-1.1** **2/S-1.2** **5/S-1.2** AND **6/S-1.2** . AT CONDITIONS WHERE THESE DETAILS DO NOT APPEAR TO APPLY, NOTIFY THE STRUCTURAL ENGINEER PRIOR TO INSTALLATION. AT CONDITIONS WHERE FIELD MODIFICATIONS OF MECHANICAL, ELECTRICAL, PLUMBING, OR SITE UTILITIES AFFECT STRUCTURAL SYSTEMS, NOTIFY STRUCTURAL ENGINEER PRIOR TO INSTALLATION.
7. VERIFY WEIGHTS AND LOCATIONS OF MECHANICAL UNITS WITH MECHANICAL ENGINEER PRIOR TO PLACEMENT. UNITS VARYING OVER 5% IN WEIGHT SHALL BE REVIEWED BY THE STRUCTURAL ENGINEER PRIOR TO INSTALLATION (MECHANICAL WEIGHTS SHOWN ARE MAXIMUM). CONTRACTOR TO VERIFY MECHANICAL UNIT SIZES AND WEIGHTS AS INSTALLED PRIOR TO INSTALLATION OF SPECIAL FRAMING TO ENSURE CORRECT PLACEMENT UNDER CURBS, ETC. SEE **12/S-1.7** .
8. SHORING AND BRACING DESIGN, MATERIALS AND INSTALLATION SHALL BE PROVIDED BY THE GENERAL CONTRACTOR, AND SHALL BE ADEQUATE FOR ALL LOADS. LEAVE IN PLACE AS LONG AS MAY BE REQUIRED FOR SAFETY AND UNTIL FINAL STRUCTURAL CONSTRUCTION IS COMPLETED. THE CONTRACTOR SHALL ENGAGE A LICENSED CIVIL OR STRUCTURAL ENGINEER TO PROVIDE SHORING.
9. SPECIAL INSPECTIONS ARE REQUIRED PER THE TESTING AND INSPECTION FORM, SEE SPECIFICATIONS.
10. VEHICULAR TRAFFIC, HEAVY EQUIPMENT AND MATERIAL STAGING SHALL NOT BE ALLOWED ADJACENT TO ANY RETAINING/BASEMENT WALL, NEW OR EXISTING WITHIN A HORIZONTAL DISTANCE EQUAL TO THE WALL HEIGHT MEASURED FROM THE BOTTOM OF FOOTING OR 5'-0" WHICHEVER IS GREATER, UNLESS APPROVED BY THE STRUCTURAL ENGINEER OR NOTED OTHERWISE. WITHIN THIS ZONE, ONLY HAND-OPERATED EQUIPMENT ("WHACKERS", VIBRATORY PLATES, OR PNEUMATIC COMPACTORS) SHALL BE USED TO COMPACT THE BACKFILL SOILS.
11. SITE REVIEWS BY ZFA ARE REQUIRED FOR THE FOLLOWING UNLESS DIRECTED OTHERWISE:

    * REINFORCING STEEL SPECIFIED BY STRUCTURAL DRAWINGS
    * STRUCTURAL WOOD FRAMING
    * STRUCTURAL COLD FORMED STEEL FRAMING
    * SFRS STEEL ERECTION

    NOTIFY ZFA AT LEAST 2 WORKING DAYS PRIOR TO COMPLETION OF WORK.
12. SUBMIT ENGINEERING OF ITEMS TO ARCHITECT/ENGINEER FOR REVIEW PRIOR TO FABRICATION. SAD AND SPECIFICATIONS FOR THE REQUIREMENTS. G

CARBON STL EXPANSION ANCHORS IN 2500 PSI MIN CONC						
ANCHOR TYPE	ANCHOR & PILOT HOLE DIA	MIN NOMINAL EMBED H_{nom}	MIN EDGE DISTANCE C_{min}	MIN SPCG S_{min}	MIN CONC THICKNESS H_{min}	INSTALL TORQUE (FT-LB)
SIMPSON STRONG-BOLT 2 (ICC-ESR 3037)	⅜"	1⅛"	6"	3"	3¼"	30
	½"	2¾"	7"	7"	4½"	60
	⅝"	3⅜"	6½"	5"	5½"	90
	¾"	4⅛"	6½"	8"	6¾"	150
	1"	5¼"	8"	8"	9"	230
HILTI KWIK BOLT TZ (ICC-ESR 1917)	⅜"	2⅜"	2½"	5"	4"	25
	½"	2⅜"	2½"	5¾"	4"	40
	⅝"	3⅜"	3⅜"	6¼"	5"	60
	¾"	4⅜"	4¾"	10½"	6"	110

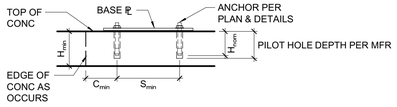

NOTES:

1. INSTALL EXPANSION ANCHORS PER MANUFACTURER'S INFORMATION AND ICC REPORT INSTRUCTIONS. SPECIAL INSPECTION IS REQUIRED PER SECTION 1705A AND THE REQUIREMENTS OF THE ICC REPORTS.
2. CONTRACTOR TO VERIFY MINIMUM EDGE DISTANCES, SPACING AND THICKNESS ARE IN ACCORDANCE W/ SCHEDULE PRIOR TO INSTALLING ANCHOR.
3. WHEN INSTALLING DRILLED-IN ANCHORS IN EXISTING REINFORCED CONCRETE, USE CARE AND CAUTION TO AVOID CUTTING OR DAMAGING THE EXISTING REINFORCING BARS. MAINTAIN A REASONABLE CLEARANCE BETWEEN REINFORCEMENT AND THE DRILLED-IN ANCHOR. FILL ABANDONED HOLES W/ HIGH STRENGTH GROUT.
4. THE SPECIAL INSPECTOR MUST BE ON THE JOBSITE PERIODICALLY DURING ANCHOR INSTALLATION TO VERIFY ANCHOR TYPE, ANCHOR DIMENSIONS, HOLE CLEANLINESS, EMBEDMENT DEPTH, CONCRETE TYPE, CONCRETE COMPRESSIVE STRENGTH, DRILL BIT DIAMETER, HOLE DEPTH, EDGE DISTANCE(S), ANCHOR SPACING(S), CONCRETE THICKNESS, AND TIGHTENING TORQUE.
5. TEST ANCHORS IN ACCORDANCE W/ CBC SECTION 1910A.5.

1 EXPANSION ANCHOR IN CONCRETE

3/4" = 1'-0"

I COLD-FORMED STEEL FRAMING NOTES

1. SEE PLANS, DETAILS, AND ARCHITECTURAL DRAWINGS FOR METAL FRAMING LOCATIONS. SEE ARCHITECTURAL DRAWINGS FOR WALL WIDTHS AND CONFIGURATIONS.
2. EACH FRAMING MEMBER IS DESIGNATED BY A FOUR PART CODE INDICATING THE SIZE (BOTH DEPTH AND FLANGE WIDTH), STYLE, AND MATERIAL THICKNESS. FOR EXAMPLE, 600S162-54:

   600 - MEMBER DEPTH IN 1/100" (6")
   S - MEMBER STYLE - S=STUD, T=TRACK
   162 - FLANGE WIDTH IN 1/100" (1⅝")
   54 - MATERIAL THICKNESS IN MILS (0.054")

3. TYPICAL METAL STUDS AND FRAMING ARE PER SCHEDULE **1/S-1.4** UNO. SUBMIT SHOP AND ERECTION DRAWINGS AND MANUFACTURER'S INFORMATION SHOWING CONFORMANCE TO CRITERIA SHOWN ON DRAWINGS AND SPECIFICATIONS. MINIMUM METAL THICKNESS = 33MILS (20GA).
4. TYPICAL TRACKS ARE SAME GAUGE (MILS) AS STUD, 43 MILS MINIMUM UNO. FLANGE TO BE 1½" MIN.
5. ALL STUDS TO BE CONTINUOUS. ALL TRACKS IN HEADERS AND SILLS TO BE CONTINUOUS SINGLE-PIECE BETWEEN JAMB STUDS OR PARAPET POSTS.
6. FASTENING OF COMPONENTS SHALL BE WITH SELF-DRILLING SCREWS OR WELDING. SCREWS OR WELDS NOT SHOWN SHALL BE OF SUFFICIENT SIZE TO ENSURE THE STRENGTH OF THE CONNECTION. ALL WELDS OF GALVANIZED STEEL SHALL BE TOUCHED-UP WITH A ZINC-RICH PAINT. WIRE TYING OF COMPONENTS SHALL NOT BE PERMITTED.
7. EXPANSION ANCHOR OR SCREW ANCHOR SIZE AND EMBEDMENT ARE AS REQUIRED PER DRAWINGS. MINIMUM STEEL EDGE DISTANCE IN TRACK IS 2x ANCHOR DIAMETER AND MINIMUM SPACING IS 3x ANCHOR DIAMETER UNO. SEE EXPANSION OR SCREW ANCHOR SCHEDULE FOR CONCRETE REQUIREMENTS. FOR EXPANSION ANCHOR THROUGH METAL TRACK, USE 3" SQUARE x ¼" PLATE WASHER (OR EQUIVALENT ROUND WASHER) AT TRACK. DRILL HOLE IN PLATE WASHER FOR EXPANSION ANCHOR AS NEEDED TO ACHIEVE MINIMUM EDGE DISTANCES.
8. METAL STUDS TO BE LATERALLY BRACED WITH GYPSUM BOARD BOTH SIDES PER CBC OR BRACED AT 4'-0"oc MAXIMUM PER **1/S-1.6** .
9. TYPICAL STUD-TO-TRACK CONNECTIONS PER **7/S-1.4** UNO. MAXIMUM GAP OF ⅛" IS ALLOWED BETWEEN STUDS AND TRACK AT STANDARD WALLS. TRIM STUDS TO FULLY BEAR.
10. TYPICAL WALL INTERSECTIONS PER **4/S-1.6** UNO.
11. PROVIDE LIGHT GAUGE METAL BACKING FOR ARCHITECTURAL FINISHES AND FURNISHINGS, SAD.
12. CEILING FRAMING PER **9/S-1.6**.
13. TYPICAL PUNCHOUTS PER **2/S-1.6**.
14. PROVIDE CONNECTION PER **1/S-5.4** TYPICAL AT BRACES IN WALL.
15. WALLS AT SEISMIC SEPARATION JOINTS SHALL BE FRAMED AS EXTERIOR WALLS UNO.
16. ALL SHEATHING SHALL HAVE 1/8" GAP AT ALL EDGES AND JOINTS. TYPICAL.
    A. SHEATHING AT COLD-FORMED STEEL IS 1⅛" T&G APA RATED SHEATHING (40/20) EXP 1 WITH #8 SCREWS @ 6"oc EDGES (PES) AND 12"oc FIELD UNO ON PLAN PER **14/S-5.5**. BLOCK UNSUPPORTED EDGES WITH 3"x54 MIL STRAP. LAY PERPENDICULAR TO FRAMING MEMBERS. NO PANELS LESS THAN 24" WIDE SHALL BE USED. STAGGER SHEETS.
17. DO NOT OVERDRIVE PDP AT SHTG. PROVIDE ℄ 43 MILSx1½ AS REQURED TO NOT OVERDRIVE.

J MATERIAL DATA

(INFORMATION SHOWN IS FOR STRUCTURAL DESIGN REFERENCE ONLY. SEE THE PROJECT SPECIFICATIONS FOR ALL MATERIAL SPECIFICATIONS.)

CONCRETE 28-DAY ULTIMATE COMPRESSIVE STRENGTH:
F'_c = 3,000 PSI FOUNDATIONS
F'_c = 3,000 PSI INTERIOR SLAB ON GRADE (4,000 PSI AT 56 DAYS)
F'_c = 4,000 PSI RETAINING WALLS

REINFORCING STEEL YIELD STRENGTH (ASTM A615 UNO):
F_y = 40,000 PSI AT #3 AND SMALLER
F_y = 60,000 PSI AT #4 AND LARGER

STEEL YIELD STRENGTH (UNO):
F_y = 50,000 PSI W SHAPES (ASTM A992)
F_y = 36,000 PSI ANGLES, CHANNELS, AND PLATES (ASTM A36)
F_y = 46,000 PSI RECTANGULAR HSS (ASTM A500)
F_y = 42,000 PSI ROUND HSS (ASTM A500)
F_y = 35,000 PSI PIPES (ASTM A53)

FASTENERS:
MACHINE BOLTS SHALL BE ASTM A307
HIGH STRENGTH BOLTS SHALL BE ASTM F3125 GRADE A325 OR F1852 UNO
ANCHOR RODS SHALL BE ASTM F1554 GR 36 UNO
ARC-WELDING ELECTRODES SHALL BE E70

COLD FORMED METAL FRAMING (ASTM A1003) YIELD STRENGTH:
F_y = 33,000 PSI 33 & 43 MILS (20 & 18 GAUGE)
F_y = 50,000 PSI 54, 68, & 97 MILS (16, 14, & 12 GAUGE)

WOOD BASE DESIGN STRESSES (UNO):

SAWN LUMBER MEMBER	SPECIES AND MINIMUM GRADE, UNO	F_b (PSI)	$F_{c\perp}$ (PSI)	E (PSI)
6x POSTS	DOUGLAS FIR - #1	1200	170	$1.6x10^6$
6x BEAMS	DOUGLAS FIR - #1	1350	170	$1.6x10^6$
4x POSTS & BEAMS	DOUGLAS FIR - #1	1000	180	$1.7x10^6$
2x JOISTS, RAFTERS	DOUGLAS FIR - #1	1000	180	$1.7x10^6$
℄ MATERIAL	DOUGLAS FIR - #2	900	180	$1.6x10^6$
2x STUDS	DOUGLAS FIR - #2	900	180	$1.6x10^6$

GLUE-LAMINATED WOOD DESIGN STRESSES:
F_b = 2,400 PSI, $F_{c\perp}$ = 265 PSI FOR BEAMS (DOUGLAS FIR) (24F-V8).
F_b = 2,000 PSI, $F_{c\perp}$ = 265 PSI FOR BEAMS (ALASKAN YELLOW CEDAR) (24F-V8).

MANUFACTURED WOOD PRODUCTS (ESR-1387):
LVL (BLOCKING, JOISTS) F_b = 2,600 PSI E = $1.9x10^6$ PSI
LVL (BEAMS) F_b = 2,900 PSI E = $2.0x10^6$ PSI

FOR METAL CONNECTOR DESIGNATION REFER TO SIMPSON STRONG-TIE PER SPECIFICATIONS.

G STEEL NOTES

1. COORDINATE TOP OF FOOTING ELEVATIONS AS DETERMINED BY THE CONTRACTOR PER **C/S-0.1** NOTE #8.
2. TOP OF STEEL ELEVATIONS ARE TO BE DETERMINED BY THE CONTRACTOR BASED ON ARCHITECTURAL DRAWINGS AND STRUCTURAL DRAWINGS.
3. WHERE INDICATED ON PLAN "C" INDICATES MIDSPAN CAMBER IN INCHES.
4. ALL FRAMING AND CONNECTIONS ALONG GRID LINES OR OTHERWISE INDICATED AS (SFRS) ARE PART OF THE SEISMIC FORCE RESISTING SYSTEM. TESTING AND INSPECTION OF FRAMING AND CONNECTIONS INDICATED AS SFRS SHALL MEET ALL REQUIREMENTS OF AISC 341 AND AWS D1.8. SEE SPECIFICATIONS FOR ADDITIONAL REQUIREMENTS.
5. ALL BOLTS THAT ARE A PART OF THE SFRS ARE TO BE SLIP CRITICAL.
6. DEMAND CRITICAL WELDS ARE AS INDICATED ON PLANS, ADDITIONALLY ALL COLUMN SPLICES AND COLUMN TO BASE PLATE WELDS IN THE SFRS ARE DEMAND CRITICAL. DEMAND CRITICAL WELDS AND THE TESTING AND INSPECTION OF THEM ARE TO MEET ALL REQUIREMENTS OF AISC 341, AWS D1.1, AND AWS D1.8. SEE SPECIFICATIONS FOR ADDITIONAL REQUIREMENTS.

H COLD-FORMED STEEL FRAMING SHEAR WALL NOTES

1. PES = SURE-BOARD SHEATHING EDGE SCREWING. BLOCK ALL UNSUPPORTED EDGES WITH 16GA x 3" MIN WIDTH STRAP MATERIAL UNO.
2. FIELD SCREWING TO BE 6"oc UNO.
3. ALL SURE-BOARD SHEATHING SCREWS TO BE SELF-DRILLING/SELF-TAPPING NO. 2 PILOT POINT FLAT HEAD, S12 DRILL POINT SCREWS. THE NO. 8 SCREWS HAVE A MINIMUM DIAMETER OF 0.138 INCH, WITH A MINIMUM 0.3145 INCH HEAD DIAMETER AND 1.25 INCH MINIMUM LENGTH, AND SHALL COMPLY WITH SAE J78, ASTM C954 AND C1513.
4. SHEATHING TO BE SURE-BOARD SERIES 200 WITH ½" GYPSUM WALL BOARD CONFORMING TO IAPMO ER-0126 AND DSA A-5.
5. SHEAR WALL LENGTHS, WHERE NOTED, ARE MINIMUM. DO NOT LOCATE HOLDOWNS FROM THESE DIMENSIONS. SAD FOR ACTUAL WALL LENGTHS.
6. HD REFERS TO SIMPSON STRONG TIE CO. HOLDOWN. INSTALL PER **6/S-5.5**.
7. EDGE SCREW WALL SHEATHING TO DOUBLE STUDS WITH HOLDOWNS.
8. PORTIONS OF WALL SURFACES ADJACENT TO SPECIFIED SHEAR WALLS SHALL BE SHEATHED FOR THE FULL, UNINTERRUPTED LENGTH PER SHEAR WALL TYPE **'A'** OR WITH GYPSUM BOARD OF THE SAME THICKNESS TO PROVIDE AN EVEN WALL SURFACE FOR FINISH MATERIALS.
9. OPENINGS ARE NOT ALLOWED IN SHEAR WALLS UNLESS SHOWN ON THE STRUCTURAL PLANS. COORDINATE ANY OPENINGS NOT SHOWN WITH THE STRUCTURAL ENGINEER.
10. STUDS SHALL BE BACK TO BACK AT ALL SHEAR WALL ENDS PER **6/S-5.5**

METAL STUD SHEAR WALL SCHEDULE					
SW	SHEATHING (SURE-BOARD IAPMO ER-126)	EDGE SCREW SPACING (PES)	ANCHORAGE		REMARKS
			AT FOUNDATION ½"Ø SCREW AB	AT FRAMING	
Ⓐ	⅞" SURE-BOARD 200	#8 @ 6"oc	32"oc	(2) #8 @ 8"oc	54mil DBL STUDS AT WALL ENDS & 54mil BOT TRACK
Ⓑ	⅞" SURE-BOARD 200	#8 @ 4"oc	24"oc	(2) #8 @ 6"oc	
Ⓒ	⅞" SURE-BOARD 200 BOTH SIDES	#8 @ 6"oc	16"oc	N/A	

QUATTROCCHI KWOK ARCHITECTS
Main Office:
636 Fifth Street, Santa Rosa, CA 95404
Pleasanton Office:
600 Main Street, Suite E,
Pleasanton, CA 94566
(707) 576-0829

ZFA STRUCTURAL ENGINEERS
1212 fourth street | suite z **zfa.com**
santa rosa ca 95404 **707.526.0992**
zfa job no. 18254

copyright © 2019

REGISTERED PROFESSIONAL ENGINEER — NIKKI S. WARNKEN — No. S4613 — STRUCTURAL — STATE OF CALIFORNIA

THIS DOCUMENT AND THE IDEAS INCORPORATED HEREIN, AS AN INSTRUMENT OF PROFESSIONAL SERVICE, IS THE PROPERTY OF THE ENGINEER AND IS NOT TO BE USED, IN WHOLE OR IN PART FOR ANY OTHER PROJECT WITHOUT THE PRIOR WRITTEN AUTHORIZATION OF THE ENGINEER.

FREEDOM HIGH SCHOOL

PERFORMING ARTS AND CTE FACILITIES

1050 NEROLY RD
OAKLEY, CA 94561

LIBERTY UNION HIGH SCHOOL DISTRICT

ZFA NO: 18254
ENGR / PM: NBB / MJR / AIZ
DRAWING SCALE: As indicated
PTN: 61721-0068

BID SET

AUGUST 13, 2019

SHEET TITLE

GENERAL NOTES & TYPICAL CONCRETE DETAIL

SHEET NUMBER

S-0.2

C:\revit_local\18254_FREEDOM HS PAC_S18C_nikki@zfa.com.rvt
8/5/2019 1:49:52 PM

ADHESIVE ANCHOR IN 2500 PSI MIN CONCRETE

ADHESIVE TYPE	ANCHOR		PILOT HOLE	MIN EMBED UNO H_{ef}	MIN EDGE DISTANCE C_{min}	MIN SPCG S_{min}	MIN CONC DEPTH H_{min}
	THRD ROD	REBAR					
SIMPSON SET-XP (ICC-ESR 2508)	⅜"ø	#3	½"ø	3"	6¼"	3"	5"
	½"ø	#4	⅝"ø	4"	9"	3"	6½"
	⅝"ø	#5	¾"ø	5"	10½"	3"	8¼"
	¾"ø	#6	⅞"ø	6"	12¼"	3"	9¾"
	⅞"ø	#7	1"ø	7"	13¾"	3"	11½"
	1"ø	#8	1⅛"ø	8"	15½"	3"	13"
	1¼"ø	#10	1⅜"ø	10"	18½"	6"	16¼"
HILTI HIT-HY 200R (ICC-ESR 3187)	⅜"ø	N/A	⅞"ø	3"	5"	1⅜"	4¼"
	N/A	#3	½"ø	3"	7¼"	1⅜"	4¼"
	½"ø	N/A	⅝"ø	4"	6"	2½"	5¼"
	N/A	#4	⅝"ø	4"	10¾"	2½"	5¼"
	⅝"ø	#5	¾"ø	5"	11⅜"	3⅛"	6½"
	¾"ø	#6	⅞"ø	6"	13¾"	3¾"	7¾"
	⅞"ø	#7	1"ø	7"	15½"	4⅜"	9"
	1"ø	#8	1⅛"ø	8"	17¼"	5"	10¼"
	N/A	#9	1⅜"ø	9"	18¾"	5⅝"	11¾"
	1¼"ø	N/A	1⅜"ø	10"	15"	6¼"	12¾"
	N/A	#10	1½"ø	10"	18½"	6¼"	13"

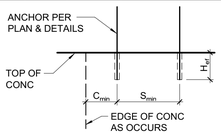

NOTES:

1. INSTALL ADHESIVE ANCHORS PER MANUFACTURER'S INFORMATION AND ICC REPORT.
2. CONTRACTOR TO VERIFY MINIMUM EDGE DISTANCES, SPACING, AND THICKNESS ARE IN ACCORDANCE W/ SCHEDULE PRIOR TO INSTALLING ANCHOR.
3. HOLES TO BE DRILLED W/ ROTARY DRILL ONLY. WHEN DRILLING HOLES IN EXISTING CONCRETE, USE CARE AND CAUTION TO AVOID CUTTING OR DAMAGING THE EXISTING REINFORCING BARS. MAINTAIN A REASONABLE CLEARANCE BETWEEN REINFORCEMENT AND THE DRILLED-IN ANCHOR. FILL ABANDONED HOLES W/ HIGH STRENGTH GROUT.
4. SPECIAL INSPECTION IS REQUIRED PER SECTION 1705A AND THE REQUIREMENTS OF THE ICC REPORTS. THE SPECIAL INSPECTOR MUST BE ON THE JOB SITE PERIODICALLY DURING ANCHOR INSTALLATION TO VERIFY ANCHOR TYPE, ANCHOR DIMENSIONS, HOLE CLEANLINESS, EMBEDMENT DEPTH, CONCRETE TYPE, CONCRETE COMPRESSIVE STRENGTH, DRILL BIT DIAMETER, HOLE DEPTH, EDGE DISTANCE(S), ANCHOR SPACING(S), CONCRETE THICKNESS, AND TIGHTENING TORQUE. SEE DRAWINGS FOR SPECIFIC TENSION TEST LOADS FOR ANCHORS.

16 ADHESIVE ANCHOR IN CONCRETE
3/4" = 1'-0"

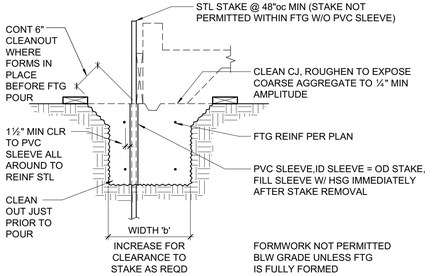

NOTE:
FOUNDATION CONCRETE MAY BE PLACED DIRECTLY INTO NEAT EXCAVATIONS PROVIDED THE FOUNDATION TRENCH WALLS ARE STABLE AS DETERMINED BY THE GEOTECHNICAL ENGINEER SUBJECT TO THE APPROVAL OF THE AUTHORITY HAVING JURISDICTION.

17 FORMWORK STAKES AT FOOTING
3/4" = 1'-0"

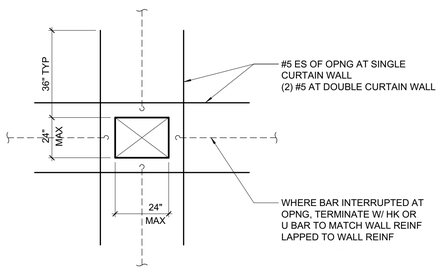

18 TYPICAL REINFORCING @ CONCRETE WALL SMALL OPENING
3/4" = 1'-0"

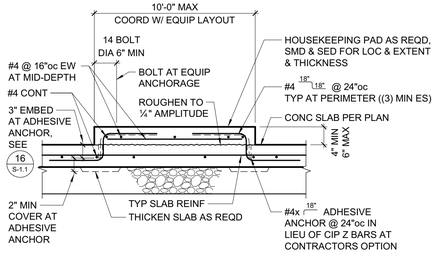

12 TYPICAL HOUSEKEEPING PAD AT SLAB ON GRADE
3/4" = 1'-0"

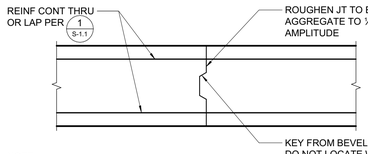

NOTE:
LOCATION OF JOINTS TO BE SUBMITTED TO ARCHITECT/ENGINEER FOR REVIEW PRIOR TO PLACEMENT OF CONCRETE

13 FOOTING CONSTRUCTION JOINT
3/4" = 1'-0"

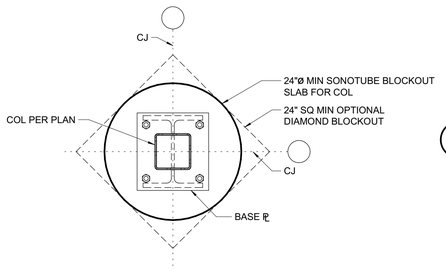

14 SLAB BLOCKOUT
1" = 1'-0"

SCREW ANCHOR IN 3000 PSI MIN CONCRETE

ANCHOR TYPE	ANCHOR AND PILOT HOLE DIA	MINIMUM EMBEDMENT H_{nom}	MINIMUM EDGE DIST C_{min}	MINIMUM SPCG S_{min}	MINIMUM CONCRETE DEPTH H_{min}	INSTALL TORQUE (FT-LB)	MAX INSTALL TORQUE (FT-LB)
SIMPSON TITEN HD (ICC-ESR 2713)	⅜"	2½"	2 1⅛"	3"	4"	10	50
	½"	3¼"	3⅜"	3"	5"	10	65
	⅝"	4"	4½"	3"	6"	10	100
	¾"	5½"	6"	3"	8¾"	20	150
HILTI KH-EZ (ICC-ESR 3027)	⅜"	2½"	3"	3"	4"	10	40
	½"	3"	3¾"	3"	4¾"	10	45
	⅝"	3¼"	3⅝"	4"	5"	10	85
	¾"	4"	4 7⁄16"	4"	6"	20	115

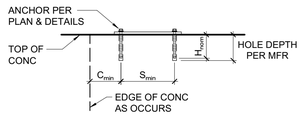

NOTES:

1. INSTALL SCREW ANCHORS PER MANUFACTURER'S INFORMATION AND ICC REPORT INSTRUCTIONS. SPECIAL INSPECTION IS REQUIRED PER SECTION 1705A OF THE CBC AND THE REQUIREMENTS OF THE ICC REPORTS. INSTALLED ANCHORS SHALL BRING CONNECTED PLIES INTO FIRM CONTACT, MEETING THE INSTALL TORQUE BUT NOT EXCEEDING THE MAXIMUM INSTALL TORQUE.
2. CONTRACTOR TO VERIFY MINIMUM EDGE DISTANCES, SPACING AND THICKNESS ARE IN ACCORDANCE W/ SCHEDULE PRIOR TO INSTALLING ANCHOR.
3. HOLES TO BE DRILLED W/ ROTARY DRILL ONLY. WHEN INSTALLING DRILLED-IN ANCHORS IN EXISTING REINFORCED CONCRETE, USE CARE AND CAUTION TO AVOID CUTTING OR DAMAGING THE EXISTING REINFORCING BARS. MAINTAIN A REASONABLE CLEARANCE BETWEEN REINFORCEMENT AND THE DRILLED-IN ANCHOR. FILL ABANDONED HOLES W/ HIGH STRENGTH GROUT.
4. THE SPECIAL INSPECTOR MUST BE ON THE JOBSITE PERIODICALLY DURING ANCHOR INSTALLATION TO VERIFY ANCHOR TYPE, ANCHOR DIMENSIONS, HOLE CLEANLINESS, EMBEDMENT DEPTH, CONCRETE TYPE, CONCRETE COMPRESSIVE STRENGTH, DRILL BIT DIAMETER, HOLE DEPTH, EDGE DISTANCE(S), ANCHOR SPACING(S), CONCRETE THICKNESS, AND TIGHTENING TORQUE.
5. TEST ANCHORS IN ACCORDANCE W/ CBC SECTION 1910A.5.

15 SCREW ANCHOR IN CONCRETE
3/4" = 1'-0"

NOTES:
1. LOCATION OF PIPE/CONDUIT BY OTHERS.
2. PROVIDE SLEEVE AT PIPE PER 2 S-1.1 SIM.

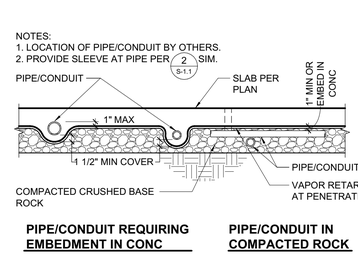

PIPE/CONDUIT REQUIRING EMBEDMENT IN CONC

PIPE/CONDUIT IN COMPACTED ROCK

7 CONDUIT & PIPE AT SLAB ON GRADE
3/4" = 1'-0"

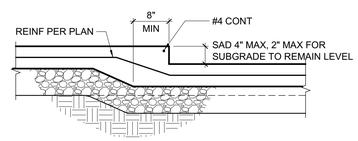

8 DEPRESSED SLAB - 4" MAX
3/4" = 1'-0"

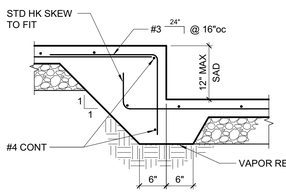

9 DEPRESSED SLAB - 12" MAX
3/4" = 1'-0"

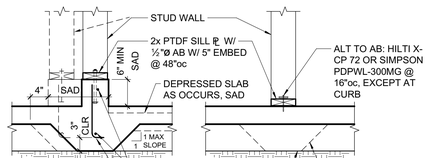

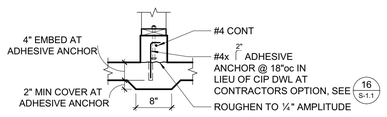

ALT CURB OPTION

10 NON-BEARING STUD WALL AT SLAB
3/4" = 1'-0"

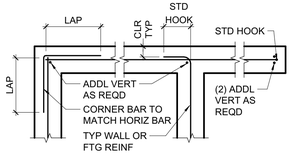

PLAN VIEW - SINGLE LAYER

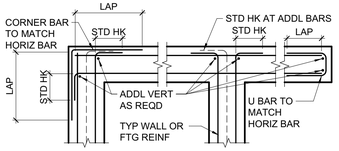

PLAN VIEW - 2 OR MORE LAYERS

NOTE:
FOOTING REINFORCING AT CORNER AND INTERSECTION TO BE SIMILAR

11 TYPICAL CORNER, INTERSECTION AND END REINFORCING
3/4" = 1'-0"

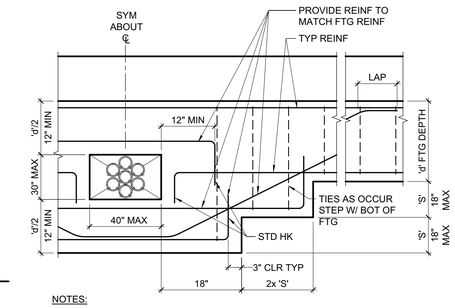

NOTES:
1. DO NOT LOCATE BLOCKOUT WITHIN 48" OF SHEAR WALL HOLD DOWN, IN FRAME FOUNDATIONS OR COLUMN PAD FOOTINGS.
2. MINIMUM DISTANCE BETWEEN BLOCKOUTS OR OTHER PIPES TO BE 48".

3 FOUNDATION BLOCKOUT
3/4" = 1'-0"

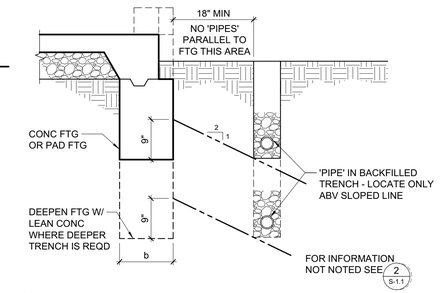

4 TRENCHING ADJACENT TO FOOTING
3/4" = 1'-0"

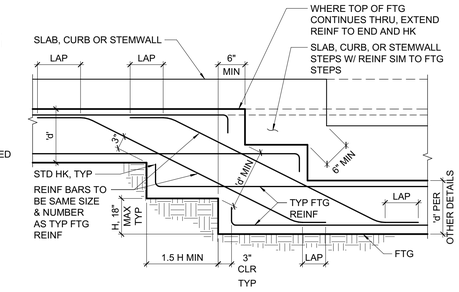

NOTE:
REMOVE ALL EARTH LOOSENED DURING EXCAVATION AND FILL W/ CONCRETE.

5 STEPPED FOOTING
3/4" = 1'-0"

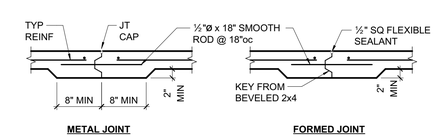

METAL JOINT **FORMED JOINT**

A **CONSTRUCTION/DOWEL JOINT**

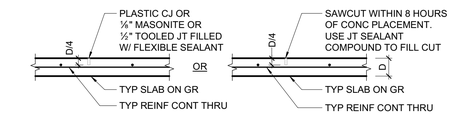

B **CONTROL JOINT**

6 SLAB ON GRADE JOINTS
3/4" = 1'-0"

MINIMUM BAR LAPS FOR REINFORCING STEEL
CONCRETE STRENGTH: 3000 PSI OR GREATER - (STAGGER SPLICES)

SIZE	LAP LENGTH	SIZE	LAP LENGTH	SIZE	LAP LENGTH
#3	18"	#6	34"	#9	86"
#4	24"	#7	56"	#10	102"
#5	28"	#8	70"	#11	120"

(CLASS B TOP BAR)
BAR SPCG SHALL NOT BE LESS THAN 4x BAR DIA OR 4". CLR SPCG BTWN SPLICED BARS SHALL NOT BE LESS THAN 2x BAR DIA.

CONC COVER FOR REINF STL ..... **'CLR'**

CAST AGAINST EARTH OR GR ..... 3"

EXPOSED TO EARTH (FORMED) OR WEATHER
#5 & SMALLER ..... 1½"
#6 & LARGER ..... 2"

NOT EXPOSED TO EARTH OR WEATHER
#4 & SMALLER ..... 1"
#5 & LARGER, & ALL BM STIRRUPS, COL TIES & SPIRALS ..... 1½"

ALL REINF BARS SHALL EXTEND AS FAR AS POSSIBLE & END IN A STD 90° OR 180° HK UNLESS DETAILED OTHERWISE

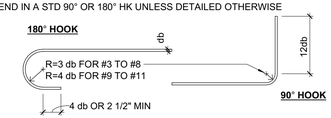

STANDARD HOOKS & BENDS



COL BAR & STRUCT OFFSET **SPLICE**



135° STIRRUP TIES #3, #4, #5 **STIRRUP #3, #4, #5** **CROSSTIE #3, #4, #5**

1 TYPICAL REINFORCING DETAIL (f'c = 3000psi MIN)
3/4" = 1'-0"

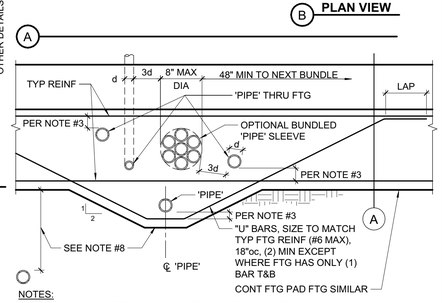

NOTES:
1. 'PIPE' = ANY PENETRATION THRU OR EMBEDDED IN FOUNDATION.
2. ALL PIPES THROUGH FOOTINGS TO BE WRAPPED OR SLEEVED AS FOLLOWS:
   a. SLEEVES: PROVIDE 1" MIN CLEAR ALL AROUND O.D. PIPE TO I.D. SLEEVE, UNO. SEAL SLEEVE ENDS W/ MASTIC OR PLASTIC BITUMINOUS CEMENT.
   b. WRAPPED VERTICAL PIPES: PROVIDE ⅛" NOMINAL SHEET FOAM W/ (3) WRAPS MINIMUM, UNO.
   c. WRAPPED HORIZONTAL PIPES: PROVIDE ¼" NOMINAL SHEET FOAM W/ (8) WRAPS MINIMUM, UNO.
   d. UNDERGROUND FIRE LINES 4" AND LARGER:
      1. SLEEVES: PROVIDE 2" MIN CLEAR ALL AROUND O.D. PIPE TO I.D. SLEEVE. SEAL ENDS PER ABOVE.
      2. WRAPPED: PROVIDE ⅛" NOMINAL SHEET FOAM W/ (16) WRAPS MINIMUM.
3. WRAPPED AND SLEEVED PIPES SHALL HAVE 1½" MIN CLEAR TO REINF STEEL. MINIMUM CONCRETE COVER AT PIPES TO BE 3".
4. CLEARANCE BETWEEN 'PIPES' TO BE 3d MIN TYP W/ A MAXIMUM OF (8) PIPES PER 48". GROUPS OF PIPES MAY BE BUNDLED AS SHOWN, EXCEPT IN PAD FOOTINGS.
5. NO 'PIPE' TO RUN PARALLEL IN FOOTINGS, STEM OR CURB.
6. PVC CONDUIT ('PIPE') EMBEDDED IN CURB/STEM MAY BE WIRE TIED TO HORIZONTAL REINF.
7. NO HORIZONTAL PIPES ALLOWED THROUGH FOOTING WITHIN 2'-0" EACH SIDE OF HOLDOWNS OR STEEL COLUMNS. NO VERTICAL PIPES ALLOWED IN FOOTINGS AT BRACED FRAMES.
8. PROVIDE 18" MIN OF COMPACTED FILL ABOVE PIPES UP TO 12"ø, FOR LARGER PIPES INCREASE COMPACTED FILL DEPTH 1'-0" OF FOR EACH 6" INCREASE IN PIPE DIAMETER. OTHERWISE DEEPEN FOOTING AS SHOWN.

2 PIPES THRU FOOTING
3/4" = 1'-0"

QUATTROCCHI KWOK ARCHITECTS
Main Office:
636 Fifth Street, Santa Rosa, CA 95404
Pleasanton Office:
600 Main Street, Suite E,
Pleasanton, CA 94566
(707) 576-0829

ZFA STRUCTURAL ENGINEERS
1212 fourth street | suite z **zfa.com**
santa rosa ca 95404 **707.526.0992**
zfa job no. 18254 **copyright © 2019**

LICENSED PROFESSIONAL ENGINEER — No. 54613 — STRUCTURAL — STATE OF CALIFORNIA

THIS DOCUMENT AND THE IDEAS INCORPORATED HEREIN, AS AN INSTRUMENT OF PROFESSIONAL SERVICE, IS THE PROPERTY OF THE ENGINEER AND IS NOT TO BE USED, IN WHOLE OR IN PART FOR ANY OTHER PROJECT WITHOUT THE PRIOR WRITTEN AUTHORIZATION OF THE ENGINEER.

FREEDOM HIGH SCHOOL

PERFORMING ARTS AND CTE FACILITIES

1050 NEROLY RD
OAKLEY, CA 94561

LIBERTY UNION HIGH SCHOOL DISTRICT

ZFA NO:	18254
ENGR / PM:	NBB / MJR / AIZ
DRAWING SCALE:	As indicated
PTN:	61721-0068

BID SET

AUGUST 13, 2019

SHEET TITLE

TYPICAL CONCRETE DETAILS

SHEET NUMBER

S-1.1

C:\revit_local\18254_FREEDOM HS PAC_S16C_nkk@zfa.com.rvt
8/5/2019 1:49:55 PM

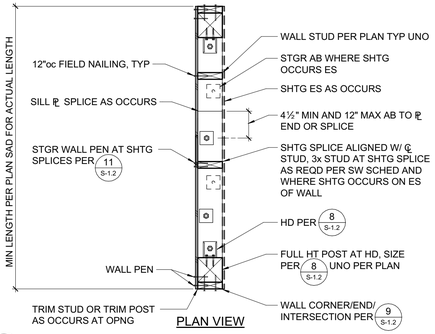

PLAN VIEW

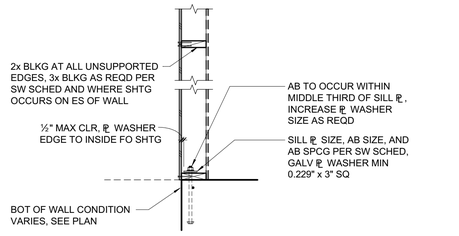

SECTION

NOTES:
1. PEN = PLYWOOD/OSB EDGE NAILING PER SW SCHED.
2. SILL ℄ AB WASHER HOLE MAY BE OVERSIZED UP TO ⅜". WASHER MAY BE DIAG SLOTTED UP TO 1 ¾" IN LENGTH. WHERE HOLE IS OVERSIZED OR SLOTTED, PROVIDE STD CUT WASHER.

7 SCHEMATIC SHEAR WALL CONSTRUCTION
3/4" = 1'-0"

RIM JOIST TO TOP ℄, TOE NAIL	10d @ 6"oc
TRUSSES, JOISTS OR RAFTERS AT ALL BEARING POINTS TOE NAILS EACH SIDE	(2) 10d
TRUSSES, JOISTS OR RAFTERS TO SIDE OF STUDS EIGHT (8) INCH JOISTS OR LESS	(3) 16d
FOR EACH ADDITIONAL 4 INCHES OF DEPTH OF JOIST	(1) 16d
BLOCKING BETWEEN JOISTS OR RAFTERS: TO JOIST OR RAFTERS - TOE NAILS EA SIDE, EA END	(2) 10d
TO JOIST OR RAFTER BEARINGS - TOE NAILS EA SIDE	(2) 10d
BLOCKING BETWEEN STUDS, EACH END TOE NAILS	(2) 10d OR (2) 16d
BRIDGING TO JOIST, TOE NAIL EACH END	(2) 8d
2" SUBFLOOR TO JOIST OR GIRDER, BLIND & FACE NAIL	(2) 16d
SOLE PLATE TO JOIST OR BLOCKING, FACE NAIL	16d @ 16"oc
SOLE PLATE TO JOIST OR BLOCKING AT BRACED WALL PANELS	(3) 16d @ 16"oc
TOP PLATE TO STUD, END NAIL	(2) 16d
STUD TO SOLE PLATE, TOE NAIL	(4) 8d
DOUBLE STUDS AT EXTERIOR WALLS, FACE NAIL	16d @ 12"oc
DOUBLE STUDS, FACE NAIL	16d @ 24"oc
DOUBLE TOP PLATES, FACE NAIL	16d @ 12"oc
TOP PLATES, LAPS & INTERSECTIONS, FACE NAIL	(3) 16d
CONTINUOUS HEADER, TWO PIECES	16d @ 16"oc ALONG EACH EDGE
DOUBLE TOP PLATE LAP AT CORNER	(3) 16d
CONTINUOUS HEADER TO STUD, TOE NAIL	(4) 8d
CEILING JOISTS, LAPS OVER PARTITIONS, FACE NAIL	(3) 16d
CEILING JOISTS TO PARALLEL RAFTERS, FACE NAIL	(3) 16d
BUILT-UP CORNER STUDS	16d @ 12"oc
POST TO SILL/SOLE/TOP PLATE, EACH SIDE TOE NAIL	(4) 10d

10 NAILING SCHEDULE
3/4" = 1'-0"

NOTE:
SHEATHING SHEETS ARE TO BE AS LARGE AS POSSIBLE. STAGGER SHEETS. JOINTS ARE TO BE CENTERED OVER BEARING. NAIL HEADS SHALL BE DRIVEN FLUSH W/ SHEATHING. MINIMUM SHEATHING SIZE IS 24" WIDTH x 48" LENGTH AT FLOOR AND ROOF, AND 12"x48" AT WALLS.

11 SHEATHING NAILING
1 1/2" = 1'-0"

NOTE:
FRAMING SHOWN IS SCHEMATIC,
SEE PLAN FOR SPECIFIC REQUIREMENTS

12 SCHEMATIC SHEAR WALL ELEVATION
1/4" = 1'-0"

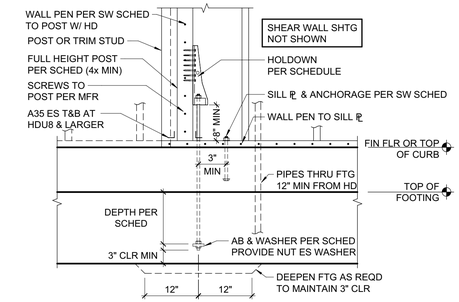

HOLDOWN	AB OR THRD ROD	WASHER AT AB	DEPTH	MIN FTG WIDTH	MIN POST SIZE UNO ON PLANS
HDU2	⅝"ø	¼"x2½" SQ	12"	18"	4x
HDU4	⅝"ø	¼"x2½" SQ	12"	18"	4x
HDU5	⅝"ø	¼"x2½" SQ	12"	18"	4x
HDU8	⅞"ø	⅜"x3½" SQ	15"	24"	6x6
HDU11	1"ø	⅜"x3½" SQ	24"	24"	6x6
HDU14*	1"ø	⅜"x3½" SQ	24"	24"	6x6

*NUTS AT ANCHOR ROD TO BE HEAVY HEX

8 TYPICAL HOLDOWN
3/4" = 1'-0"

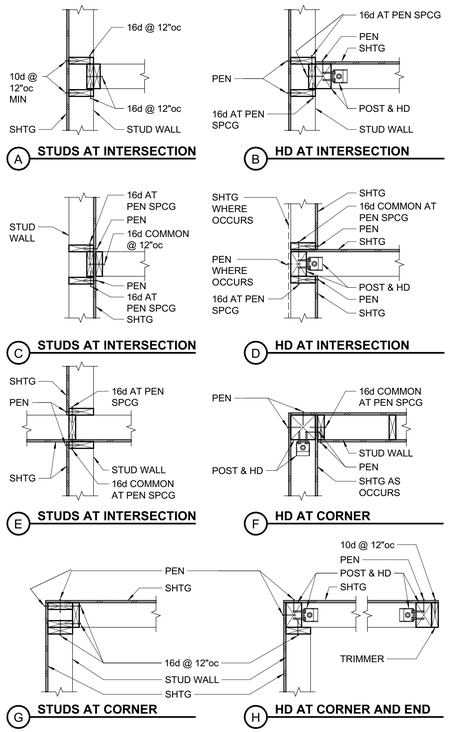

9 TYPICAL PLAN VIEW OF STUD WALL INTERSECTIONS
3/4" = 1'-0"

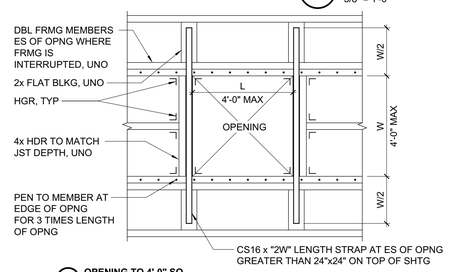

A OPENING TO 4'-0" SQ

B CLOSELY SPACED OPENINGS BETWEEN FRAMING

PLAN

C ISOLATED OPENING BETWEEN FRAMING UP TO 24"

5 OPENING IN DIAPHRAGM
3/4" = 1'-0"

NOTES:
1. OPENINGS < 6" SQ DO NOT REQUIRE BLOCKING AND STRAPPING.
2. NO ADDITIONAL OPENINGS WITHIN 4'-0" ALL AROUND.
3. NO OPENINGS PERMITTED IN SHEAR WALL (C) OR HIGHER OR IN SHEAR WALLS LESS THAN 10'-0" LONG UNLESS SPECIFICALLY DETAILED ON STRUCTURAL PLANS. CONTACT STRUCTURAL ENGINEER FOR ASSISTANCE.
4. FRAME OPENINGS PER 1/S-1.2 WHERE STUDS ARE INTERRUPTED.

6 SMALL OPENINGS IN SHEARWALLS
3/4" = 1'-0"

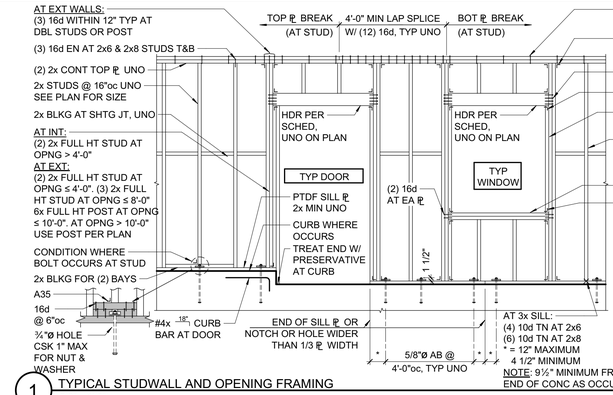

HEADER SCHEDULE		
MAX SPAN	NOMINAL HEADER	
	BRG	INT NON-BRG
6'-0"	6x6 OR 8x8	6x6
8'-0"	6x8 OR 8x10	6x6

1. HEADERS TO MATCH WIDTH OF WALL STUDS.
2. FOR LARGER OPENINGS, SEE PLANS.
3. AT 2x8 WALLS, USE 8x HEADER PER SCHEDULE OR 5¼□ LVL + SHIM

1 TYPICAL STUDWALL AND OPENING FRAMING
3/8" = 1'-0"

1. **DO NOT** CUT OR NOTCH FLANGES.
2. **DO NOT** CUT HOLES LARGER THAN 1½" ROUND IN CANTILEVERS.
3. HOLE SIZES AND LOCATIONS NOT MEETING THE HOLE GUIDELINES TO BE VERIFIED BY MANUFACTURER.
4. FOR SIMPLE SPANS AND UNIFORM LOADS A CHALK LINE CAN BE USED TO SHOW THE LIMITS WHEREIN HOLES ARE ACCEPTABLE. ONCE DISTANCE (D) HAS BEEN DETERMINED, THAT DIAMETER HOLE CAN BE PLACED ANYWHERE WITHIN THE WEB DEPTH (h).
5. D = DISTANCE IN FEET FROM CENTERLINE SUPPORT TO CENTER LINE OF HOLE.
   L = BEAM SPAN IN FEET; FROM CENTER LINE SUPPORT TO CENTER LINE SUPPORT.
   ø = HOLE DIAMETER IN INCHES.
   h = WEB DEPTH IN INCHES.

$D_{MIN} = \frac{3L\text{ø}}{5h}$ OR 12", WHICHEVER IS GREATER

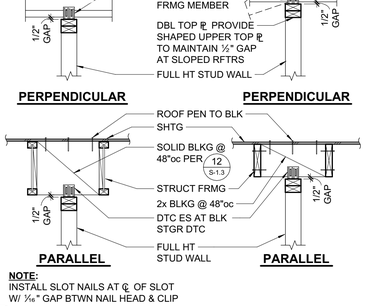

HOLE GUIDELINES

BRIDGING



POINT LOAD

2 I-JOIST HOLES & BRIDGING
3/4" = 1'-0"

3 TYPICAL BEAM IN AND THRU STUD WALL
3/4" = 1'-0"

NOTE:
INSTALL SLOT NAILS AT ℄ OF SLOT W/ ⅛" GAP BTWN NAIL HEAD & CLIP

4 TYPICAL NON-STRUCTURAL STUD WALL DETAILS
3/4" = 1'-0"

QUATTROCCHI KWOK ARCHITECTS
Main Office:
636 Fifth Street, Santa Rosa, CA 95404
Pleasanton Office:
600 Main Street, Suite E,
Pleasanton, CA 94566
(707) 576-0829

ZFA STRUCTURAL ENGINEERS
1212 fourth street | suite z **zfa.com**
santa rosa ca 95404 **707.526.0992**
zfa job no. 18254

copyright © 2019

REGISTERED PROFESSIONAL ENGINEER
NILS S. WARNKEN
No. 54613
STRUCTURAL
STATE OF CALIFORNIA

THIS DOCUMENT AND THE IDEAS INCORPORATED HEREIN, AS AN INSTRUMENT OF PROFESSIONAL SERVICE, IS THE PROPERTY OF THE ENGINEER AND IS NOT TO BE USED, IN WHOLE OR IN PART FOR ANY OTHER PROJECT WITHOUT THE PRIOR WRITTEN AUTHORIZATION OF THE ENGINEER.

FREEDOM HIGH SCHOOL

PERFORMING ARTS AND CTE FACILITIES

1050 NEROLY RD
OAKLEY, CA 94561

LIBERTY UNION HIGH SCHOOL DISTRICT

ZFA NO:	18254
ENGR / PM:	NBB / MJR / AIZ
DRAWING SCALE:	As indicated
PTN:	61721-0068

BID SET

AUGUST 13, 2019

SHEET TITLE

TYPICAL WOOD DETAILS

SHEET NUMBER

S-1.2

C:\revit_local\18254_FREEDOM HS PAC_S18C_nikb@zfa.com.rvt
8/5/2019 1:49:58 PM

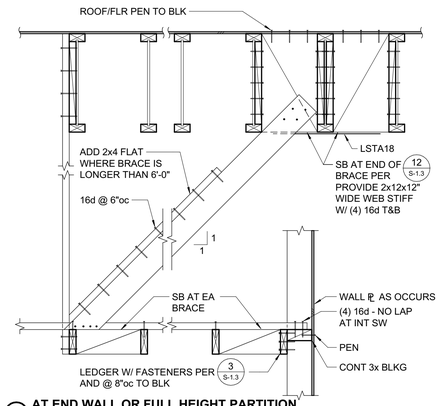

A AT END WALL OR FULL HEIGHT PARTITION

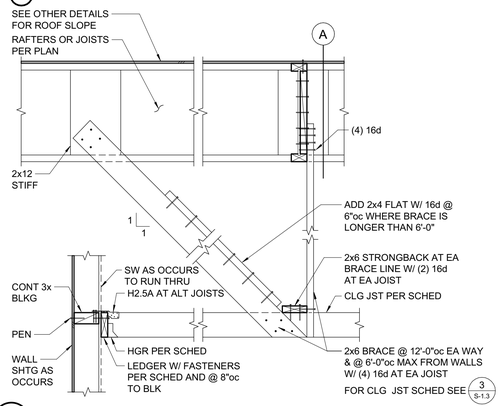

11 CEILING JOISTS (SPAN TO WALLS) AT EXTERIOR WALLS
3/4" = 1'-0"

7 NOT USED
3/4" = 1'-0"

8 NOT USED
3/4" = 1'-0"

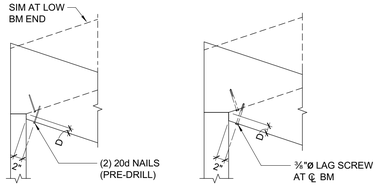

NOTES:
1. DO NOT OVERCUT NOTCHES OR SEAT CUTS.
2. SEE 6/S-1.3 FOR MAXIMUM NOTCH OR SEAT CUT SIZE.

9 BEAM SEAT CUT/NOTCH REINFORCEMENT
3/4" = 1'-0"

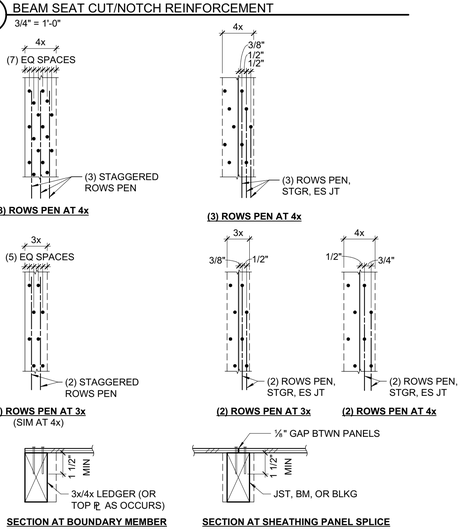

NOTE:
SHEATHING SHEETS ARE TO BE AS LARGE AS POSSIBLE. STAGGER SHEETS. JOINTS ARE TO BE CENTERED OVER BEARING. NAIL HEADS SHALL BE DRIVEN FLUSH W/ SHEATHING. MINIMUM SHEATHING SIZE IS 24" WIDTH x 48" LENGTH.

10 FLOOR/ROOF SHEATHING - MULTIPLE NAIL ROWS
1 1/2" = 1'-0"

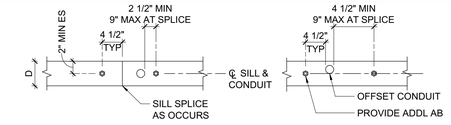

CASE 1 - SINGLE, CONDUIT DIAMETER ≤ D/3, MAX SPCG = 16"oc

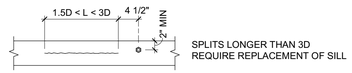

CASE 2 - SPLIT IN SILL

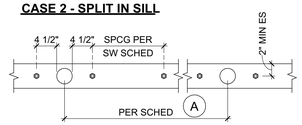

CASE 3 - SINGLE, CONDUIT DIAMETER > D/3

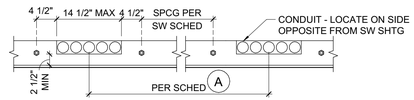

CASE 4 - NOTCH FOR CONDUIT

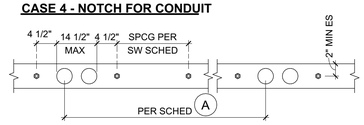

CASE 5 - MULTI CONDUIT, DIAMETER > D/3

SCHEDULE A			
	CASE 3	CASE 4	CASE 5
SW Ⓐ	48"	32"	48"
SW Ⓑ	64"	48"	64"
SW Ⓒ	80"	64"	N/A
SW Ⓓ	N/A	N/A	N/A

NOTE:
1. ALL PENETRATIONS THROUGH SHEAR WALL SILL PLATE SHALL CONFORM TO THE REQUIREMENTS OF THIS DETAIL OR BE REROUTED PRIOR TO INSTALLATION OF SILL.
2. ADDITIONAL ANCHOR BOLTS TO BE INSTALLED PER 15/S-1.1 WHERE NECESSARY. AB DIA AS REQD BY SW SCHED.

4 HOLES IN PLATES AT SHEAR WALLS
3/4" = 1'-0"

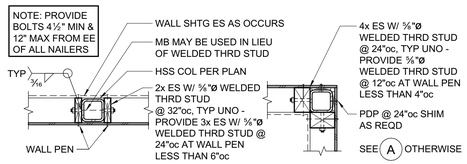

A HSS COLUMN WITHIN WALL

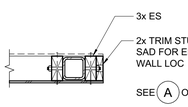

C HSS COLUMN AT CORNER

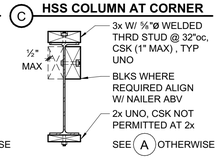

B HSS COLUMN AT END OF WALL (EDGE OF OPNG SIM)

D WIDE FLANGE NAILER (CHANNEL & HSS SIM)

5 TYPICAL STEEL BEAM/COLUMN NAILERS
3/4" = 1'-0"

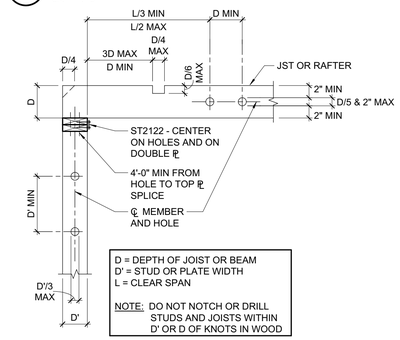

6 HOLES AND NOTCHES IN WOOD STUDS, JOISTS, AND PLATES
3/4" = 1'-0"

TOP PLATE SPLICE SCHEDULE			
MARK	LAP SPLICE (CASE 1)	STRAP SPLICE (CASE 2)	STRAP SPLICE (CASE 3)
A	(12) 16d PER 4'-0" MIN LAP	MSTC28	
B	(22) 16d PER 4'-0" MIN LAP	MSTC40	
C	(26) 16d PER 6'-0" MIN LAP	MSTC52	
D	(32) 16d PER 6'-0" MIN LAP	MSTC66	
E	(36) 16d PER 8'-0" MIN LAP	MSTC28 EA SIDE	
F	(44) 16d PER 8'-0" MIN LAP	MSTC40 EA SIDE	
G	(50) 16d PER 10'-0" MIN LAP	MSTC52 EA SIDE	
H		MSTC66 EA SIDE	
J			℄ ¼"x4" W/ (5) 1" MB EE

NOTES:
1. AT LAP SPLICES, SPACE NAILS @ 3"oc MIN (MAX 12"oc). STAGGER AT 2½" GAGE.
2. USE STRAP SPLICE WHERE BM INTERSECTS TOP ℄.
3. NAILS TO MATCH LAP SPLICE ES OF SPLICE (16d @ 12"oc MIN)
4. USE SPLICE TYPE A UNO.
5. USE 2x6 DF#1 OR BETTER DOUBLE TOP PLATE AT MARK H.
6. USE 6x6 MIN DF#1 TOP UPPER PLATE AT MARK J.

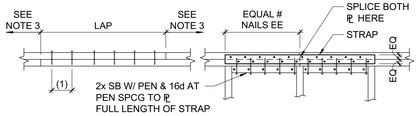

CASE 1 **CASE 2**

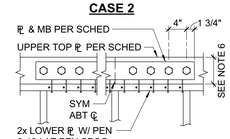

CASE 3

1 TOP PLATE SPLICE SCHEDULE AND DETAILS
3/4" = 1'-0"



NAILED LAP SPLICE

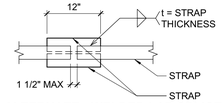

ALTERNATE - WELDED LAP SPLICE

TIE STRAP SCHEDULE					
MARK	STRAP	MIN. SCREWS ES OF ✦	MAX. SCREW SPACING (SEE NOTES #1 & #2) CASE 1	CASE 2 EL	CASE 2 RL	MIN. END LENGTH (EL)
Ⓐ	CS14	(13) 10d	10d @ 4"oc STGR	FILL ALL HOLES	10d @ 4"oc STGR	16"
Ⓑ	CMSTC16	(25) 10d	10d @ 3"oc STGR	FILL ALL HOLES	10d @ 3"oc STGR	24"

1. CASE 1 APPLIES UNLESS END LENGTH (EL) IS NOTED ON PLANS. WHERE END LENGTH (EL) IS NOTED, SEE CASE 2.



CASE 1 **CASE 2**

2. AS REQUIRED, PROVIDE CLOSER NAIL SPACING TO MEET MINIMUM NAILING EACH SIDE OF ✦ .
3. LOCATE STRAPS OVER SHEATHING AND BLOCK UNDER STRAP W/ FLAT 2x6 (2x4 AT CS16/CS14) WHERE NO FRAMING OCCURS, UNO.
4. SEE PLANS FOR STRAP LENGTHS, LOCATIONS AND DETAILS, UNO.
5. SPLICE STRAPS AS SHOWN WHERE LENGTH PER PLAN EXCEEDS AVAILABLE PRODUCT LENGTH

2 TIE STRAP SCHEDULE
3/4" = 1'-0"

CEILING JOIST SCHEDULE			
MAX SPAN	JOIST SIZE	HANGER	LEDGER
7'-6"	2x4 @ 16"oc	LU24	2x4 W/ (2) 16d @ 16"oc
11'-0"	2x6 @ 16"oc	LU26	2x6 W/ (3) 16d @ 16"oc
14'-0"	2x8 @ 16"oc	LU28	2x8 W/ (4) 16d @ 16"oc
16'-6"	2x10 @ 16"oc	LU210	2x10 W/ (5) 16d @ 16"oc

NOTES:
1. WHERE LEDGERS ARE NAILED THROUGH WALL SHTG, USE 20d NAILS IN LIEU OF 16d NAILS.
2. PROVIDE CONT FULL DEPTH BLOCKING AT MIDSPAN.

3 CEILING JOIST SCHEDULE
3/4" = 1'-0"

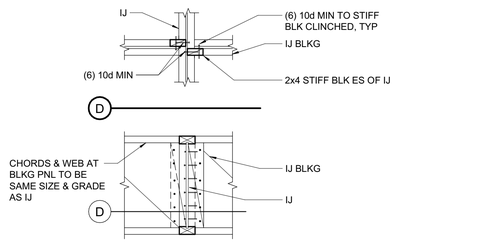

B I-JOIST BLKG

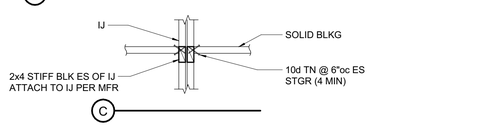

A SOLID BLOCKING

12 I-JOIST BLOCKING
3/4" = 1'-0"

QUATTROCCHI KWOK ARCHITECTS
Main Office:
636 Fifth Street, Santa Rosa, CA 95404
Pleasanton Office:
600 Main Street, Suite E,
Pleasanton, CA 94566
(707) 576-0829

ZFA STRUCTURAL ENGINEERS
1212 fourth street | suite z **zfa.com**
santa rosa ca 95404 **707.526.0992**
zfa job no. 18254

copyright © 2019

THIS DOCUMENT AND THE IDEAS INCORPORATED HEREIN, AS AN INSTRUMENT OF PROFESSIONAL SERVICE, IS THE PROPERTY OF THE ENGINEER AND IS NOT TO BE USED, IN WHOLE OR IN PART FOR ANY OTHER PROJECT WITHOUT THE PRIOR WRITTEN AUTHORIZATION OF THE ENGINEER.

FREEDOM HIGH SCHOOL

PERFORMING ARTS AND CTE FACILITIES

1050 NEROLY RD
OAKLEY, CA 94561

LIBERTY UNION HIGH SCHOOL DISTRICT

ZFA NO:	18254
ENGR / PM:	NBB / MJR / AIZ
DRAWING SCALE:	As indicated
PTN:	61721-0068

BID SET

AUGUST 13, 2019

SHEET TITLE

TYPICAL WOOD DETAILS

SHEET NUMBER

S-1.3

C:\revit_local\18254_FREEDOM HS PAC_S19C_nkb@zfa.com.rvt
8/5/2019 1:50:00 PM

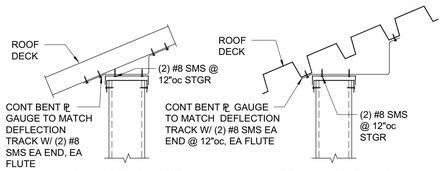

AT SLOPED ROOF **AT SLOPED ROOF**

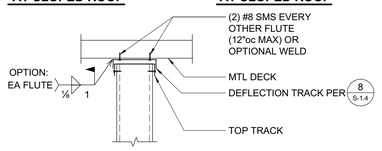

PERPENDICULAR TO FLUTES

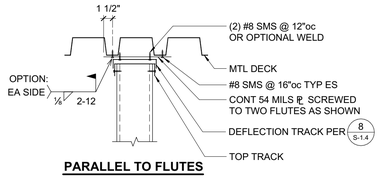

PARALLEL TO FLUTES

9 ATTACHMENT OF NON-BEARING STUDS TO METAL DECK
1" = 1'-0"

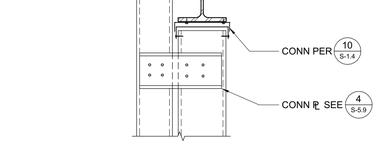

A WALL AT BM

B WALL OFFSET AT BM

C WALL AT BM W/ FIREPROOFING

10 ATTACHMENT OF NON-BEARING STUDS TO STEEL BEAM
1" = 1'-0"

11 WALL CONNECTION
1" = 1'-0"

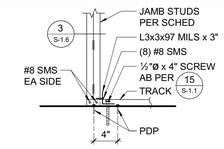

B AT INT OR EXT DOOR < 8'-0" WIDE

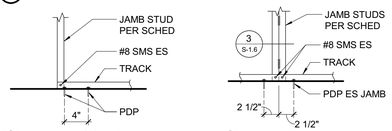

A AT INT DOOR < 4'-0" WIDE **C TYP INT**

FOR INFORMATION NOT NOTED SEE 3 S-1.4

5 INTERIOR JAMB BASE
1" = 1'-0"

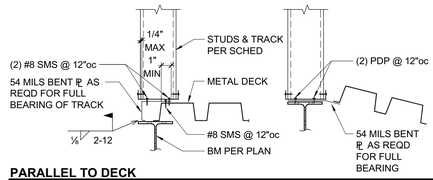

PARALLEL TO DECK

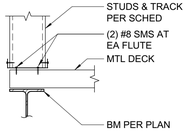

SEE 1 S-1.7 FOR ATTACHMENT OF DECK TO STRUCTURE

PERPENDICULAR TO ROOF DECK

6 ATTACHMENT OF STUDS TO METAL DECK
1" = 1'-0"

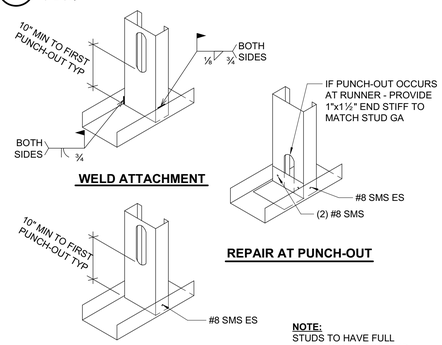

NOTE:
STUDS TO HAVE FULL BEARING ON TRACK TYP

7 STUD OR JOIST TO TRACK
1" = 1'-0"

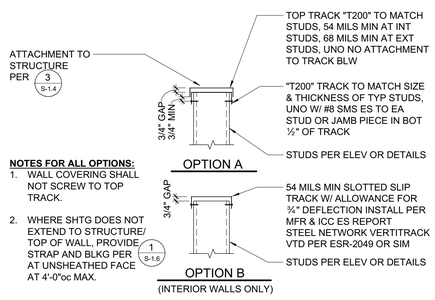

NOTES FOR ALL OPTIONS:
1. WALL COVERING SHALL NOT SCREW TO TOP TRACK.
2. WHERE SHTG DOES NOT EXTEND TO STRUCTURE/ TOP OF WALL, PROVIDE STRAP AND BLKG PER 1 S-1.6 AT UNSHEATHED FACE AT 4'-0"oc MAX.

8 NON-BEARING WALL DEFLECTION TRACK AT TOP
1" = 1'-0"

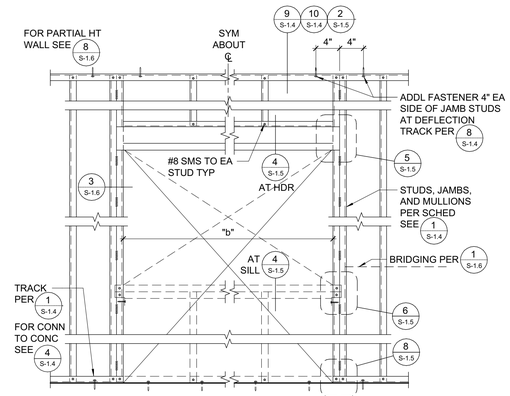

3 INTERIOR NON-BEARING WALL (OPENING AS OCCURS)
1" = 1'-0"

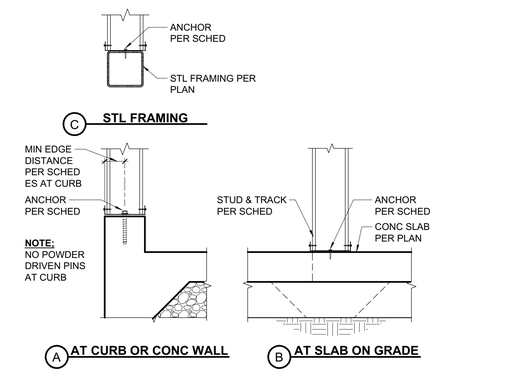

	ANCHOR TYPE, DIAMETER AND SPACING				
LOCATION	SCREW ANCHOR	POWDER DRIVEN PINS	EXPANSION ANCHOR	CAST-IN-PLACE	DETAIL
EXTERIOR WALL SLAB ON GRADE (H=18'-0" MAX)	½"ø @ 36"oc	NOT PERMITTED	½"ø @ 36"oc	½"ø @ 48"oc	A
INTERIOR WALL SLAB ON GRADE	½"ø @ 48"oc	0.157"ø @ 16"oc	½"ø @ 48"oc	½"ø @ 48"oc	B
STL FRAMING (H=18'-0" MAX)	N/A	0.157"ø @ 16"oc	N/A	N/A	C
MIN CONC EDGE DISTANCE	3"	3"	3"	3"	
REF DETAIL & NOTES	15 S-1.1	STAGGER PINS	1 S-0.2	NOTE #4	

NOTES:
1. PROVIDE (2) ANCHORS MIN PER TRACK SEGMENT.
2. FOUNDATION AND SLAB REINFORCING PER OTHER DETAILS.
3. CENTER FASTENERS W/ TRACK, UNO.
4. SEE PLAN AND SCHEDULE FOR ADDITIONAL ANCHORAGE REQUIREMENTS, AS OCCURS.
5. SEE SHEAR WALL SCHEDULE FOR ADDITIONAL REQUIREMENTS.

4 TYPICAL BOTTOM TRACK ANCHORS AT CONCRETE
1" = 1'-0"

LIGHT GAUGE FRAMING SCHEDULE

LOCATION	MINIMUM MEMBER SIZE	MAX SPAN (MAX PARAPET HT)	MAX SPACING UNO	REFERENCE DETAIL
EXTERIOR STUDS	600S162-43	18'-0" (2'-0")	16"oc	
	800S162-54	24'-0" (8'-0")	16"oc	
	1000S162-54	16'-0"	16"oc	
EXTERIOR HEADERS	(2) 800S162-54 STUDS AND (2) 600T150-68 TRACKS	b ≤ 12'-0"		SEE 4 S-1.5
	(2) 800S162-54 STUDS AND (2) 800T150-54 TRACKS	b ≤ 8'-0"		
	(2) 600S162-54 STUD AND (2) 600T150-54 TRACK	b ≤ 4'-0"		
EXTERIOR SILLS	600S162-54 STUD AND 600T150-68 TRACK	b ≤ 12'-0"		SEE 4 S-1.5
	600S162-43 STUD AND 600T150-43 TRACK	b ≤ 8'-0"		
	600T150-43	b ≤ 4'-0"		
EXTERIOR JAMBS	(3) 600S162-68	18'-0"	b ≤ 12'-0"	SEE 3 S-1.6
	(2) 600S162-54	18'-0"	b ≤ 8'-0"	
	(2) 600S162-54	18'-0"	b ≤ 4-0"	
PARAPET TOP TRACK	600S162-54 STUD AND 600T150-54 TRACK			SEE 4 S-1.5
INTERIOR STUDS	400S162-33	16'-0"	16"oc	
	600S162-43	30'-0"	16"oc	
INTERIOR STUDS W/ SHELVING OR EQUIPMENT ANCHORAGE	400S162-54	15'-0"	16"oc	
	600S162-54	15'-0"	16"oc	
INTERIOR HEADERS	(2) 600S162-33 STUDS AND (2) 600T150-43 TRACKS	b ≤ 12'-0"		SEE 4 S-1.5
	(2) 800S162-54 STUDS AND (2) 800T150-33 TRACKS			
	(2) 600S162-33 STUDS AND (2) 200T150-43 TRACKS	b ≤ 8'-0"		
	400T200-43 (OR 600T200-43)	b ≤ 4'-0"		
INTERIOR SILLS	400S162-43 STUD AND 400T150-43 TRACK (OR 600S162-33 AND 600T150-33)	b ≤ 14'-0"		SEE 4 S-1.5
	400T150-43 (OR 600T150-43)	b ≤ 8'-0"		
INTERIOR JAMBS	(3) 400S162-43 OR (2) 600S162-54 OR (2) 800S162-54	30'-0"	b ≤ 12'-0"	SEE 3 S-1.6
	(2) 400S162-43 (OR (2) 600S162-33)	18'-0"	b ≤ 4-0"	
CEILING JOISTS	400S162-33	10'-0"	16"oc	SEE 9 S-1.6
	600S162-43	17'-0"	16"oc	
CEILING HANGERS	400S162-43	h ≤ 6'-0"		SEE 10 S-1.6
	400S162-43 & 400T150-43	h ≤ 8'-0"		

1. TYP TRACK TO BE SAME GAUGE AS STUD OR 43 MILS MIN, UNO. FLANGE TO BE 1½" MIN.
2. AT EXTERIOR DOUBLE WALL BOTH MAIN WALL & FURRING WALL ARE EXTERIOR STUDS.
3. A WALL W/ ANY PORTION HAVING EXTERIOR EXPOSURE SHALL BE FRAMED ENTIRELY AS AN EXTERIOR WALL.
4. MULTIPLE ADJACENT WINDOWS TO EACH HAVE INDIVIDUAL HEADERS AND FULL JAMB STUDS BETWEEN WINDOWS.
5. TYP WALL BRIDGING/BLKG PER **1/S-1.6**, AT DOUBLE WALL PROVIDE BRIDGING AT BOTH WALLS.
6. TYP STUD/JOIST TO TRACK PER **7/S-1.4** .
7. COORDINATE STUD DEPTH W/ ARCH DRAWINGS. INCREASE MIN HDR, SILL OR JAMB MEMBER DEPTHS AS REQD TO MATCH ACTUAL WALL STUD DEPTH.
8. "b" INDICATES OPENING WIDTH PER **2/S-1.4** OR **3/S-1.4**.

1 SCHEDULE - LIGHT GAUGE METAL FRAMING, UNO
3/4" = 1'-0"

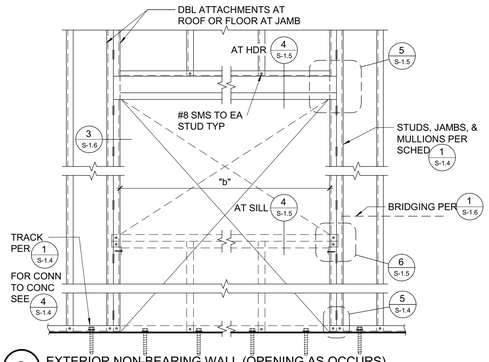

2 EXTERIOR NON-BEARING WALL (OPENING AS OCCURS)
1" = 1'-0"

QUATTROCCHI KWOK ARCHITECTS
Main Office:
636 Fifth Street, Santa Rosa, CA 95404
Pleasanton Office:
600 Main Street, Suite E,
Pleasanton, CA 94566
(707) 576-0829

ZFA STRUCTURAL ENGINEERS
1212 fourth street | suite z **zfa.com**
santa rosa ca 95404 **707.526.0992**
zfa job no. 18254

copyright © 2019



THIS DOCUMENT AND THE IDEAS INCORPORATED HEREIN, AS AN INSTRUMENT OF PROFESSIONAL SERVICE, IS THE PROPERTY OF THE ENGINEER AND IS NOT TO BE USED, IN WHOLE OR IN PART FOR ANY OTHER PROJECT WITHOUT THE PRIOR WRITTEN AUTHORIZATION OF THE ENGINEER.

FREEDOM HIGH SCHOOL

PERFORMING ARTS AND CTE FACILITIES

1050 NEROLY RD
OAKLEY, CA 94561

LIBERTY UNION HIGH SCHOOL DISTRICT

ZFA NO:	18254
ENGR / PM:	NBB / MJR / AIZ
DRAWING SCALE:	As indicated
PTN:	61721-0068

BID SET

AUGUST 13, 2019

SHEET TITLE

TYPICAL METAL STUD ELEV & CONNECTION DETAILS

SHEET NUMBER

S-1.4

C:\revit_local\18254_FREEDOM HS PAC_S18C_nikb@zfa.com.rvt
8/5/2019 1:50:03 PM

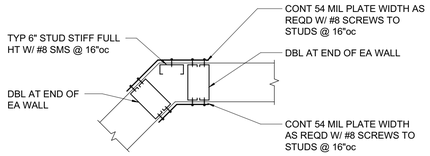

11 SLOPED/SKEWED WALL INTERSECTIONS
1" = 1'-0"

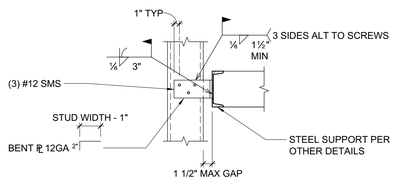

12 VERTICAL SUPPORT CLIP
1" = 1'-0"

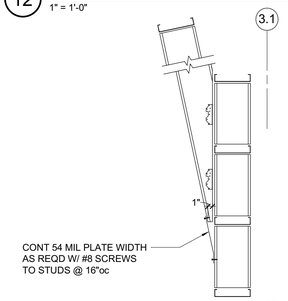

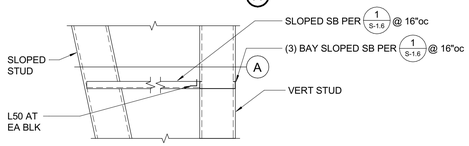

13 SKEWED & SLOPED WALL INTERSECTION
3/4" = 1'-0"

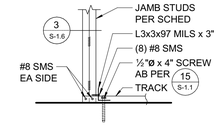

B AT INT OR EXT DOOR < 8'-0" WIDE

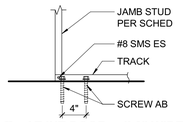

A AT INT DOOR < 4'-0" WIDE

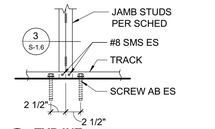

C TYP INT

FOR INFORMATION NOT NOTED SEE 3 S-1.4

8 EXTERIOR JAMB BASE
1" = 1'-0"

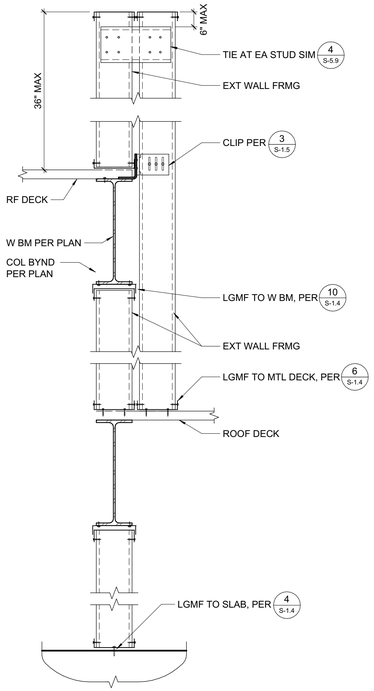

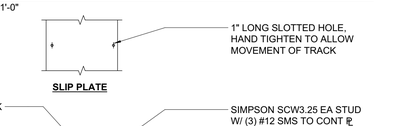

10 SLOPED NON BEARING WALL
1" = 1'-0"

9 TYPICAL SECTION AT MECHANICAL PIT
1" = 1'-0"

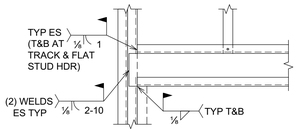

C WELDED CONNECTION

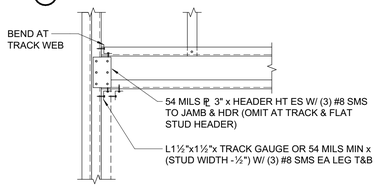

B ALT SCREWED CONNECTION

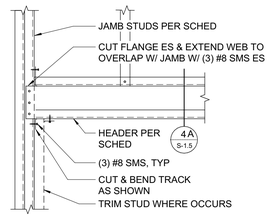

A SCREWED CONNECTION

5 TYPICAL HEADER CONNECTION
1" = 1'-0"

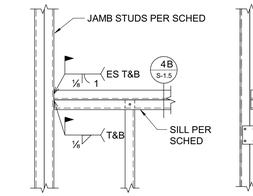

A WELDED CONNECTION

B ALT CONNECTION

6 TYPICAL SILL CONNECTION
1" = 1'-0"

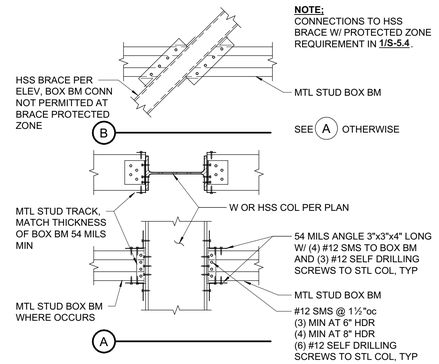

7 BOX HEADER CONN TO STEEL FRAMING
1" = 1'-0"

Per ESR 2409, slot is 2" long, with fastener at center can accommodate 1" drift. Verify with building drift demand. TYP

Clarify horizontal slot length and verify with drift demand. TYP

CLIP	CONN TO STUD	CONN TO ABV	MIN JAMB STUD THICKNESS	NOTES
STL NETWORK DSL CLIP (ESR-2049)	(3) #12	(3) #12	43 MILS	
4"x2"x97MILSx4" CLIP W/ ¼"x2" VSH AND HSH	(2) #12	(2) #12	43 MILS	

NOTE: PROVIDE CLIP ES JAMB STUD AT ALL OPENING GREATER THAN 4'-0"

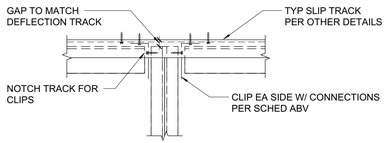

1 INTERIOR JAMB STUD DEFLECTION TRACK
1 1/2" = 1'-0"

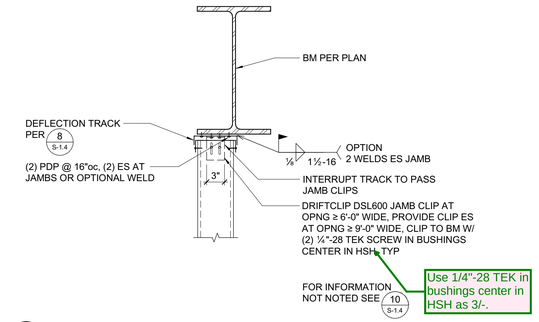

2 ATTACHMENT OF JAMB STUDS TO STEEL BEAM
1" = 1'-0"

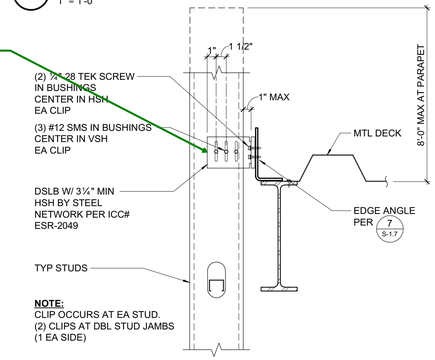

3 EXTERIOR WALL
1 1/2" = 1'-0"

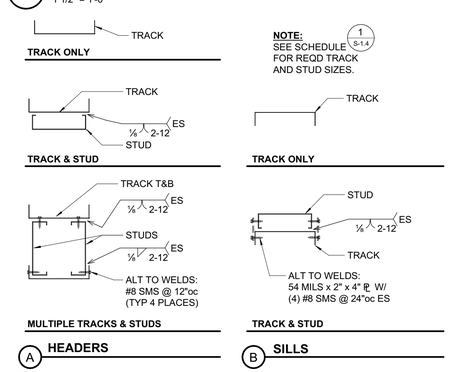

A HEADERS

B SILLS

4 TYPICAL NON-BEARING HEADERS AND SILLS
1 1/2" = 1'-0"

QUATTROCCHI KWOK ARCHITECTS
Main Office:
636 Fifth Street, Santa Rosa, CA 95404
Pleasanton Office:
600 Main Street, Suite E,
Pleasanton, CA 94566
(707) 576-0829

ZFA STRUCTURAL ENGINEERS
1212 fourth street | suite z — zfa.com
santa rosa ca 95404 — 707.526.0992
zfa job no. 18254

copyright © 2019



THIS DOCUMENT AND THE IDEAS INCORPORATED HEREIN, AS AN INSTRUMENT OF PROFESSIONAL SERVICE, IS THE PROPERTY OF THE ENGINEER AND IS NOT TO BE USED, IN WHOLE OR IN PART FOR ANY OTHER PROJECT WITHOUT THE PRIOR WRITTEN AUTHORIZATION OF THE ENGINEER.

FREEDOM HIGH SCHOOL

PERFORMING ARTS AND CTE FACILITIES

1050 NEROLY RD
OAKLEY, CA 94561

LIBERTY UNION HIGH SCHOOL DISTRICT

ZFA NO:	18254
ENGR / PM:	NBB / MJR / AIZ
DRAWING SCALE:	As indicated
PTN:	61721-0068

BID SET

AUGUST 13, 2019

SHEET TITLE

TYPICAL METAL STUD CONNECTION DETAILS

SHEET NUMBER

S-1.5

C:\revit_local\18254_FREEDOM HS PAC_S19C_nkb@zfa.com.rvt
8/5/2019 1:50:06 PM

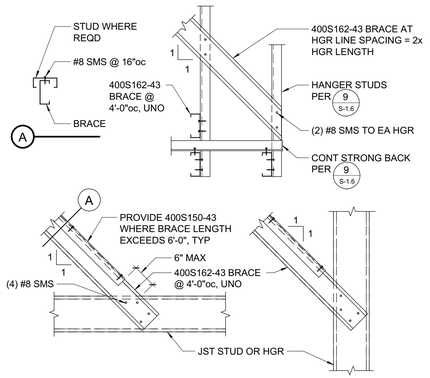

11 TYPICAL BRACE CONNECTIONS
1" = 1'-0"

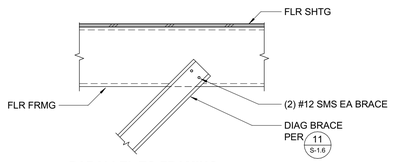

PARALLEL TO FRAMING

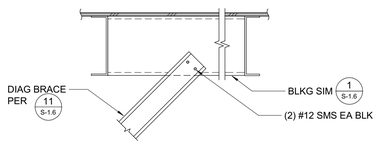

PERPENDICULAR TO FRAMING

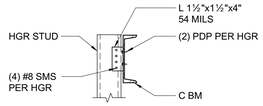

MAX WT PER HGR = 200#

12 HANGERS & BRACES TOP CONNECTION
1" = 1'-0"

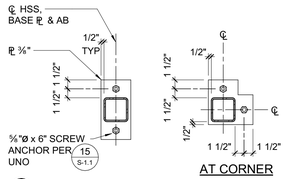

B

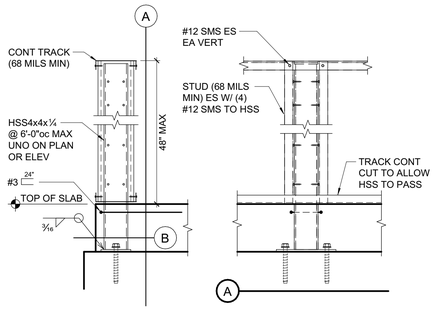

8 TYPICAL SECTION AT INTERIOR PARTIAL HEIGHT WALL
1" = 1'-0"

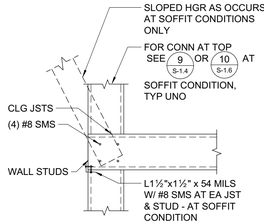

OPTIONAL ATTACHMENTS

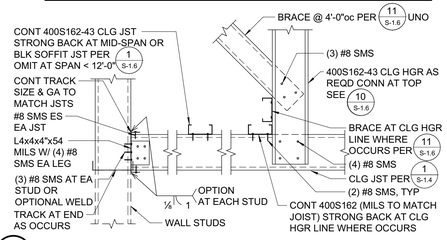

9 TYPICAL CEILING/SOFFIT JOIST FRAMING
1" = 1'-0"

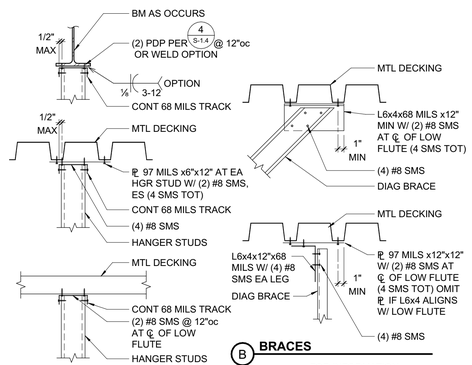

A **HANGER STUDS**
MAX LOAD PER HANGER = 100#

B **BRACES**
FOR INFORMATION NOT NOTED SEE 1 S-1.4

10 HANGERS & BRACES TOP CONNECTION
1" = 1'-0"

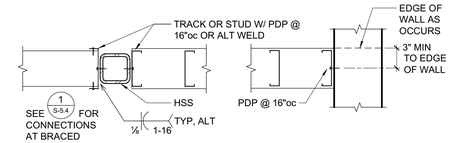

AT HSS COL OR BRACE **AT CONC WALL**

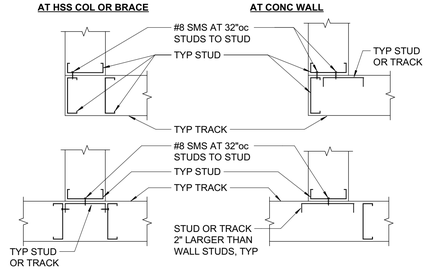

4 TYPICAL CORNERS AND INTERSECTIONS
1" = 1'-0"

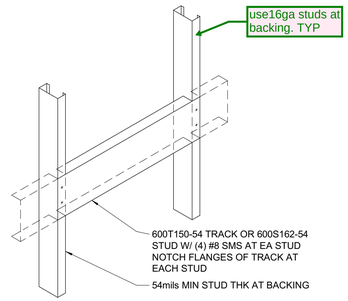

5 WALL BACKING PLATE
1" = 1'-0"

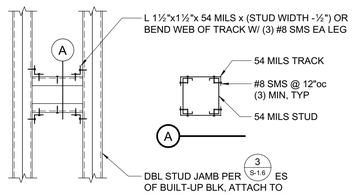

6 HEAVY DUTY WALL BACKING PLATE
1" = 1'-0"

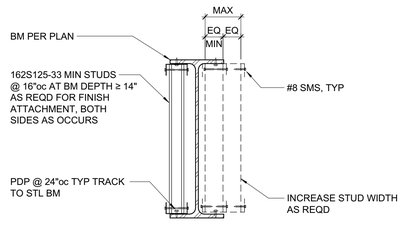

7 INFILL AT STEEL BEAM
1 1/2" = 1'-0"

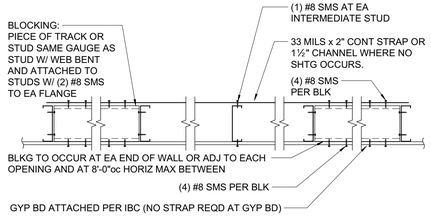

OPTION 2

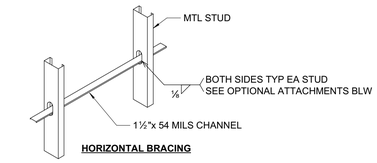

HORIZONTAL BRACING

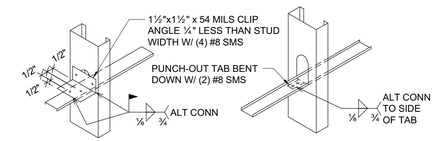

OPTIONAL ATTACHMENT A **OPTIONAL ATTACHMENT B**

OPTION 1

NOTES:
1. BRIDGING MAY BE PER OPTION 1 OR 2.
2. PROVIDE BRIDGING @ 4'-0"oc.
3. BRIDGING IS NOT REQUIRED WHERE PROPERLY ATTACHED SHEATHING OCCURS ON BOTH SIDES OF STUDS.
4. THE MAX STUD DEPTH FOR OPTION 1 IS 8" MAX.
5. PROVIDE BLOCKING PER OPTION 2 AT LOCATIONS INDICATED ON DRAWINGS OR OTHER DETAILS

1 WALL BRIDGING/BLOCKING
1" = 1'-0"

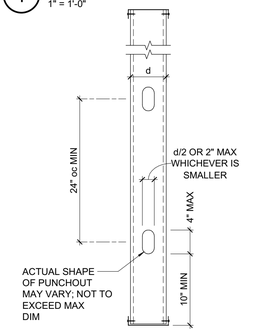

TYP STUD/TRACK PUNCHOUT

2 TYPICAL STUD PUNCHOUT
1" = 1'-0"

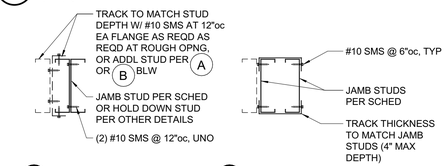

A **WELDED CONNECTION (PLAN VIEW)**

B **ALT CONNECTION (PLAN VIEW)**

3 TYPICAL MULTIPLE STUD CONNECTION
1 1/2" = 1'-0"

QUATTROCCHI KWOK ARCHITECTS
Main Office:
636 Fifth Street, Santa Rosa, CA 95404
Pleasanton Office:
600 Main Street, Suite E,
Pleasanton, CA 94566
(707) 576-0829

ZFA STRUCTURAL ENGINEERS
1212 fourth street | suite z **zfa.com**
santa rosa ca 95404 **707.526.0992**
zfa job no. 18254 **copyright © 2019**



THIS DOCUMENT AND THE IDEAS INCORPORATED HEREIN, AS AN INSTRUMENT OF PROFESSIONAL SERVICE, IS THE PROPERTY OF THE ENGINEER AND IS NOT TO BE USED, IN WHOLE OR IN PART FOR ANY OTHER PROJECT WITHOUT THE PRIOR WRITTEN AUTHORIZATION OF THE ENGINEER.

FREEDOM HIGH SCHOOL

PERFORMING ARTS AND CTE FACILITIES

1050 NEROLY RD
OAKLEY, CA 94561

LIBERTY UNION HIGH SCHOOL DISTRICT

ZFA NO:	18254
ENGR / PM:	NBB / MJR / AIZ
DRAWING SCALE:	As indicated
PTN:	61721-0068

BID SET

AUGUST 13, 2019

SHEET TITLE

TYPICAL METAL STUD SOFFIT & MISCELLANEOUS DETAILS

SHEET NUMBER

S-1.6

C:\revit_local\18254_FREEDOM HS PAC_S18C_nkbi@zfa.com.rvt
8/5/2019 1:50:09 PM

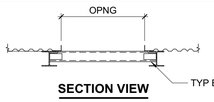

SECTION VIEW

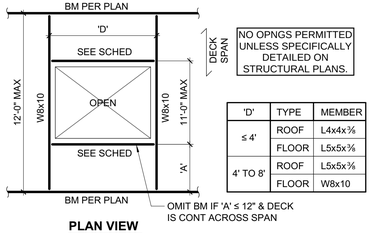

'D'	TYPE	MEMBER
≤ 4'	ROOF	L4x4x⅜
	FLOOR	L5x5x⅝
4' TO 8'	ROOF	L5x5x⅝
	FLOOR	W8x10

PLAN VIEW

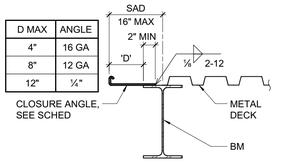

D MAX	ANGLE
4"	16 GA
8"	12 GA
12"	¼"

UNTOPPED DECK AT OPENING

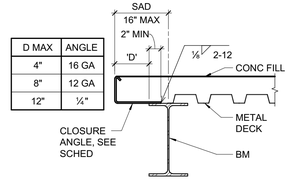

D MAX	ANGLE
4"	16 GA
8"	12 GA
12"	¼"

TOPPED DECK AT OPENING

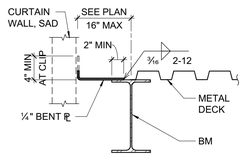

UNTOPPED DECK AT CURTAIN WALL

11 TYPICAL FRAMED OPENING IN DECK (LESS THAN 11'-0")
1" = 1'-0"

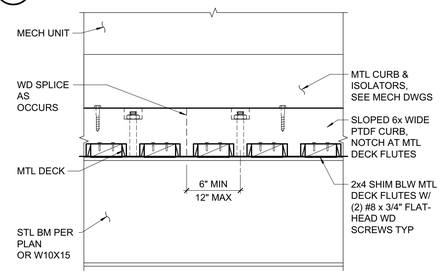

CURB PERPENDICULAR TO FLUTES

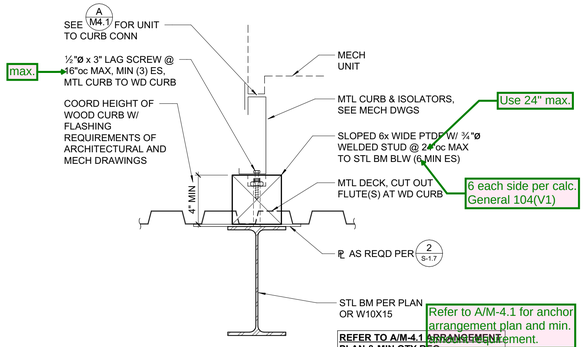

CURB PARALLEL TO FLUTES

12 MECHANICAL UNIT CURB SUPPORT
1 1/2" = 1'-0"

LOCATION	DECK TYPE	CONNECTION AT PERPENDICULAR SUPPORT	CONNECTION AT PARALLEL SUPPORT	SIDELAP FASTENER
CANOPY ROOF	AEP SPAN HR-36 - 20GA	TEKS 36/5 NORMAL	TEKS @ 12"oc	TEKS @ 12"oc

1. ABOVE REFERENCED DECKS ARE BASED ON ALLOWABLE DESIGN LOADS PER IAPMO ER-0550 ASC PROFILES LLC WEST SACRAMENTO, CA - EQUIVALENT DECK MUST HAVE EQUIVALENT ALLOWABLE LOADS.
2. SCREWS FOR DECK TO DECK SEAM FASTENING SHALL BE No. 12-14 x ¾" TEKS 1. SCREWS FOR DECK SUPPORT FASTENING SHALL BE ONE OF THE FOLLOWING:

FASTENER DESCRIPTION	SUPPORT THICKNESS
#12-14 x ¾" TEKS 3	16 GAGE TO ⅜"
#12-24 x ⅞" TEKS 4	⅛" TO ¼"
#12-24 x 1¼" TEKS 5	⅛" TO ½"

3. SEE ICC-ES ER-3056 AND ESR-1976 FOR ADDITIONAL DETAILS ON TEKS SCREWS.
4. DECK SUPPORT FASTENER PATTERNS ARE AS DESCRIBED IN (A).
5. FIVE SCREWS USED FOR "NORMAL" HR-36.

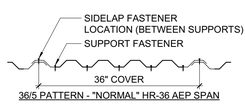

A TEKS FASTENER PATTERN FOR HR-36 AEP SPAN

13 ENTRY CANOPY DECKING SCHEDULE
3/4" = 1'-0"

7 TYPICAL EDGE OF DECK
1" = 1'-0"

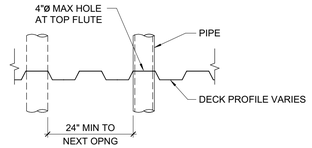

8 TYPICAL UNREINFORCED OPENING IN DECK (≤ 4")
3/4" = 1'-0"

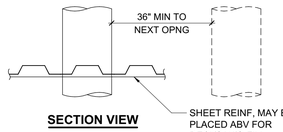

SECTION VIEW

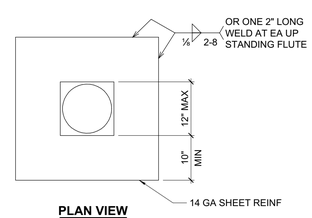

PLAN VIEW

9 TYPICAL REINFORCED OPENING IN DECK (LESS THAN 12")
3/4" = 1'-0"

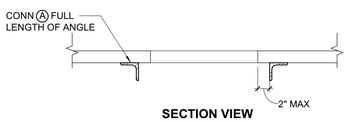

SECTION VIEW

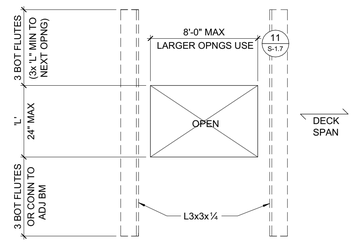

PLAN VIEW

10 TYPICAL REINFORCED OPENING IN DECK (LESS THAN 24")
1" = 1'-0"

MARK	STEEL DECK GAGE & PROFILE TYPE SEE 5 S-1.7	DECK CONNECTIONS						REMARKS
		END/INT BEARING CONN (A)		SIDE BEARING CONN (B)		SIDELAP CONNECTION (C)		
		SIZE & TYPE	PATTERN	SIZE & TYPE	SPACING	SIZE & TYPE	SPACING	
1	A - 18 GA	PINS	36/4	PINS	12"	VSC2	12"	BLDG A - HIGH & LOW ROOF
2	B - 18 GA	¾"ø PW	24/3	¾"ø PW	12"	1½" ASW	12"	BLDG A - LOBBY ROOF
3	A - 18 GA	¾"ø PW	36/4	¾"ø PW	12"	1½" TSW	12"	2" CONC MIN W/ #3 @ 16"oc EW AT MID HEIGHT 3½" TOT THICKNESS MIN (SINGLE SPAN OK)

NOTES:
1. ATTACH DECK TO ALL STEEL SUPPORT FRAMING AS OCCURS.
2. PW = PUDDLE WELD WITH ½"ø MIN OF FUSION (EFFECTIVE WELD).
3. TSW = TOP SEAM WELD (⅛" FILLET).
4. ASW = ARC SEAM WELD.
5. VSC2 = VERCO SIDE LAP CONNECTION.
6. PINS = HILTI X-ENP-19 PER ICC ESR-2197 AND ESR-2776.
7. ABOVE REFERENCED DECKS ARE BASED ON ALLOWABLE DESIGN LOADS PER IAPMO ER-0217 VERCO MANUFACTURING, ESR-2047 EPIC METAL DECK CORP - EQUIVALENT DECK MUST HAVE EQUIVALENT ALLOWABLE VERTICAL LOADS, DIAPHRAGM SHEAR VALUES, AND FLEXIBILITY FACTORS.
8. SINGLE SPAN NOT ALLOWED AT "A" DECK. AT CONTRACTOR'S OPTION, HEAVIER DECK MAY BE USED TO ALLOW SINGLE SPAN.
9. PROVIDE FULL WIDTH DECK SHEET ON EACH SIDE OF BEAMS IN THE SFRS, AND AT THE BUILDING PERIMETER.
10. ALL DECK TYPES TO RECEIVE CONCRETE FILL TO HAVE FACTORY PUNCHED VENT TABS.
11. PROVIDE EXTRA CONCRETE TOPPING TO PROVIDE FLAT LEVEL SURFACE, 1" MAX.

1 DECKING SCHEDULE
3/4" = 1'-0"

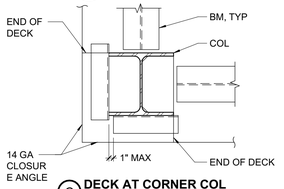

C DECK AT CORNER COL

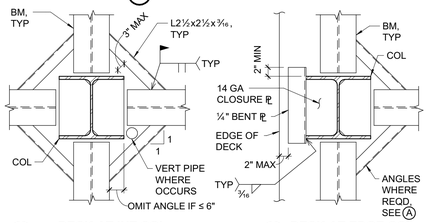

A DECK AT INT COL **B DECK AT EDGE COL**

4 TYPICAL DECK SUPPORT AT COLUMN
3/4" = 1'-0"

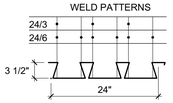

PROPERTIES	
F_y=40 ksi	
GAGE	I (in⁴/ft)
20 GA	1.75
18 GA	2.42
16 GA	3.11

TYPE "B" DECK
EPICORE ER3.5 OR APPROVED EQUAL

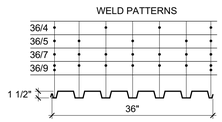

PROPERTIES	
F_y=38 KSI	
GAGE	I (in⁴/ft)
22 GA	0.175
20 GA	0.216
18 GA	0.302
16 GA	0.377

TYPE "A" DECK
VERCO PLB, HSB, OR APPROVED EQUAL

5 DECKING TYPE AND CONNECTION PATTERN
3/4" = 1'-0"

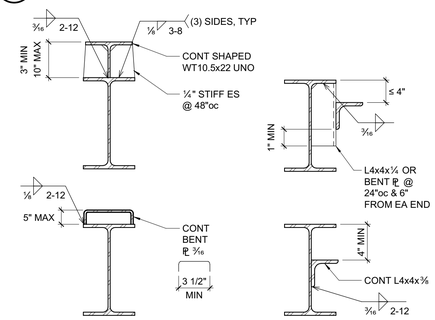

RAISED DECK **DEPRESSED DECK**

6 TYPICAL RAISED AND DEPRESSED DECK SUPPORT
1 1/2" = 1'-0"

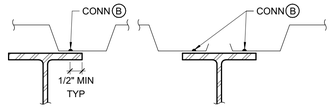

DECK PARALLEL TO BEAM

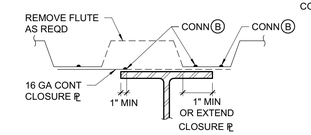

SPLIT DECK AT PARALLEL BEAM

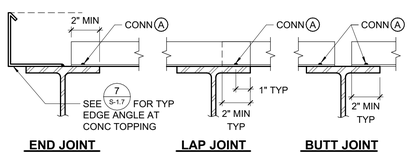

END JOINT **LAP JOINT** **BUTT JOINT**

DECK PERPENDICULAR TO BEAM

A WELDING (OR OTHER DECK FASTENING)

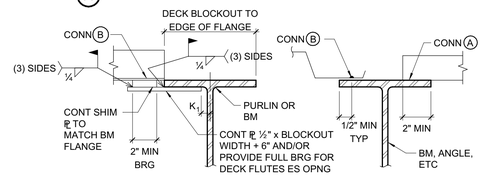

END BEARING AT BLOCKOUT (18" MAX) **CHANGE IN DIRECTION**

NOTES:
1. WELD OR DECK FASTENERS PER SCHEDULE. FOR DECKING SCHEDULE SEE 1/S-1.7 . AS SHOWN IN THIS DETAIL, PROVIDE ARC SEAM WELD "⌓" AT SAME SPACING AS ARC SPOT WELD "◯" PER 1/S-1.7

2 TYPICAL STEEL DECK SUPPORT AND WELDING
3/4" = 1'-0"

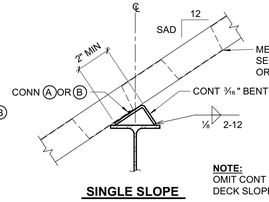

SINGLE SLOPE

NOTE:
OMIT CONT BENT ₱ WHERE DECK SLOPE < ½" PER 12"

B SLOPED DECK

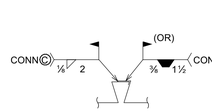

EPICORE DECK:
LAYOUT DECK SHEETS SO THAT SIDE SPLICES OCCUR ONLY AT SEAMED EDGES, AS SHOWN

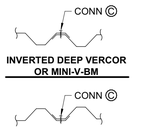



RIBBED DECK:
CRIMP BEFORE WELDING

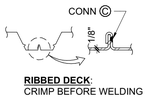

RIBBED DECK:
CRIMP BEFORE WELDING

NOTE:
BUTTON PUNCH AND VERCO SIDE LAP CONN NOT SHOWN.

3 TYPICAL DECK SIDE LAP CONNECTION
3" = 1'-0"

QUATTROCCHI KWOK ARCHITECTS
Main Office:
636 Fifth Street, Santa Rosa, CA 95404
Pleasanton Office:
600 Main Street, Suite E,
Pleasanton, CA 94566
(707) 576-0829

ZFA STRUCTURAL ENGINEERS
1212 fourth street | suite z **zfa.com**
santa rosa ca 95404 **707.526.0992**
zfa job no. 18254

copyright © 2019



THIS DOCUMENT AND THE IDEAS INCORPORATED HEREIN, AS AN INSTRUMENT OF PROFESSIONAL SERVICE, IS THE PROPERTY OF THE ENGINEER AND IS NOT TO BE USED, IN WHOLE OR IN PART FOR ANY OTHER PROJECT WITHOUT THE PRIOR WRITTEN AUTHORIZATION OF THE ENGINEER.

FREEDOM HIGH SCHOOL

PERFORMING ARTS AND CTE FACILITIES

1050 NEROLY RD
OAKLEY, CA 94561

LIBERTY UNION HIGH SCHOOL DISTRICT

ZFA NO:	18254
ENGR / PM:	NBB / MJR / AIZ
DRAWING SCALE:	As indicated
PTN:	61721-0068

BID SET

AUGUST 13, 2019

SHEET TITLE

TYPICAL METAL DECKING DETAILS

SHEET NUMBER

S-1.7

C:\revit_local\18254_FREEDOM HS PAC_S19C_mkb@zfa.com.rvt
8/5/2019 1:50:12 PM

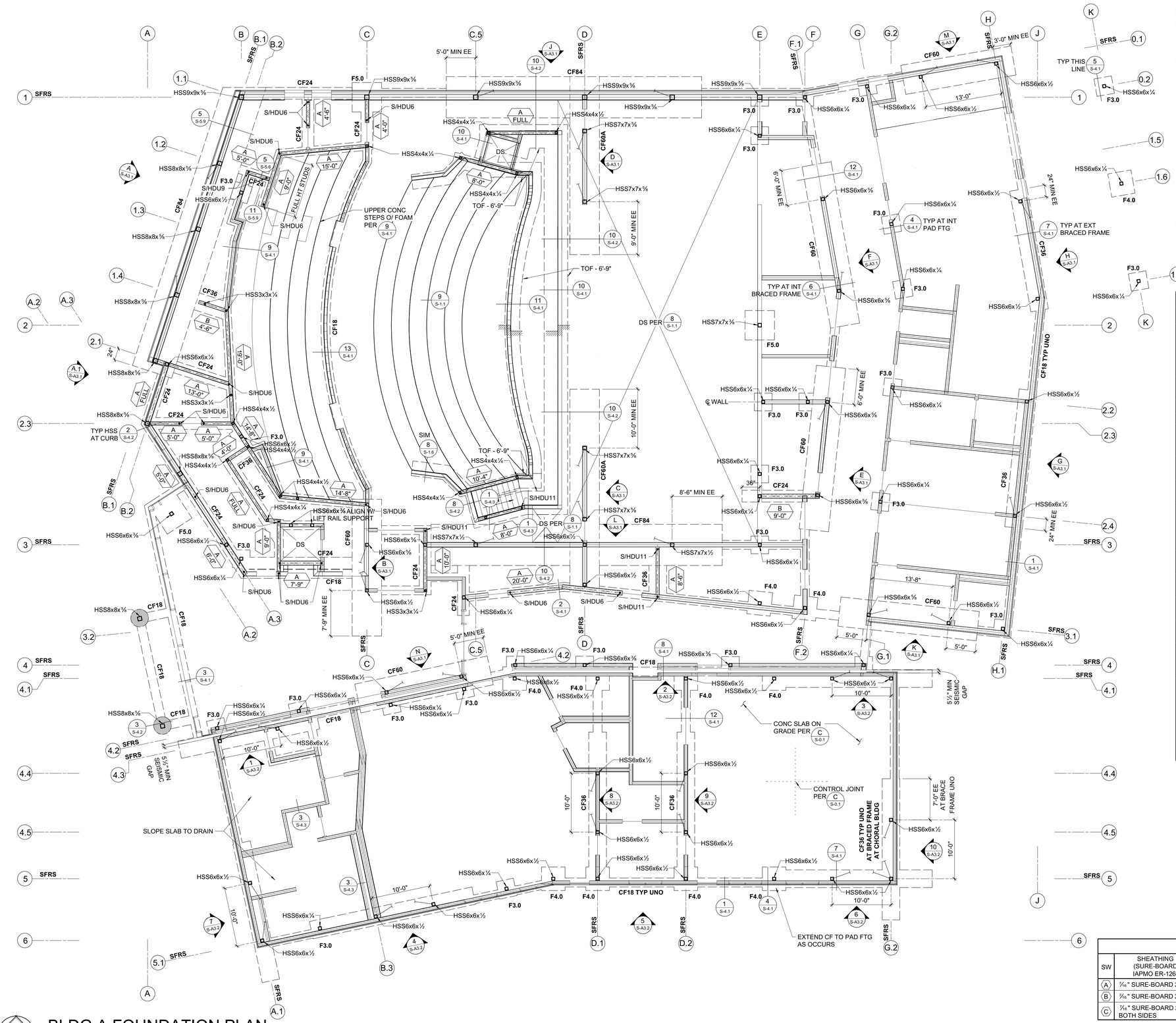

BLDG A FOUNDATION PLAN

1/8" = 1'-0"

NORTH

FOUNDATION PLAN NOTES:

1. REFER TO SHEETS **S-0.1** THRU **S-1.7**, **S-4.1** AND **S-4.2** FOR GENERAL NOTES AND TYPICAL DETAILS. THE FOLLOWING DETAIL REFERENCES ARE PROVIDED FOR THE CONTRACTOR'S CONVENIENCE ONLY. ALL GENERAL NOTES AND TYPICAL DETAILS NOTED ABOVE ARE APPLICABLE AND SHALL BE FOLLOWED.
2. COORDINATE ALL DIMENSIONS WITH ARCHITECTURAL DRAWINGS PRIOR TO CONSTRUCTION. NOTIFY ARCHITECT/ENGINEER OF ANY DISCREPANCIES.
3. EXTERIOR WALLS TO HAVE MINIMUM 6" TALL CURB. COORDINATE WITH ARCHITECTURAL DRAWINGS PRIOR TO CONSTRUCTION. NOTIFY ARCHITECT/ENGINEER OF ANY DISCREPANCIES.
4. PLUMBING AND ELECTRICAL CONDUIT AND GROUND STRAP SHALL NOT BE LAID WITHIN FOUNDATIONS. NO UTILITY PIPES OR CONDUITS SHALL BE LOCATED THRU COLUMN FOOTINGS OR FRAME FOOTINGS. NO VERTICAL OR HORIZONTAL PIPES OR CONDUITS SHALL BE LOCATED THROUGH STEEL FRAMES, STEEL COLUMNS, OR STEEL BASE PLATES. PROVIDE FURRING AND/OR THICKENED CONCRETE WHERE REQUIRED TO CLEAR UTILITY SYSTEMS. NOTIFY STRUCTURAL ENGINEER/ARCHITECT PRIOR TO ANY INSTALLATION NOT CONFORMING TO THESE DETAILS.

   PIPES THROUGH FOOTINGS SHALL BE PER **2/S-1.1** AND **3/S-1.1**.

   PIPES PARALLEL TO FOOTINGS SHALL BE PER **4/S-1.1**.

   PIPES AT SLAB ON GRADE SHALL BE PER **7/S-1.1**.
5. SEISMIC GAPS WHERE NOTED ARE DIMENSIONED CLEAR BETWEEN WALL FINISHES. THIS GAP TO BE MAINTAINED ENTIRELY CLEAR TO ALLOW FOR DIFFERENTIAL BUILDING MOVEMENT. NO PIPES, CONDUITS, ETCETERA SHALL BE LOCATED WITHIN THE GAP. PROVIDE FLEXIBLE COUPLINGS AT ALL UTILITIES CROSSING SEISMIC GAPS.
6. ELEVATION OF THE TOP OF FINISHED SLAB = 0'-0", UNLESS NOTED OTHERWISE.

PLAN LEGEND

SYMBOL	REFERENCE DETAIL	DESCRIPTION
	1/S-1.4 1/S-5.5 I/S-0.2	INDICATES COLD FORMED STEEL WALL.
	H/S-0.2	INDICATES COLD FORMED SHEAR WALL.
		INDICATES STEEL COLUMN.
	6/S-5.5	INDICATES HD AT COLD FORMED SHEAR WALL.
	13/S-5.5	INDICATES HSS HD AT COLD FORMED SHEAR WALL
DS	8/S-1.1 9/S-1.1	INDICATES DEPRESSED SLAB, SEE ARCHITECTURAL AND PLUMBING DRAWINGS FOR COMPLETE LOCATIONS, DEPTH AND SLOPE INFORMATION.
		INDICATES FOUNDATION.
CF24		INDICATES CONTINUOUS FOOTING SIZE AND REINFORCING PER SCHEDULE.
F2.0		INDICATES PAD FOOTING SIZE AND REINFORCING PER SCHEDULE.
88		INDICATES GRIDLINE AT CENTERLINE OF COLUMN.
	8/S-1.1 9/S-1.1	INDICATES STEP IN ELEVATION, SEE ARCHITECTURAL DRAWINGS.
1 S3.1		INDICATES ELEVATION.
		INDICATES BRACED FRAME ABOVE.
SFRS	G/S-0.2	INDICATES SEISMIC FORCE RESISTING SYSTEM.
A 10'-0"	H/S-0.2	INDICATES SHEAR WALL TYPE AND MINIMUM WALL LENGTH. SYMBOL LOCATION INDICATES SHEATHED FACE OF WALL UNLESS NOTED OTHERWISE.
TOF - 11"	C/S-0.1	INDICATES TOP OF FOOTING RELATIVE TO 0'-0". TOP OF FOOTING SHALL BE -11", UNLESS NOTED OTHERWISE. TOP OF FOOTING ELEVATIONS ARE TO BE COORDINATED BY THE CONTRACTOR UTILIZING THE STRUCTURAL, CIVIL, GEOTECHNICAL, AND LANDSCAPE DRAWINGS. ANY DISCREPANCIES ARE TO BE BROUGHT TO THE ATTENTION OF THE ARCHITECT/ENGINEER SO CLARIFICATION CAN BE MADE PRIOR TO CONSTRUCTION.

CONTINUOUS FOOTING SCHEDULE

MARK	'b'	'd'	REINF 'a'	NOTES
CF18	18"	24"	(2) #5 T&B	TRANSVERSE #3 @ 18"oc T&B
CF24	24"	24"	(3) #5 T&B	TRANSVERSE #3 @ 18"oc T&B
CF36	36"	24"	(5) #9 T&B	TRANSVERSE #5 @ 18"oc T&B
CF60	60"	30"	(5) #9 T&B	TRANSVERSE #6 @ 18"oc T&B
CF60A	60"	60"	(4) #10 TOP & (9) #10 BOT	TRANSVERSE #5 @ 12"oc T&B
CF84	84"	42"	(7) #10 TOP & (12) #11 BOT	TRANSVERSE #5 @ 12"oc T&B

PAD FOOTING SCHEDULE

MARK	SIZE	REINFORCING
F3.0	3'-0" SQ x 24" DEEP	(5) #5 T&B EW
F4.0	4'-0" SQ x 24" DEEP	(6) #5 T&B EW
F5.0	5'-0" SQ x 24" DEEP	(8) #5 T&B EW

METAL STUD SHEAR WALL SCHEDULE

SW	SHEATHING (SURE-BOARD IAPMO ER-126)	EDGE SCREW SPACING (PES)	ANCHORAGE: AT FOUNDATION ½"ø SCREW AB	ANCHORAGE: AT FRAMING	REMARKS
A	⅛" SURE-BOARD 200	#8 @ 6"oc	32"oc	(2) #8 @ 8"oc	54mil DBL STUDS AT WALL ENDS & 54mil BOT TRACK
B	⅛" SURE-BOARD 200	#8 @ 4"oc	24"oc	(2) #8 @ 6"oc	
C	⅛" SURE-BOARD 200 BOTH SIDES	#8 @ 6"oc	16"oc	N/A	

QUATTROCCHI KWOK ARCHITECTS
Main Office:
636 Fifth Street, Santa Rosa, CA 95404
Pleasanton Office:
600 Main Street, Suite E,
Pleasanton, CA 94566
(707) 576-0829

ZFA STRUCTURAL ENGINEERS
1212 fourth street | suite z — zfa.com
santa rosa ca 95404 — 707.526.0992
zfa job no. 18254

copyright © 2019

REGISTERED PROFESSIONAL ENGINEER — CHRIS S. WARNER — No. 54813 — STRUCTURAL — STATE OF CALIFORNIA

THIS DOCUMENT AND THE IDEAS INCORPORATED HEREIN, AS AN INSTRUMENT OF PROFESSIONAL SERVICE, IS THE PROPERTY OF THE ENGINEER AND IS NOT TO BE USED, IN WHOLE OR IN PART FOR ANY OTHER PROJECT WITHOUT THE PRIOR WRITTEN AUTHORIZATION OF THE ENGINEER.

FREEDOM HIGH SCHOOL

PERFORMING ARTS AND CTE FACILITIES

1050 NEROLY RD
OAKLEY, CA 94561

LIBERTY UNION HIGH SCHOOL DISTRICT

ZFA NO:	18254
ENGR / PM:	NBB / MJR / AIZ
DRAWING SCALE:	As indicated
PTN:	61721-0068

BID SET

AUGUST 13, 2019

SHEET TITLE

BLDG A FOUNDATION PLAN

SHEET NUMBER

S-A2.1

C:\revit_local\18254_FREEDOM HS PAC_S18C_nikb@zfa.com.rvt
8/5/2019 1:50:50 PM

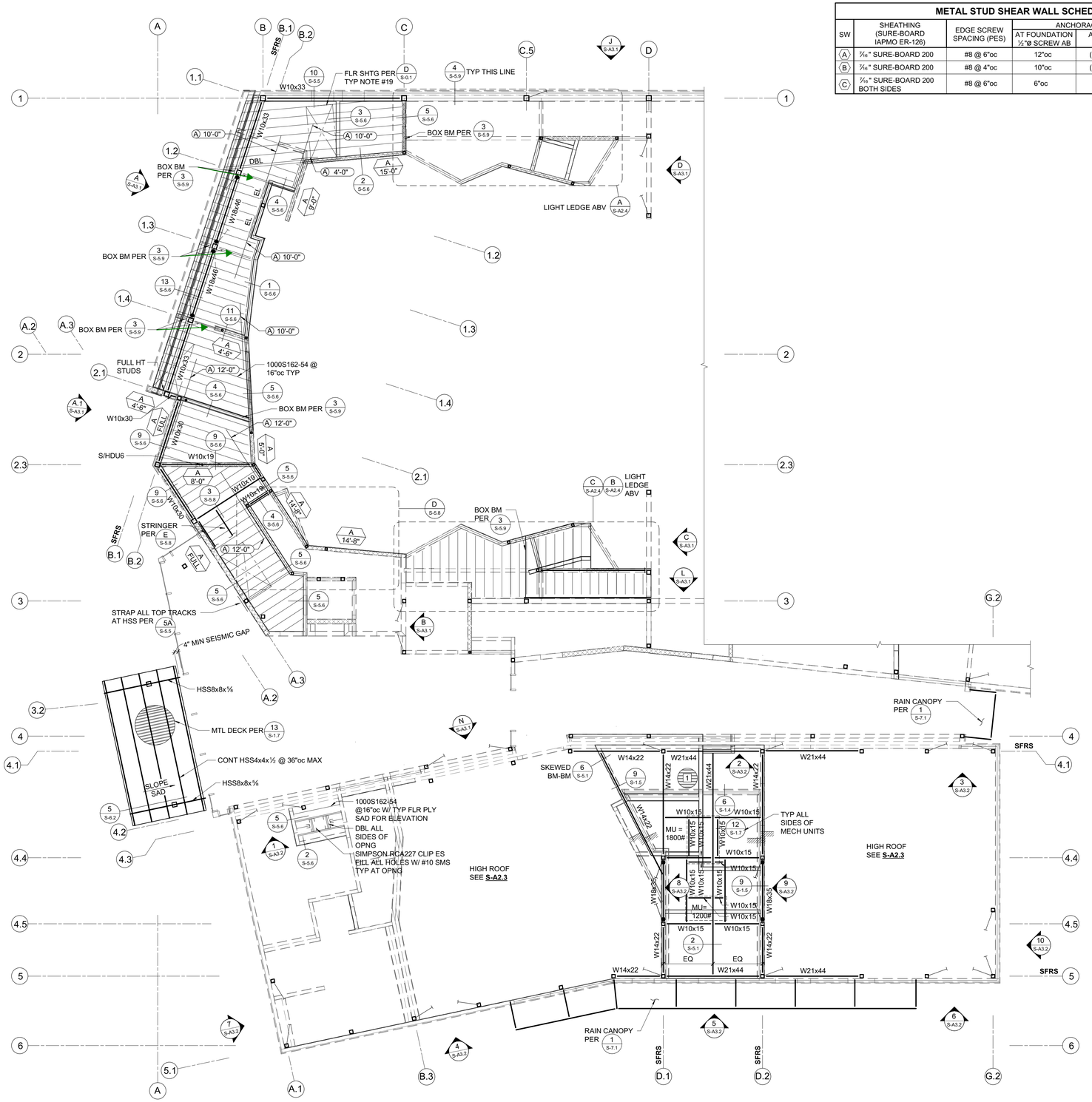

NORTH

BLDG A CONTROL ROOM FRAMING PLAN

1/8" = 1'-0"

METAL STUD SHEAR WALL SCHEDULE					
SW	SHEATHING (SURE-BOARD IAPMO ER-126)	EDGE SCREW SPACING (PES)	ANCHORAGE		REMARKS
			AT FOUNDATION ½"⌀ SCREW AB	AT FRAMING	
(A)	7/16" SURE-BOARD 200	#8 @ 6"oc	12"oc	(2) #8 @ 8"oc	54 MIL DBL STUDS AT WALL ENDS
(B)	7/16" SURE-BOARD 200	#8 @ 4"oc	10"oc	(2) #8 @ 6"oc	
(C)	7/16" SURE-BOARD 200 BOTH SIDES	#8 @ 6"oc	6"oc	N/A	

FRAMING PLAN NOTES:

1. REFER TO SHEETS **S-0.1** THRU **S-1.7** AND **S-5.1** THRU **S-5.8** FOR GENERAL NOTES AND TYPICAL DETAILS. THE FOLLOWING DETAIL REFERENCES ARE PROVIDED FOR THE CONTRACTOR'S CONVENIENCE ONLY. ALL GENERAL NOTES AND TYPICAL DETAIL SHEETS NOTED ABOVE ARE APPLICABLE AND SHALL BE FOLLOWED.
2. COORDINATE ALL DIMENSIONS WITH ARCHITECTURAL DRAWINGS PRIOR TO CONSTRUCTION. NOTIFY ARCHITECT/ENGINEER OF ANY DISCREPANCIES.
3. NO VERTICAL OR HORIZONTAL PIPES OR CONDUITS SHALL BE LOCATED THROUGH STEEL FRAMING, COLUMNS, OR BASE PLATES. PROVIDE FURRING WHERE REQUIRED TO CLEAR UTILITY SYSTEMS. NOTIFY ARCHITECT/ENGINEER PRIOR TO ANY INSTALLATION NOT CONFORMING TO THESE RESTRICTIONS.
4. FIRE PROTECTION SYSTEM SUPPORTS TO BE LOCATED TO MAINTAIN A MAXIMUM OF (2) 500 LB MAX POINT LOADS WITH 15'-0" MINIMUM SEPARATION TO ANY STEEL BEAM. NO SUPPORTS TO BE HUNG FROM METAL DECKING.
5. SEE ARCHITECTURAL DRAWINGS FOR EDGE OF SLAB, FACE OF WALL, ETCETERA.
6. SEE ARCHITECTURAL DRAWINGS FOR TOP OF SLAB OR TO TOP OF STEEL ELEVATION.
7. BEAM CENTERLINES TO ALIGN WITH COLUMN CENTERLINES, UNLESS NOTED OTHERWISE.
8. BEAMS TO BE EQUALLY SPACED IN EACH BAY, UNLESS NOTED OTHERWISE.
9. SEISMIC GAPS WHERE NOTED ARE DIMENSIONED CLEAR BETWEEN WALL FINISHES. THIS GAP TO BE MAINTAINED ENTIRELY CLEAR TO ALLOW FOR DIFFERENTIAL BUILDING MOVEMENT. NO PIPES, CONDUITS, ETCETERA SHALL BE LOCATED WITHIN THE GAP. PROVIDE FLEXIBLE COUPLINGS AT ALL UTILITIES CROSSING SEISMIC GAPS.

PLAN LEGEND		
SYMBOL	REFERENCE DETAIL	DESCRIPTION
88		INDICATES GRIDLINE AT CENTERLINE OF COLUMN.
□		INDICATES STEEL COLUMN.
W16x26		INDICATES BEAM SIZE. WHERE NO CAMBER IS SPECIFIED FABRICATE BEAM WITH NATURAL CAMBER UP.
□⊢	5/S-5.2	INDICATES "T" PLATE BEAM CONNECTION TO COLUMN.
▷	10/S-5.1	INDICATES NON-FRAME MOMENT RESISTING CONNECTION.
●	2/S-5.1	INDICATES SEISMIC FORCE RESISTING SYSTEM COLLECTOR CONNECTION, PROVIDE DOUBLE ROW OF BOLTS AT CONNECTION PER TYPICAL DETAILS.
		INDICATES BRACED FRAME ABOVE.
		INDICATES BRACED FRAME BELOW.
BRACE	9/S-5.1	INDICATES DIAGONAL BRACE CONNECTED TO BOTTOM FLANGE OF BEAM (TRUSS BOTTOM CHORD). HEAD OF ARROW INDICATES THE UPPER CONNECTION. SPACE BRACES EQUALLY UNLESS NOTED OTHERWISE.
		INDICATES LEDGER. SEE PLAN FOR SIZE AND ANCHORAGE.
1	1/S-1.7	INDICATES METAL DECK AND DIRECTION OF DECK SPAN.
	1/S-1.4	INDICATES COLD FORMED STEEL WALL.
		INDICATES COLD FORMED STEEL SHEAR WALL ABOVE.
MU 1,000#	12/S-1.7	INDICATES APPROXIMATE LOCATION, SIZE AND MAXIMUM WEIGHT OF MECHANICAL UNIT. SEE MECHANICAL DRAWINGS FOR ANCHORAGE AND ADDITIONAL INFORMATION.
S3.1		INDICATES ELEVATION.
	6/S-5.5 9/S-5.5 11/S-5.5	INDICATES HD AT COLD FORMED SHEAR WALL.
	13/S-5.5	INDICATES HSS HD AT COLD FORMED SHEAR WALL.
SFRS	G/S-0.2	INDICATES SEISMIC FORCE RESISTING SYSTEM.
		INDICATES STEP IN ELEVATION, SEE ARCHITECTURAL DRAWINGS.
(A) 4'-0"	12/S-5.5	INDICATES TIE STRAP, SEE SCHEDULE FOR STRAP, SCREWS AND TOTAL LENGTH.
A 10'-0"	H/S-0.2	INDICATES SHEAR WALL TYPE AND MINIMUM WALL LENGTH. SYMBOL LOCATION INDICATES SHEATHED FACE OF WALL UNLESS NOTED OTHERWISE.

TIE STRAP SCHEDULE						
MARK	STRAP	MIN. SCREWS ES OF ♦	MAX. SCREW SPACING (SEE NOTES #1 & #2)			MIN. END LENGTH (EL)
			CASE 1	CASE 2		
				EL	RL	
(A)	CS14	(13) #10	#10 @ 4"oc	FILL ALL HOLES	#10 @ 4"oc	16"
(B)	CMSTC16	(25) #10	#10 @ 2"oc	FILL ALL HOLES	#10 @ 3"oc	24"

1. CASE 1 APPLIES UNLESS END LENGTH (EL) IS NOTED ON PLANS. WHERE END LENGTH (EL) IS NOTED, SEE CASE 2.

QUATTROCCHI KWOK ARCHITECTS
Main Office:
636 Fifth Street, Santa Rosa, CA 95404
Pleasanton Office:
600 Main Street, Suite E,
Pleasanton, CA 94566
(707) 576-0829

ZFA STRUCTURAL ENGINEERS
1212 fourth street | suite z **zfa.com**
santa rosa ca 95404 **707.526.0992**
zfa job no. 18254

copyright © 2019

REGISTERED PROFESSIONAL ENGINEER — CHRIS S. WARNER — No. S4813 — STRUCTURAL — STATE OF CALIFORNIA

THIS DOCUMENT AND THE IDEAS INCORPORATED HEREIN, AS AN INSTRUMENT OF PROFESSIONAL SERVICE, IS THE PROPERTY OF THE ENGINEER AND IS NOT TO BE USED, IN WHOLE OR IN PART FOR ANY OTHER PROJECT WITHOUT THE PRIOR WRITTEN AUTHORIZATION OF THE ENGINEER.

FREEDOM HIGH SCHOOL

PERFORMING ARTS AND CTE FACILITIES

1050 NEROLY RD
OAKLEY, CA 94561

LIBERTY UNION HIGH SCHOOL DISTRICT

ZFA NO:	18254
ENGR / PM:	NBB / MJR / AIZ
DRAWING SCALE:	As indicated
PTN:	61721-0068

BID SET

AUGUST 13, 2019

SHEET TITLE

BLDG A CONTROL ROOM FRAMING PLAN

SHEET NUMBER

S-A2.2

C:\revit_local\18254_FREEDOM HS PAC_S18C_nkb@zfa.com.rvt

8/5/2019 1:50:53 PM

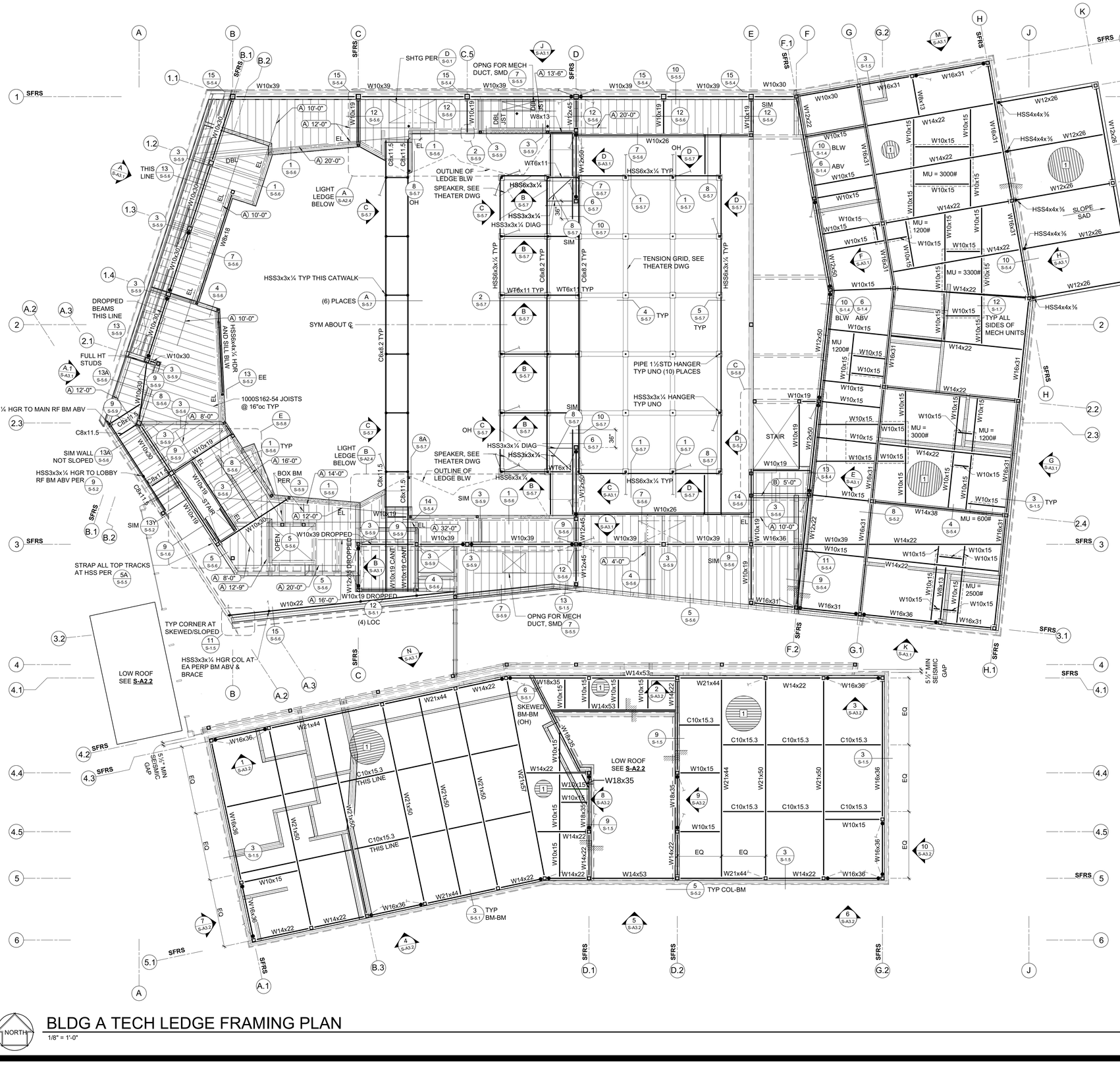

BLDG A TECH LEDGE FRAMING PLAN

1/8" = 1'-0"

NORTH

8/5/2019 1:50:55 PM

C:\revit_local\18254_FREEDOM HS PAC_S18C_nikb@zfa.com.rvt

FRAMING PLAN NOTES:

1. REFER TO SHEETS **S-0.1** THRU **S-1.7** AND **S-5.1** THRU **S-5.8** FOR GENERAL NOTES AND TYPICAL DETAILS. THE FOLLOWING DETAIL REFERENCES ARE PROVIDED FOR THE CONTRACTOR'S CONVENIENCE ONLY. ALL GENERAL NOTES AND TYPICAL DETAIL SHEETS NOTED ABOVE ARE APPLICABLE AND SHALL BE FOLLOWED.
2. COORDINATE ALL DIMENSIONS WITH ARCHITECTURAL DRAWINGS PRIOR TO CONSTRUCTION. NOTIFY ARCHITECT/ENGINEER OF ANY DISCREPANCIES.
3. NO VERTICAL OR HORIZONTAL PIPES OR CONDUITS SHALL BE LOCATED THROUGH STEEL FRAMING, COLUMNS, OR BASE PLATES. PROVIDE FURRING WHERE REQUIRED TO CLEAR UTILITY SYSTEMS. NOTIFY ARCHITECT/ENGINEER PRIOR TO ANY INSTALLATION NOT CONFORMING TO THESE RESTRICTIONS.
4. FIRE PROTECTION SYSTEM SUPPORTS TO BE LOCATED TO MAINTAIN A MAXIMUM OF (2) 500 LB MAX POINT LOADS WITH 15'-0" MINIMUM SEPARATION TO ANY STEEL BEAM. NO SUPPORTS TO BE HUNG FROM METAL DECKING.
5. SEE ARCHITECTURAL DRAWINGS FOR EDGE OF SLAB, FACE OF WALL, ETCETERA.
6. SEE ARCHITECTURAL DRAWINGS FOR TOP OF SLAB OR TO TOP OF STEEL ELEVATION.
7. BEAM CENTERLINES TO ALIGN WITH COLUMN CENTERLINES, UNLESS NOTED OTHERWISE.
8. BEAMS TO BE EQUALLY SPACED IN EACH BAY, UNLESS NOTED OTHERWISE.
9. SEISMIC GAPS WHERE NOTED ARE DIMENSIONED CLEAR BETWEEN WALL FINISHES. THIS GAP TO BE MAINTAINED ENTIRELY CLEAR TO ALLOW FOR DIFFERENTIAL BUILDING MOVEMENT. NO PIPES, CONDUITS, ETCETERA SHALL BE LOCATED WITHIN THE GAP. PROVIDE FLEXIBLE COUPLINGS AT ALL UTILITIES CROSSING SEISMIC GAPS.

PLAN LEGEND

SYMBOL	REFERENCE DETAIL	DESCRIPTION
88		INDICATES GRIDLINE AT CENTERLINE OF COLUMN.
□		INDICATES STEEL COLUMN.
W16x26		INDICATES BEAM SIZE. WHERE NO CAMBER IS SPECIFIED FABRICATE BEAM WITH NATURAL CAMBER UP.
□⊢	5/S-5.2	INDICATES "T" PLATE BEAM CONNECTION TO COLUMN.
▷	10/S-5.1	INDICATES NON-FRAME MOMENT RESISTING CONNECTION.
●	2/S-5.1	INDICATES SEISMIC FORCE RESISTING SYSTEM COLLECTOR CONNECTION. PROVIDE DOUBLE ROW OF BOLTS AT CONNECTION PER TYPICAL DETAILS.
		INDICATES BRACED FRAME ABOVE.
		INDICATES BRACED FRAME BELOW.
BRACE	9/S-5.1	INDICATES DIAGONAL BRACE CONNECTED TO BOTTOM FLANGE OF BEAM (TRUSS BOTTOM CHORD). HEAD OF ARROW INDICATES THE UPPER CONNECTION. SPACE BRACES EQUALLY UNLESS NOTED OTHERWISE.
		INDICATES LEDGER. SEE PLAN FOR SIZE AND ANCHORAGE.
1	1/S-1.7	INDICATES METAL DECK AND DIRECTION OF DECK SPAN.
	1/S-1.4	INDICATES COLD FORMED STEEL WALL.
		INDICATES COLD FORMED STEEL SHEAR WALL ABOVE.
MU 1,000#	12/S-1.7	INDICATES APPROXIMATE LOCATION, SIZE AND MAXIMUM WEIGHT OF MECHANICAL UNIT. SEE MECHANICAL DRAWINGS FOR ANCHORAGE AND ADDITIONAL INFORMATION.
S3.1		INDICATES ELEVATION.
	6/S-5.5 8/S-5.5 11/S-5.5	INDICATES HD AT COLD FORMED SHEAR WALL.
	13/S-5.5	INDICATES HSS HD AT COLD FORMED SHEAR WALL.
SFRS	G/S-0.2	INDICATES SEISMIC FORCE RESISTING SYSTEM.
		INDICATES STEP IN ELEVATION, SEE ARCHITECTURAL DRAWINGS.
A 4'-0"	12/S-5.5	INDICATES TIE STRAP, SEE SCHEDULE FOR STRAP, SCREWS AND TOTAL LENGTH.

TIE STRAP SCHEDULE

MARK	STRAP	MIN. SCREWS ES OF ♦	MAX. SCREW SPACING (SEE NOTES #1 & #2) CASE 1	CASE 2 EL	CASE 2 RL	MIN. END LENGTH (EL)
Ⓐ	CS14	(13) #10	#10 @ 4"oc	FILL ALL HOLES	#10 @ 4"oc	16"
Ⓑ	CMSTC16	(25) #10	#10 @ 2"oc	FILL ALL HOLES	#10 @ 3"oc	24"

1. CASE 1 APPLIES UNLESS END LENGTH (EL) IS NOTED ON PLANS. WHERE END LENGTH (EL) IS NOTED, SEE CASE 2.

QUATTROCCHI KWOK ARCHITECTS
Main Office:
636 Fifth Street, Santa Rosa, CA 95404
Pleasanton Office:
600 Main Street, Suite E,
Pleasanton, CA 94566
(707) 576-0829

ZFA STRUCTURAL ENGINEERS
1212 fourth street | suite z **zfa.com**
santa rosa ca 95404 **707.526.0992**
zfa job no. 18254

copyright © 2019

THIS DOCUMENT AND THE IDEAS INCORPORATED HEREIN, AS AN INSTRUMENT OF PROFESSIONAL SERVICE, IS THE PROPERTY OF THE ENGINEER AND IS NOT TO BE USED, IN WHOLE OR IN PART FOR ANY OTHER PROJECT WITHOUT THE PRIOR WRITTEN AUTHORIZATION OF THE ENGINEER.

FREEDOM HIGH SCHOOL

PERFORMING ARTS AND CTE FACILITIES

1050 NEROLY RD
OAKLEY, CA 94561

LIBERTY UNION HIGH SCHOOL DISTRICT

ZFA NO:	18254
ENGR / PM:	NBB / MJR / AIZ
DRAWING SCALE:	As indicated
PTN:	61721-0068

BID SET

AUGUST 13, 2019

SHEET TITLE

BLDG A TECH LEDGE/CATWALK AND LOW ROOF FRAMING PLAN

SHEET NUMBER

S-A2.3

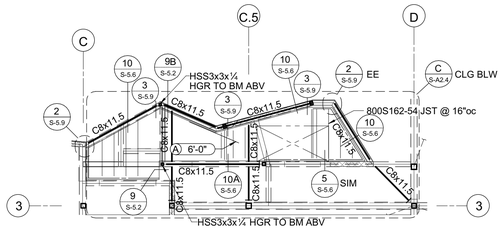

B SOUTH LIGHT LEDGE FRAMING PLAN
1/8" = 1'-0"

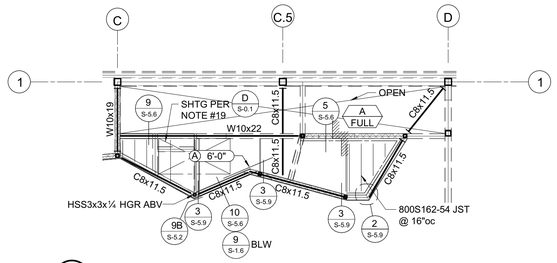

A NORTH LIGHT LEDGE FRAMING PLAN
1/8" = 1'-0"

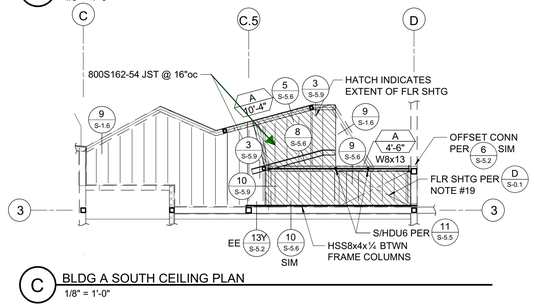

C BLDG A SOUTH CEILING PLAN
1/8" = 1'-0"

NORTH

BLDG A LOBBY ROOF FRAMING PLAN
1/8" = 1'-0"

FRAMING PLAN NOTES:

1. REFER TO SHEETS **S-0.1** THRU **S-1.7** AND **S-5.1** THRU **S-5.8** FOR GENERAL NOTES AND TYPICAL DETAILS. THE FOLLOWING DETAIL REFERENCES ARE PROVIDED FOR THE CONTRACTOR'S CONVENIENCE ONLY. ALL GENERAL NOTES AND TYPICAL DETAIL SHEETS NOTED ABOVE ARE APPLICABLE AND SHALL BE FOLLOWED.
2. COORDINATE ALL DIMENSIONS WITH ARCHITECTURAL DRAWINGS PRIOR TO CONSTRUCTION. NOTIFY ARCHITECT/ENGINEER OF ANY DISCREPANCIES.
3. NO VERTICAL OR HORIZONTAL PIPES OR CONDUITS SHALL BE LOCATED THROUGH STEEL FRAMING, COLUMNS, OR BASE PLATES. PROVIDE FURRING WHERE REQUIRED TO CLEAR UTILITY SYSTEMS. NOTIFY ARCHITECT/ENGINEER PRIOR TO ANY INSTALLATION NOT CONFORMING TO THESE RESTRICTIONS.
4. FIRE PROTECTION SYSTEM SUPPORTS TO BE LOCATED TO MAINTAIN A MAXIMUM OF (2) 500 LB MAX POINT LOADS WITH 15'-0" MINIMUM SEPARATION TO ANY STEEL BEAM. NO SUPPORTS TO BE HUNG FROM METAL DECKING.
5. SEE ARCHITECTURAL DRAWINGS FOR EDGE OF SLAB, FACE OF WALL, ETCETERA.
6. SEE ARCHITECTURAL DRAWINGS FOR TOP OF SLAB OR TO TOP OF STEEL ELEVATION.
7. BEAM CENTERLINES TO ALIGN WITH COLUMN CENTERLINES, UNLESS NOTED OTHERWISE.
8. BEAMS TO BE EQUALLY SPACED IN EACH BAY, UNLESS NOTED OTHERWISE.
9. SEISMIC GAPS WHERE NOTED ARE DIMENSIONED CLEAR BETWEEN WALL FINISHES. THIS GAP TO BE MAINTAINED ENTIRELY CLEAR TO ALLOW FOR DIFFERENTIAL BUILDING MOVEMENT. NO PIPES, CONDUITS, ETCETERA SHALL BE LOCATED WITHIN THE GAP. PROVIDE FLEXIBLE COUPLINGS AT ALL UTILITIES CROSSING SEISMIC GAPS.

PLAN LEGEND

SYMBOL	REFERENCE DETAIL	DESCRIPTION
88		INDICATES GRIDLINE AT CENTERLINE OF COLUMN.
□		INDICATES STEEL COLUMN.
W16x26		INDICATES BEAM SIZE. WHERE NO CAMBER IS SPECIFIED FABRICATE BEAM WITH NATURAL CAMBER UP.
	5/S-5.2	INDICATES "T" PLATE BEAM CONNECTION TO COLUMN.
	10/S-5.1	INDICATES NON-FRAME MOMENT RESISTING CONNECTION.
	2/S-5.1	INDICATES SEISMIC FORCE RESISTING SYSTEM COLLECTOR CONNECTION, PROVIDE DOUBLE ROW OF BOLTS AT CONNECTION PER TYPICAL DETAILS.
		INDICATES BRACED FRAME ABOVE.
		INDICATES BRACED FRAME BELOW.
BRACE	9/S-5.1	INDICATES DIAGONAL BRACE CONNECTED TO BOTTOM FLANGE OF BEAM (TRUSS BOTTOM CHORD). HEAD OF ARROW INDICATES THE UPPER CONNECTION. SPACE BRACES EQUALLY UNLESS NOTED OTHERWISE.
		INDICATES LEDGER. SEE PLAN FOR SIZE AND ANCHORAGE.
1	1/S-1.7	INDICATES METAL DECK AND DIRECTION OF DECK SPAN.
	1/S-1.4	INDICATES COLD FORMED STEEL WALL.
		INDICATES COLD FORMED STEEL SHEAR WALL ABOVE.
MU 1,000#	12/S-1.7	INDICATES APPROXIMATE LOCATION, SIZE AND MAXIMUM WEIGHT OF MECHANICAL UNIT. SEE MECHANICAL DRAWINGS FOR ANCHORAGE AND ADDITIONAL INFORMATION.
1 S3.1		INDICATES ELEVATION.
	6/S-5.5 8/S-5.5 11/S-5.5	INDICATES HD AT COLD FORMED SHEAR WALL.
	13/S-5.5	INDICATES HSS HD AT COLD FORMED SHEAR WALL.
SFRS	G/S-0.2	INDICATES SEISMIC FORCE RESISTING SYSTEM.
		INDICATES STEP IN ELEVATION, SEE ARCHITECTURAL DRAWINGS.
A 4'-0"	12/S-5.5	INDICATES TIE STRAP, SEE SCHEDULE FOR STRAP, SCREWS AND TOTAL LENGTH.
A 10'-0"	H/S-0.2	INDICATES SHEAR WALL TYPE AND MINIMUM WALL LENGTH. SYMBOL LOCATION INDICATES SHEATHED FACE OF WALL UNLESS NOTED OTHERWISE.

QUATTROCCHI KWOK ARCHITECTS
Main Office:
636 Fifth Street, Santa Rosa, CA 95404
Pleasanton Office:
600 Main Street, Suite E,
Pleasanton, CA 94566
(707) 576-0829

ZFA STRUCTURAL ENGINEERS
1212 fourth street | suite z **zfa.com**
santa rosa ca 95404 **707.526.0992**
zfa job no. 18254

copyright © 2019

THIS DOCUMENT AND THE IDEAS INCORPORATED HEREIN, AS AN INSTRUMENT OF PROFESSIONAL SERVICE, IS THE PROPERTY OF THE ENGINEER AND IS NOT TO BE USED, IN WHOLE OR IN PART FOR ANY OTHER PROJECT WITHOUT THE PRIOR WRITTEN AUTHORIZATION OF THE ENGINEER.

FREEDOM HIGH SCHOOL

PERFORMING ARTS AND CTE FACILITIES

1050 NEROLY RD
OAKLEY, CA 94561

LIBERTY UNION HIGH SCHOOL DISTRICT

ZFA NO:	18254
ENGR / PM:	NBB / MJR / AIZ
DRAWING SCALE:	As indicated
PTN:	61721-0068

BID SET

AUGUST 13, 2019

SHEET TITLE

BLDG A LOBBY ROOF FRAMING PLAN

SHEET NUMBER

S-A2.4

C:\revit_local\18254_FREEDOM HS PAC_S19C_nkb@zfa.com.rvt
8/5/2019 1:50:56 PM

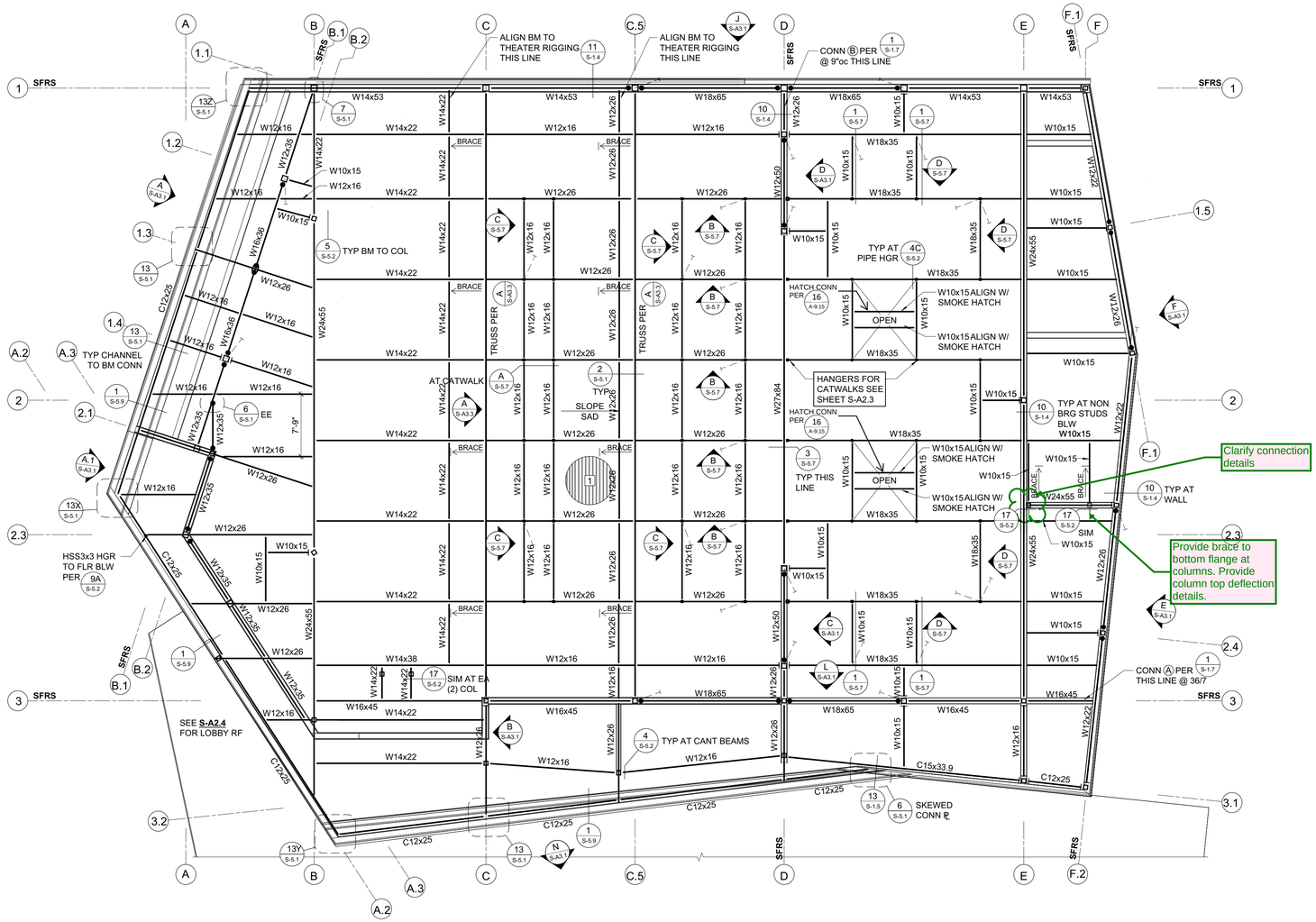

BLDG A ROOF FRAMING PLAN

1/8" = 1'-0"

FRAMING PLAN NOTES:

1. REFER TO SHEETS S-0.1 THRU S-1.7 AND S-5.1 THRU S-5.8 FOR GENERAL NOTES AND TYPICAL DETAILS. THE FOLLOWING DETAIL REFERENCES ARE PROVIDED FOR THE CONTRACTOR'S CONVENIENCE ONLY. ALL GENERAL NOTES AND TYPICAL DETAIL SHEETS NOTED ABOVE ARE APPLICABLE AND SHALL BE FOLLOWED.
2. COORDINATE ALL DIMENSIONS WITH ARCHITECTURAL DRAWINGS PRIOR TO CONSTRUCTION. NOTIFY ARCHITECT/ENGINEER OF ANY DISCREPANCIES.
3. NO VERTICAL OR HORIZONTAL PIPES OR CONDUITS SHALL BE LOCATED THROUGH STEEL FRAMING, COLUMNS, OR BASE PLATES. PROVIDE FURRING WHERE REQUIRED TO CLEAR UTILITY SYSTEMS. NOTIFY ARCHITECT/ENGINEER PRIOR TO ANY INSTALLATION NOT CONFORMING TO THESE RESTRICTIONS.
4. FIRE PROTECTION SYSTEM SUPPORTS TO BE LOCATED TO MAINTAIN A MAXIMUM OF (2) 500 LB MAX POINT LOADS WITH 15'-0" MINIMUM SEPARATION TO ANY STEEL BEAM. NO SUPPORTS TO BE HUNG FROM METAL DECKING.
5. SEE ARCHITECTURAL DRAWINGS FOR EDGE OF SLAB, FACE OF WALL, ETCETERA.
6. SEE ARCHITECTURAL DRAWINGS FOR TOP OF SLAB OR TO TOP OF STEEL ELEVATION.
7. BEAM CENTERLINES TO ALIGN WITH COLUMN CENTERLINES, UNLESS NOTED OTHERWISE.
8. BEAMS TO BE EQUALLY SPACED IN EACH BAY, UNLESS NOTED OTHERWISE.
9. SEISMIC GAPS WHERE NOTED ARE DIMENSIONED CLEAR BETWEEN WALL FINISHES. THIS GAP TO BE MAINTAINED ENTIRELY CLEAR TO ALLOW FOR DIFFERENTIAL BUILDING MOVEMENT. NO PIPES, CONDUITS, ETCETERA SHALL BE LOCATED WITHIN THE GAP. PROVIDE FLEXIBLE COUPLINGS AT ALL UTILITIES CROSSING SEISMIC GAPS.

PLAN LEGEND

SYMBOL	REFERENCE DETAIL	DESCRIPTION
88		INDICATES GRIDLINE AT CENTERLINE OF COLUMN.
□		INDICATES STEEL COLUMN.
W16x26		INDICATES BEAM SIZE. WHERE NO CAMBER IS SPECIFIED FABRICATE BEAM WITH NATURAL CAMBER UP.
□⊢	5/S-5.2	INDICATES "T" PLATE BEAM CONNECTION TO COLUMN.
▷	10/S-5.1	INDICATES NON-FRAME MOMENT RESISTING CONNECTION.
●	2/S-5.1	INDICATES SEISMIC FORCE RESISTING SYSTEM COLLECTOR CONNECTION. PROVIDE DOUBLE ROW OF BOLTS AT CONNECTION PER TYPICAL DETAILS.
		INDICATES BRACED FRAME ABOVE.
		INDICATES BRACED FRAME BELOW.
BRACE	9/S-5.1	INDICATES DIAGONAL BRACE CONNECTED TO BOTTOM FLANGE OF BEAM (TRUSS BOTTOM CHORD). HEAD OF ARROW INDICATES THE UPPER CONNECTION. SPACE BRACES EQUALLY UNLESS NOTED OTHERWISE.
		INDICATES LEDGER. SEE PLAN FOR SIZE AND ANCHORAGE.
1	1/S-1.7	INDICATES METAL DECK AND DIRECTION OF DECK SPAN.
	1/S-1.4	INDICATES COLD FORMED STEEL WALL.
		INDICATES COLD FORMED STEEL SHEAR WALL ABOVE.
MU 1,000#	12/S-1.7	INDICATES APPROXIMATE LOCATION, SIZE AND MAXIMUM WEIGHT OF MECHANICAL UNIT. SEE MECHANICAL DRAWINGS FOR ANCHORAGE AND ADDITIONAL INFORMATION.
1 S3.1		INDICATES ELEVATION.
	6/S-5.5 8/S-5.5 11/S-5.5	INDICATES HD AT COLD FORMED SHEAR WALL.
	13/S-5.5	INDICATES HSS HD AT COLD FORMED SHEAR WALL.
SFRS	G/S-0.2	INDICATES SEISMIC FORCE RESISTING SYSTEM.
		INDICATES STEP IN ELEVATION, SEE ARCHITECTURAL DRAWINGS.
Ⓐ 4'-0"	12/S-5.5	INDICATES TIE STRAP, SEE SCHEDULE FOR STRAP, SCREWS AND TOTAL LENGTH.

QUATTROCCHI KWOK ARCHITECTS
Main Office:
636 Fifth Street, Santa Rosa, CA 95404
Pleasanton Office:
600 Main Street, Suite E,
Pleasanton, CA 94566
(707) 576-0829

ZFA STRUCTURAL ENGINEERS
1212 fourth street | suite z **zfa.com**
santa rosa ca 95404 **707.526.0992**
zfa job no. 18254

copyright © 2019

REGISTERED PROFESSIONAL ENGINEER — NIKOLAS S. WARNKEN — No. S4813 — STRUCTURAL — STATE OF CALIFORNIA

THIS DOCUMENT AND THE IDEAS INCORPORATED HEREIN, AS AN INSTRUMENT OF PROFESSIONAL SERVICE, IS THE PROPERTY OF THE ENGINEER AND IS NOT TO BE USED, IN WHOLE OR IN PART FOR ANY OTHER PROJECT WITHOUT THE PRIOR WRITTEN AUTHORIZATION OF THE ENGINEER.

FREEDOM HIGH SCHOOL

PERFORMING ARTS AND CTE FACILITIES

1050 NEROLY RD
OAKLEY, CA 94561

LIBERTY UNION HIGH SCHOOL DISTRICT

ZFA NO:	18254
ENGR / PM:	NBB / MJR / AIZ
DRAWING SCALE:	As indicated
PTN:	61721-0068

BID SET

AUGUST 13, 2019

SHEET TITLE

BLDG A ROOF FRAMING PLAN

SHEET NUMBER

S-A2.5

C:\revit_local\18254_FREEDOM HS PAC_S18C_nikb@zfa.com.rvt

8/5/2019 1:50:56 PM

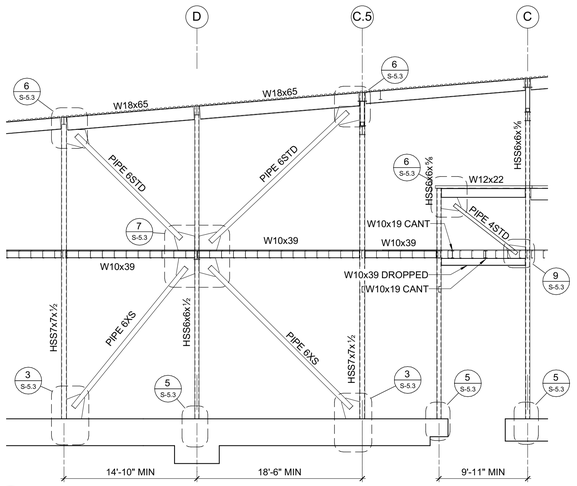

L GRIDLINE 3
1/8" = 1'-0"

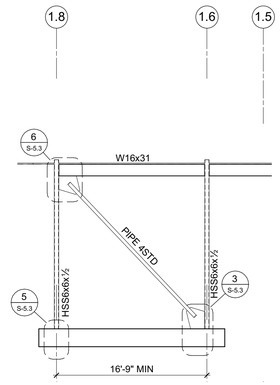

H GRIDLINE H
1/8" = 1'-0"

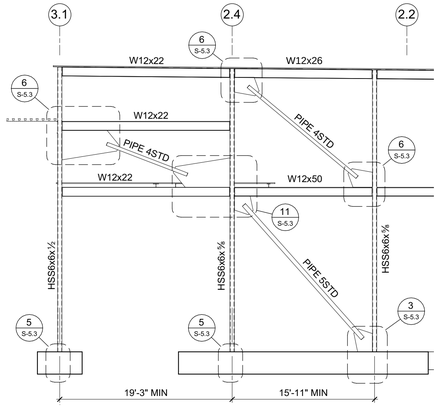

E GRIDLINE F.2
1/8" = 1'-0"

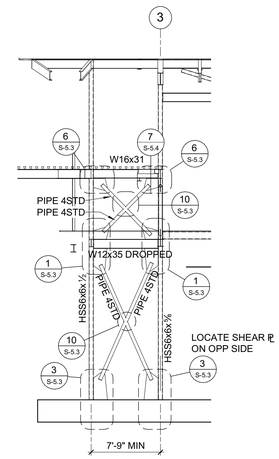

B GRIDLINE C
1/8" = 1'-0"

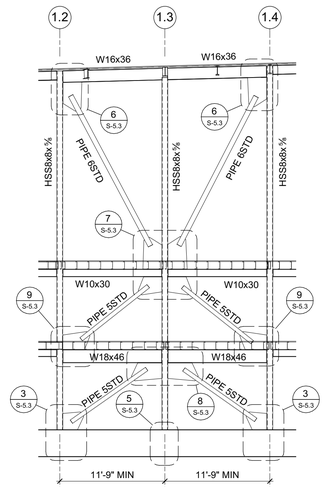

A GRIDLINE B.1
1/8" = 1'-0"

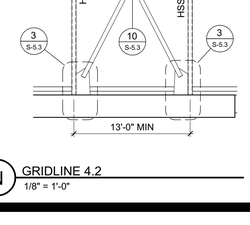

M GRIDLINE 0.1
1/8" = 1'-0"

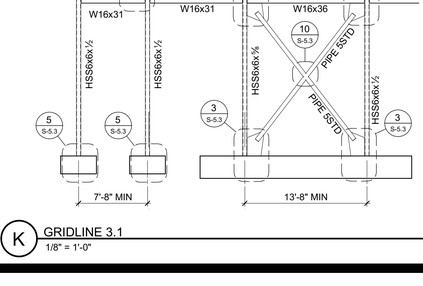

J GRIDLINE 1
1/8" = 1'-0"

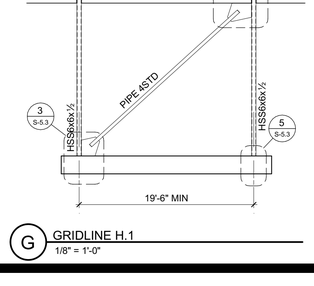

F GRIDLINE F.1
1/8" = 1'-0"

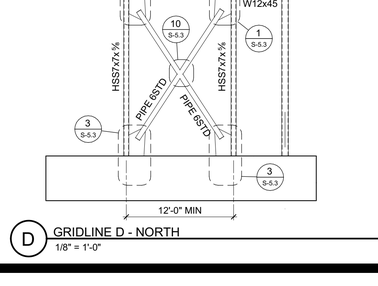

C GRIDLINE D - SOUTH
1/8" = 1'-0"

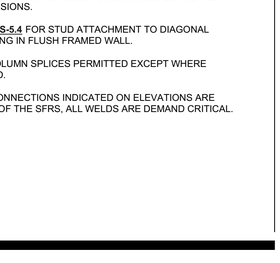

A.1 GRIDLINE B.2
1/8" = 1'-0"

N GRIDLINE 4.2
1/8" = 1'-0"

K GRIDLINE 3.1
1/8" = 1'-0"

G GRIDLINE H.1
1/8" = 1'-0"

D GRIDLINE D - NORTH
1/8" = 1'-0"

FRAME ELEVATION NOTES:

1. ELEVATIONS ARE SCHEMATIC. SEE PLANS FOR ADDITIONAL INFORMATION.
2. SEE PLANS FOR ALL COLUMN AND BEAM SIZES.
3. SEE SHEET **S-5.3** & **S-5.4** FOR BRACED FRAME DETAILS.
4. SEE SHEET **S-1.4** & **S-1.5** & **S-1.6** FOR METAL STUD FRAMING. SAD AND SMD FOR WALL OPENINGS.
5. SAD FOR FRAMING HEIGHTS, BEAM SLOPES AND ALL DIMENSIONS.
6. SEE **1/S-5.4** FOR STUD ATTACHMENT TO DIAGONAL BRACING IN FLUSH FRAMED WALL.
7. NO COLUMN SPLICES PERMITTED EXCEPT WHERE NOTED.
8. ALL CONNECTIONS INDICATED ON ELEVATIONS ARE PART OF THE SFRS, ALL WELDS ARE DEMAND CRITICAL.

QUATTROCCHI KWOK ARCHITECTS
Main Office:
636 Fifth Street, Santa Rosa, CA 95404
Pleasanton Office:
600 Main Street, Suite E,
Pleasanton, CA 94566
(707) 576-0829

ZFA STRUCTURAL ENGINEERS
1212 fourth street | suite z **zfa.com**
santa rosa ca 95404 **707.526.0992**
zfa job no. 18254 **copyright © 2019**

REGISTERED PROFESSIONAL ENGINEER — NILS S. WARNER — No. S4813 — STRUCTURAL — STATE OF CALIFORNIA

THIS DOCUMENT AND THE IDEAS INCORPORATED HEREIN, AS AN INSTRUMENT OF PROFESSIONAL SERVICE, IS THE PROPERTY OF THE ENGINEER AND IS NOT TO BE USED, IN WHOLE OR IN PART FOR ANY OTHER PROJECT WITHOUT THE PRIOR WRITTEN AUTHORIZATION OF THE ENGINEER.

FREEDOM HIGH SCHOOL

PERFORMING ARTS AND CTE FACILITIES

1050 NEROLY RD
OAKLEY, CA 94561

LIBERTY UNION HIGH SCHOOL DISTRICT

ZFA NO:	18254
ENGR / PM:	NBB / MJR / AIZ
DRAWING SCALE:	As indicated
PTN:	61721-0068

BID SET

AUGUST 13, 2019

SHEET TITLE

BLDG A FRAME ELEVATIONS

SHEET NUMBER

S-A3.1

C:\revit_local\18254_FREEDOM HS PAC_S19C_nkb@zfa.com.rvt
8/5/2019 1:51:00 PM

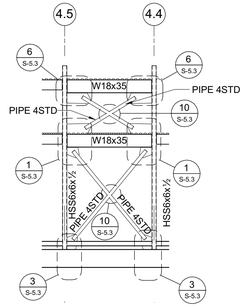

8 GRIDLINE D.1
1/8" = 1'-0"

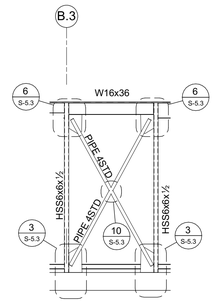

4 GRIDLINE 5.1
1/8" = 1'-0"

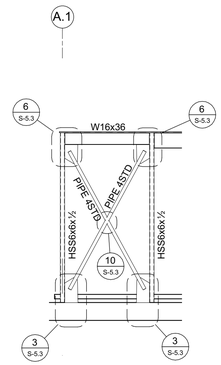

1 GRIDLINE 4.3
1/8" = 1'-0"

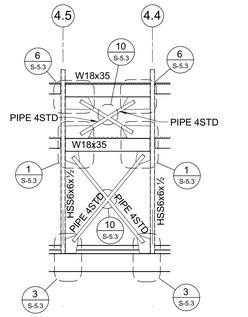

9 GRIDLINE D.2
1/8" = 1'-0"

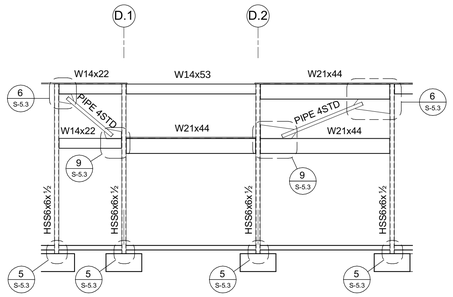

5 GRIDLINE 5
1/8" = 1'-0"

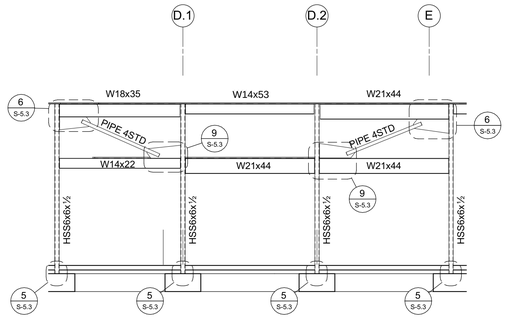

2 GRIDLINE 4.1
1/8" = 1'-0"

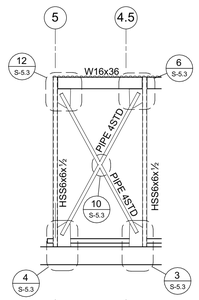

10 GRIDLINE G.2
1/8" = 1'-0"

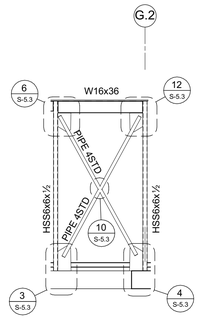

6 GRIDLINE 5
1/8" = 1'-0"

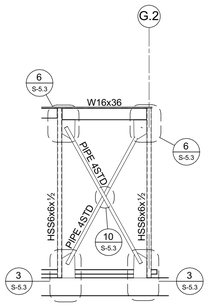

3 GRIDLINE 4.1
1/8" = 1'-0"

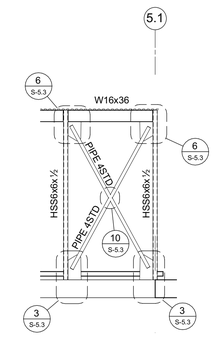

7 GRIDLINE A.1
1/8" = 1'-0"

FRAME ELEVATION NOTES:

1. ELEVATIONS ARE SCHEMATIC. SEE PLANS FOR ADDITIONAL INFORMATION.
2. SEE PLANS FOR ALL COLUMN AND BEAM SIZES.
3. SEE SHEET **S-5.3** & **S-5.4** FOR BRACED FRAME DETAILS.
4. SEE SHEET **S-1.4** & **S-1.5** & **S-1.6** FOR METAL STUD FRAMING. SAD AND SMD FOR WALL OPENINGS.
5. SAD FOR FRAMING HEIGHTS, BEAM SLOPES AND ALL DIMENSIONS.
6. SEE **1/S-5.4** FOR STUD ATTACHMENT TO DIAGONAL BRACING IN FLUSH FRAMED WALL.
7. NO COLUMN SPLICES PERMITTED EXCEPT WHERE NOTED.
8. ALL CONNECTIONS INDICATED ON ELEVATIONS ARE PART OF THE SFRS, ALL WELDS ARE DEMAND CRITICAL.

QUATTROCCHI KWOK ARCHITECTS
Main Office:
636 Fifth Street, Santa Rosa, CA 95404
Pleasanton Office:
600 Main Street, Suite E,
Pleasanton, CA 94566
(707) 576-0829

ZFA STRUCTURAL ENGINEERS
1212 fourth street | suite z **zfa.com**
santa rosa ca 95404 **707.526.0992**
zfa job no. 18254 **copyright © 2019**



THIS DOCUMENT AND THE IDEAS INCORPORATED HEREIN, AS AN INSTRUMENT OF PROFESSIONAL SERVICE, IS THE PROPERTY OF THE ENGINEER AND IS NOT TO BE USED, IN WHOLE OR IN PART FOR ANY OTHER PROJECT WITHOUT THE PRIOR WRITTEN AUTHORIZATION OF THE ENGINEER.

FREEDOM HIGH SCHOOL

PERFORMING ARTS AND CTE FACILITIES

1050 NEROLY RD
OAKLEY, CA 94561

LIBERTY UNION HIGH SCHOOL DISTRICT

ZFA NO:	18254
ENGR / PM:	NBB / MJR / AIZ
DRAWING SCALE:	As indicated
PTN:	61721-0068

BID SET

AUGUST 13, 2019

SHEET TITLE

BLDG A FRAME ELEVATIONS

SHEET NUMBER

S-A3.2

C:\revit_local\18254_FREEDOM HS PAC_S18C_nikk@zfa.com.rvt
8/5/2019 1:51:03 PM

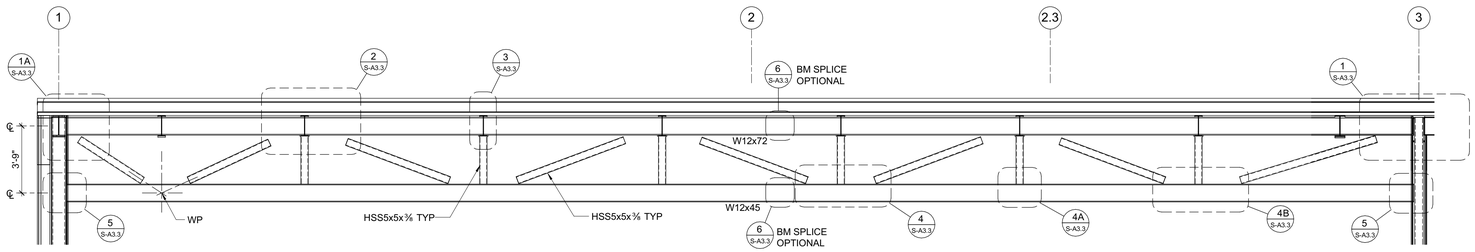

A TRUSS PROFILE
1/4" = 1'-0"

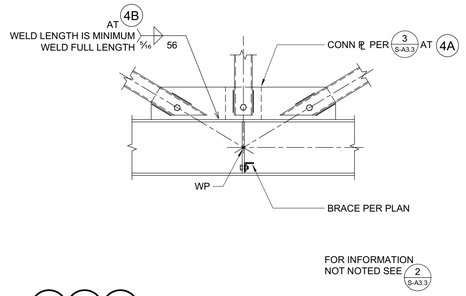

4 4A 4B TRUSS WEB CONNECTION
3/4" = 1'-0"

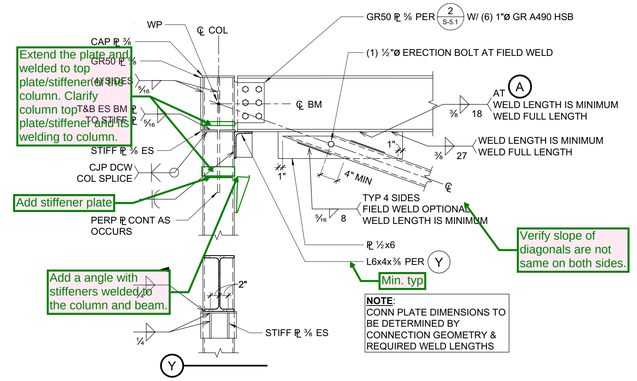

1 TRUSS TOP CHORD CONNECTION
3/4" = 1'-0"

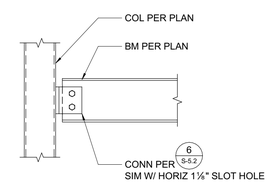

5 TRUSS BOTTOM CHORD CONNECTION
3/4" = 1'-0"

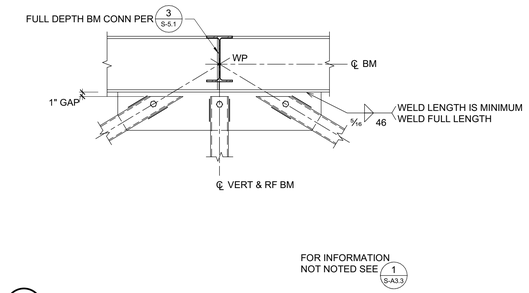

2 TRUSS WEB CONNECTION
3/4" = 1'-0"

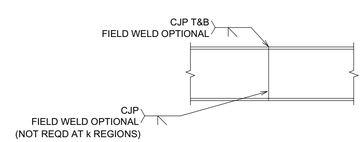

6 BEAM SPLICE
3/4" = 1'-0"

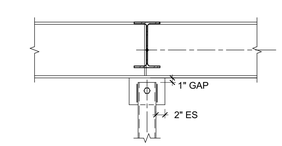

3 TRUSS WEB CONNECTION
3/4" = 1'-0"

QUATTROCCHI KWOK ARCHITECTS
Main Office:
636 Fifth Street, Santa Rosa, CA 95404
Pleasanton Office:
600 Main Street, Suite E,
Pleasanton, CA 94566
(707) 576-0829

ZFA STRUCTURAL ENGINEERS
1212 fourth street | suite z
santa rosa ca 95404
zfa job no. 18254
zfa.com
707.526.0992

copyright © 2019

REGISTERED PROFESSIONAL ENGINEER
CHRIS S. WARNER
No. S4613
STRUCTURAL
STATE OF CALIFORNIA

THIS DOCUMENT AND THE IDEAS INCORPORATED HEREIN, AS AN INSTRUMENT OF PROFESSIONAL SERVICE, IS THE PROPERTY OF THE ENGINEER AND IS NOT TO BE USED, IN WHOLE OR IN PART FOR ANY OTHER PROJECT WITHOUT THE PRIOR WRITTEN AUTHORIZATION OF THE ENGINEER.

FREEDOM HIGH SCHOOL

PERFORMING ARTS AND CTE FACILITIES

1050 NEROLY RD
OAKLEY, CA 94561

LIBERTY UNION HIGH SCHOOL DISTRICT

ZFA NO:	18254
ENGR / PM:	NBB / MJR / AIZ
DRAWING SCALE:	As indicated
PTN:	61721-0068

BID SET

AUGUST 13, 2019

SHEET TITLE

TRUSS ELEVATION AND DETAILS

SHEET NUMBER

S-A3.3

C:\revit_local\18254_FREEDOM HS PAC_S18C_nikb@zfa.com.rvt

8/5/2019 1:51:03 PM

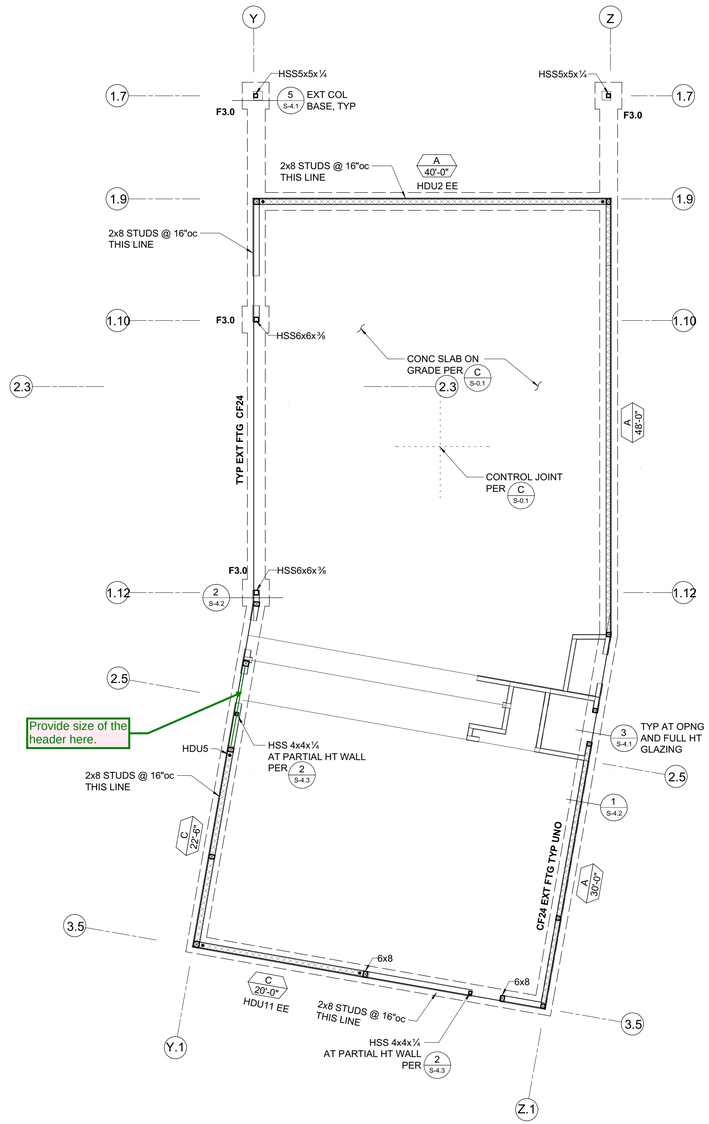

NORTH

BLDG B FOUNDATION PLAN

1/8" = 1'-0"

FOUNDATION PLAN NOTES:

1. REFER TO SHEETS **S-0.1**, **S-0.2**, **S-1.1**, **S-1.2**, **S-1.3**, **S-4.1** AND **S-4.2** FOR GENERAL NOTES AND TYPICAL DETAILS. THE FOLLOWING DETAIL REFERENCES ARE PROVIDED FOR THE CONTRACTOR'S CONVENIENCE ONLY. ALL GENERAL NOTES AND TYPICAL DETAIL SHEETS NOTED ABOVE ARE APPLICABLE AND SHALL BE FOLLOWED.
2. DIMENSIONS ARE TO FACE OF STUD UNLESS NOTED OTHERWISE. COORDINATE ALL DIMENSIONS WITH ARCHITECTURAL DRAWINGS PRIOR TO CONSTRUCTION. NOTIFY ARCHITECT/ENGINEER OF ANY DISCREPANCIES.
3. EXTERIOR WALLS TO HAVE CURBS. COORDINATE CURB WITH ARCHITECTURAL DRAWINGS PRIOR TO CONSTRUCTION. NOTIFY ARCHITECT/ENGINEER OF ANY DISCREPANCIES. PROVIDE LONGER ANCHOR BOLTS AT CURBS PER **C/S-0.1**.
4. ALL EXTERIOR WALLS NOT DESIGNATED AS SHEAR WALLS ON PLANS (INCLUDING WALLS ADJACENT TO SEISMIC GAPS) SHALL BE SHEATHED AS SHEAR WALL TYPE **'A'** PER SHEAR WALL SCHEDULE, UNO.
5. PLUMBING AND ELECTRICAL CONDUIT AND GROUND STRAP SHALL NOT BE LAID WITHIN FOUNDATIONS. NO UTILITY PIPES OR CONDUITS SHALL BE LOCATED THRU COLUMN FOOTINGS. NO PIPES OR CONDUITS THRU SILL PLATES SHALL BE WITHIN 12" OF HOLDOWN BOLTS. NO MECHANICAL, ELECTRICAL, OR PLUMBING OPENINGS SHALL BE LOCATED IN SHEAR WALLS UNLESS SHOWN AND DETAILED ON THE STRUCTURAL DRAWINGS. NO VERTICAL OR HORIZONTAL PIPES OR CONDUITS SHALL BE LOCATED THROUGH STEEL COLUMNS, OR STEEL BASE PLATES. PROVIDE FURRING AND/OR THICKENED CONCRETE WHERE REQUIRED TO CLEAR UTILITY SYSTEMS. NOTIFY STRUCTURAL ENGINEER/ARCHITECT PRIOR TO ANY INSTALLATION NOT CONFORMING TO THESE DETAILS.

   PIPES THROUGH FOOTINGS SHALL BE PER **2/S-1.1** AND **3/S-1.1**.

   PIPES PARALLEL TO FOOTINGS SHALL BE PER **4/S-1.1**.

   PIPES AT SLAB ON GRADE SHALL BE PER **7/S-1.1**.

   PIPES THROUGH WOOD FRAMING SHALL BE PER **2/S-1.2** AND **4/S-1.3** .
6. CONTRACTOR SHALL DETERMINE FOUNDATION STEP LOCATIONS BASED ON GEOTECHNICAL REPORT, CIVIL, ARCHITECTURAL AND LANDSCAPE DRAWINGS. STEP FOOTING PER **5/S-1.1**.
7. SEISMIC GAPS WHERE NOTED ARE DIMENSIONED CLEAR BETWEEN WALL FINISHES. THIS GAP TO BE MAINTAINED ENTIRELY CLEAR TO ALLOW FOR DIFFERENTIAL BUILDING MOVEMENT. NO PIPES, CONDUITS, ETCETERA SHALL BE LOCATED WITHIN THE GAP. PROVIDE FLEXIBLE COUPLINGS AT ALL UTILITIES CROSSING SEISMIC GAPS.

PLAN LEGEND

SYMBOL	REFERENCE DETAIL	DESCRIPTION
———	1/S-1.2	INDICATES STRUCTURAL WALL.
⟋⟋⟋⟋⟋ / A 10'-0"	7/S-1.2 E/S-0.1	INDICATES SHEAR WALL TYPE AND MINIMUM WALL LENGTH. SYMBOL LOCATION INDICATES SHEATHED FACE OF WALL UNLESS NOTED OTHERWISE.
☒	D/S-0.1	INDICATES WOOD POST.
☒•	8/S-1.2	INDICATES POST WITH HOLDOWN. POSTS WITH HOLDOWN ARE FULL HEIGHT FROM SILL TO TOP PLATE.
□	5/S-1.3	INDICATES STEEL COLUMN.
⌐ ‒ ‒ ¬		INDICATES FOUNDATION.
CF24	1/S-4.2	INDICATES CONTINUOUS FOOTING SIZE AND REINFORCING PER SCHEDULE.
F2.0		INDICATES PAD FOOTING SIZE AND REINFORCING PER SCHEDULE.
88		INDICATES GRIDLINE.

WOOD STUD SHEAR WALL SCHEDULE

SW	APA RATED SHEATHING	NAILING (PEN)	ANCHORAGE ⅝"ø BOLT FDN 2x SILL	ANCHORAGE ⅝"ø BOLT FDN 3x SILL	REMARKS
Ⓐ	15/32 " (32/16) EXP 1	10d @ 6"oc	32"oc	48"oc	
Ⓑ	15/32 " (32/16) EXP 1	10d @ 4"oc	24"oc	32"oc	3x MIN AT ALL ADJOINING PANEL EDGES
Ⓒ	15/32 " (32/16) EXP 1	10d @ 3"oc	16"oc	24"oc	

CONTINUOUS FOOTING SCHEDULE

MARK	'b'	'd'	REINF 'a'	NOTES
CF18	18"	24"	(2) #5 T&B	TRANSVERSE #3 @ 18"oc T&B
CF24	24"	24"	(3) #5 T&B	TRANSVERSE #3 @ 18"oc T&B
CF36	36"	24"	(5) #9 T&B	TRANSVERSE #5 @ 18"oc T&B
CF60	60"	30"	(5) #9 T&B	TRANSVERSE #6 @ 18"oc T&B
CF60A	60"	60"	(4) #10 TOP & (9) #10 BOT	TRANSVERSE #5 @ 12"oc T&B
CF84	84"	42"	(7) #10 TOP & (12) #11 BOT	TRANSVERSE #5 @ 12"oc T&B

PAD FOOTING SCHEDULE

MARK	SIZE	REINFORCING
F3.0	3'-0" SQ x 24" DEEP	(5) #5 T&B EW
F4.0	4'-0" SQ x 24" DEEP	(6) #5 T&B EW
F5.0	5'-0" SQ x 24" DEEP	(8) #5 T&B EW

QUATTROCCHI KWOK ARCHITECTS
Main Office:
636 Fifth Street, Santa Rosa, CA 95404
Pleasanton Office:
600 Main Street, Suite E,
Pleasanton, CA 94566
(707) 576-0829

ZFA STRUCTURAL ENGINEERS
1212 fourth street | suite z **zfa.com**
santa rosa ca 95404 **707.526.0992**
zfa job no. 18254

copyright © 2019

LICENSED PROFESSIONAL ENGINEER — LOUIS S. WARNKEN — No. S4613 — STRUCTURAL — STATE OF CALIFORNIA

THIS DOCUMENT AND THE IDEAS INCORPORATED HEREIN, AS AN INSTRUMENT OF PROFESSIONAL SERVICE, IS THE PROPERTY OF THE ENGINEER AND IS NOT TO BE USED, IN WHOLE OR IN PART FOR ANY OTHER PROJECT WITHOUT THE PRIOR WRITTEN AUTHORIZATION OF THE ENGINEER.

FREEDOM HIGH SCHOOL

PERFORMING ARTS AND CTE FACILITIES

1050 NEROLY RD
OAKLEY, CA 94561

LIBERTY UNION HIGH SCHOOL DISTRICT

ZFA NO:	18254
ENGR / PM:	NBB / MJR / AIZ
DRAWING SCALE:	As indicated
PTN:	61721-0068

BID SET

AUGUST 13, 2019

SHEET TITLE

BLDG B FOUNDATION

SHEET NUMBER

S-B2.1

C:\revit_local\18254_FREEDOM HS PAC_S18C_nkk@zfa.com.rvt
8/5/2019 1:51:06 PM

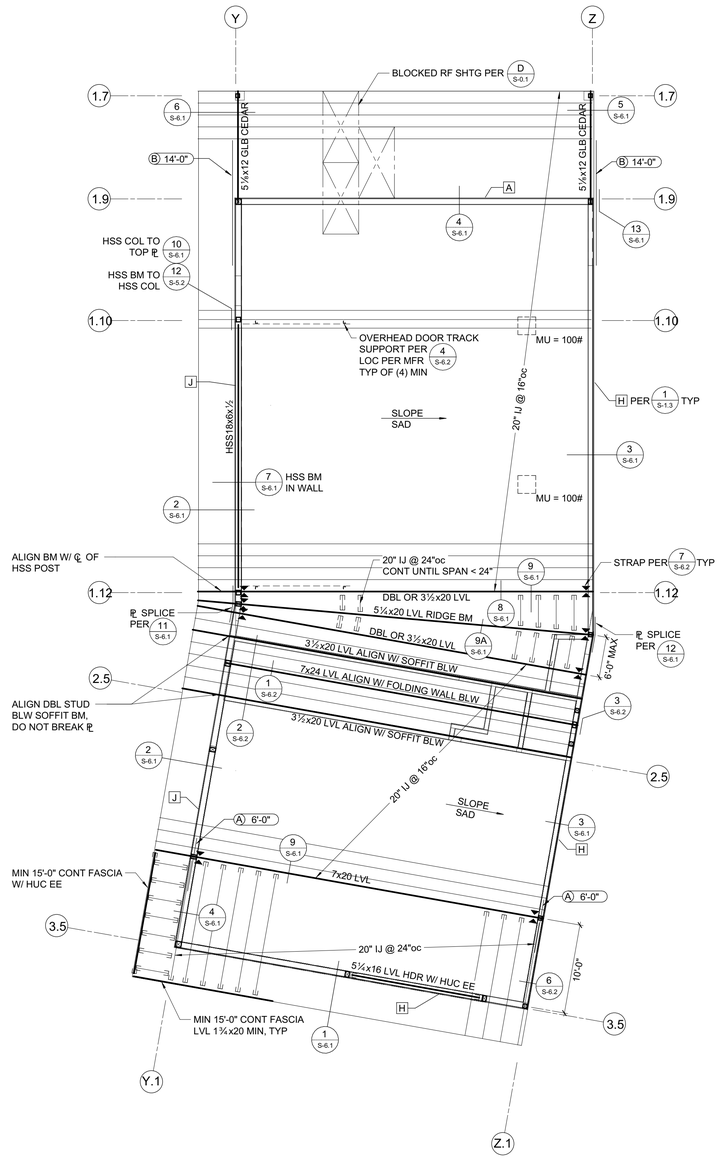

NORTH

BLDG B ROOF FRAMING PLAN

1/8" = 1'-0"

FRAMING PLAN NOTES:

1. REFER TO SHEETS S-0.1, S-0.2, S-1.2, S-1.3, S-6.1 AND S-6.2 FOR GENERAL NOTES AND TYPICAL DETAILS. THE FOLLOWING DETAIL REFERENCES ARE PROVIDED FOR THE CONTRACTOR'S CONVENIENCE ONLY. ALL GENERAL NOTES AND TYPICAL DETAIL SHEETS NOTED ABOVE ARE APPLICABLE AND SHALL BE FOLLOWED.
2. DIMENSIONS ARE TO FACE OF STUD UNLESS NOTED OTHERWISE. COORDINATE ALL DIMENSIONS WITH ARCHITECTURAL DRAWINGS PRIOR TO CONSTRUCTION. NOTIFY ARCHITECT/ENGINEER OF ANY DISCREPANCIES.
3. MECHANICAL, ELECTRICAL AND PLUMBING PENETRATIONS THROUGH WALLS, ROOFS OR FLOORS SHALL BE PER REFERENCES BELOW UNLESS SHOWN AND DETAILED OTHERWISE ON THE STRUCTURAL PLANS. NOTIFY ARCHITECT/ENGINEER PRIOR TO ANY INSTALLATION NOT CONFORMING TO THESE DETAILS.

   PENETRATIONS THROUGH SHEAR WALLS SHALL BE PER 6/S-1.2

   PENETRATIONS THROUGH FLOORS/ROOFS SHALL BE PER 5/S-1.2
4. ALL EXTERIOR WALLS NOT DESIGNATED AS SHEAR WALLS ON PLANS (INCLUDING WALLS ADJACENT TO SEISMIC GAPS) SHALL BE SHEATHED AS SHEAR WALL TYPE **'A'** PER SHEAR WALL SCHEDULE, UNLESS NOTED OTHERWISE.
5. ELEVATIONS ON PLANS AND DETAILS **"✧"** ARE TO HEIGHTS ABOVE FINISHED GROUND FLOOR ELEVATION REFERENCE 0'-0". COORDINATE TOP OF FRAMING AND LEDGER HEIGHTS AS REQUIRED TO PROVIDE ROOF SLOPES AS SHOWN ON ARCHITECTURAL AND STRUCTURAL DRAWINGS PRIOR TO CONSTRUCTION. NOTIFY ARCHITECT/ENGINEER OF ANY DISCREPANCIES.
6. SEISMIC GAPS WHERE NOTED ARE DIMENSIONED CLEAR BETWEEN WALL FINISHES. THIS GAP TO BE MAINTAINED ENTIRELY CLEAR TO ALLOW FOR DIFFERENTIAL BUILDING MOVEMENT. NO PIPES, CONDUITS, ETCETERA SHALL BE LOCATED WITHIN THE GAP. PROVIDE FLEXIBLE COUPLINGS AT ALL UTILITIES CROSSING SEISMIC GAPS.

PLAN LEGEND

SYMBOL	REFERENCE DETAIL	DESCRIPTION
———	1/S-1.2	INDICATES STRUCTURAL WALL.
⊠⊠⊠ A 10'-0"	7/S-1.2 E/S-0.1	INDICATES SHEAR WALL TYPE AND MINIMUM WALL LENGTH. SYMBOL LOCATION INDICATES SHEATHED FACE OF WALL UNLESS NOTED OTHERWISE.
⊠	D/S-0.1	INDICATES WOOD POST.
⊠•	8/S-1.2	INDICATES POST WITH HOLDOWN. POSTS WITH HOLDOWN ARE FULL HEIGHT FROM SILL TO TOP PLATE.
□	5/S-1.3	INDICATES STEEL COLUMN.
3½x12 GLB C=1"	D/S-0.1	INDICATES GLULAM BEAM SIZE AND CAMBER. WHERE NO CAMBER IS SPECIFIED SEE WOOD FRAMING NOTES FOR TYPICAL GLULAM BEAM CAMBER.
. . . . .	11/S-1.2	INDICATES PANEL EDGE NAILING ALONG FULL LENGTH OF MEMBER.
⋲	D/S-0.1	INDICATES HANGER.
88		INDICATES GRIDLINE.
MU 1,000#	E/M4.4	INDICATES APPROXIMATE LOCATION, SIZE AND MAXIMUM WEIGHT OF MECHANICAL UNIT. SEE MECHANICAL DRAWINGS FOR ANCHORAGE AND ADDITIONAL INFORMATION.
A	1/S-1.3	INDICATES TOP PLATE SPLICE. SPLICE TYPE SHALL OCCUR ALONG THE ENTIRE LENGTH OF THE WALL, UNO. PROVIDE SPLICE TYPE **'A'** IF NOT NOTED ON PLANS.
A 4'-0"	2/S-1.3	INDICATES TIE STRAP. SEE SCHEDULE FOR STRAP, NAILING AND TOTAL LENGTH.
▼		INDICATES VERTICAL STRAP.

TIE STRAP SCHEDULE

MARK	STRAP	MIN. SCREWS ES OF ✦	MAX. SCREW SPACING (SEE NOTES #1 & #2)			MIN. END LENGTH (EL)
			CASE 1	CASE 2		
				EL	RL	
Ⓐ	CS14	(13) 10d	10d @ 4"oc STGR	FILL ALL HOLES	10d @ 4"oc STGR	16"
Ⓑ	CMSTC16	(25) 10d	10d @ 3"oc STGR	FILL ALL HOLES	10d @ 3"oc STGR	24"

1. CASE 1 APPLIES UNLESS END LENGTH (EL) IS NOTED ON PLANS. WHERE END LENGTH (EL) IS NOTED, SEE CASE 2.

TOP PLATE SPLICE SCHEDULE

MARK	LAP SPLICE (CASE 1)	STRAP SPLICE (CASE 2)	STRAP SPLICE (CASE 3)
A	(12) 16d PER 4'-0" MIN LAP	MSTC28	
B	(22) 16d PER 4'-0" MIN LAP	MSTC40	
C	(26) 16d PER 6'-0" MIN LAP	MSTC52	
D	(32) 16d PER 6'-0" MIN LAP	MSTC66	
E	(36) 16d PER 8'-0" MIN LAP	MSTC28 EA SIDE	
F	(44) 16d PER 8'-0" MIN LAP	MSTC40 EA SIDE	
G	(50) 16d PER 10'-0" MIN LAP	MSTC52 EA SIDE	
H		MSTC66 EA SIDE	
J			℄ ¼"x4" W/ (5) 1" MB EE

QUATTROCCHI KWOK ARCHITECTS
Main Office:
636 Fifth Street, Santa Rosa, CA 95404
Pleasanton Office:
600 Main Street, Suite E,
Pleasanton, CA 94566
(707) 576-0829

ZFA STRUCTURAL ENGINEERS
1212 fourth street | suite z **zfa.com**
santa rosa ca 95404 **707.526.0992**
zfa job no. 18254 **copyright © 2019**

REGISTERED PROFESSIONAL ENGINEER — NIKLAS S. WARNKEN — No. S4813 — STRUCTURAL — STATE OF CALIFORNIA

THIS DOCUMENT AND THE IDEAS INCORPORATED HEREIN, AS AN INSTRUMENT OF PROFESSIONAL SERVICE, IS THE PROPERTY OF THE ENGINEER AND IS NOT TO BE USED, IN WHOLE OR IN PART FOR ANY OTHER PROJECT WITHOUT THE PRIOR WRITTEN AUTHORIZATION OF THE ENGINEER.

FREEDOM HIGH SCHOOL

PERFORMING ARTS AND CTE FACILITIES

1050 NEROLY RD
OAKLEY, CA 94561

LIBERTY UNION HIGH SCHOOL DISTRICT

ZFA NO:	18254
ENGR / PM:	NBB / MJR / AIZ
DRAWING SCALE:	As indicated
PTN:	61721-0068

BID SET

AUGUST 13, 2019

SHEET TITLE

BLDG B ROOF FRAMING PLAN

SHEET NUMBER

S-B2.2

C:\revit_local\18254_FREEDOM HS PAC_S18C_nikb@zfa.com.rvt
8/5/2019 1:51:08 PM

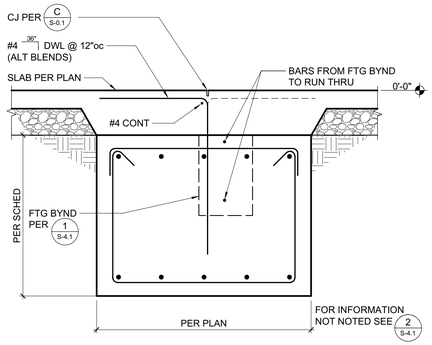

12 GRADE BEAM
3/4" = 1'-0"

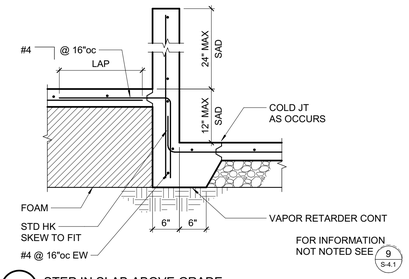

13 STEP IN SLAB ABOVE GRADE
3/4" = 1'-0"

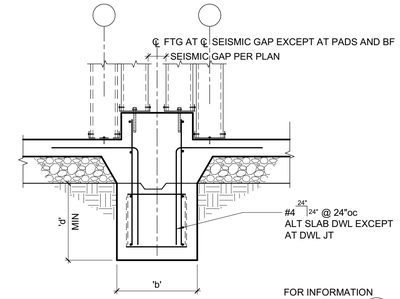

8 SEISMIC SEPARATION
3/4" = 1'-0"

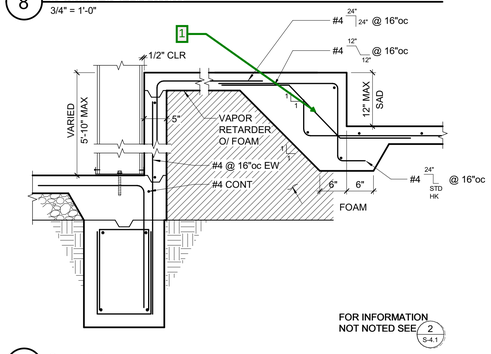

9 STEM WALL
3/4" = 1'-0"

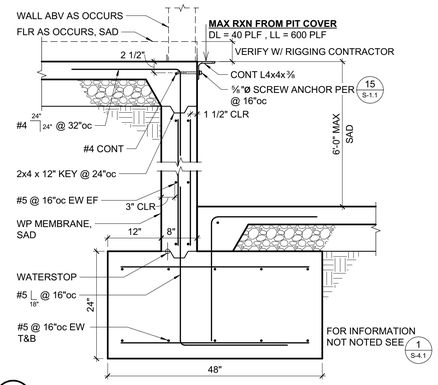

10 STAGE RETAINING WALL
3/4" = 1'-0"

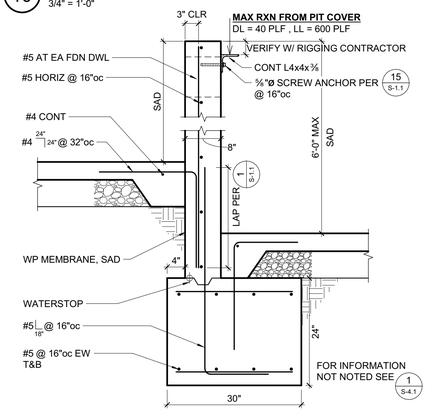

11 AUDITORIUM RETAINING WALL
3/4" = 1'-0"

PIPE & PIER SCHEDULE					
TYPE	"H" MAX POST HT ABV GR	"OD" / "S" MIN SIZE	MAX SPCG BTWN POSTS	"D" MIN PIER DEPTH	"d" PIER DIA
3'-6" ORNAMENTAL FENCE	3'-6"	2 ½"SQ x 12GA	8'-0"	3'-0"	18"
3'-6" ORNAMENTAL MAINTENANCE GATE	3'-6"	3"SQ x 12GA	4'-0"	3'-0"	18"
8'-0" ORNAMENTAL FENCE	8'-0"	3"SQ x 12GA	8'-0"	3'-0"	18"
8'-0" ORNAMENTAL SINGLE GATE (W/ PERFORATED METAL 4'-0" MAX ES)	8'-0"	3"SQ x 12GA	4'-0"	3'-0"	18"
8'-0" ORNAMENTAL DBL MAINTENANCE GATE	8'-0"	3"SQ x 12GA	12'-0"	3'-0"	18"
8'-0" ORNAMENTAL DBL HEAVY DUTY GATE	8'-0"	6"SQ x ⅜+"	20'-0"	3'-0"	18"
8'-0" CHAIN LINK FENCE	8'-0"	2 ⅛"	12'-0"	3'-0"	18"
8'-0" CHAIN LINK DOUBLE MAINTENANCE GATE	8'-0"	2 ⅛"	20'-0"	3'-0"	18"
PIPE GATE FOOTING	3'-6"	SLD	N/A	3'-0"	18"

NOTES:
1. ORNAMENTAL FENCE AND GATE PPIER DESIGN BASED ON AEGIS II MAJESTIC. IF AN ALTERNATIVE IS USED, CONTACT ZFA IMMEDIATELY. POST SIZES ARE PER THE MANUFACTURER.
2. IF GROUND WATER IS ENCOUNTERED AT PIERS CONSULT GEOTECHNICAL ENGINEER FOR PIER CASTING REQUIREMENTS.
3. WINDSCREENS, PRIVACY NETTINGS, PERFORATED METAL AND SLATS ARE NOT ALLOWED UNLESS SPECIFICALLY NOTED IN THE STRUCTURAL DRAWINGS.
4. MAX SPACING BETWEEN POSTS AT GATE REFERS TO THE TWO POSTS ON EITHER SIDE OF THE GATE.
5. F_y = 30,000PSI MIN UNO OR AS SPECIFIED BY MANUFACTURER.

14 DRILLED PIERS
3/4" = 1'-0"

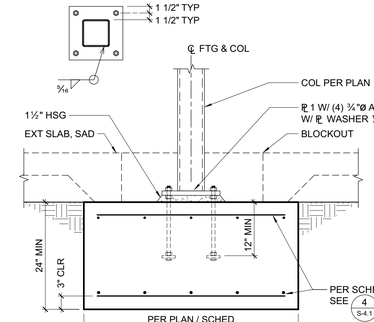

5 HSS COLUMN PAD FOOTING
3/4" = 1'-0"

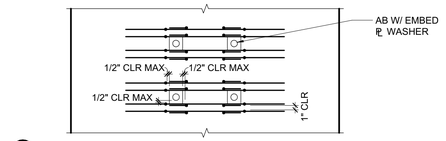

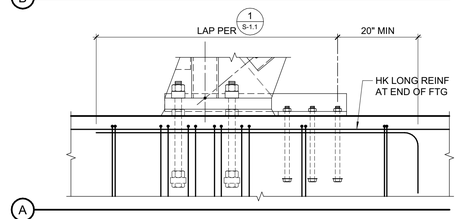

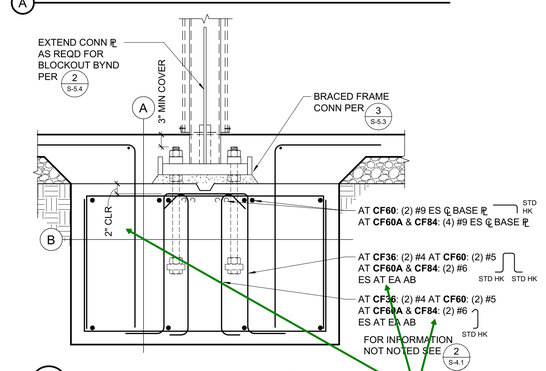

6 BRACED FRAME FOOTING - INTERIOR
3/4" = 1'-0"

Provide a plan view detail to clarify locations of the 8 anchor reinforcement at each AB.
Provide 2" min. cover at end of hook.
Verify footing depth for Ldh on both side of the failure cone, for example 24" appears not enough.

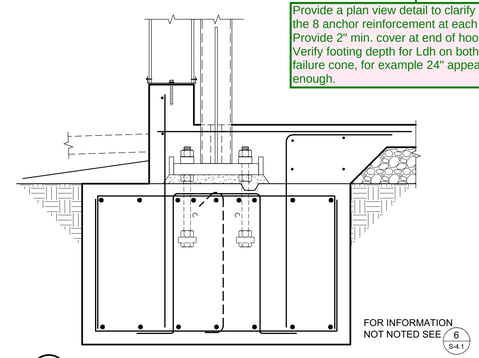

7 BRACED FRAME FOOTING - EXTERIOR WALL
3/4" = 1'-0"

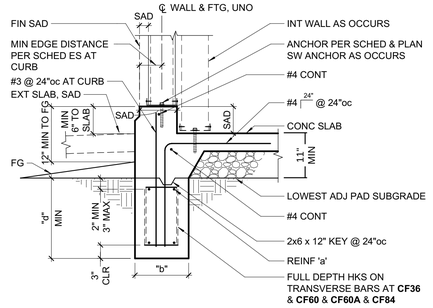

CONTINUOUS FOOTING SCHEDULE				
MARK	'b'	'd'	REINF 'a'	NOTES
CF18	18"	24"	(2) #5 T&B	TRANSVERSE #3 @ 18"oc T&B
CF24	24"	24"	(3) #5 T&B	TRANSVERSE #3 @ 18"oc T&B
CF36	36"	24"	(5) #9 T&B	TRANSVERSE #5 @ 18"oc T&B
CF60	60"	30"	(5) #9 T&B	TRANSVERSE #6 @ 18"oc T&B
CF60A	60"	60"	(4) #10 TOP & (9) #10 BOT	TRANSVERSE #5 @ 12"oc T&B
CF84	84"	42"	(7) #10 TOP & (12) #11 BOT	TRANSVERSE #5 @ 12"oc T&B

1 PERIMETER FOOTING
3/4" = 1'-0"

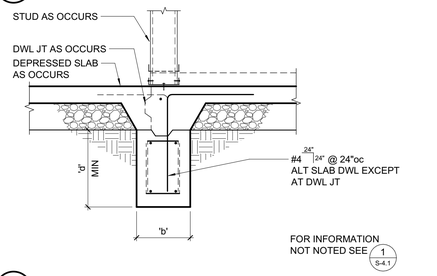

2 INTERIOR FOOTING
3/4" = 1'-0"

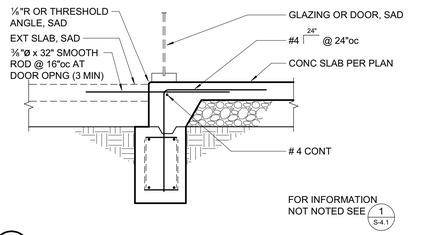

3 FOOTING AT GLAZING OR DOOR
3/4" = 1'-0"

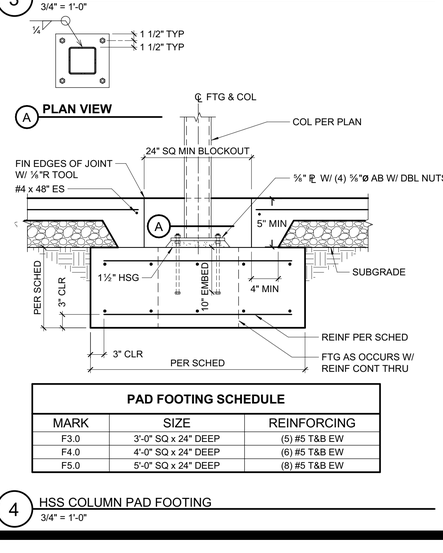

PAD FOOTING SCHEDULE		
MARK	SIZE	REINFORCING
F3.0	3'-0" SQ x 24" DEEP	(5) #5 T&B EW
F4.0	4'-0" SQ x 24" DEEP	(6) #5 T&B EW
F5.0	5'-0" SQ x 24" DEEP	(8) #5 T&B EW

4 HSS COLUMN PAD FOOTING
3/4" = 1'-0"

QUATTROCCHI KWOK ARCHITECTS
Main Office:
636 Fifth Street, Santa Rosa, CA 95404
Pleasanton Office:
600 Main Street, Suite E,
Pleasanton, CA 94566
(707) 576-0829

ZFA STRUCTURAL ENGINEERS
1212 fourth street | suite z **zfa.com**
santa rosa ca 95404 **707.526.0992**
zfa job no. 18254

copyright © 2019



THIS DOCUMENT AND THE IDEAS INCORPORATED HEREIN, AS AN INSTRUMENT OF PROFESSIONAL SERVICE, IS THE PROPERTY OF THE ENGINEER AND IS NOT TO BE USED, IN WHOLE OR IN PART FOR ANY OTHER PROJECT WITHOUT THE PRIOR WRITTEN AUTHORIZATION OF THE ENGINEER.

FREEDOM HIGH SCHOOL

PERFORMING ARTS AND CTE FACILITIES

1050 NEROLY RD
OAKLEY, CA 94561

LIBERTY UNION HIGH SCHOOL DISTRICT

ZFA NO:	18254
ENGR / PM:	NBB / MJR / AIZ
DRAWING SCALE:	3/4" = 1'-0"
PTN:	61721-0068

BID SET

AUGUST 13, 2019

SHEET TITLE

FOUNDATION DETAILS

SHEET NUMBER

S-4.1

C:\revit_local\18254_FREEDOM HS PAC_S18C_nikb@zfa.com.rvt
8/5/2019 1:50:12 PM

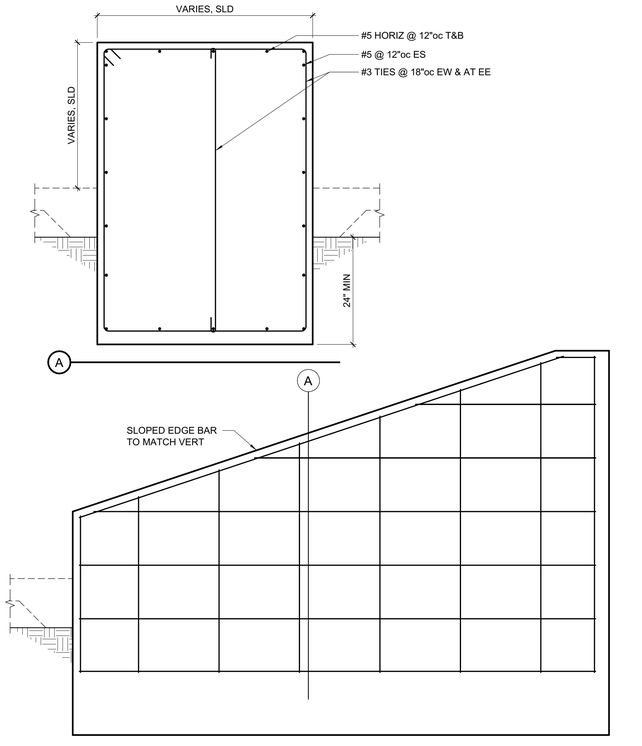

ELEVATION

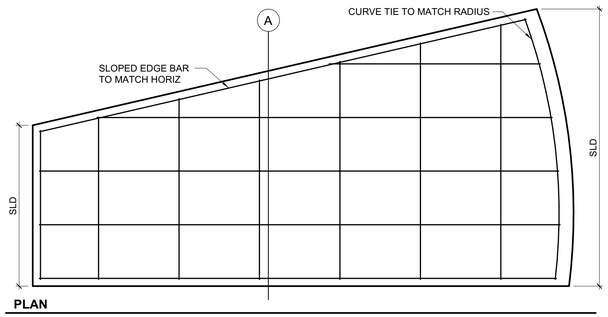

PLAN

9 EXTERIOR CONCRETE WALL AT PAVILION
3/4" = 1'-0"

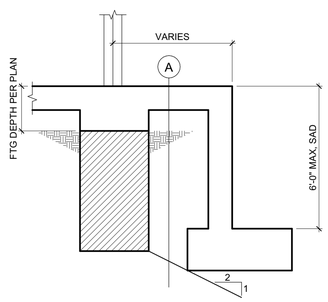

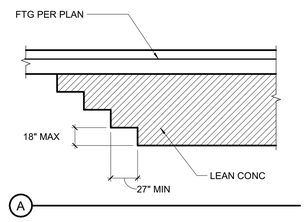

10 SCHEMATIC DEEPENED FOOTINGS WITH LEAN CONCRETE
3/4" = 1'-0"

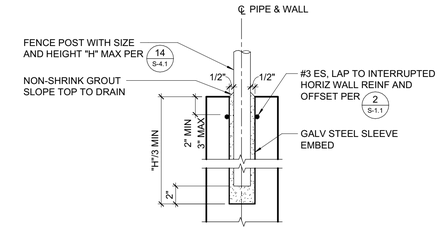

6 FENCE POST AT RETAINING WALL
1 1/2" = 1'-0"

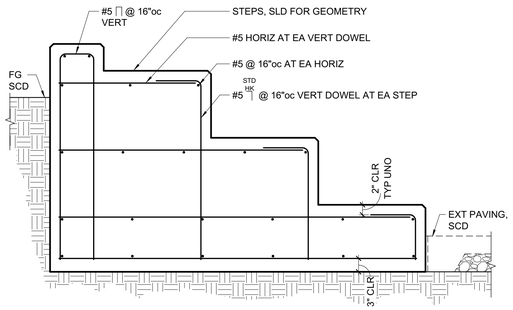

7 EXTERIOR CONCRETE - TIERED SEAT WALL
3/4" = 1'-0"

Provide retaining wall analysis. footing seems too small.

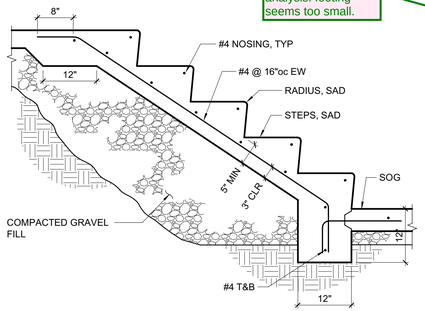

8 CONCRETE STAIRS TO ORCHESTRA PIT
3/4" = 1'-0"

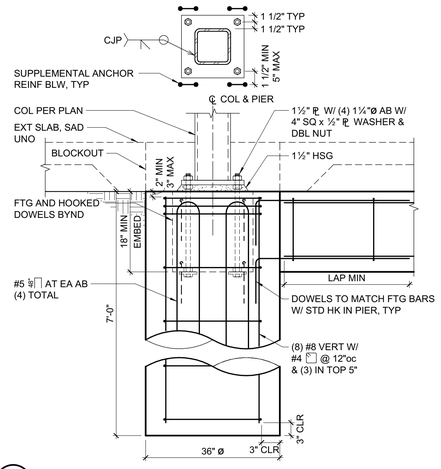

3 HSS COLUMN AND PIER AT LOBBY CANOPY
3/4" = 1'-0"

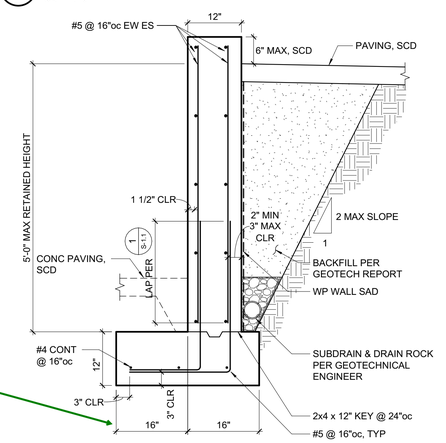

NOTES:
1. PROVIDE FORMED DOWELED CONSTRUCTION JOINTS AT 100'-0"oc MAX.
2. PROVIDE VERTICAL CONTROL JOINTS AT 2H ON CENTER MAX (10'-0" MIN). COORDINATE LOCATIONS W/ ARCH AND ENGINEER.
3. PROVIDE ENGINEERED FILL OR LIME TREATMENT PER GEOTECH REPORT.

4 TYPICAL SEAT WALL
3/4" = 1'-0"

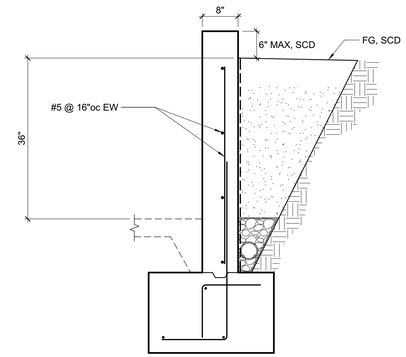

FOR INFORMATION NOT NOTED SEE 4 S-4.2

5 TYPICAL RETAINING WALL
3/4" = 1'-0"

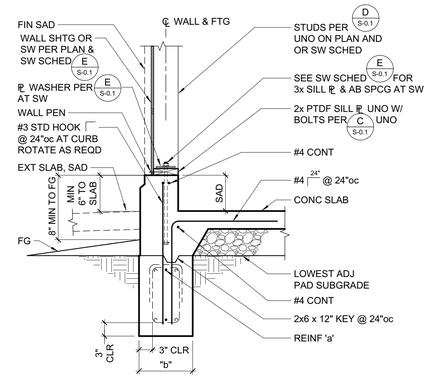

CONTINUOUS FOOTING SCHEDULE				
MARK	'b'	'd'	REINF 'a'	NOTES
CF18	18"	24"	(2) #5 T&B	TRANSVERSE #3 @ 18"oc T&B
CF24	24"	24"	(3) #5 T&B	TRANSVERSE #3 @ 18"oc T&B
CF36	36"	24"	(5) #9 T&B	TRANSVERSE #5 @ 18"oc T&B
CF60	60"	30"	(5) #9 T&B	TRANSVERSE #6 @ 18"oc T&B
CF60A	60"	60"	(4) #10 TOP & (9) #10 BOT	TRANSVERSE #5 @ 12"oc T&B
CF84	84"	42"	(7) #10 TOP & (12) #11 BOT	TRANSVERSE #5 @ 12"oc T&B

1 TYPICAL EXTERIOR FOOTING
3/4" = 1'-0"

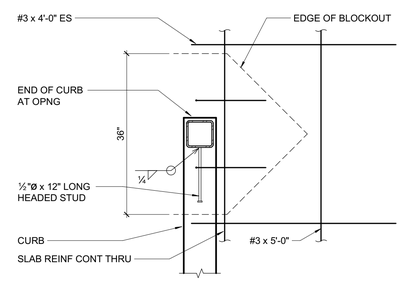

CORNER CONDITION SIMILAR

A PLAN VIEW

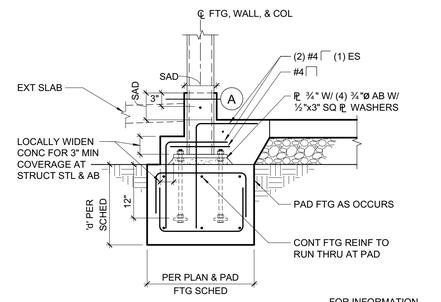

FOR INFORMATION NOT NOTED SEE 4 S-4.1

2 HSS COLUMN AT CURB
3/4" = 1'-0"

QUATTROCCHI KWOK ARCHITECTS
Main Office:
636 Fifth Street, Santa Rosa, CA 95404
Pleasanton Office:
600 Main Street, Suite E,
Pleasanton, CA 94566
(707) 576-0829

ZFA STRUCTURAL ENGINEERS
1212 fourth street | suite z **zfa.com**
santa rosa ca 95404 **707.526.0992**
zfa job no. 18254

copyright © 2019



THIS DOCUMENT AND THE IDEAS INCORPORATED HEREIN, AS AN INSTRUMENT OF PROFESSIONAL SERVICE, IS THE PROPERTY OF THE ENGINEER AND IS NOT TO BE USED, IN WHOLE OR IN PART FOR ANY OTHER PROJECT WITHOUT THE PRIOR WRITTEN AUTHORIZATION OF THE ENGINEER.

FREEDOM HIGH SCHOOL

PERFORMING ARTS AND CTE FACILITIES

1050 NEROLY RD
OAKLEY, CA 94561

LIBERTY UNION HIGH SCHOOL DISTRICT

ZFA NO:	18254
ENGR / PM:	NBB / MJR / AIZ
DRAWING SCALE:	As indicated
PTN:	61721-0068

BID SET

AUGUST 13, 2019

SHEET TITLE

FOUNDATION DETAILS

SHEET NUMBER

S-4.2

C:\revit_local\18254_FREEDOM HS PAC_S18C_nikb@zfa.com.rvt
8/5/2019 1:50:14 PM

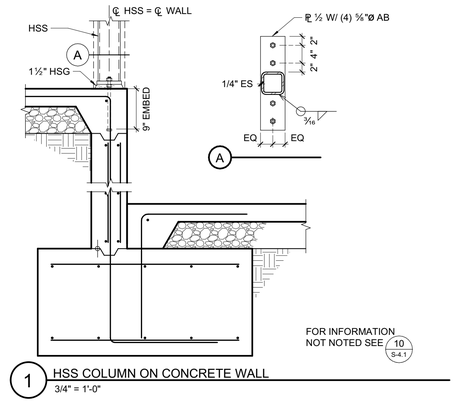

1 HSS COLUMN ON CONCRETE WALL
3/4" = 1'-0"

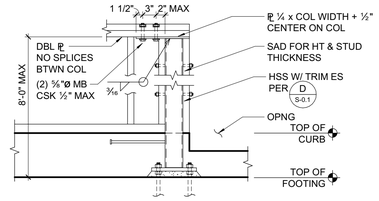

ELEVATION VIEW

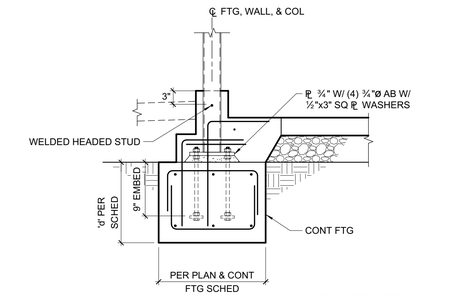

2 HSS COLUMN AT PARTIAL HEIGHT WALL
3/4" = 1'-0"

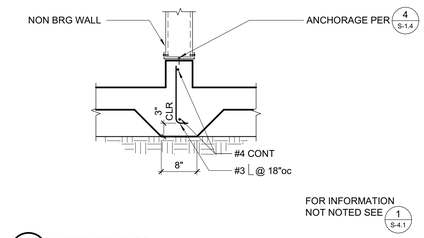

3 INTERIOR CURB
3/4" = 1'-0"

QUATTROCCHI KWOK ARCHITECTS
Main Office:
636 Fifth Street, Santa Rosa, CA 95404
Pleasanton Office:
600 Main Street, Suite E,
Pleasanton, CA 94566
(707) 576-0829

ZFA STRUCTURAL ENGINEERS
1212 fourth street | suite z **zfa.com**
santa rosa ca 95404 **707.526.0992**
zfa job no. 18254
copyright © 2019



THIS DOCUMENT AND THE IDEAS INCORPORATED HEREIN, AS AN INSTRUMENT OF PROFESSIONAL SERVICE, IS THE PROPERTY OF THE ENGINEER AND IS NOT TO BE USED, IN WHOLE OR IN PART FOR ANY OTHER PROJECT WITHOUT THE PRIOR WRITTEN AUTHORIZATION OF THE ENGINEER.

FREEDOM HIGH SCHOOL

PERFORMING ARTS AND CTE FACILITIES

1050 NEROLY RD
OAKLEY, CA 94561

LIBERTY UNION HIGH SCHOOL DISTRICT

ZFA NO:	18254
ENGR / PM:	NBB / MJR / AIZ
DRAWING SCALE:	3/4" = 1'-0"
PTN:	61721-0068

BID SET

AUGUST 13, 2019

SHEET TITLE

FOUNDATION DETAILS

SHEET NUMBER

S-4.3

C:\revit_local\18254_FREEDOM HS PAC_S18C_nikk@zfa.com.rvt
8/5/2019 1:50:15 PM

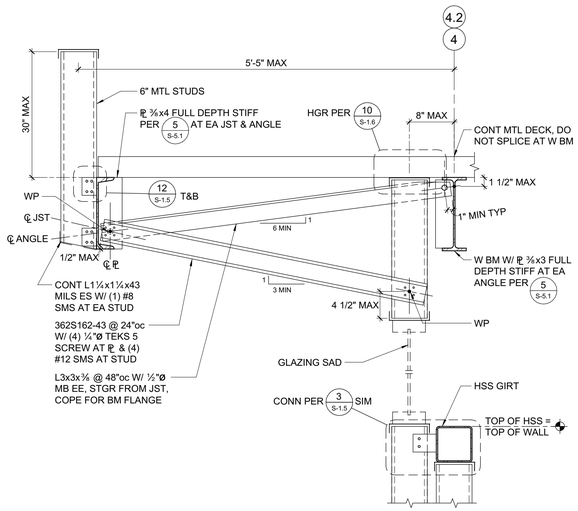

14 OVERHANG GRID LINE 4 & 4.2
1" = 1'-0"

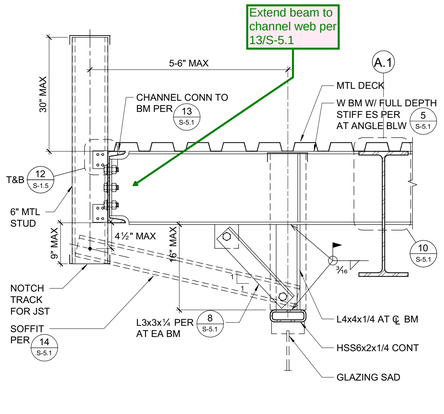

15 OVERHANG NEAR GRIDLINE A1
NOT TO SCALE

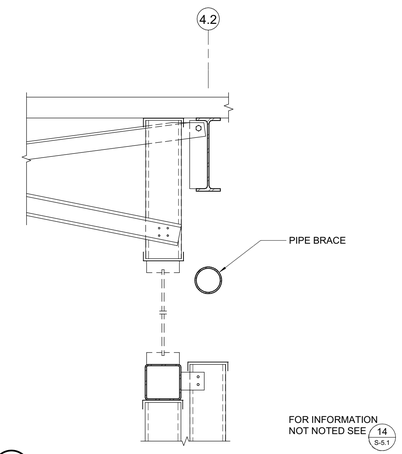

16 OVERHANG GRID LINE 4 & 4.2
1" = 1'-0"

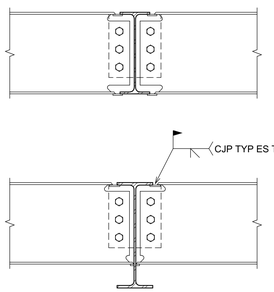

NOTES:
1. CANTILEVER BEAM SIZE TO MATCH ADJACENT BACK SPAN BEAM SIZE, UNO.
2. SHORE CANTILEVER AS REQUIRED.

FOR INFORMATION NOT NOTED SEE 2 S-5.1

10 BEAM TO BEAM MOMENT CONNECTION
1" = 1'-0"

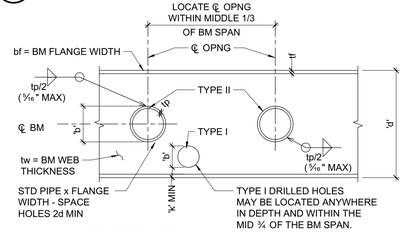

LIMITS OF OPENINGS:
TYPE I: b = 1/5d MAX
SPACED A MINIMUM OF 2d APART
TYPE II:b = 2/3d MAX
SPACED A MINIMUM 2d APART

NOTES:
1. PROVIDE HOLES IN BEAMS ONLY WHERE SPECIFICALLY SHOWN ON STRUCTURAL DRAWINGS.
2. DO NOT TORCH CUT OPENINGS ON SITE. TORCH CUT OPENINGS MADE IN SHOP TO BE GROUND SMOOTH. NO OVERCUTS OF ANY TYPE ALLOWED WITHOUT REPAIR.

11 OPENING IN STEEL BEAM
3/4" = 1'-0"

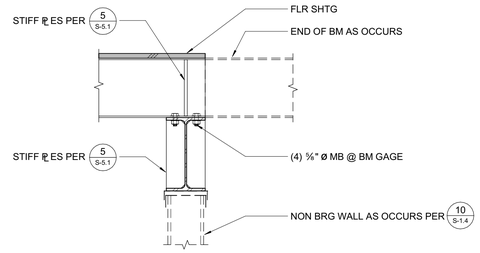

12 BEAM ON TOP OF BEAM CONNECTION
1" = 1'-0"

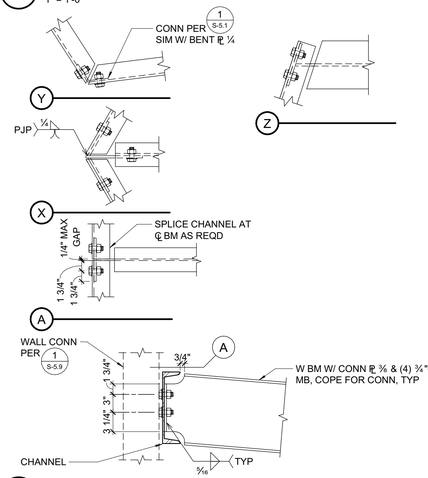

13 CHANNEL BEAM FASCIA CONNECTION
1" = 1'-0"

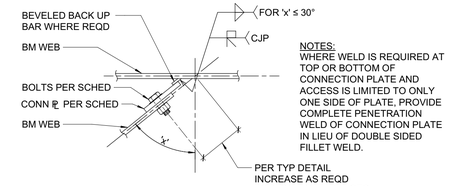

NOTES:
WHERE WELD IS REQUIRED AT TOP OR BOTTOM OF CONNECTION PLATE AND ACCESS IS LIMITED TO ONLY ONE SIDE OF PLATE, PROVIDE COMPLETE PENETRATION WELD OF CONNECTION PLATE IN LIEU OF DOUBLE SIDED FILLET WELD.

6 SKEWED BEAM CONNECTION - AT WEB
1 1/2" = 1'-0"

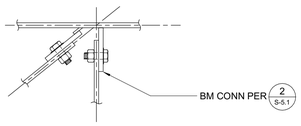

FOR INFORMATION NOT NOTED SEE 6 S-5.1

7 SKEWED BEAM CONNECTION - AT WEB
1 1/2" = 1'-0"

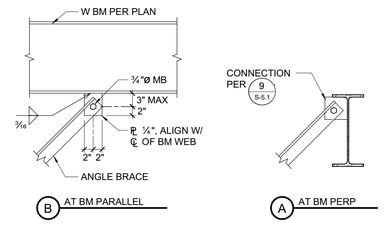

8 TOP OF BRACE
3/4" = 1'-0"

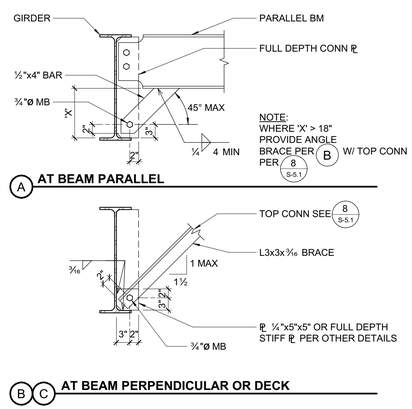

9 TYPICAL BEAM BOTTOM FLANGE BRACE
3/4" = 1'-0"

BEAM DEPTH	NO. BOLTS PER ROW	CONN. PLATE	WELD SIZE
W8, W10	2	₱ ⅜"	5/16"
W12, W14	3	₱ ⅜"	5/16"
W16	4	₱ ⅜"	5/16"
W18	5	₱ ⅜"	5/16"
W21	5	₱ ½"	⅜"
W24	6	₱ ½"	⅜"
W27	7	₱ ½"	⅜"
W30	8	₱ ½"	⅜"
W33	9	₱ ½"	⅜"
W36	10	₱ ½"	⅜"

NOTES:
1. R = 1¾" SEE TYP CONNECTION DETAILS. BOLT SPACING AND EDGE DISTANCE SHALL CONFORM TO AISC SPECIFICATIONS.
2. HIGH STRENGTH BOLTS (HSB) ARE GRADE A325-N UNO. PREPARE MATING SURFACES & TIGHTEN "SNUG TIGHT" AS DEFINED IN THE SPECIFICATIONS.
3. USE ASTM A36 CONNECTION PLATES, UNO.
4. A COMPLETE PENETRATION BEVEL WELD MAY BE SUBSTITUTED FOR THE FILLET WELDS SPECIFIED.
5. HOLE SIZE = BOLT SIZE +⅛". SHORT SLOTTED HOLES (+⅛" VERT, + ¼" HORIZ) MAY BE SUBSTITUTED (EXCEPT AS NOTED) ROUND HOLES ARE REQUIRED AT SFRS CONNECTIONS.
6. USE SAME CONNECTIONS AT CHANNELS. FOR W6, C6 & ANGLES USE PLATE, WELD & BOLT SIZE PER W8 & SEE **4/S-5.1**.

1 ⅞"Ø HIGH STRENGTH BOLT (HSB) CONNECTION SCHEDULE
3/4" = 1'-0"

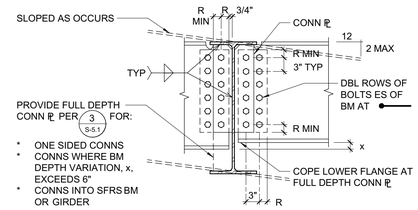

SEE 1 S-5.1 FOR CONN ₱, BOLTS, & WELD

2 TYPICAL BEAM TO BEAM CONNECTION
3/4" = 1'-0"

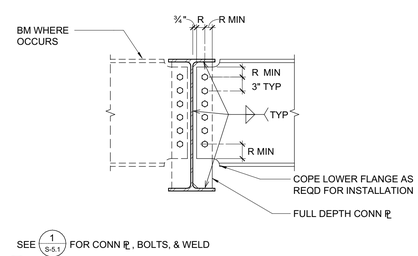

SEE 1 S-5.1 FOR CONN ₱, BOLTS, & WELD

3 TYPICAL FULL DEPTH BEAM TO BEAM CONNECTION
3/4" = 1'-0"

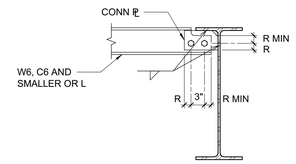

SEE 1 S-5.1 FOR CONN ₱, BOLTS, & WELD

4 TYPICAL SHALLOW BEAM DETAIL
3/4" = 1'-0"

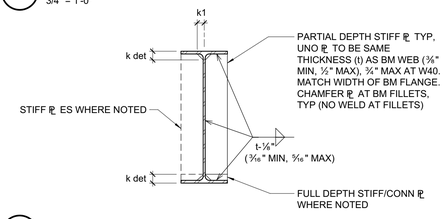

5 TYPICAL BEAM WEB STIFFENER PLATE DETAIL
3/4" = 1'-0"

QUATTROCCHI KWOK ARCHITECTS
Main Office:
636 Fifth Street, Santa Rosa, CA 95404
Pleasanton Office:
600 Main Street, Suite E,
Pleasanton, CA 94566
(707) 576-0829

ZFA STRUCTURAL ENGINEERS
1212 fourth street | suite z **zfa.com**
santa rosa ca 95404 **707.526.0992**
zfa job no. 18254

copyright © 2019

REGISTERED PROFESSIONAL ENGINEER — NILS S. WARNKEN — No. S4613 — STRUCTURAL — STATE OF CALIFORNIA

THIS DOCUMENT AND THE IDEAS INCORPORATED HEREIN, AS AN INSTRUMENT OF PROFESSIONAL SERVICE, IS THE PROPERTY OF THE ENGINEER AND IS NOT TO BE USED, IN WHOLE OR IN PART FOR ANY OTHER PROJECT WITHOUT THE PRIOR WRITTEN AUTHORIZATION OF THE ENGINEER.

FREEDOM HIGH SCHOOL

PERFORMING ARTS AND CTE FACILITIES

1050 NEROLY RD
OAKLEY, CA 94561

LIBERTY UNION HIGH SCHOOL DISTRICT

ZFA NO:	18254
ENGR / PM:	NBB / MJR / AIZ
DRAWING SCALE:	As indicated
PTN:	61721-0068

BID SET

AUGUST 13, 2019

SHEET TITLE

STEEL FRAMING DETAILS

SHEET NUMBER

S-5.1

C:\revit_local\18254_FREEDOM HS PAC_S18C_nikb@zfa.com.rvt
8/5/2019 1:50:18 PM

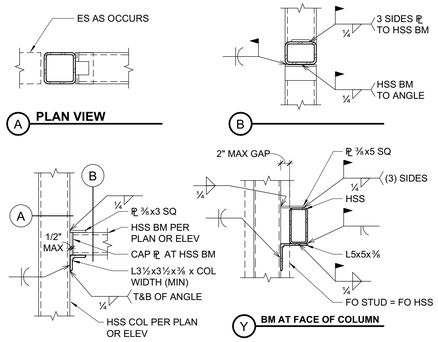

13 HSS BEAM TO HSS COLUMN
3/4" = 1'-0"

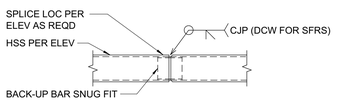

14 HSS SPLICE
3/4" = 1'-0"

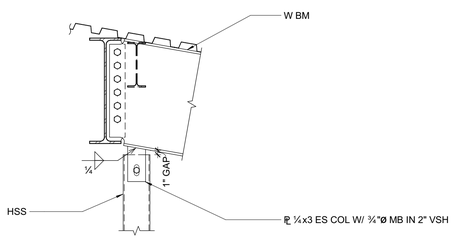

17 TOP OF COLUMN DEFLECTION
3/4" = 1'-0"

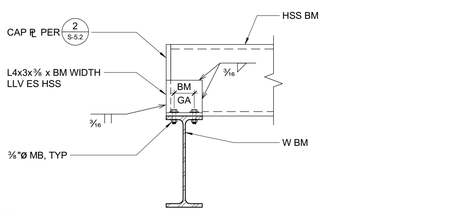

19 HSS BEAM ON WIDE FLANGE BEAM
1 1/2" = 1'-0"

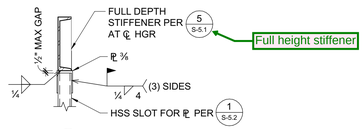

9 HSS HANGER CONNECTIONS
3/4" = 1'-0"

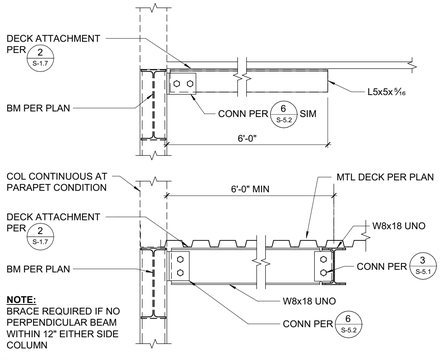

10 COLUMN BRACE
3/4" = 1'-0"

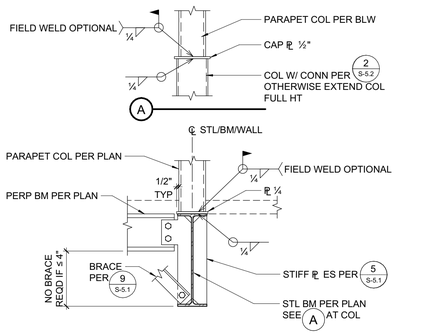

11 HSS PARAPET COLUMN TO BEAM OR TOP OF COLUMN
3/4" = 1'-0"

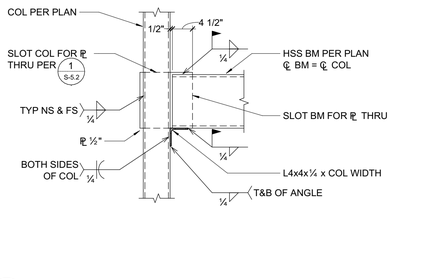

12 HSS BEAM TO HSS COLUMN
3/4" = 1'-0"

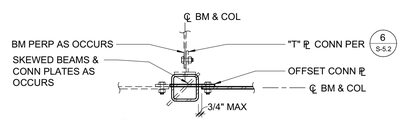

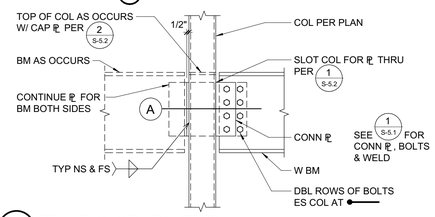

5 BEAM EACH SIDE TO HSS COLUMN
3/4" = 1'-0"

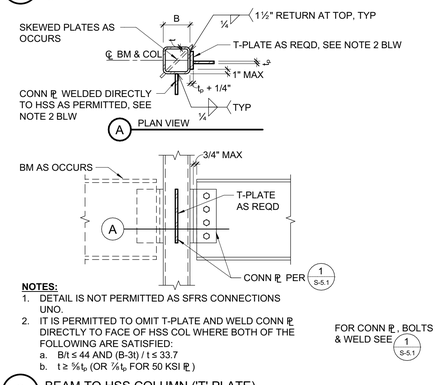

6 BEAM TO HSS COLUMN ('T' PLATE)
3/4" = 1'-0"

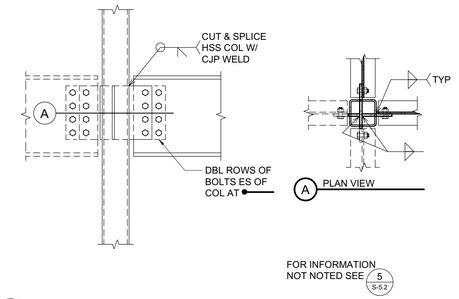

7 BEAM TO HSS COLUMN (2-WAY)
3/4" = 1'-0"

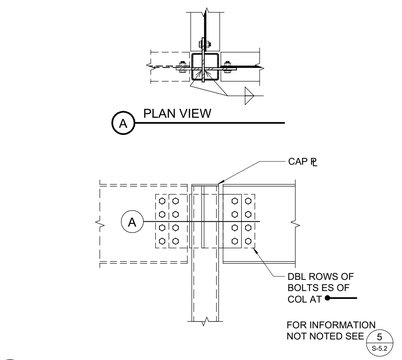

8 BEAM TO HSS COLUMN (2-WAY)
3/4" = 1'-0"

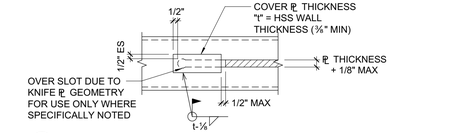

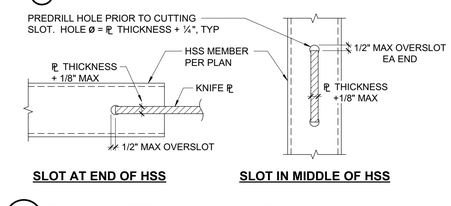

1 TYPICAL SLOTTED HSS FOR GUSSET CONNECTION
1 1/2" = 1'-0"

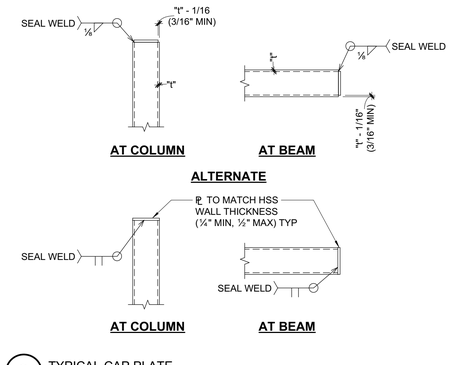

2 TYPICAL CAP PLATE
3/4" = 1'-0"

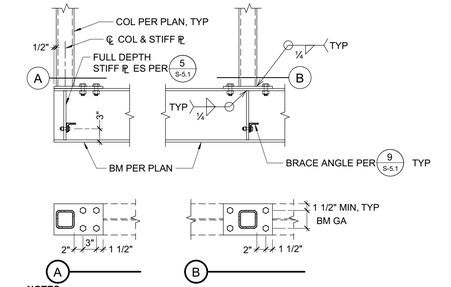

3 COLUMN TO BEAM CONNECTION
3/4" = 1'-0"

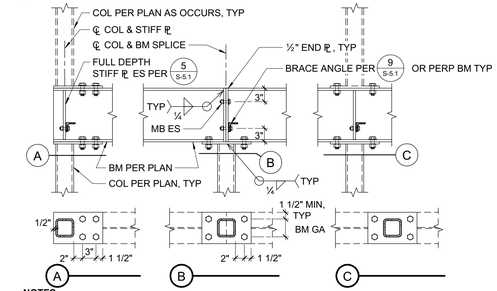

4 COLUMN ABOVE AND BELOW
3/4" = 1'-0"

QUATTROCCHI KWOK ARCHITECTS
Main Office:
636 Fifth Street, Santa Rosa, CA 95404
Pleasanton Office:
600 Main Street, Suite E,
Pleasanton, CA 94566
(707) 576-0829

ZFA STRUCTURAL ENGINEERS
1212 fourth street | suite z **zfa.com**
santa rosa ca 95404 **707.526.0992**
zfa job no. 18254

copyright © 2019

REGISTERED PROFESSIONAL ENGINEER — LOUIS S. WARNER — No. S4813 — STRUCTURAL — STATE OF CALIFORNIA

THIS DOCUMENT AND THE IDEAS INCORPORATED HEREIN, AS AN INSTRUMENT OF PROFESSIONAL SERVICE, IS THE PROPERTY OF THE ENGINEER AND IS NOT TO BE USED, IN WHOLE OR IN PART FOR ANY OTHER PROJECT WITHOUT THE PRIOR WRITTEN AUTHORIZATION OF THE ENGINEER.

FREEDOM HIGH SCHOOL

PERFORMING ARTS AND CTE FACILITIES

1050 NEROLY RD
OAKLEY, CA 94561

LIBERTY UNION HIGH SCHOOL DISTRICT

ZFA NO:	18254
ENGR / PM:	NBB / MJR / AIZ
DRAWING SCALE:	As indicated
PTN:	61721-0068

BID SET

AUGUST 13, 2019

SHEET TITLE

STEEL FRAMING DETAILS

SHEET NUMBER

S-5.2

C:\revit_local\18254_FREEDOM HS PAC_S19C_nkb@zfa.com.rvt
8/5/2019 1:50:22 PM

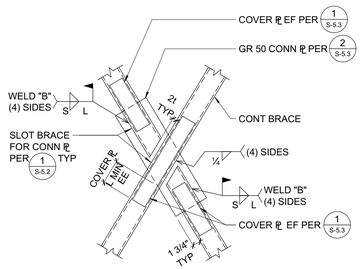

10 CONNECTION PLATE AT DOUBLE BRACE
3/4" = 1'-0"

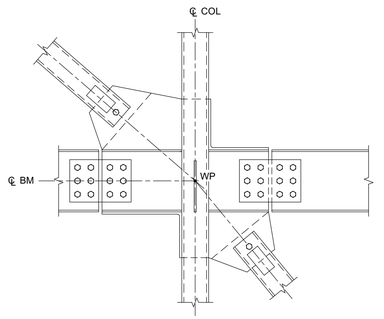

11 SINGLE BRACE BELOW CONNECTION AT COLUMN
3/4" = 1'-0"

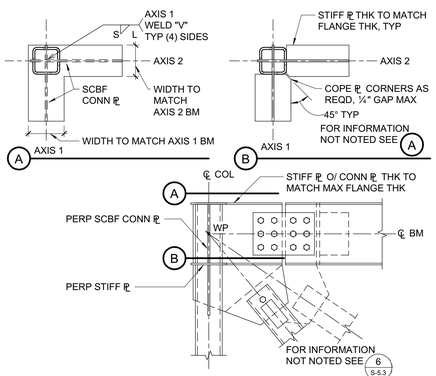

12 DOUBLE BRACE CONNECTION AT CORNER COLUMN
3/4" = 1'-0"

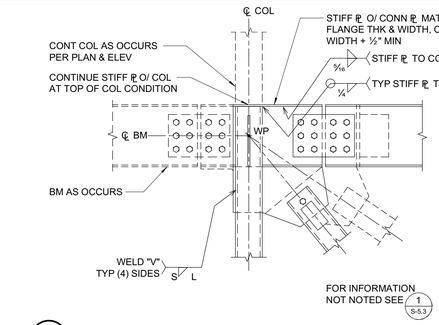

6 SINGLE BRACE BELOW CONNECTION AT COLUMN
3/4" = 1'-0"

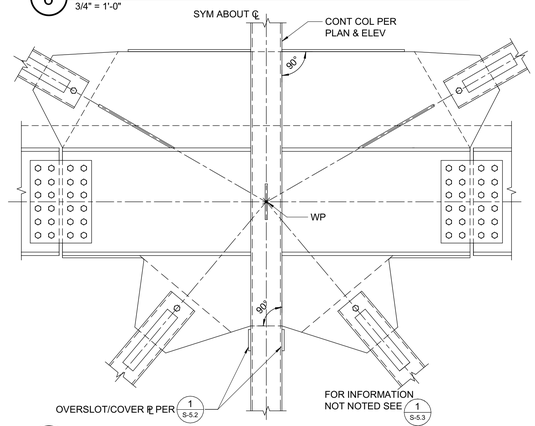

7 4-WAY GUSSET PLATE CONNECTION AT COLUMN
3/4" = 1'-0"

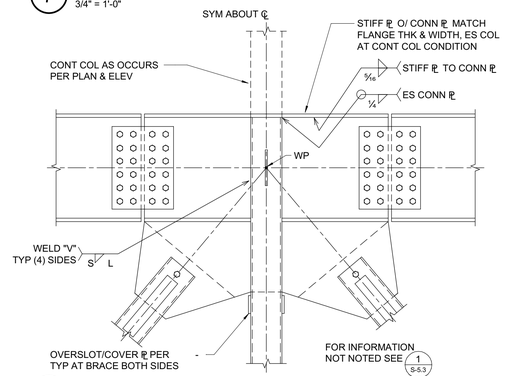

8 DOUBLE BRACE CONNECTION AT COLUMN
3/4" = 1'-0"

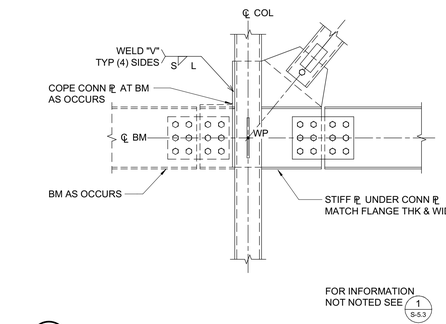

9 SINGLE BRACE ABOVE CONNECTION AT COLUMN
3/4" = 1'-0"

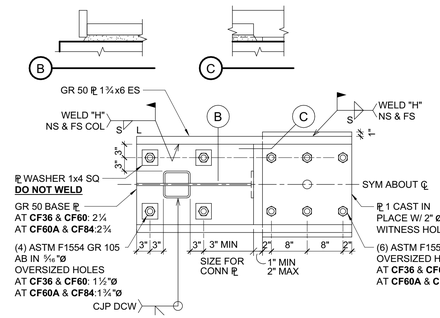

A PLAN VIEW AT BASE PLATE

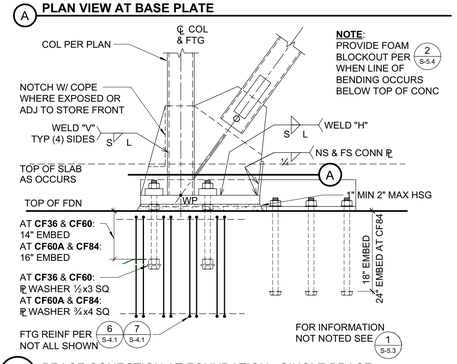

3 BRACE CONECTION AT FOUNDATION - SINGLE BRACE
3/4" = 1'-0"

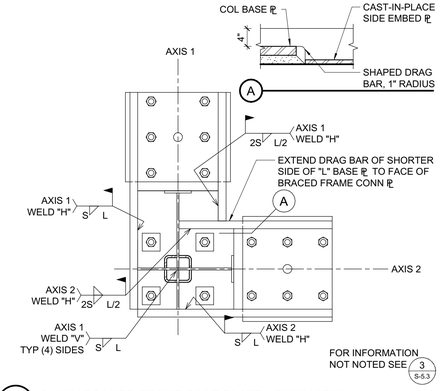

4 2-WAY BRACED FRAME BASE PLATE - PLAN VIEW
3/4" = 1'-0"

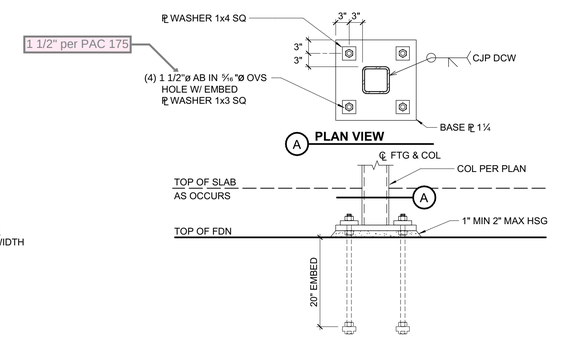

5 HSS COLUMN BASE PLATE
3/4" = 1'-0"

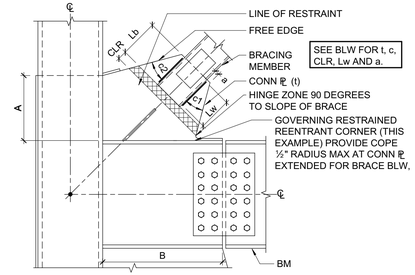

FABRICATION INSTRUCTIONS:

1. VERIFY THAT ANGLE c1 IS SIMILAR TO SPECIFIED ANGLE c2 (+/-2 DEGREES), c_{min} = 30°.
2. DETERMINE A AND B DIMENSIONS BASED UPON PLATE INFORMATION SHOWN.
3. VERIFY THAT THE EXTENSION OF THE HINGE ZONE LINE OF RESTRAINT DOES NOT INTERSECT THE PLATE DIMENSIONS A OR B BUT CROSSES THE FREE EDGE OF THE GUSSET PLATE. (NOTE THAT THE HINGE ZONE LINE OF RESTRAINT STARTS FROM THE GOVERNING RESTRAINED REENTRANT CORNER AT THE END OF DIMENSION B OR A DEPENDING ON THE GEOMETRY OF THE GUSSET USING EQUATIONS IN STEEL TIPS BY ASTANEH-ASL COCHRAN, AND SABELLI [2006] AT WWW.STEELTIPS.ORG)
4. NOTIFY THE STRUCTURAL ENGINEER IF ANY OF THE ABOVE ITEMS CANNOT BE MET.
5. THE DETAILER OR FABRICATOR MAY ADJUST THE A, B AND Lw DIMENSIONS (+/-¼"), AS DETAILED, IN ORDER TO FACILITATE THE FABRICATION OF THE GUSSET PLATE.
6. THE LENGTH OF Lb, THE OVERLAP OF THE BRACE ON THE GUSSET AT EA END, CAN BE SELECTED TO BE EQUAL TO L + 1" AND NEED NOT EXCEED L + 2".

A FABRICATOR NOTES FOR GUSSET PLATE DIMENSIONING

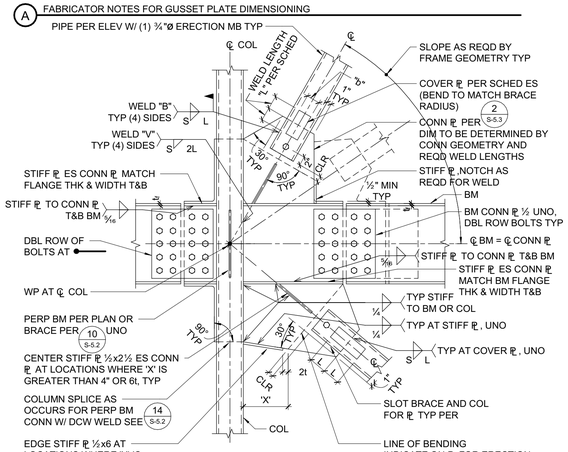

NOTES:

1. SEE FRAME ELEV FOR BRACE ANGLE AND CONFIGURATION. BRACE ANGLE DETAIL APPLIES EQUALLY TO ABOVE & BELOW BEAM.
2. FOR BRACES CONN ℄ AND WELDS NOT SHOWN SEE BRACE SCHEDULE **2/S-5.3**.
3. FOR BEAM CONN ℄ BOLTS AND WELDS NOT SHOWN SEE BEAM SCHEDULE **1/S-5.1**.
4. t = CONN ℄ THICKNESS PER **2/S-5.3**.
5. CLR = 2t MIN, 3t MAX
6. WELD LENGTHS ARE MINIMUMS SEE **2/S-5.3** NOTE #2.
7. CONNECTIONS ARE A PART OF THE SFRS.
8. PROVIDE METAL DECK SUPPORT PER **2/S-1.7** SIMILAR AS REQUIRED.

1 BRACED FRAME CONNECTION
3/4" = 1'-0"

BRACE SIZE	CONN PLATE THICKNESS, t	WELD "B" BRACE		WELD "H" HORIZ CONN		WELD "V" VERT CONN		COVER ℄		COVER ℄ WELD	
		S	MIN L[2]	S	MIN L[2]	S	MIN L[2]	t	b	S	MIN L
PIPE 4 STD	½"	⅜₁₆"	10"	⅝₁₆"	12"	⅝₁₆"	6"	¼"	2"	¼"	3"
PIPE 5 STD	⅝"		14"		13"		8"		2½"		
PIPE 6 STD	¾"	⅝₁₆"	11"		17"		10"		4"		5"
PIPE 6 XS	1"		16"		23"		13"		4¼"		

NOTES:

1. COMPLETE JOINT PENETRATION GROOVE WELDS MAY BE SUBSTITUTED FOR SPECIFIED FILLET WELDS.
2. WHEN WELD LENGTHS SPECIFIED ARE LESS THAN PLATE LENGTH, PROVIDE EXTENDED WELD FOR LENGTH OF PLATE.
3. WHERE TWO (2) CONNECTION PLATE THICKNESSES ARE SPECIFIED FOR A CONNECTION DUE TO SMALLER BRACE ABOVE AND BIGGER BRACE BELOW, USE SINGLE FULL THICKNESS OF THICKER PLATE.

2 BRACED FRAME CONNECTION SCHEDULE
3/4" = 1'-0"

QUATTROCCHI KWOK ARCHITECTS
Main Office:
636 Fifth Street, Santa Rosa, CA 95404
Pleasanton Office:
600 Main Street, Suite E,
Pleasanton, CA 94566
(707) 576-0829

ZFA STRUCTURAL ENGINEERS
1212 fourth street | suite z zfa.com
santa rosa ca 95404 707.526.0992
zfa job no. 18254

copyright © 2019

REGISTERED PROFESSIONAL ENGINEER — NIS S. WARNER — No. S4813 — STRUCTURAL — STATE OF CALIFORNIA

THIS DOCUMENT AND THE IDEAS INCORPORATED HEREIN, AS AN INSTRUMENT OF PROFESSIONAL SERVICE, IS THE PROPERTY OF THE ENGINEER AND IS NOT TO BE USED, IN WHOLE OR IN PART FOR ANY OTHER PROJECT WITHOUT THE PRIOR WRITTEN AUTHORIZATION OF THE ENGINEER.

FREEDOM HIGH SCHOOL

PERFORMING ARTS AND CTE FACILITIES

1050 NEROLY RD
OAKLEY, CA 94561

LIBERTY UNION HIGH SCHOOL DISTRICT

ZFA NO:	18254
ENGR / PM:	NBB / MJR / AIZ
DRAWING SCALE:	3/4" = 1'-0"
PTN:	61721-0068

BID SET

AUGUST 13, 2019

SHEET TITLE

STEEL BRACED FRAME DETAILS

SHEET NUMBER

S-5.3

C:\revit_local\18254_FREEDOM HS PAC_S18C_nikb@zfa.com.rvt

8/5/2019 1:50:26 PM

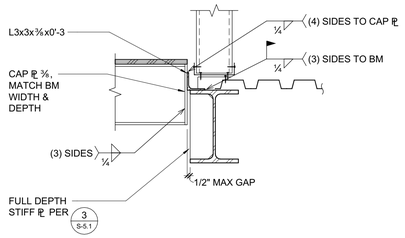

13 STEPPED BEAM CONNECTION
1" = 1'-0"

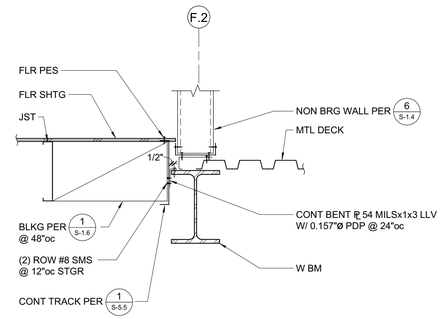

9 FLOOR STEP AT TECH LEDGE/LOW ROOF
1" = 1'-0"

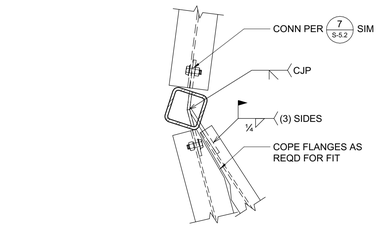

5 SKEWED BEAM TO COLUMN CONNECTION
1" = 1'-0"

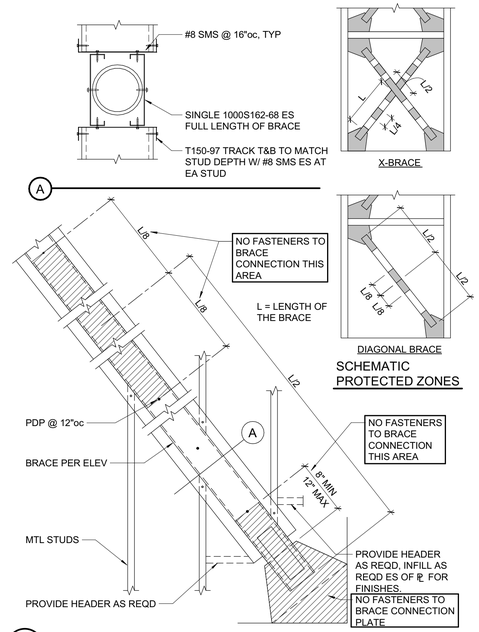

1 METAL STUD INFILL AT BRACED FRAME
3/4" = 1'-0"

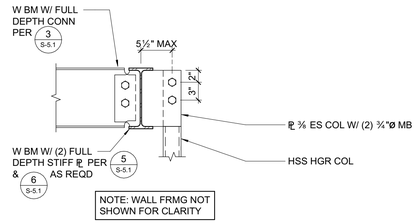

14 HANGER COLUMN
1" = 1'-0"

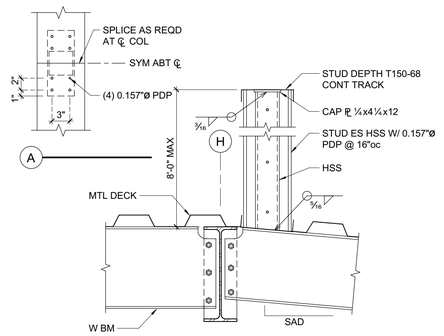

10 PARAPET FRAMING
1" = 1'-0"

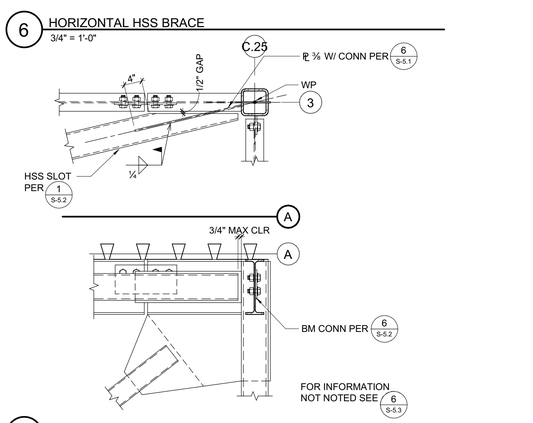

6 HORIZONTAL HSS BRACE
3/4" = 1'-0"

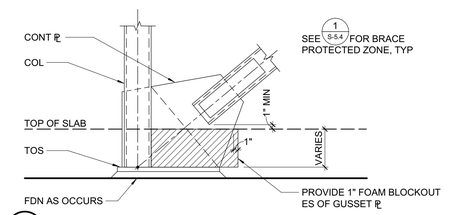

2 BLOCKOUT AT BRACED FRAME
3/4" = 1'-0"

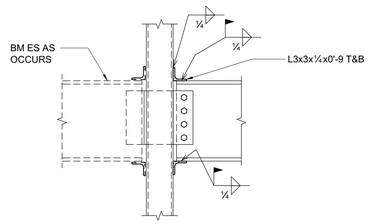

FOR INFORMATION NOT NOTED SEE 5 S-5.2

15 TORSION CONNECTION
3/4" = 1'-0"

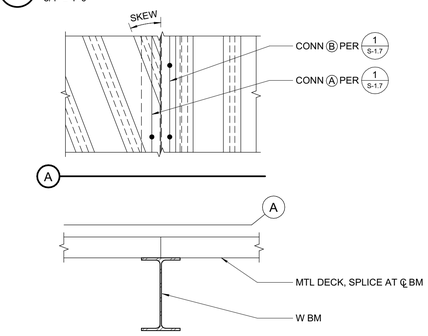

16 SKEWED METAL DECK CONNECTION
1" = 1'-0"

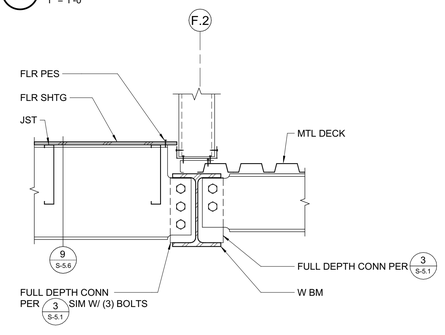

FOR INFORMATION NOT NOTED SEE 9 S-5.4

11 OFFSET BEAM CONNECTION AT FLOOR STEP
1" = 1'-0"

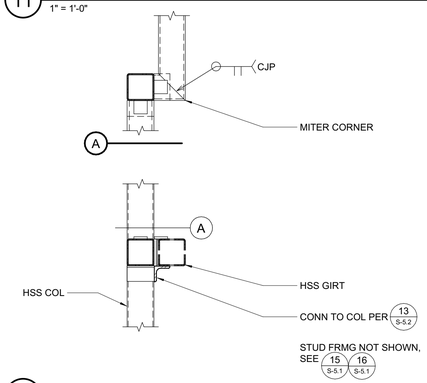

12 HSS BEAM TO HSS COLUMN
3/4" = 1'-0"

7 HSS BRACE
3/4" = 1'-0"

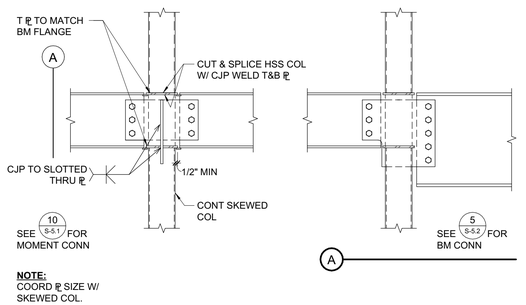

8 COLUMN SPLICE BEAM CONNECTION
3/4" = 1'-0"

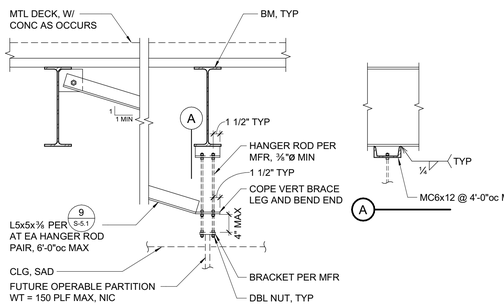

4 PARTITION SUPPORT
3/4" = 1'-0"

C:\revit_local\18254_FREEDOM HS PAC_S18C_nikb@zfa.com.rvt
8/5/2019 1:50:29 PM

QUATTROCCHI KWOK ARCHITECTS
Main Office:
636 Fifth Street, Santa Rosa, CA 95404
Pleasanton Office:
600 Main Street, Suite E,
Pleasanton, CA 94566
(707) 576-0829

ZFA STRUCTURAL ENGINEERS
1212 fourth street | suite z **zfa.com**
santa rosa ca 95404 **707.526.0992**
zfa job no. 18254
copyright © 2019



THIS DOCUMENT AND THE IDEAS INCORPORATED HEREIN, AS AN INSTRUMENT OF PROFESSIONAL SERVICE, IS THE PROPERTY OF THE ENGINEER AND IS NOT TO BE USED, IN WHOLE OR IN PART FOR ANY OTHER PROJECT WITHOUT THE PRIOR WRITTEN AUTHORIZATION OF THE ENGINEER.

FREEDOM HIGH SCHOOL

PERFORMING ARTS AND CTE FACILITIES

1050 NEROLY RD
OAKLEY, CA 94561

LIBERTY UNION HIGH SCHOOL DISTRICT

ZFA NO:	18254
ENGR / PM:	NBB / MJR / AIZ
DRAWING SCALE:	As indicated
PTN:	61721-0068

BID SET

AUGUST 13, 2019

SHEET TITLE

STEEL BRACED FRAME & FRAMING DETAILS

SHEET NUMBER

S-5.4

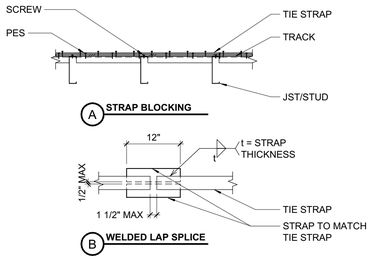

TIE STRAP SCHEDULE						
MARK	STRAP	MIN. SCREWS ES OF ◆	MAX. SCREW SPACING (SEE NOTES #1 & #2)			MIN. END LENGTH (EL)
			CASE 1	CASE 2		
				EL	RL	
Ⓐ	CS14	(13) #10	#10 @ 4"oc	FILL ALL HOLES	#10 @ 4"oc	16"
Ⓑ	CMSTC16	(25) #10	#10 @ 2"oc	FILL ALL HOLES	#10 @ 3"oc	24"

1. CASE 1 APPLIES UNLESS END LENGTH (EL) IS NOTED ON PLANS. WHERE END LENGTH (EL) IS NOTED, SEE CASE 2.



CASE 1 **CASE 2**

2. AS REQUIRED, PROVIDE CLOSER SCREW SPACING TO MEET MINIMUM SCREWING EACH SIDE OF ◆.
3. LOCATE STRAPS OVER SHEATHING AND BLOCK UNDER SHEATHING W/ FLAT 40DT125-68 WHERE NO FRAMING OCCURS PER Ⓐ, UNO. NOTCH FLANGES OF TRACK & INSTALL (2) #10 SMS AT EACH STUD/JOIST.
4. SEE PLANS FOR STRAP LENGTHS, LOCATIONS AND DETAILS, UNO.
5. SPLICE STRAPS AS SHOWN WHERE LENGTH PER PLAN EXCEEDS AVAILABLE PRODUCT LENGTH PER Ⓑ.

12 TIE STRAP SCHEDULE AT LIGHT GAUGE FRAMING
3/4" = 1'-0"

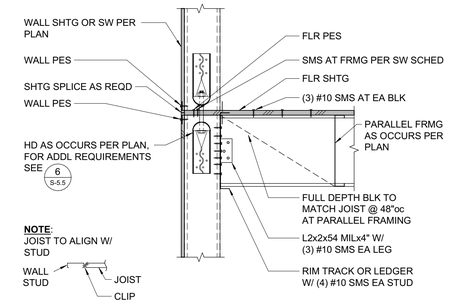

8 HOLDOWN AT FLOOR
1" = 1'-0"

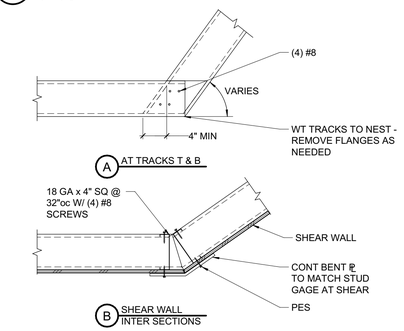

9 SKEWED WALLS
1" = 1'-0"

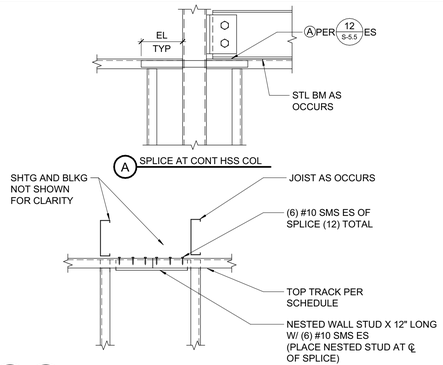

5 5A TYPICAL METAL STUD TOP PLATE SPLICE
1" = 1'-0"

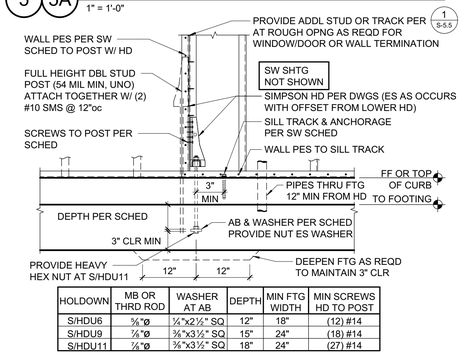

HOLDOWN	MB OR THRD ROD	WASHER AT AB	DEPTH	MIN FTG WIDTH	MIN SCREWS HD TO POST
S/HDU6	⅝"ø	¼"x2½" SQ	12"	18"	(12) #14
S/HDU9	⅞"ø	⅜"x3½" SQ	15"	24"	(18) #14
S/HDU11	1⅛"ø	⅜"x3½" SQ	18"	24"	(27) #14

6 MTL STUD HD DETAIL
3/4" = 1'-0"

LIGHT GAGE PAC MEZZANINE FRAMING SCHEDULE				
LOCATION	MINIMUM MEMBER SIZE	MAX SPAN/LENGTH	MAX SPACING	NOTES
FLOOR JOIST	1000S162-54	16'-0"	16"oc	
BEARING WALLS (INT OR EXT)	600S163-43	9'-0"	16"oc	
	600S163-43	18'-0"	16"oc	
HEADERS AT BEARING WALL	1000L150-54	b ≤ 4'-0"	⊓	3/S-5.5 4/S-5.5
	(2) 1000L150-54	b ≤ 12'-0"	⊓⊓	3/S-5.5

1. TYP TRACK TO BE SAME GAUGE AS STUD OR 43 MILS MIN, UNO. FLANGE TO BE 1½" MIN.
2. ALL BEARING WALL JAMB AND SILL STUDS PER 4/S-1.5 AND 3/S-1.6.
3. TYP WALL BRIDGING/BLKG PER 1/S-1.6.
4. TYP STUD/JOIST TO TRACK PER 7/S-1.4.
5. COORDINATE STUD DEPTH W/ ARCH DRAWINGS. INCREASE MIN HDR, SILL OR JAMB MEMBER DEPTHS AS REQD TO MATCH ACTUAL WALL STUD DEPTH.
6. "b" INDICATES OPENING WIDTH PER 2/S-5.5 .

1 SCHEDULE
3/4" = 1'-0"

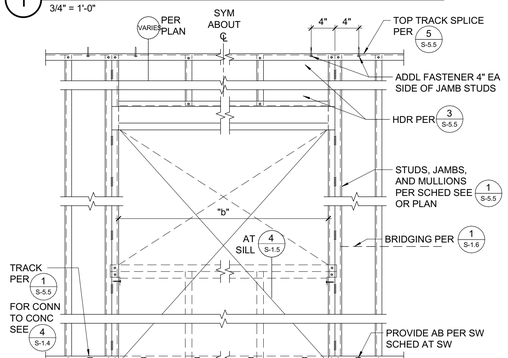

2 INTERIOR BEARING WALL
1" = 1'-0"

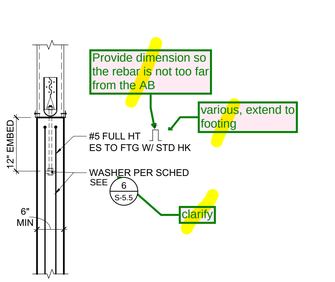

6A S/HDU AT CONCRETE WALL
3/4" = 1'-0"

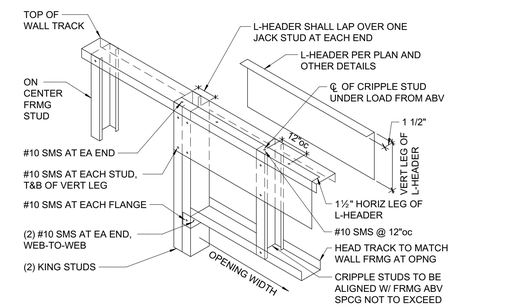

3 L-HEADER
1" = 1'-0"

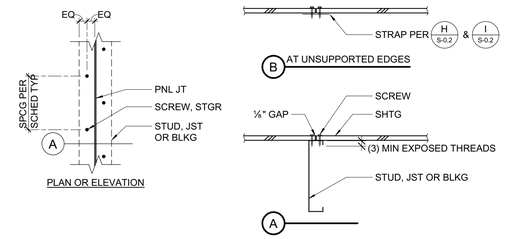

NOTE:
JOINTS ARE TO BE CENTERED OVER BEARING. SCREW HEADS SHALL BE DRIVEN FLUSH WITH SHEATHING.

14 SHEATHING SCREWING
1 1/2" = 1'-0"

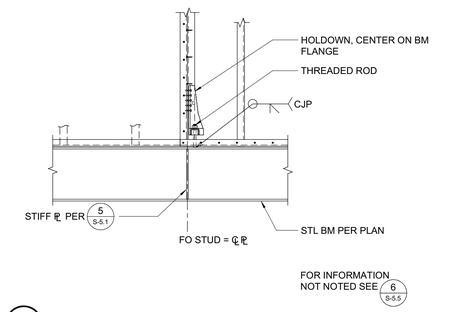

10 NORTH WALL GIRT
3/4" = 1'-0"

11 HOLDOWN TO STEEL BEAM
3/4" = 1'-0"

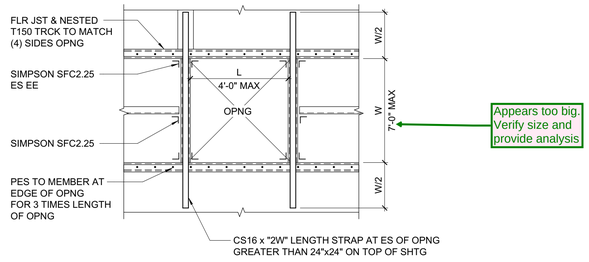

7 FLOOR OPENINGS
3/4" = 1'-0"

4 NOT USED
1" = 1'-0"

QUATTROCCHI KWOK ARCHITECTS
Main Office:
636 Fifth Street, Santa Rosa, CA 95404
Pleasanton Office:
600 Main Street, Suite E,
Pleasanton, CA 94566
(707) 576-0829

ZFA STRUCTURAL ENGINEERS
1212 fourth street | suite z **zfa.com**
santa rosa ca 95404 **707.526.0992**
zfa job no. 18254

copyright © 2019



THIS DOCUMENT AND THE IDEAS INCORPORATED HEREIN, AS AN INSTRUMENT OF PROFESSIONAL SERVICE, IS THE PROPERTY OF THE ENGINEER AND IS NOT TO BE USED, IN WHOLE OR IN PART FOR ANY OTHER PROJECT WITHOUT THE PRIOR WRITTEN AUTHORIZATION OF THE ENGINEER.

FREEDOM HIGH SCHOOL

PERFORMING ARTS AND CTE FACILITIES

1050 NEROLY RD
OAKLEY, CA 94561

LIBERTY UNION HIGH SCHOOL DISTRICT

ZFA NO:	18254
ENGR / PM:	NBB / MJR / AIZ
DRAWING SCALE:	As indicated
PTN:	61721-0068

BID SET

AUGUST 13, 2019

SHEET TITLE

BEARING COLD FORMED STEEL AND STEEL DETAILS

SHEET NUMBER

S-5.5

C:\revit_local\18254_FREEDOM HS PAC_S16C_nikk@zfa.com.rvt
8/5/2019 1:50:31 PM

Details referred to are for metal deck condition. Provide blocking between joists to receive screws from the clip top and bottom. provide connection details for the blocking.

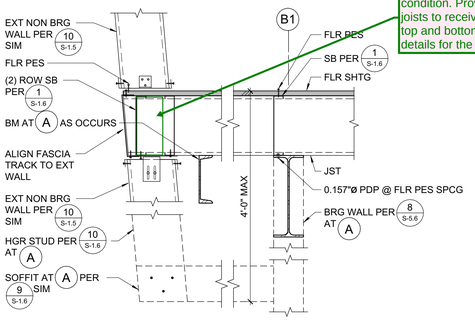

13 13A SLOPED WALL
1" = 1'-0"

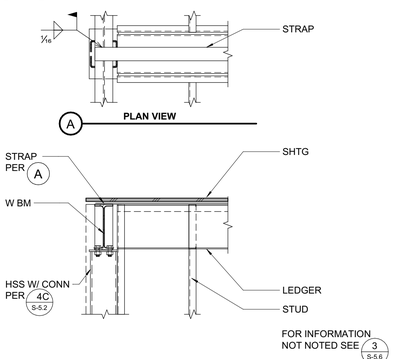

14 COLUMN BRACE AT SHEAR WALL
3/4" = 1'-0"

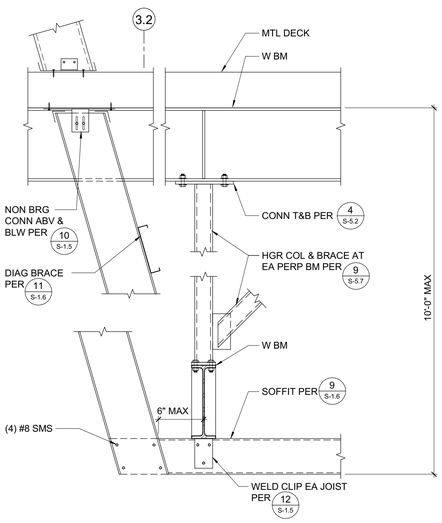

15 INTERIOR SLOPED SOFFIT
1" = 1'-0"

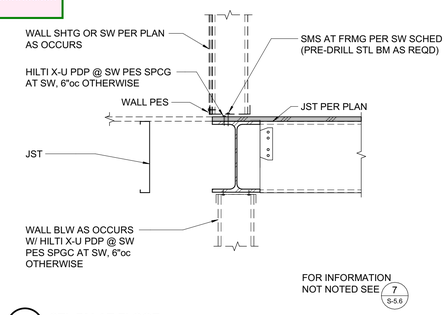

9 STL BM AT FLOOR
1" = 1'-0"

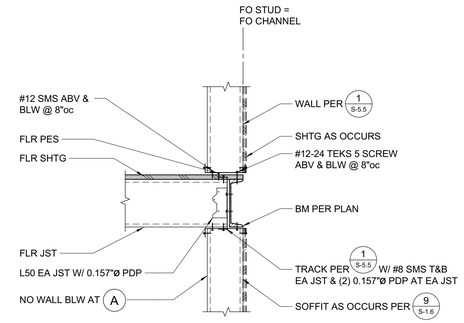

10 10A METAL STUD AT CHANNEL BEAM
1" = 1'-0"

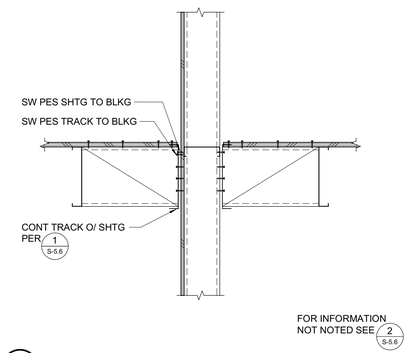

11 WALL ABOVE & BELOW PARALLEL TO FRAMING
1" = 1'-0"

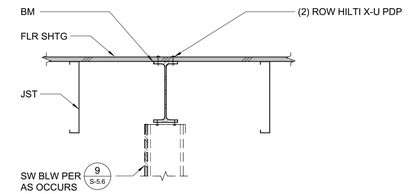

12 STL BM AT FLOOR
1" = 1'-0"

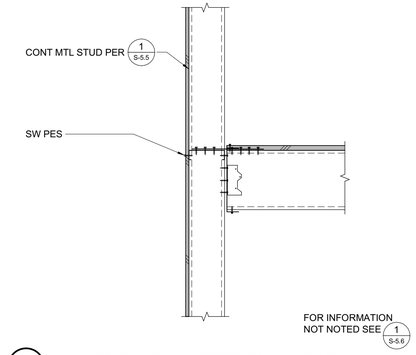

5 WALL ABOVE & BELOW PERPENDICULAR TO FRAMING
1" = 1'-0"

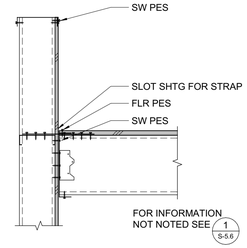

6 PARAPET PERPENDICULAR TO FRAMING
1" = 1'-0"

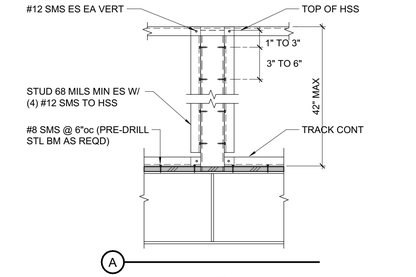

7 STL BM AT FLOOR
1" = 1'-0"

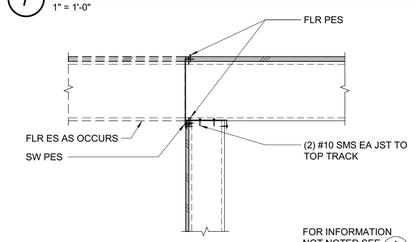

8 WALL PERPENDICULAR TO PLATFORM FRAMING
1" = 1'-0"

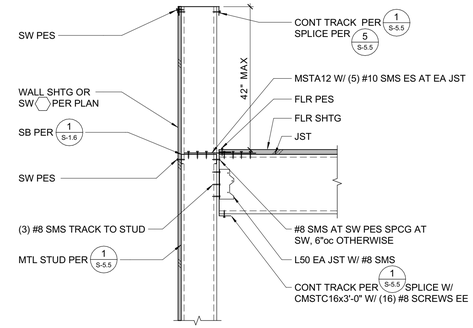

1 PARAPET PERPENDICULAR TO FRAMING
1" = 1'-0"

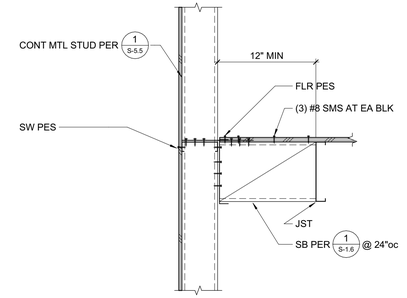

2 WALL ABOVE & BELOW PARALLEL TO FRAMING
1" = 1'-0"

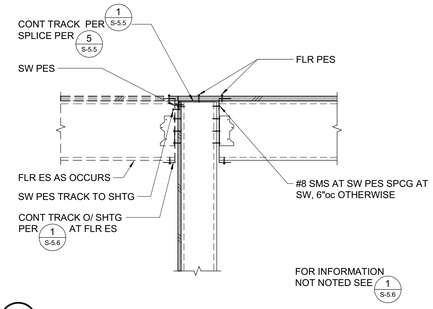

3 WALL PERPENDICULAR TO FRAMING
1" = 1'-0"

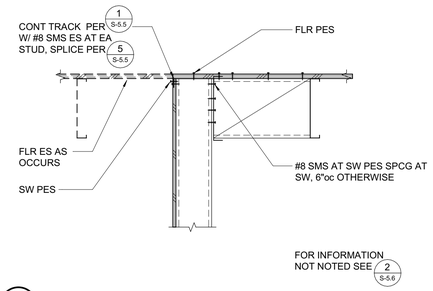

4 WALL PARALLEL TO FRAMING
1" = 1'-0"

QUATTROCCHI KWOK ARCHITECTS
Main Office:
636 Fifth Street, Santa Rosa, CA 95404
Pleasanton Office:
600 Main Street, Suite E,
Pleasanton, CA 94566
(707) 576-0829

ZFA STRUCTURAL ENGINEERS
1212 fourth street | suite z **zfa.com**
santa rosa ca 95404 **707.526.0992**
zfa job no. 18254 **copyright © 2019**



THIS DOCUMENT AND THE IDEAS INCORPORATED HEREIN, AS AN INSTRUMENT OF PROFESSIONAL SERVICE, IS THE PROPERTY OF THE ENGINEER AND IS NOT TO BE USED, IN WHOLE OR IN PART FOR ANY OTHER PROJECT WITHOUT THE PRIOR WRITTEN AUTHORIZATION OF THE ENGINEER.

FREEDOM HIGH SCHOOL

PERFORMING ARTS AND CTE FACILITIES

1050 NEROLY RD
OAKLEY, CA 94561

LIBERTY UNION HIGH SCHOOL DISTRICT

ZFA NO:	18254
ENGR / PM:	NBB / MJR / AIZ
DRAWING SCALE:	As indicated
PTN:	61721-0068

BID SET

AUGUST 13, 2019

SHEET TITLE

COLD FORMED STEEL DETAILS

SHEET NUMBER

S-5.6

C:\revit_local\18254_FREEDOM HS PAC_S18C_nikb@zfa.com.rvt
8/5/2019 1:50:34 PM

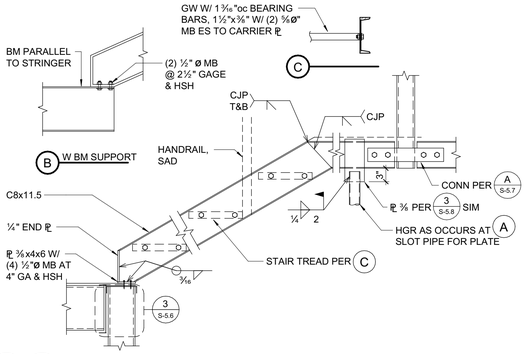

8 8A CATWALK STRINGER

3/4" = 1'-0"

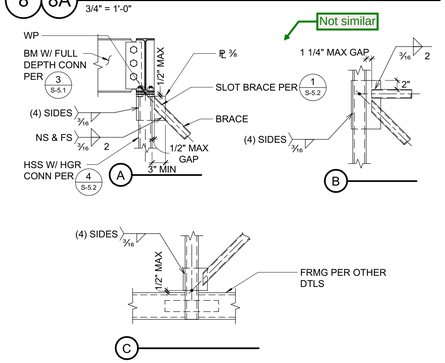

9 LONGITUDINAL BRACING

3/4" = 1'-0"

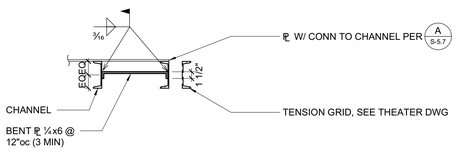

10 CATWALK AT BRACED FRAME COLUMN

3/4" = 1'-0"

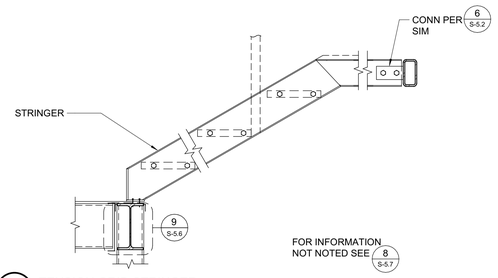

11 TENSION GRID STRINGER

3/4" = 1'-0"

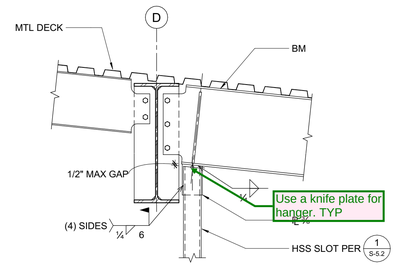

3 HANGER COLUMN AT PROSCENIUM BEAM

3/4" = 1'-0"

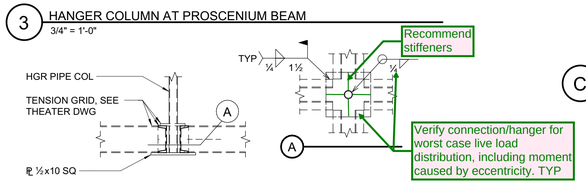

4 INTERIOR TENSION GRID HANGER

3/4" = 1'-0"

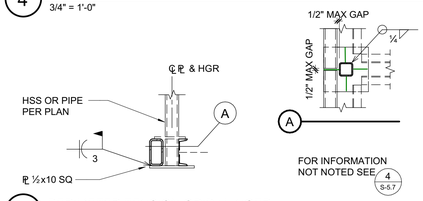

5 PERIMETER TENSION GRID HANGER

3/4" = 1'-0"

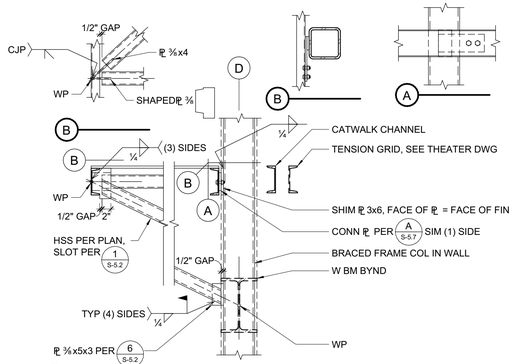

6 CATWALK BRACE AT BRACED FRAME COLUMN

3/4" = 1'-0"

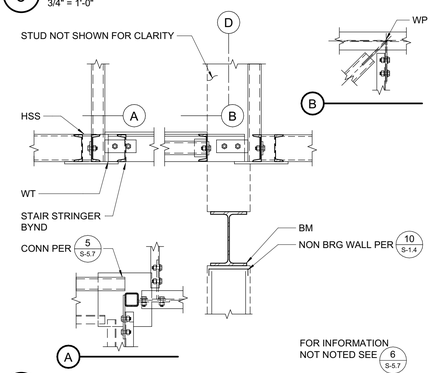

7 CATWALK BRACE AT STAIR

3/4" = 1'-0"

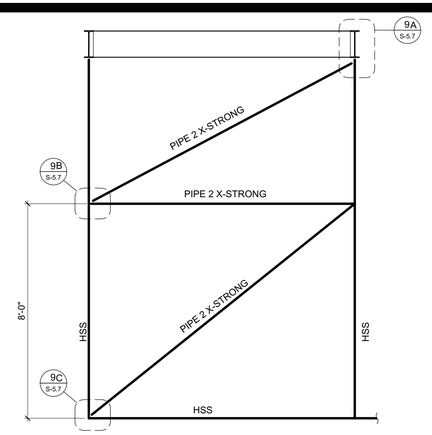

C FRAME

3/8" = 1'-0"

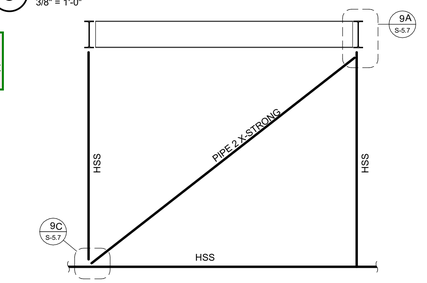

D FRAME

3/8" = 1'-0"

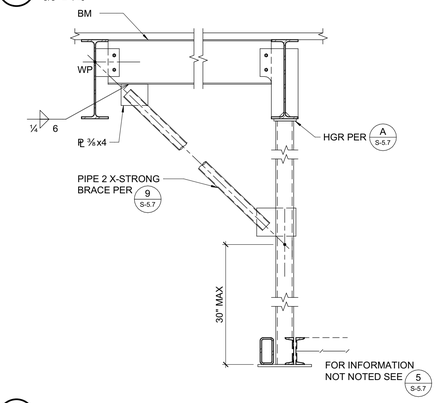

1 TENSION GRID BRACE

3/4" = 1'-0"

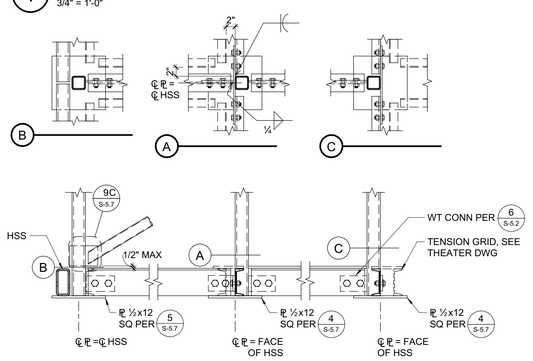

2 TENSION GRID & CATWALK CONNECTION

3/4" = 1'-0"

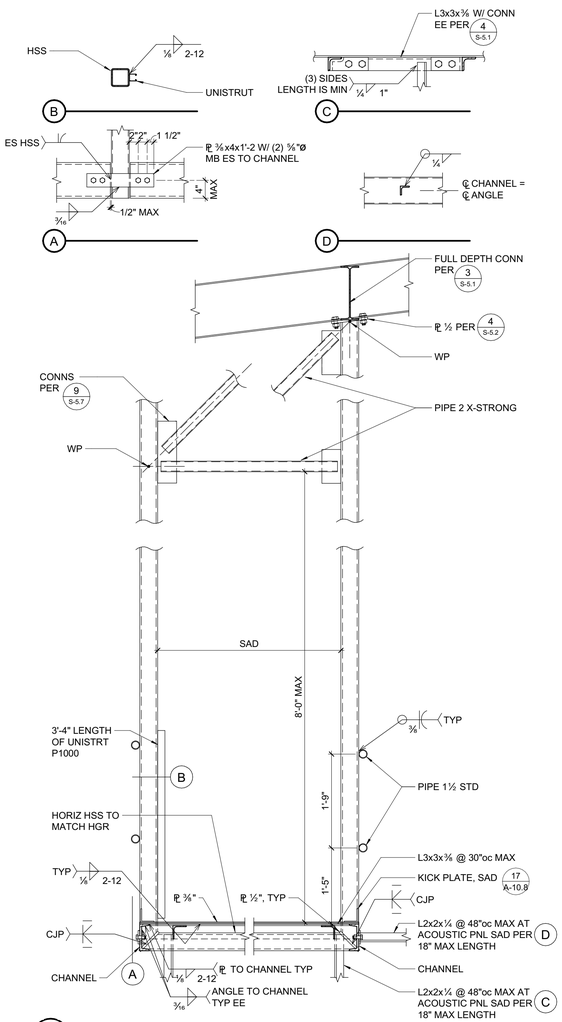

A TYPICAL CATWALK HANGER FRAME

3/4" = 1'-0"

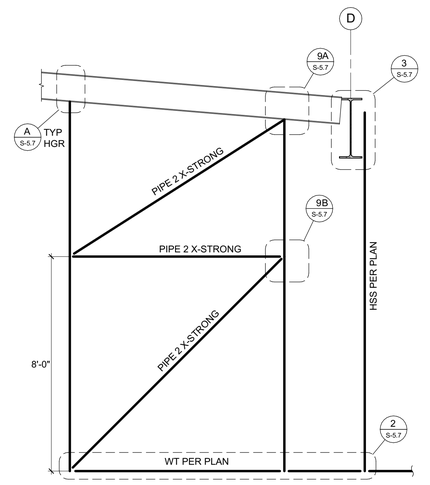

B FRAME

3/8" = 1'-0"

QUATTROCCHI KWOK ARCHITECTS
Main Office:
636 Fifth Street, Santa Rosa, CA 95404
Pleasanton Office:
600 Main Street, Suite E,
Pleasanton, CA 94566
(707) 576-0829

ZFA STRUCTURAL ENGINEERS
1212 fourth street | suite z **zfa.com**
santa rosa ca 95404 **707.526.0992**
zfa job no. 18254

copyright © 2019

REGISTERED PROFESSIONAL ENGINEER — NIKLAS S. WARNER — No. S4813 — STRUCTURAL — STATE OF CALIFORNIA

THIS DOCUMENT AND THE IDEAS INCORPORATED HEREIN, AS AN INSTRUMENT OF PROFESSIONAL SERVICE, IS THE PROPERTY OF THE ENGINEER AND IS NOT TO BE USED, IN WHOLE OR IN PART FOR ANY OTHER PROJECT WITHOUT THE PRIOR WRITTEN AUTHORIZATION OF THE ENGINEER.

FREEDOM HIGH SCHOOL

PERFORMING ARTS AND CTE FACILITIES

1050 NEROLY RD
OAKLEY, CA 94561

LIBERTY UNION HIGH SCHOOL DISTRICT

ZFA NO:	18254
ENGR / PM:	NBB / MJR / AIZ
DRAWING SCALE:	As indicated
PTN:	61721-0068

BID SET

AUGUST 13, 2019

SHEET TITLE

CATWALK AND PROSCENIUM DETAILS

SHEET NUMBER

S-5.7

C:\revit_local\18254_FREEDOM HS PAC_S18C_nikb@zfa.com.rvt
8/5/2019 1:50:37 PM

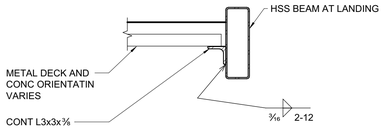

6 LANDING CONNECTION
1" = 1'-0"

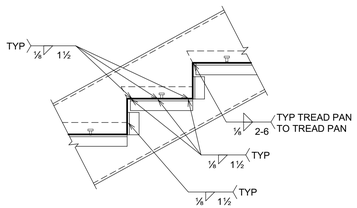

A TREAD PAN TO ANGLE SUPPORTS

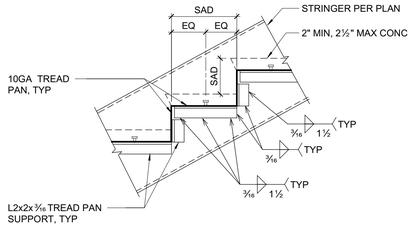

B ANGLE SUPPORTS TO STRINGER

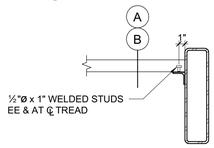

7 TREAD TO STRINGER CONNECTION
1" = 1'-0"

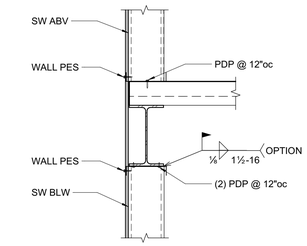

9 STL BM AT FLOOR
1" = 1'-0"

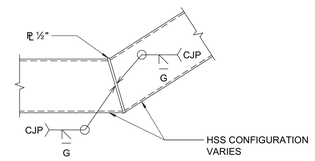

2 SHAPED STRINGER CONNECTION
3/4" = 1'-0"

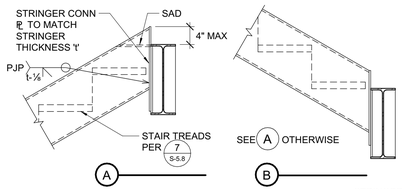

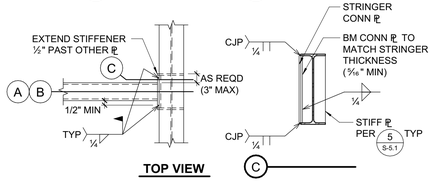

3 STRINGER CONNECTION TO W BEAM
3/4" = 1'-0"

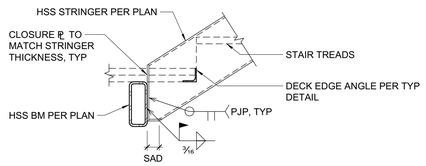

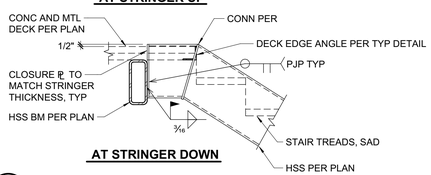

4 STRINGER TO HSS BEAM
3/4" = 1'-0"

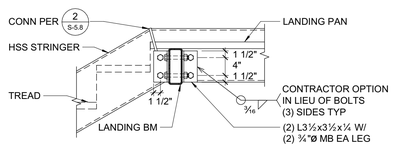

5 SHAPED STRINGER SUPPORTING LANDING BEAM
3/4" = 1'-0"

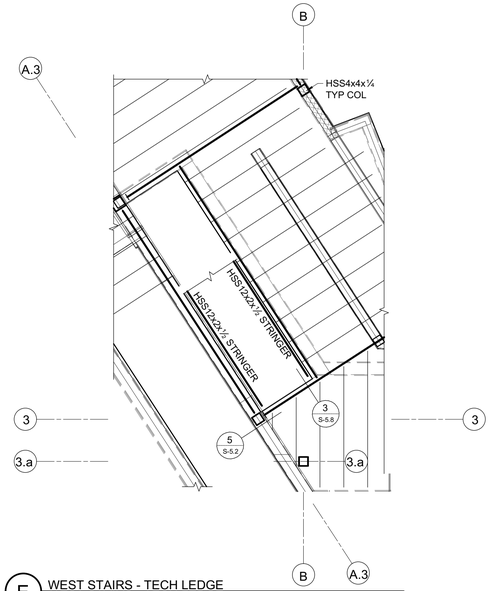

E WEST STAIRS - TECH LEDGE
1/4" = 1'-0"

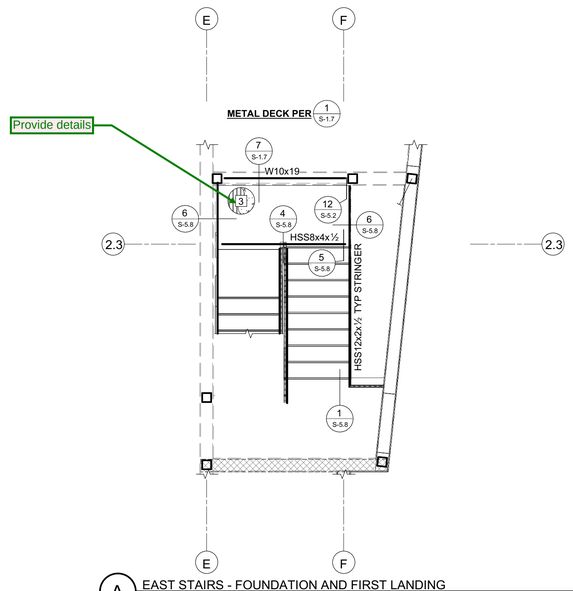

A EAST STAIRS - FOUNDATION AND FIRST LANDING
1/4" = 1'-0"

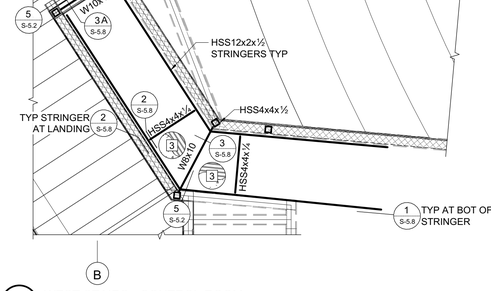

D WEST STAIRS - CONTROL ROOM
1/4" = 1'-0"

STAIR FRAMING NOTES:

1. SEE PLANS FOR ALL COLUMN AND BEAM SIZES NOT SHOWN.
2. METAL DECK (1) IS PER **1/S-1.7**
3. W16x26 INDICATES BEAM SIZE. WHERE NO CAMBER IS SPECFIED FABRICATE BEAM WITH NATURAL CAMBER UP.
4. ▷— INDICATES NON-FRAME MOMENT RESISTING CONNECTION PER **15/S-5.4**.

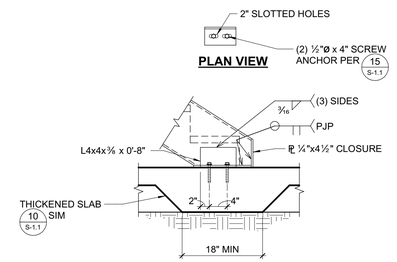

1 BOTTOM OF STRINGER TO CONC FLOOR
3/4" = 1'-0"

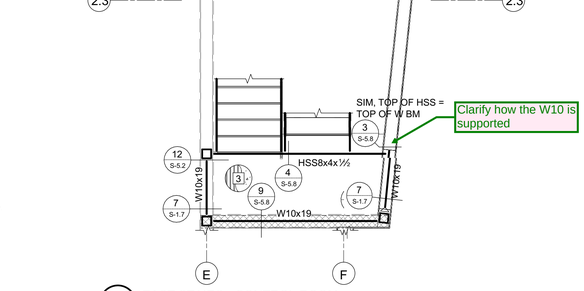

B EAST STAIRS - CONTROL ROOM
1/4" = 1'-0"

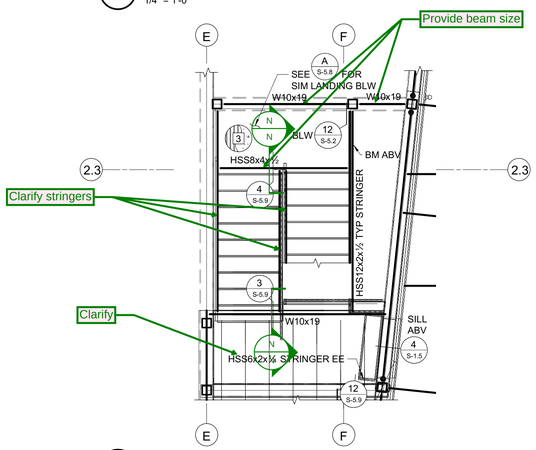

C EAST STAIRS - THIRD LANDING AND TECH LEDGE
1/4" = 1'-0"

QUATTROCCHI KWOK ARCHITECTS
Main Office:
636 Fifth Street, Santa Rosa, CA 95404
Pleasanton Office:
600 Main Street, Suite E,
Pleasanton, CA 94566
(707) 576-0829

ZFA STRUCTURAL ENGINEERS
1212 fourth street | suite z **zfa.com**
santa rosa ca 95404 **707.526.0992**
zfa job no. 18254 **copyright © 2019**



THIS DOCUMENT AND THE IDEAS INCORPORATED HEREIN, AS AN INSTRUMENT OF PROFESSIONAL SERVICE, IS THE PROPERTY OF THE ENGINEER AND IS NOT TO BE USED, IN WHOLE OR IN PART FOR ANY OTHER PROJECT WITHOUT THE PRIOR WRITTEN AUTHORIZATION OF THE ENGINEER.

FREEDOM HIGH SCHOOL

PERFORMING ARTS AND CTE FACILITIES

1050 NEROLY RD
OAKLEY, CA 94561

LIBERTY UNION HIGH SCHOOL DISTRICT

ZFA NO:	18254
ENGR / PM:	NBB / MJR / AIZ
DRAWING SCALE:	As indicated
PTN:	61721-0068

BID SET

AUGUST 13, 2019

SHEET TITLE

STEEL STAIR DETAILS

SHEET NUMBER

S-5.8

C:\revit_local\18254_FREEDOM HS PAC_S18C_nikb@zfa.com.rvt
8/5/2019 1:50:41 PM

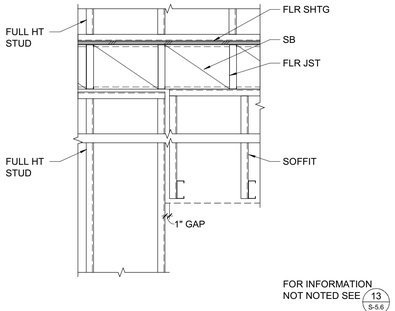

13 SOFFIT WALL TRANSITION
3/4" = 1'-0"

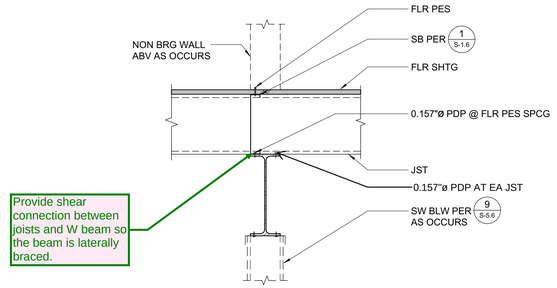

9 FLOOR OVER TOP OF STEEL BEAM
1" = 1'-0"

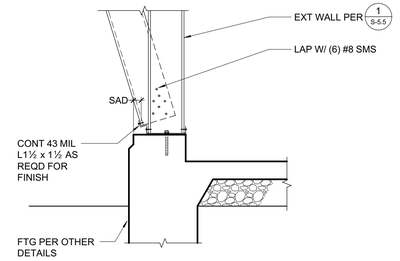

5 BOTTOM OF DOUBLE WALL
3/4" = 1'-0"

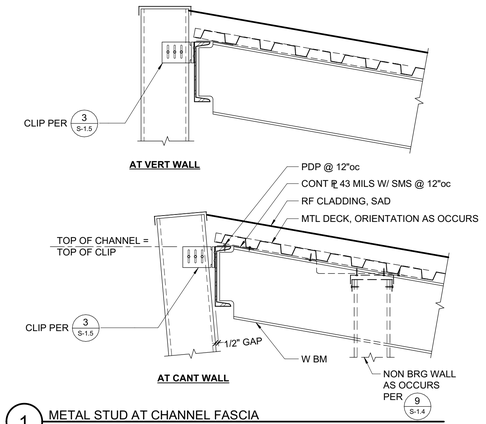

1 METAL STUD AT CHANNEL FASCIA
1" = 1'-0"

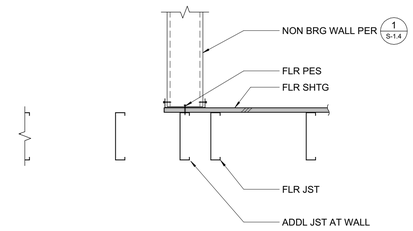

10 WALL ABOVE FRAMING
1" = 1'-0"

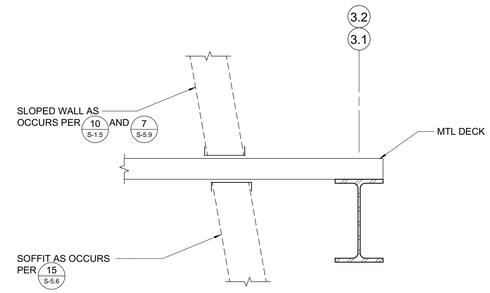

6 WALLS AT LOBBY ROOF
1" = 1'-0"

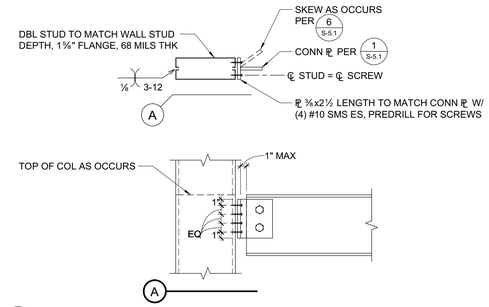

2 STL BM TO BUILT UP STUDS
1" = 1'-0"

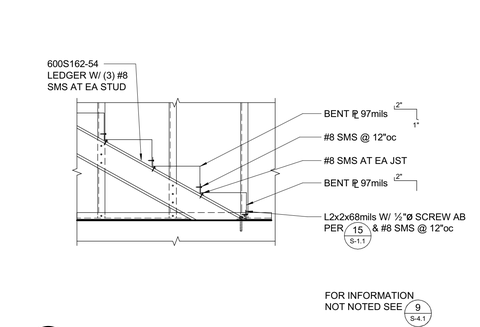

11 METAL STUD STAIRS
3/4" = 1'-0"

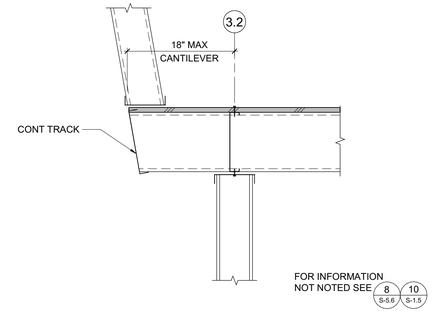

7 FLOORS AT LOBBY
1" = 1'-0"

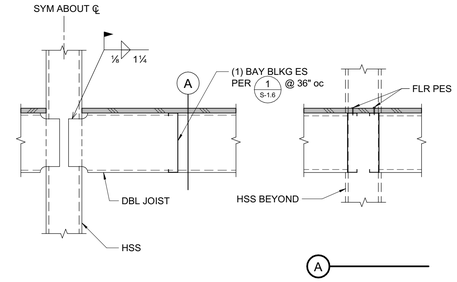

3 JOIST TIES TO HSS
1" = 1'-0"

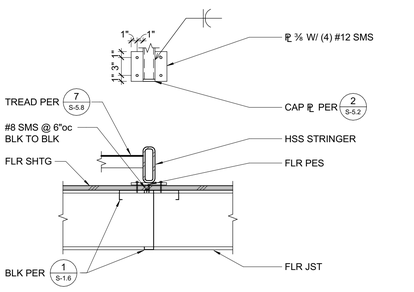

12 TECH LEDGE STRINGER
1" = 1'-0"

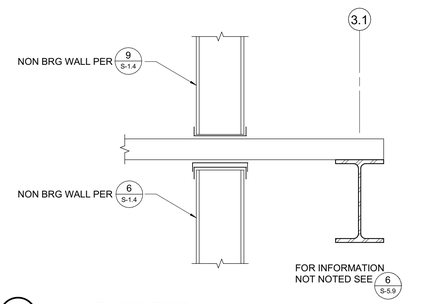

8 WALLS AT LOBBY ROOF
1" = 1'-0"

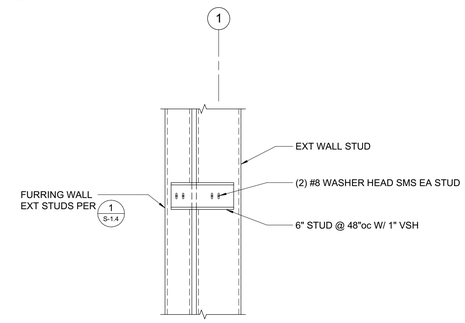

4 NORTH DOUBLE WALL
3/4" = 1'-0"

QUATTROCCHI KWOK ARCHITECTS
Main Office:
636 Fifth Street, Santa Rosa, CA 95404
Pleasanton Office:
600 Main Street, Suite E,
Pleasanton, CA 94566
(707) 576-0829

ZFA STRUCTURAL ENGINEERS
1212 fourth street | suite z **zfa.com**
santa rosa ca 95404 **707.526.0992**
zfa job no. 18254
copyright © 2019



THIS DOCUMENT AND THE IDEAS INCORPORATED HEREIN, AS AN INSTRUMENT OF PROFESSIONAL SERVICE, IS THE PROPERTY OF THE ENGINEER AND IS NOT TO BE USED, IN WHOLE OR IN PART FOR ANY OTHER PROJECT WITHOUT THE PRIOR WRITTEN AUTHORIZATION OF THE ENGINEER.

FREEDOM HIGH SCHOOL

PERFORMING ARTS AND CTE FACILITIES

1050 NEROLY RD
OAKLEY, CA 94561

LIBERTY UNION HIGH SCHOOL DISTRICT

ZFA NO:	18254
ENGR / PM:	NBB / MJR / AIZ
DRAWING SCALE:	As indicated
PTN:	61721-0068

BID SET

AUGUST 13, 2019

SHEET TITLE

COLD FORMED STEEL DETAILS

SHEET NUMBER

S-5.9

C:\revit_local\18254_FREEDOM HS PAC_S18C_mike@zfa.com.rvt
8/5/2019 1:50:43 PM

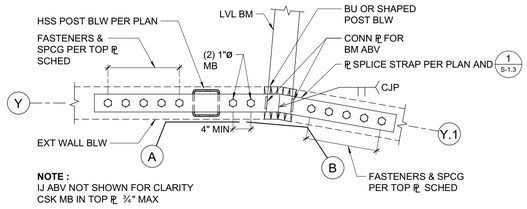

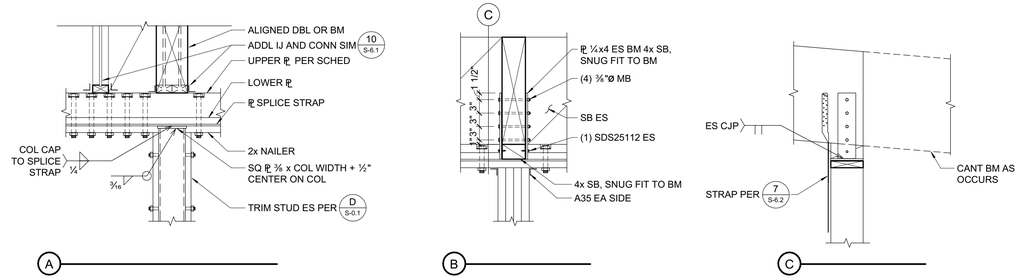

11 CORNER PLATE SPLICE
3/4" = 1'-0"

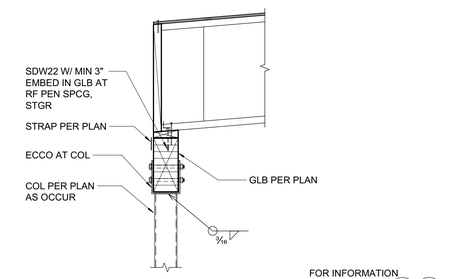

5 IJ BEARING ON BEAM
3/4" = 1'-0"

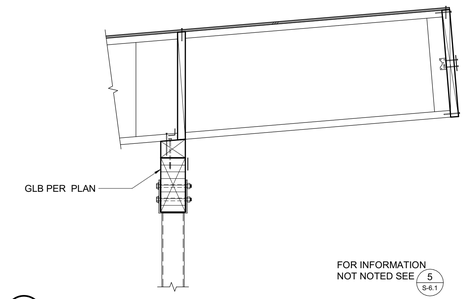

6 CANTILEVER IJ ON BEAM
3/4" = 1'-0"

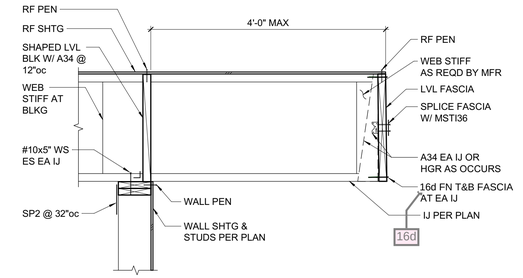

1 CANTILEVER IJ ON BEARING WALL
3/4" = 1'-0"

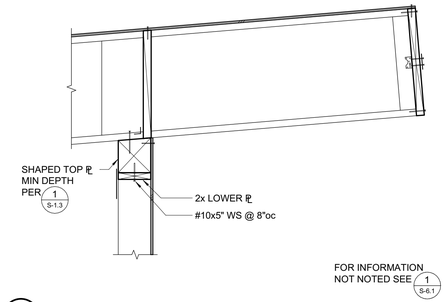

2 TYPICAL CANTILEVER IJ ON BEARING WALL
3/4" = 1'-0"

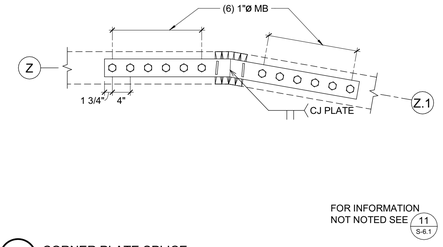

12 CORNER PLATE SPLICE
3/4" = 1'-0"

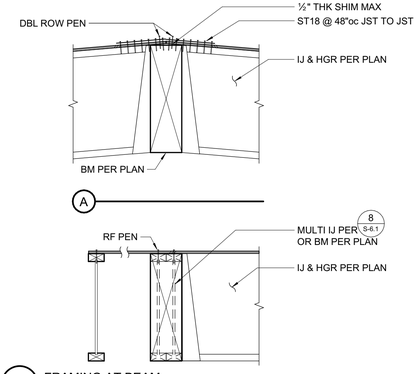

9 FRAMING AT BEAM
3/4" = 1'-0"

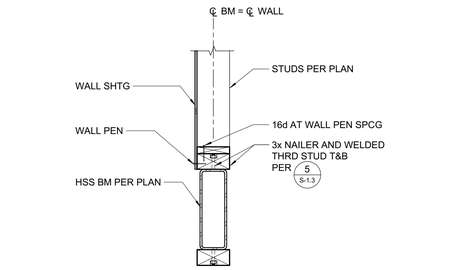

7 WALL ABOVE STEEL BEAM
3/4" = 1'-0"

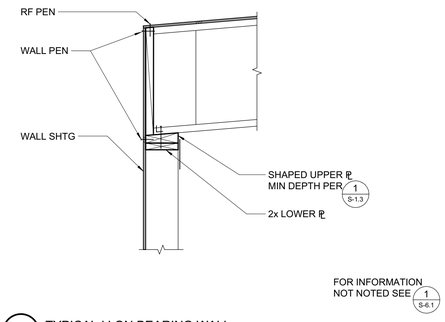

3 TYPICAL IJ ON BEARING WALL
3/4" = 1'-0"

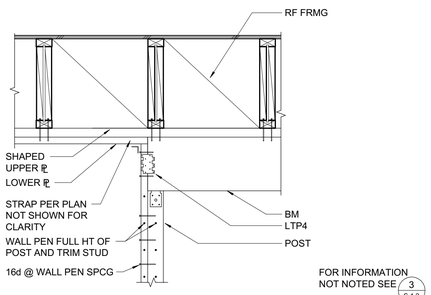

13 BEAM AT WALL END
3/4" = 1'-0"

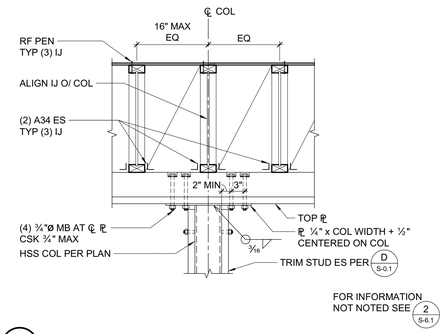

10 HSS COLUMN AT TOP PLATE
3/4" = 1'-0"

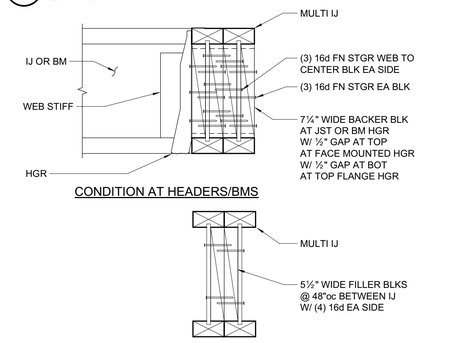

8 MULTI I-JOIST ASSEMBLY
1 1/2" = 1'-0"

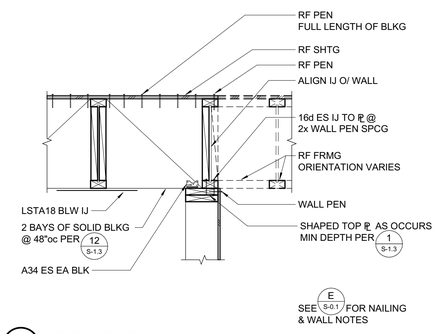

4 IJ PARALLEL TO WALL
3/4" = 1'-0"

C:\revit_local\18254_FREEDOM HS PAC_S18C_nikb@zfa.com.rvt

8/5/2019 1:50:45 PM

QUATTROCCHI KWOK ARCHITECTS
Main Office:
636 Fifth Street, Santa Rosa, CA 95404
Pleasanton Office:
600 Main Street, Suite E,
Pleasanton, CA 94566
(707) 576-0829

ZFA STRUCTURAL ENGINEERS
1212 fourth street | suite z **zfa.com**
santa rosa ca 95404 **707.526.0992**
zfa job no. 18254 **copyright © 2019**



THIS DOCUMENT AND THE IDEAS INCORPORATED HEREIN, AS AN INSTRUMENT OF PROFESSIONAL SERVICE, IS THE PROPERTY OF THE ENGINEER AND IS NOT TO BE USED, IN WHOLE OR IN PART FOR ANY OTHER PROJECT WITHOUT THE PRIOR WRITTEN AUTHORIZATION OF THE ENGINEER.

FREEDOM HIGH SCHOOL

PERFORMING ARTS AND CTE FACILITIES

1050 NEROLY RD
OAKLEY, CA 94561

LIBERTY UNION HIGH SCHOOL DISTRICT

ZFA NO:	18254
ENGR / PM:	NBB / MJR / AIZ
DRAWING SCALE:	As indicated
PTN:	61721-0068

BID SET

AUGUST 13, 2019

SHEET TITLE

WOOD DETAILS

SHEET NUMBER

S-6.1

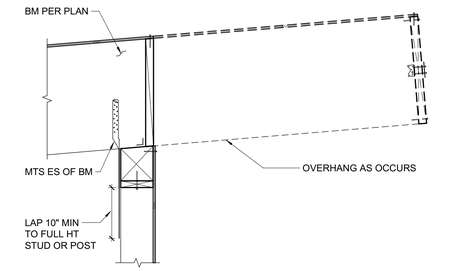

7 VERTICAL STRAP
3/4" = 1'-0"

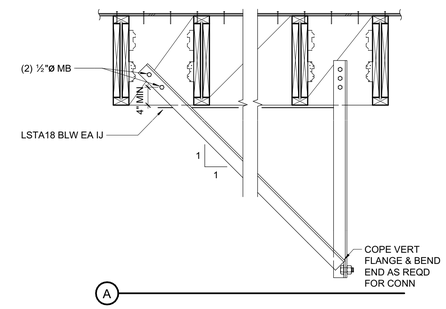

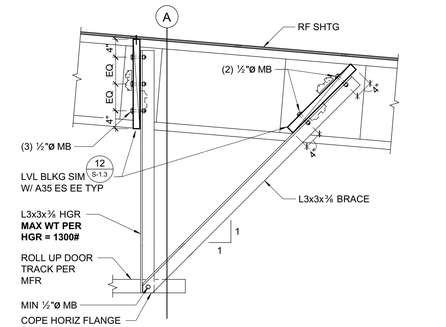

4 ROLL UP DOOR BRACING
3/4" = 1'-0"

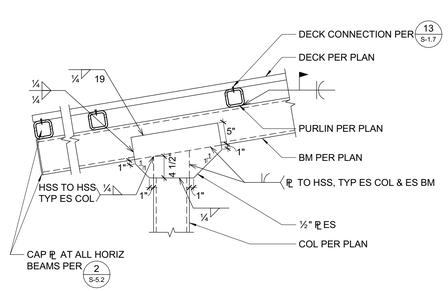

5 LOBBY ENTRY CANOPY FRAMING CONNECTION
3/4" = 1'-0"

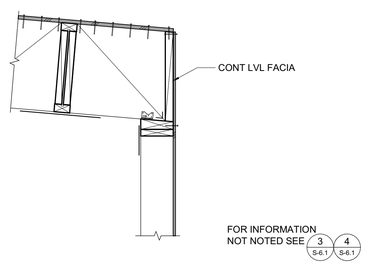

6 IJ PARALLEL TO WALL
3/4" = 1'-0"

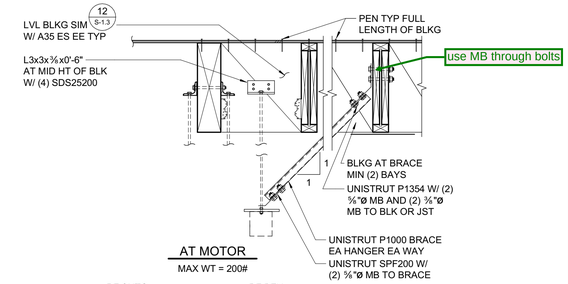

AT MOTOR
MAX WT = 200#

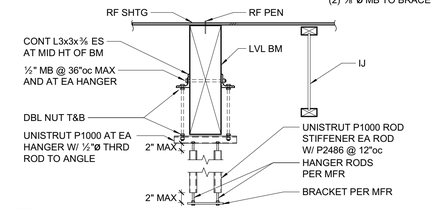

1 PARTITION SUPPORT
3/4" = 1'-0"

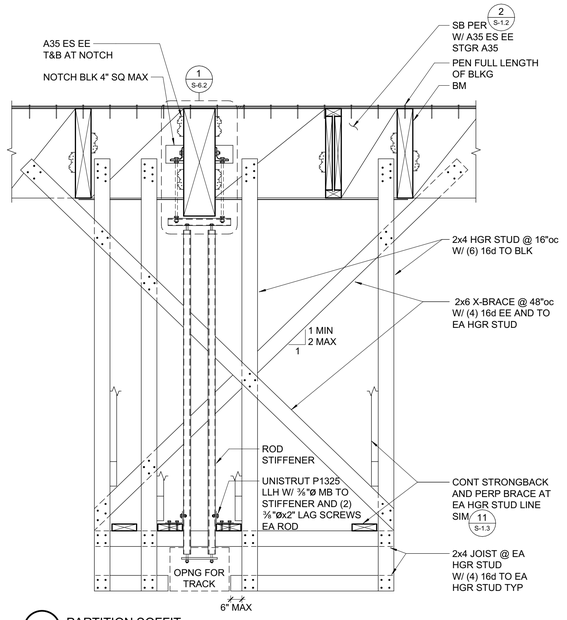

2 PARTITION SOFFIT
3/4" = 1'-0"

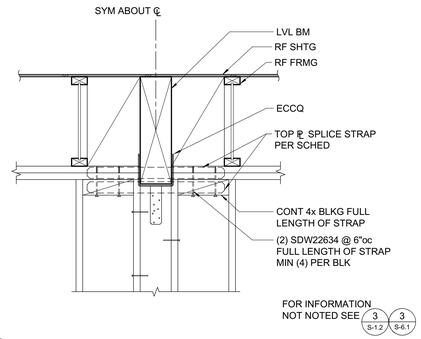

3 BEAM IN STUD WALL
3/4" = 1'-0"

QUATTROCCHI KWOK ARCHITECTS
Main Office:
636 Fifth Street, Santa Rosa, CA 95404
Pleasanton Office:
600 Main Street, Suite E,
Pleasanton, CA 94566
(707) 576-0829

ZFA STRUCTURAL ENGINEERS
1212 fourth street | suite z **zfa.com**
santa rosa ca 95404 **707.526.0992**
zfa job no. 18254

copyright © 2019

REGISTERED PROFESSIONAL ENGINEER
NIS S. WARNER
No. S4813
STRUCTURAL
STATE OF CALIFORNIA

THIS DOCUMENT AND THE IDEAS INCORPORATED HEREIN, AS AN INSTRUMENT OF PROFESSIONAL SERVICE, IS THE PROPERTY OF THE ENGINEER AND IS NOT TO BE USED, IN WHOLE OR IN PART FOR ANY OTHER PROJECT WITHOUT THE PRIOR WRITTEN AUTHORIZATION OF THE ENGINEER.

FREEDOM HIGH SCHOOL

PERFORMING ARTS AND CTE FACILITIES

1050 NEROLY RD
OAKLEY, CA 94561

LIBERTY UNION HIGH SCHOOL DISTRICT

ZFA NO:	18254
ENGR / PM:	NBB / MJR / AIZ
DRAWING SCALE:	3/4" = 1'-0"
PTN:	61721-0068

BID SET

AUGUST 13, 2019

SHEET TITLE

STRUCTURAL DETAILS

SHEET NUMBER

S-6.2

C:\revit_local\18254_FREEDOM HS PAC_S19C_nkb@zfa.com.rvt
8/5/2019 1:50:46 PM

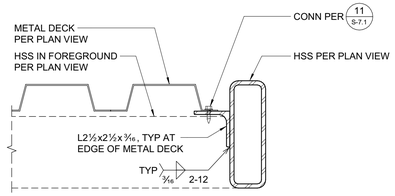

8 RAIN CANOPY RAKE
3" = 1'-0"

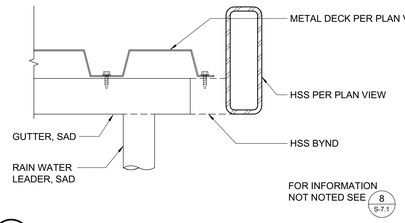

9 RAIN CANOPY AT GUTTER
3" = 1'-0"

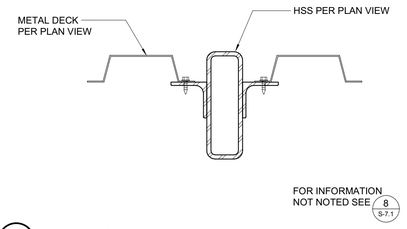

10 RAIN CANOPY CROSS MEMBER
3" = 1'-0"

MARK	STEEL DECK GAGE & PROFILE TYPE SEE 12 S-7.1	DECK CONNECTIONS					
		END/INT BEARING CONN (A)		SIDE BEARING CONN (B)		SIDELAP CONNECTION (C)	
		SIZE & TYPE	PATTERN	SIZE & TYPE	SPACING	SIZE & TYPE	SPACING
1	20 GA	SCREWS	36/7	SCREWS	12"	BP	12"

NOTES:
1. ATTACH DECK TO ALL STEEL SUPPORT FRAMING AS OCCURS.
2. SCREWS = STEEL DECK INSTITUTE (SDI) RECOGNIZED #12 SELF-DRILLING SCREWS, HILTI S-SLC01 M HWH, OR HILTI S-SLC02 M HWH. EXTERIOR-RATED AND W/ INTEGRAL NEOPRENE WASHER AT EXTERIOR CONDITIONS.
3. BP = BUTTON PUNCH.
4. ABOVE REFERENCED DECK IS BASED ON ALLOWABLE DESIGN LOADS PER IAPMO ER-0217 VERCO MANUFACTURING - EQUIVALENT DECK MUST HAVE EQUIVALENT ALLOWABLE VERTICAL LOADS, DIAPHRAGM SHEAR VALUES, AND FLEXIBILITY FACTORS.

11 DECKING SCHEDULE
3/4" = 1'-0"

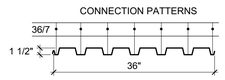

PROPERTIES
F_y=38 KSI

GAGE	I (in⁴/ft)
20 GA	0.216

TYPE "1" DECK
VERCO PLB OR APPROVED EQUAL

12 DECKING TYPE AND CONNECTION PATTERN
3/4" = 1'-0"

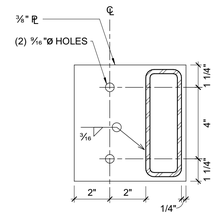

4 CANOPY ATTACHMENT
3" = 1'-0"

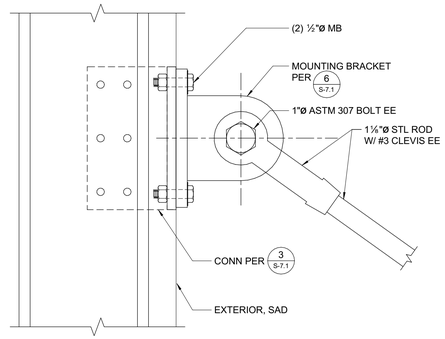

5 DIAGONAL BRACE MOUNTING BRACKET
3" = 1'-0"

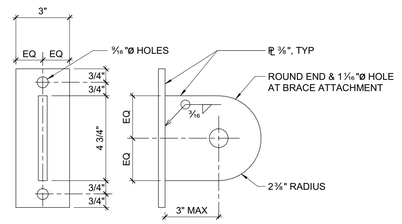

6 DIAGONAL BRACE MOUNTING
3" = 1'-0"

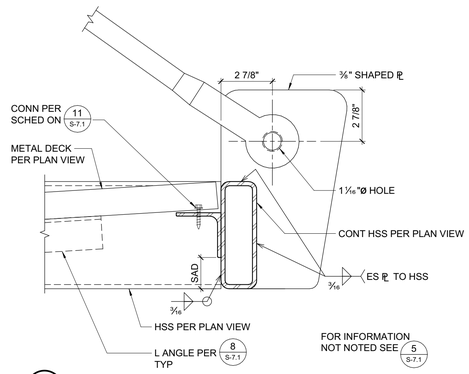

7 RAIN CANOPY HEAD
3" = 1'-0"

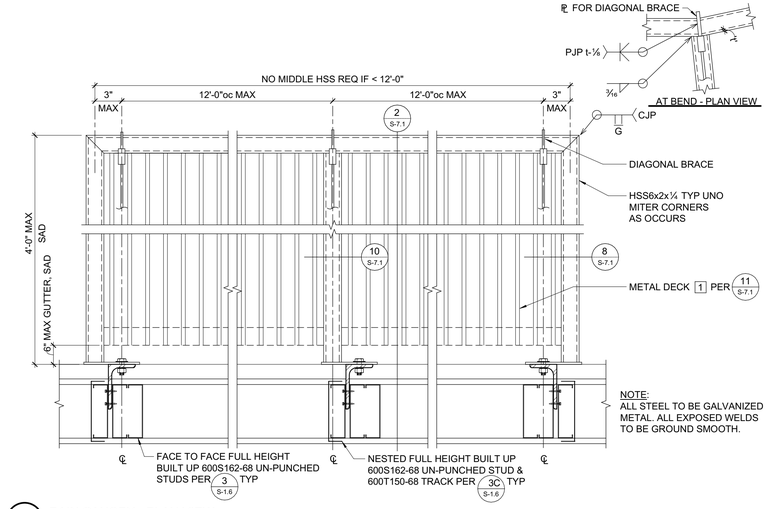

1 RAIN CANOPY - PLAN VIEW
1 1/2" = 1'-0"

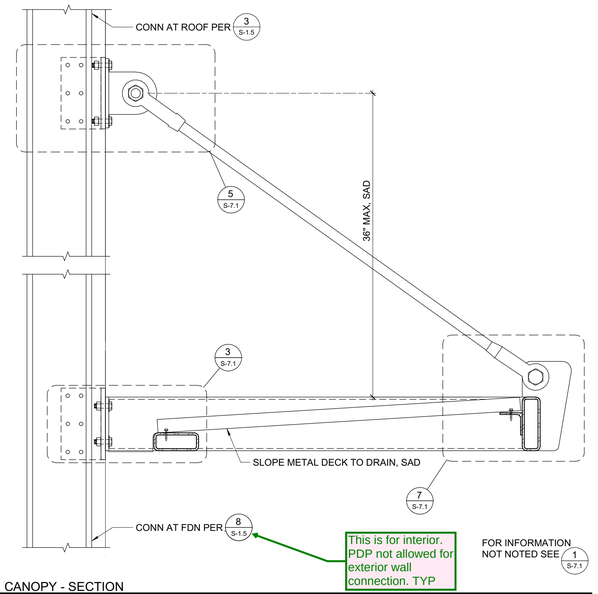

2 RAIN CANOPY - SECTION
1 1/2" = 1'-0"

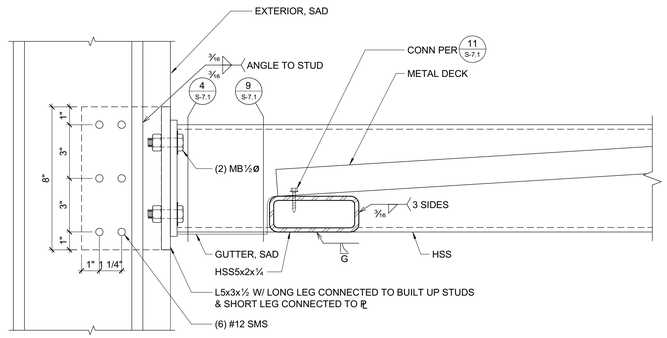

3 RAIN CANOPY LOWER CANOPY ATTACHMENT
3" = 1'-0"

QUATTROCCHI KWOK ARCHITECTS
Main Office:
636 Fifth Street, Santa Rosa, CA 95404
Pleasanton Office:
600 Main Street, Suite E,
Pleasanton, CA 94566
(707) 576-0829

ZFA STRUCTURAL ENGINEERS
1212 fourth street | suite z **zfa.com**
santa rosa ca 95404 **707.526.0992**
zfa job no. 18254

copyright © 2019

LICENSED PROFESSIONAL ENGINEER — LOUIS S. WARNKEN — No. S4813 — STRUCTURAL — STATE OF CALIFORNIA

THIS DOCUMENT AND THE IDEAS INCORPORATED HEREIN, AS AN INSTRUMENT OF PROFESSIONAL SERVICE, IS THE PROPERTY OF THE ENGINEER AND IS NOT TO BE USED, IN WHOLE OR IN PART FOR ANY OTHER PROJECT WITHOUT THE PRIOR WRITTEN AUTHORIZATION OF THE ENGINEER.

FREEDOM HIGH SCHOOL

PERFORMING ARTS AND CTE FACILITIES

1050 NEROLY RD
OAKLEY, CA 94561

LIBERTY UNION HIGH SCHOOL DISTRICT

ZFA NO:	18254
ENGR / PM:	NBB / MJR / AIZ
DRAWING SCALE:	As indicated
PTN:	61721-0068

BID SET

AUGUST 13, 2019

SHEET TITLE

RAIN CANOPY DETAILS

SHEET NUMBER

S-7.1

C:\revit_local\18254_FREEDOM HS PAC_S18C_nkb@zfa.com.rvt
8/5/2019 1:50:49 PM

FREEDOM HIGH SCHOOL

PERFORMING ARTS AND CTE FACILITIES

1050 NEROLY RD, OAKLEY, CA 94561

LIBERTY UNION HIGH SCHOOL DISTRICT

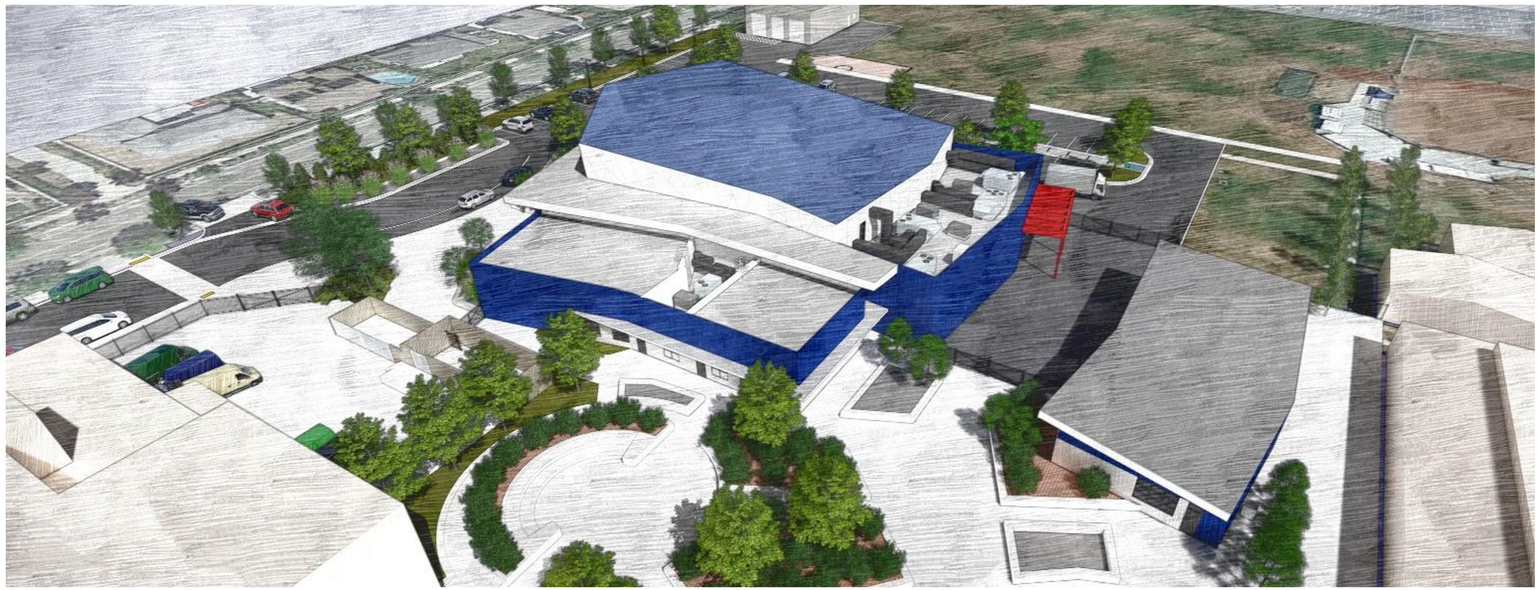

DSA FILE NO 7-H4 **DSA APPLICATION NO: 01-117924** **PTN: 61721-0068**

CONSTRUCTION DOCUMENTS

VOLUME 2 OF 2

PROJECT TEAM

OWNER

Liberty Union School District
20 Oak Street
Brentwood, CA 94513
Phone: 925-634-2166 ext. 2036
Fax: 925-634-1687
Email: evolta@libertyuhsd.k12.ca.us

ARCHITECT

Quattrocchi Kwok Architects
636 Fifth Street
Santa Rosa, CA 95404
Phone: 707-576-0829
Fax: 707-576-0295
Email: jimt@qka.com

CONSTRUCTION MANAGER

Lathrop Construction Associates, Inc.
4001 Park Road
Benicia, CA 94510
Phone: 707-746-8000
Direct: 707-746-4450
Email: anthony.damante@lathropconstruction.com

CIVIL ENGINEER

Carlson Barbee & Gibson, Inc.
2633 Camino Ramon, Suite 350
San Ramon, CA 94583
Phone: 925-866-0322
Email: jvogan@cbandg.com

LANDSCAPE ARCHITECT

GSM Landscape Architects, Inc.
1700 Soscol Ave., Suite 23
Napa, CA 94559
Phone: 707-255-4630
Email: gretchen@gsmlainc.com

STRUCTURAL ENGINEER

ZFA Structural Engineers
1212 Fourth Street, Suite Z
Santa Rosa, CA 95404
Phone: 707-526-0992
Fax: 707-526-0217
Email: andrewz@zfa.com

CATHODIC PROTECTION

Cathodic Protection Consultant
V&A Consulting Engineers
1000 Broadway, Suite 320
Oakland, CA 94607
Phone: (510) 903-6600
Email: cteall@vaengineering.com

MECHANICAL ENGINEER

Costa Engineers
3274 Villa Lane
Napa, CA 94558
Phone: 707-252-9177
Fax: 707-252-6473
Email: cdelcore@costaengineers.com

ELECTRICAL ENGINEER

O'Mahony & Myer (OM&M)
4340 Redwood Highway, Suite 245
San Rafael, CA 94903
Phone: 415-492-0420
Fax: 415-479-6962
Email: pcolenbrander@ommconsulting.com

FIRE PROTECTION

Axiom Engineers
22 Lower Ragsdale Dr., Suite A
Monterery, CA 93940
Phone: 831-649-8000
Email: stever@axiomengineers.com

THEATER CONSULTANT

The Shalleck Collaborative Inc.
1553 Martin Luther King Jr. Way
Berkeley, CA 94709
Phone: 415-956-4100
Email: jedd@shalleck.com

ACOUSTIC ENGINEER

Dohn & Associates, Inc.
630 Quintana Road, #312
Morro Bay, CA 93442
Phone: 805-801-3434
Email: bill.dohn@dohnassoc.com

ENERGY

Guttmann & Blaevoet Consulting Engineers
15 3rd Street
Santa Rosa, CA 95401
707-523-3010 ext. 302
ttiffany@gb-eng.com

QUATTROCCHI KWOK ARCHITECTS
Main Office:
636 Fifth Street, Santa Rosa, CA 95404
Pleasanton Office:
600 Main Street, Suite E,
Pleasanton, CA 94566
(707) 576-0829

LICENSED ARCHITECT
JIM THEISS
LICENSE # C22643
EXP JUNE 30, 2021
STATE OF CALIFORNIA

SIGNED: AUGUST 13, 2019

FREEDOM HIGH SCHOOL

PERFORMING ARTS AND CTE FACILITIES

1050 NEROLY RD,
OAKLEY, CA 94561

LIBERTY UNION HIGH SCHOOL DISTRICT

ARCH PROJECT NO: 1739.00
DRAWN BY:
DRAWING SCALE: N.T.S.
PTN: 61721-0068

BID SET

AUGUST 13, 2019

SHEET TITLE

COVER SHEET - VOLUME 2

SHEET NUMBER

G-0.1

BIM Server: BIMCLOUD-QKA - BIMcloud/1739.00 - Freedom High School/1739.00 FREEDOM HS Performing Arts Center;8/6/2019-5:29 PM

SHEET INDEX

VOLUME 1 OF 2

GENERAL
G-0.1 COVER SHEET VOLUME 1
G-0.2 ABBREVIATIONS AND NOTES
G-0.2,2.1 SHEET INDEX
G-0.3 OVERALL CAMPUS SITE PLAN
G-0.4 FIRE & LIFE SAFETY SITE PLAN
G-0.5 ACCESSIBILITY SITE PLAN
G-0.6 BLDG A CODE ANALYSIS PLAN
G-0.7 BLDG B CODE ANALYSIS PLAN

CIVIL
C-1.0 EXISTING CONDITIONS / DEMOLITION
C-2.0 HORIZONTAL CONTROL PLAN
C-2.1 HORIZONTAL CONTROL PLAN
C-3.0 PAVEMENT/ CURB TYPE PLAN
C-3.1 CURB TYPE DETAILS
C-4.0 UTILITY PLAN
C-4.1 UTILITY PLAN
C-4.2 UTILITY PLAN
C-4.3 UTILITY PLAN
C-4.4 UTILITY PLAN
C-5.0 GRADING AND DRAINAGE PLAN
C-5.1 GRADING AND DRAINAGE PLAN
C-5.2 GRADING AND DRAINAGE PLAN
C-5.3 GRADING AND DRAINAGE PLAN
C-5.4 GRADING AND DRAINAGE PLAN
C-6.0 SIGNING & STRIPING PLAN
C-7.0 PRELIMINARY STORM WATER CONTROL PLAN
C-8.0 EROSION CONTROL PLAN

LANDSCAPE
L1.0 MATERIAL AND DETAIL REFERENCE PLAN
L1.1 CONSTRUCTION DETAILS
L1.2 CONSTRUCTION DETAILS
L1.3 CONSTRUCTION DETAILS
L1.4 CONSTRUCTION DETAILS
L1.5 CONSTRUCTION DETAILS
L1.6 CONSTRUCTION DETAILS
L2.0 LAYOUT PLAN
L3.0 IRRIGATION PLAN
L3.1 IRRIGATION LEGEND
L3.2 IRRIGATION NOTES & DETAILS
L3.3 IRRIGATION DETAILS & SCHEDULES
L3.4 IRRIGATION DETAILS
L3.5 IRRIGATION DETAILS
L3.6 IRRIGATION DETAILS
L3.7 IRRIGATION DETAILS
L4.0 PLANTING PLAN
L4.1 PLANTING DETAILS

ARCHITECTURAL
A-1.1 PARTIAL SITE PLAN

BUILDING A
A-A2.1 BLDG A FIRST FLOOR PLAN
A-A2.2 BLDG A FIRST FLOOR DIMENSION PLAN
A-A2.3 BLDG A CONTROL BOOTH LEVEL FLOOR PLAN
A-A2.4 BLDG A CONTROL BOOTH LEVEL DIMENSION PLAN
A-A2.5 BLDG A TECH LEDGE FLOOR PLAN
A-A2.6 BLDG A TECH LEDGE DIMENSION PLAN
A-A2.7 BLDG A ENLARGED STAIR AND LIFT PLANS
A-A2.8 BLDG A ENLARGED STAIR AND LIFT PLANS
A-A3.1 BLDG A FIRST FLOOR REFLECTED CEILING PLAN
A-A3.2 BLDG A CONTROL BOOTH LEVEL REFLECTED CEILING PLAN
A-A3.3 BLDG A TECH LEDGE REFLECTED CEILING PLAN
A-A4.1 BLDG A LOWER ROOF PLAN
A-A4.2 BLDG A UPPER ROOF PLAN

A-A5.1 BLDG A EXTERIOR ELEVATIONS
A-A5.2 BLDG A EXTERIOR ELEVATIONS
A-A5.3 BLDG A EXTERIOR ELEVATIONS - FINISH LAYOUT
A-A5.4 BLDG A EXTERIOR ELEVATIONS - FINISH LAYOUT

A-A6.1 BLDG A BUILDING SECTIONS
A-A6.2 BLDG A BUILDING SECTIONS
A-A6.3 BLDG A BUILDING SECTIONS
A-A6.10 BLDG A WALL SECTIONS
A-A6.11 BLDG A WALL SECTIONS
A-A6.12 BLDG A WALL SECTIONS
A-A6.13 BLDG A WALL SECTIONS
A-A6.14 BLDG A WALL SECTIONS
A-A6.15 BLDG A WALL SECTIONS
A-A6.16 BLDG A WALL SECTIONS
A-A6.17 BLDG A WALL SECTIONS
A-A6.18 BLDG A WALL SECTIONS
A-A6.19 BLDG A WALL SECTIONS
A-A6.20 BLDG A WALL SECTIONS

A-A7.1 BLDG A INTERIOR ELEVATIONS
A-A7.2 BLDG A INTERIOR ELEVATIONS
A-A7.3 BLDG A INTERIOR ELEVATIONS
A-A7.4 BLDG A INTERIOR ELEVATIONS
A-A7.5 BLDG A INTERIOR ELEVATIONS
A-A7.6 BLDG A INTERIOR ELEVATIONS
A-A7.7 BLDG A INTERIOR ELEVATIONS
A-A7.8 BLDG A INTERIOR ELEVATIONS
A-A7.9 BLDG A INTERIOR ELEVATIONS
A-A7.10 BLDG A INTERIOR ELEVATIONS - WALL PANELS
A-A7.11 BLDG A INTERIOR ELEVATIONS - WALL PANELS
A-A7.12 BLDG A INTERIOR ELEVATIONS
A-A7.13 BLDG A INTERIOR ELEVATIONS
A-A7.14 BLDG A INTERIOR ELEVATIONS
A-A7.15 BLDG A INTERIOR ELEVATIONS
A-A7.16 BLDG A INTERIOR ELEVATIONS
A-A7.17 BLDG A INTERIOR ELEVATIONS
A-A7.18 BLDG A INTERIOR ELEVATIONS

BUILDING B
A-B2.1 BLDG B FLOOR PLAN
A-B3.1 BLDG B REFLECTED CEILING PLAN
A-B4.1 BLDG B ROOF PLAN
A-B5.1 BLDG B EXTERIOR ELEVATIONS
A-B6.1 BLDG B BUILDING SECTIONS
A-B6.10 BLDG B WALL SECTIONS
A-B6.11 BLDG B WALL SECTIONS
A-B7.1 BLDG B INTERIOR ELEVATIONS
A-B7.2 BLDG B INTERIOR ELEVATIONS

ARCHITECTURAL CONTINUED...
A-8.1 DOOR SCHEDULE
A-8.2 WINDOW SCHEDULE
A-8.3 WINDOW SCHEDULE

A-9.1 WALL DETAILS - METAL FRAMING
A-9.2 WALL DETAILS - METAL FRAMING
A-9.3 WALL DETAILS - WOOD FRAMING
A-9.4 GENERAL WALL DETAILS
A-9.5 OPENING DETAILS - METAL FRAMING
A-9.6 OPENING DETAILS - METAL FRAMING
A-9.7 OPENING DETAILS - WOOD FRAMING
A-9.8 METAL ROOFING DETAILS
A-9.9 METAL ROOFING DETAILS
A-9.10 METAL ROOFING DETAILS - UNCONDITIONED
A-9.11 MODIFIED BITUMEN ROOFING - METAL FRAMING
A-9.12 MODIFIED BITUMEN ROOFING - METAL FRAMING
A-9.13 MODIFIED BITUMEN ROOFING - WOOD FRAMING
A-9.14 GUTTER AND RWL DETAILS
A-9.15 ROOF HATCHES AND ACCESS LADDERS
A-9.16 RAIN CANOPY & ENTRY CANOPY DETAILS
A-9.17 STAIR & ACC LIFT DETAILS

A-10.1 INTERIOR DETAILS - METAL FRAMING
A-10.2 INTERIOR DETAILS - METAL FRAMING
A-10.3 INTERIOR DETAILS - WOOD FRAMING
A-10.4 CEILING DETAILS
A-10.5 CEILING DETAILS
A-10.6 CASEWORK DETAILS
A-10.7 CASEWORK DETAILS
A-10.8 THEATER DETAILS
A-10.9 SIGNAGE DETAILS

ARCHITECTURAL GRAPHICS
AG-A2.1 BLDG A FIRST FLOOR GRAPHICS PLAN
AG-A2.2 BLDG A CONTROL RM GRAPHICS PLAN
AG-A2.3 BLDG A TECH LEDGE GRAPHICS PLAN
AG-B2.1 BLDG B FIRST FLOOR GRAPHICS PLAN

STRUCTURAL
S-0.1 GENERAL NOTES
S-0.2 GENERAL NOTES & TYPICAL CONCRETE DETAIL
S-1.1 TYPICAL CONCRETE DETAILS
S-1.2 TYPICAL WOOD DETAILS
S-1.3 TYPICAL WOOD DETAILS
S-1.4 TYPICAL METAL STUD ELEV & CONNECTION DETAILS
S-1.5 TYPICAL METAL STUD CONNECTION DETAILS
S-1.6 TYPICAL METAL STUD SOFFIT & MISCELLANEOUS DETAILS
S-1.7 TYPICAL METAL DECKING DETAILS
S-A2.1 BLDG A FOUNDATION PLAN
S-A2.2 BLDG A CONTROL ROOM FRAMING PLAN
S-A2.3 BLDG A TECH LEDGE/CATWALK AND LOW ROOF FRAMING PLAN
S-A2.4 BLDG A LOBBY ROOF FRAMING PLAN
S-A2.5 BLDG A ROOF FRAMING PLAN
S-A3.1 BLDG A FRAME ELEVATIONS
S-A3.2 BLDG A FRAME ELEVATIONS
S-A3.3 TRUSS ELEVATION AND DETAILS
S-B2.1 BLDG B FOUNDATION
S-B2.2 BLDG B ROOF FRAMING PLAN
S-4.1 FOUNDATION DETAILS
S-4.2 FOUNDATION DETAILS
S-4.3 FOUNDATION DETAILS
S-5.1 STEEL FRAMING DETAILS
S-5.2 STEEL FRAMING DETAILS
S-5.3 STEEL BRACED FRAME DETAILS
S-5.4 STEEL BRACED FRAME & FRAMING DETAILS
S-5.5 BEARING COLD FORMED STEEL AND STEEL DETAILS
S-5.6 COLD FORMED STEEL DETAILS
S-5.7 CATWALK AND PROSCENIUM DETAILS
S-5.8 STEEL STAIR DETAILS
S-5.9 COLD FORMED STEEL DETAILS
S-6.1 WOOD DETAILS
S-6.2 STRUCTURAL DETAILS
S-7.1 RAIN CANOPY DETAILS

VOLUME 2 OF 2

GENERAL
G-0.1 COVER SHEET VOLUME 2
G-0.2.2 SHEET INDEX

MECHANICAL
M1.1 MECHANICAL SCHEDULES & LEGEND
M1.2 MECHANICAL SCHEDULES
M-A2.1 MECHANICAL FLOOR PLAN
M-A2.2 MECHANICAL CONTROL ROOM LEVEL
M-A2.3 MECHANICAL TECH LEDGE LEVEL
M-3.1 MECHANICAL PIPING PLAN
M-3.2 MECHANICAL PIPING CONTROL ROOM LEVEL
M-3.3 MECHANICAL PIPING TECH LEDGE LEVEL
M-B2.1 CTE BUILDING MECHANICAL PLAN
M-4.1 MECHANICAL DETAILS
M-4.2 MECHANICAL DETAILS
M-4.3 MECHANICAL DETAILS
M-4.4 MECHANICAL DETAILS
M-5.1 MECHANICAL CONTROLS
M-5.2 MECHANICAL CONTROLS
M-5.3 MECHANICAL CONTROLS
M-5.4 MECHANICAL CONTROLS
M-5.5 MECHANICAL CONTROLS
M-5.6 OPM-0043-13 REFERENCE

PD1.0 GAS DEMOLITION SITE PLAN
P1.1 PLUMBING SCHEDULES & LEGENDS
P-A2.1 PLUMBING FLOOR PLAN
P-A2.2 PLUMBING CONTROL ROOM FLOOR PLAN
P-A2.3 PLUMBING TECH LEDGE LEVEL
P-A3.1 PLUMBING WASTE & VENT ENLARGED PLANS
P-A3.2 PLUMBING WATER & GAS ENLARGED PLANS
P-B2.1 CTE BUILDING WASTE & VENT FLOOR PLAN
P-B2.2 CTE BUILDING WATER & GAS FLOOR PLAN
P-4.1 PLUMBING DETAILS
P-4.2 PLUMBING DETAILS
P-4.3 PLUMBING DETAILS

ELECTRICAL
E-0.1 SYMBOLS LIST, GENERAL NOTES & LIST OF DRAWINGS
E-0.2 LUMINAIRE SCHEDULE
E-0.3 LUMINAIRE SCHEDULE
E-1.0 OVERALL SITE PLAN POWER & SIGNAL
E-1.1 SITE PLAN POWER & SIGNAL
E-1.2 SITE PLAN LIGHTING
E-A2.1 BUILDING A FIRST FLOOR PLAN - LIGHTING- PAC
E-A2.2 BUILDING A CONTROL BOOTH LEVEL PLAN - LIGHTING- PAC
E-A2.3 BUILDING A TECH LEDGE FLOOR PLAN - LIGHTING- PAC
E-B2.1 BUILDING B FIRST FLOOR PLAN - LIGHTING- CTE
E-PL-1.01 PRODUCTION LIGHTING PLAN AT LEVEL 1 - ELECTRICAL
E-PL-1.02 PRODUCTION LIGHTING PLAN AT LEVEL 2 - ELECTRICAL
E-PL-1.03 PRODUCTION LIGHTING PLAN AT LEVEL 3 - ELECTRICAL
E-PL-5.01 PRODUCTION LIGHTING SINGLE LINE DIAGRAM - ELECTRICAL

E-PS-1.01 PRODUCTION SEATING PLAN AT LEVEL 1 - ELECTRICAL

E-A3.1 BUILDING A FIRST FLOOR PLAN - POWER & SIGNAL PAC
E-A3.2 BUILDING A CONTROL BOOTH LEVEL PLAN - POWER &SIGNALPAC
E-A3.3 BUILDING A TECH LEDGE FLOOR PLAN - POWER & SIGNAL PAC
E-B3.1 BUILDING B FIRST FLOOR PLAN - POWER & SIGNAL CTE
E-4.1 FIRST FLOOR PARTIAL PLANS - ELECTRICAL
E-5.1 SINGLE LINE DIAGRAM - POWER
E-5.2 SINGLE LINE DIAGRAM - SIGNAL
E-5.3 SINGLE LINE DIAGRAMS - POWER
E-5.4 HOUSE LIGHTING CONTROLS
E-5.5 LIGHTING CONTROL DIAGRAMS
E-6.1 PANEL SCHEDULES
E-6.2 PANEL SCHEDULES
E-6.3 PANEL SCHEDULES
E-7.1 DETAILS
E-7.2 DETAILS
E-7.3 DETAILS
E-7.4 DETAILS
E-7.5 DETAILS
E-7.6 DETAILS
E-7.7 DETAILS

FE0.1 FIRE ALARM NOTES, DETAILS & COMPONENTS LIST
FE1.1 SITE PLAN - FIRE ALARM
FE-A3.1 BUILDING A FIRST FLOOR PLAN - FIRE ALARM PAC
FE-A3.2 BUILDING A CONTROL BOOTH LEVEL PLAN - FIRE ALARM PAC
FE-A3.3 BUILDING A TECH LEDGE FLOOR PLAN - FIRE ALARM PAC
FE-B3.1 BUILDING B FIRST FLOOR PLAN - FIRE ALARM
FE5.1 RISER DIAGRAM - FIRE ALARM - CTE
FE6.1 CALCULATIONS - FIRE ALARM

THEATRE
PL-1.01 PRODUCTION LIGHTING LEVEL 1 DEVICE PLANS
PL-1.03 PRODUCTION LIGHTING LEVEL 3 DEVICE PLANS
PL-3.01 PRODUCTION LIGHTING SINGLE LINE DIAGRAM
PL-3.02 PRODUCTION LIGHTING DEVICE SCHEDULE
PL-5.01 PRODUCTION LIGHTING DEVICE DETAILS
PL-5.02 PRODUCTION LIGHTING MOUNTING DETAILS
PL-5.03 PRODUCTION LIGHTING PANEL MOUNTINGS
PL-5.04 PRODUCTION LIGHTING CONTROL EQUIPMENT RACK PLATES

PR-1.01 PRODUCTION RIGGING - LEVEL 1 PLAN
PR-1.02 PRODUCTION RIGGING - LEVEL 2 PLAN
PR-1.03 PRODUCTION RIGGING - LEVEL 3 PLAN
PR-3.01 PRODUCTION RIGGING CENTERLINE SECTION
PR-3.02 PRODUCTION RIGGING FOH SECTIONS
PR-3.03 PRODUCTION RIGGING STAGE SECTION
PR-3.04 PRODUCTION RIGGING PROSCENIUM ELEVATION
PR-4.01 PRODUCTION RIGGING PIT FILLER
PR-5.01 PRODUCTION RIGGING TENSION GRID DETAIL
PR-5.02 PRODUCTION RIGGING MOUNTING DETAILS
PR-5.03 PRODUCTION RIGGING MOUNTING DETAILS
PR-5.04 PRODUCTION RIGGING MOUNTING DETAILS
PR-5.05 PRODUCTION RIGGING LOOSE PIPE DETAIL
PR-5.06 PRODUCTION RIGGING RISER DIAGRAMS
PR-5.07 PRODUCTION RIGGING DETAILS
PR-5.08 PRODUCTION RIGGING SIGNAGE

PS-1.01 PRODUCTION SEATING - LEVEL 1 PLAN
PS-3.01 PRODUCTION SEATING CL SECTION & DTLS

AV-0.01 AV ISOLATED GROUND, CONDUIT, & ALS INFO
AV-0.02 AV WIRETYPE SCHEDULE
AV-0.03 AV DEVICE SCHEDULE
AV-1.01 AV DEVICE PLAN AT LEVEL 1
AV-1.01b AV DEVICE PLAN AT LEVEL 1
AV-1.02 AV DEVICE PLAN AT LEVEL 2
AV-1.03 AV DEVICE PLAN AT LEVEL 3
AV-2.01 AV DEVICE RCP AT LEVEL 1
AV-2.02 AV DEVICE RCP AT LEVEL 2
AV-3.01 AUDIO PLAN & SECTION AT THEATRE
AV-3.51 VIDEO PLAN & SECTION AT THEATRE
AV-4.01 AV ENLARGED PLANS
AV-5.01 WIRE AND CONDUIT RISER DIAGRAMS
AV-5.10 AUDIO BLOCK DIAGRAM AT THEATRE
AV-5.11 VIDEO BLOCK DIAGRAM AT THEATRE
AV-5.12 PROGRAM/ PAGING BLOCK DIAGRAM AT THEATRE
AV-5.13 CONTROL BLOCK DIAGRAM AT THEATRE
AV-5.20 AV BLOCK DIAGRAM AT CHORAL
AV-5.21 AV BLOCK DIAGRAM AT CLASS

THEATRE CONT.
AV-7.01 AV PANEL ELEVATIONS
AV-7.02 AV PANEL ELEVATIONS
AV-7.03 AV PANEL ELEVATIONS
AV-7.10 AV MOUNTING DETAILS
AV-7.11 AV MOUNTING DETAILS
AV-7.12 AV MOUNTING DETAILS
AV-7.13 AV MOUNTING DETAILS
AV-7.14 AV MOUNTING DETAILS

FIRE PROTECTION
FP0.1 LEGEND, NOTES, AND DETAILS - FIRE PROTECTION
FP1.1 SITE PLAN - FIRE PROTECTION
FP-A2.1 FIRST FLOOR PIPING PLAN - FIRE PROTECTION
FP-A2.2 CONTROL BOOTH PIPING PLAN - FIRE PROTECTION
FP-A2.3 TECH LEDGE PIPING PLAN - FIRE PROTECTION
FP-A3.1 FIRST FLOOR CEILING PLAN - FIRE PROTECTION
FP-A3.2 CONTROL BOOTH CEILING PLAN - FIRE PROTECTION
FP-A3.3 TECH LEDGE CEILING PLAN - FIRE PROTECTION
FP-A4.1 SECTIONS - FIRE PROTECTION
FP-A4.2 SECTIONS - FIRE PROTECTION
FP-B2.1 CTE BUILDING PIPING PLAN - FIRE PROTECTION
FP-B3.1 CTE BUILDING CEILING PLAN - FIRE PROTECTION
FP-B4.1 SECTIONS - FIRE PROTECTION
FP-6.1 DETAILS - FIRE PROTECTION
FP-6.2 DETAILS - FIRE PROTECTION
FP-6.3 DETAILS - FIRE PROTECTION
FP-6.4 DETAIL AND SEISMIC BRACING CALCULATIONS - FIRE PROTECTION

CATHODIC PROTECTION
CP-1.2 CP DETAILS
CP-1.3 CP DETAILS

TITLE 24 COMPLIANCE DOCUMENTATION
T-1 TITLE 24 BLDG A
T-2 TITLE 24 BLDG A
T-3 TITLE 24 BLDG A
T-4 TITLE 24 BLDG A
T-5 TITLE 24 BLDG A
T-6 TITLE 24 BLDG A
T-7 TITLE 24 BLDG A
T-8 TITLE 24 BLDG A
T-9 TITLE 24 BLDG A
T-10 TITLE 24 BLDG A
T-11 TITLE 24 BLDG A & B
T-12 TITLE 24 BLDG B
T-13 TITLE 24 BLDG B
T-14 TITLE 24 BLDG B

TOTAL NUMBER SHEETS = 332

QUATTROCCHI KWOK ARCHITECTS
Main Office:
636 Fifth Street, Santa Rosa, CA 95404
Pleasanton Office:
600 Main Street, Suite E,
Pleasanton, CA 94566
(707) 576-0829

LICENSED ARCHITECT
JIM THEISS
LICENSE # C22643
EXP. JUNE 30, 2021
STATE OF CALIFORNIA

SIGNED: AUGUST 13, 2019

FREEDOM HIGH SCHOOL

PERFORMING ARTS AND CTE FACILITIES

1050 NEROLY RD,
OAKLEY, CA 94561

LIBERTY UNION HIGH SCHOOL DISTRICT

ARCH PROJECT NO: 1739.00
DRAWN BY:
DRAWING SCALE: N.T.S.
PTN: 61721-0068

BID SET

AUGUST 13, 2019

SHEET TITLE

SHEET INDEX

SHEET NUMBER

G-0.2.2

BIM Server: BIMCLOUD-QKA - BIMcloud/1739.00 - Freedom High School/1739.00 FREEDOM HS Performing Arts Center:8/6/2019 7:53 PM

EXHAUST FAN SCHEDULE

MARK	MFR	MODEL NO	AIRFLOW	FAN RPM	INLET SONES	ELECTRICAL DATA				WEIGHT	SERVICE	REMARKS
						MOTOR HP	OPER. HP	WATTS	V-Ø-Hz			
EF-1	GREENHECK	SP-A510-VG	450 CFM	1117	6			155 W	120-1-60	37.00 lbf	MENS RR 104	2
EF-2	GREENHECK	SP-A510-VG	450 CFM	1117	6			155 W	120-1-60	37.00 lbf	WOMENS RR 106	2
EF-3	PANASONIC	FV-0511VK2	110 CFM	1182	0.3			6 W	120-1-60	11.80 lbf	GIRLS W/R 134	1
EF-4	PANASONIC	FV-0511VK2	110 CFM	1182	0.3			6 W	120-1-60	11.80 lbf	BOYS W/R 136	1
EF-5	PANASONIC	FV-0511VK2	110 CFM	1182	0.3			6 W	120-1-60	11.80 lbf	STAFF W/R 137	1
EF-6	PANASONIC	FV-0511VK2	110 CFM	1182	0.3			6 W	120-1-60	11.80 lbf	CUSTODIAL 138	1
EF-7	GREENHECK	G 080-VG	250 CFM	1252		1/10	0.03		120-1-60	46.00 lbf	PAINT STORAGE	3

REMARKS: 1. PROVIDE WITH MANUFACTURES MOTION SENSOR, SPEED CONTROLLER, AND TIME DELAY MODULE
2. INTERLOCK WITH BUILDING LIGHTING CONTROL
3. PROVIDE WITH MANUAL ON/OFF CONTROL SWITCH AND MONITORED BY BUILDING EMS

HEAT PUMP UNIT

MARK	MFR.	MODEL NO.	UNIT CAPACITIES (MBH)		EER	ELECTRICAL DATA			WEIGHT	SERVICE	REMARKS
			HEATING	COOLING		V-Ø-HZ	MCA	MOCP			
HP-1	DAIKIN	RXYQ120TAYDU	129.0	120.0	12	460-3-60	20.6	25	556	FC-1,3,4,5,7	1
HP-6	DAIKIN	RXTQ48TAVJU	49.5	45.5	10.3	208-1-60	29.1	35	176	FC-6	1

REMARKS: 1. REFRIGERANT R-410A

SPLIT SYSTEM INDOOR UNIT

MARK	MFR	MODEL	AIRFLOW	ELECTRICAL DATA			FILTER	WEIGHT	SERVICE	REMARKS
				V-Ø-HZ	MCA	MOCP				
FC-1	DAIKIN	FXAQ18PVJU	500 CFM	208-1-60	0.5	15	WASHABLE	31 lb	CONTROL ROOM	
FC-3	DAIKIN	FXAQ24PVJU	635 CFM	208-1-60	0.6	15	WASHABLE	31 lb	AMP ROOM	
FC-4	DAIKIN	FXHQ36MVJU	830 CFM	208-1-60	1.4	15	WASHABLE	90 lb	ELECTRICAL	
FC-5	DAIKIN	FXHQ36MVJU	830 CFM	208-1-60	1.4	15	WASHABLE	90 lb	IDF	
FC-6	DAIKIN	FXAQ24PVJU	635 CFM	208-1-60	0.6	15	WASHABLE	31 lb	CONSESSIONS	
FC-7	DAIKIN	FXAQ09PVJU	280 CFM	208-1-60	0.4	15	WASHABLE	26 lb	DIMMER	

UNIT HEATER SCHEDULE

MARK	MFR	MODEL NO	AIRFLOW	GAS INPUT MBH	ELECTRICAL DATA					WEIGHT	SERVICE	REMARKS
					MOTOR HP	WATTS	V-Ø-HZ	MCA	MOCP			
UH-1	REZNOR	UDAP 60	769 CFM	60	.06	155 W	120-1-60	2.4	15	74.00 lb	SHOP	
UH-2	REZNOR	UDAP 60	769 CFM	60	.06	155 W	120-1-60	2.4	15	74.00 lb	SHOP	

DUST COLLECTOR SCHEDULE

MARK	MFR	MODEL NO	AIRFLOW	FAN RPM	ESP	MOTOR HP	WATTS	V-Ø-Hz	WEIGHT	SERVICE	REMARKS
DC-1	AGET DUSTKOP	30SN90-D1-SP	2212 CFM	3450	9.00 in-wg	7.5		208-3-60	700.00 lbf	SHOP	1, 2

REMARKS: 1. PROVIDE WITH DISCHARGE SOUND ATTENUATOR.
2. PROVIDE WITH 55 GAL STEEL DRUM FOR DUST STORAGE.

FURNACE UNIT SCHEDULE

MARK	MFR	MODEL NO	AIRFLOW	ESP	CEI TOTAL COOLING	CEI SENSIBLE COOLING	COOLING COIL MODEL#	GAS HTG STAGE 1 INPUT/OUT PUT (MBH)	GAS HTG STAGE 2 INPUT/OUT PUT (MBH)	V-Ø-HZ	MCA	MOCP	WEIGHT	SERVICE	REMARKS
F-1	CARRIER	59TP6A080E21--20	1600 CFM	0.50 in-wg	48.6 Btu/h	35.8 Btu/h	CNPV4821ALA	52/51	80/78	115-1-60	14.7	20	222.00 lb	CTE CR	1,2,3

REMARKS: 1. PROVIDE WITH CONDENSATE NEUTRALIZATION KIT CONCENTRIC VENT KIT.
2. PROVIDE WITH 2" MERV13 FILTER AND FILTER RACK AT BOTTOM OF FURNACE.
3. PROVIDE WITH WIRED THERMOSTAT AND CO2 SENSOR FOR DEMAND CONTROL VENTILATION. SEE DETAIL A/M5.3

CONDENSING UNIT SCHEDULE

MARK	MFR.	MODEL NO.	COOLING CAP.	EER	ELECTRICAL DATA			WEIGHT	SERVICE	REMARKS
					V-Ø-HZ	MCA	MOCP			
CU-1	CARRIER	24ANB748A003	48000.0	13	208-1-60	27.8	40	352	F-1	1

REMARKS: 1. REFRIGERANT R-410A

DUCT SILENCER SCHEDULE

MANUF: IAC

MARK	MODEL NO	DUTY	POSITION	AIRFLOW	WxHxL	SOUND POWER (db) INLET/DISCHARGE/RADIATED							
						63 HZ	125 HZ	250 HZ	500 HZ	1 HZ	2 KHZ	4 KHZ	8 KHZ
ST 1.1	5ELB-LFM	SUPPLY	ELBOW - HORIZONTAL	5000 CFM	36X36X60	7	11	21	36	38	26	18	14
ST 5.1	5ELB-LFM	RETURN	ELBOW - HORIZONTAL	2400 CFM	36X24X60	7	11	21	36	38	26	18	14
ST 6.1	5ELB-LFM	RETURN	ELBOW - HORIZONTAL	1600 CFM	24X18X60	7	11	21	36	38	26	18	14
ST 6.2	5ELB-LFM	SUPPLY	ELBOW - HORIZONTAL	1600 CFM	24X18X60	7	11	21	36	38	26	18	14

LIST OF APPLICABLE CODES AND STANDARDS:

TITLE 24, PART 2: 2016 CALIFORNIA BUILDING CODE (VOLUMES 1 & 2)
TITLE 24, PART 3: 2016 CALIFORNIA ELECTRICAL CODE
TITLE 24, PART 4: 2016 CALIFORNIA MECHANICAL CODE
TITLE 24, PART 5: 2016 CALIFORNIA PLUMBING CODE
TITLE 24, PART 6: 2016 CALIFORNIA ENERGY CODE
TITLE 24, PART 9: 2016 CALIFORNIA FIRE CODE
TITLE 24, PART 12: 2016 CALIFORNIA REFERENCED STANDARDS CODE

MEP COMPONENT ANCHORAGE NOTE:

ALL MECHANICAL, PLUMBING, AND ELECTRICAL COMPONENTS SHALL BE ANCHORED AND INSTALLED PER THE DETAILS ON THE DSA APPROVED CONSTRUCTION DOCUMENTS. WHERE NO DETAIL IS INDICATED, THE FOLLOWING COMPONENTS SHALL BE ANCHORED OR BRACED TO MEET THE FORCE AND DISPLACEMENT REQUIREMENTS PRESCRIBED IN THE 2016 CBC, SECTIONS 1616A.1.18 THROUGH 1616A.1.26 AND ASCE 7-10 CHAPTER 13, 26, AND 30.

1. ALL PERMANENT EQUIPMENT AND COMPONENTS.
2. TEMPORARY OR MOVABLE EQUIPMENT THAT IS PERMANENTLY ATTACHED (E.G. HARD WIRED) TO THE BUILDING UTILITY SERVICES SUCH AS ELECTRICITY, GAS OR WATER.
3. MOVABLE EQUIPMENT WHICH IS STATIONED IN ONE PLACE FOR MORE THAN 8 HOURS AND HEAVIER THAN 400 POUNDS ARE REQUIRED TO BE ANCHORED WITH TEMPORARY ATTACHMENTS.

THE FOLLOWING MECHANICAL AND ELECTRICAL COMPONENTS SHALL BE POSITIVELY ATTACHED TO THE STRUCTURE, BUT THE ATTACHMENT NEED NOT BE DETAILED ON THE PLANS. THESE COMPONENTS SHALL HAVE FLEXIBLE CONNECTIONS PROVIDED BETWEEN THE COMPONENT AND ASSOCIATED DUCTWORK, PIPING, AND CONDUIT.

A. COMPONENTS WEIGHING LESS THAN 400 POUNDS AND HAVE A CENTER OF MASS LOCATED 4 FEET OR LESS ABOVE THE ADJACENT FLOOR OR ROOF LEVEL THAT DIRECTLY SUPPORT THE COMPONENT.

B. COMPONENTS WEIGHING LESS THAN 20 POUNDS, OR IN THE CASE OF DISTRIBUTED SYSTEMS, LESS THAN 5 POUNDS PER FOOT, WHICH ARE SUSPENDED FROM A ROOF OR FLOOR OR HUNG FROM A WALL.

FOR THOSE ELEMENTS THAT DO NOT REQUIRE DETAILS ON THE APPROVED DRAWINGS, THE INSTALLATION SHALL BE SUBJECT TO THE APPROVAL OF THE DESIGN PROFESSIONAL IN GENERAL RESPONSIBLE CHARGE OR STRUCTURAL ENGINEER DELEGATED RESPONSIBILITY AND THE DSA DISTRICT STRUCTURAL ENGINEER. THE PROJECT INSPECTOR WILL VERIFY THAT ALL COMPONENTS AND EQUIPMENT HAVE BEEN ANCHORED IN ACCORDANCE WITH ABOVE REQUIREMENTS.

PIPING, DUCTWORK, AND ELECTRICAL DISTRIBUTION SYSTEM BRACING NOTE:

PIPING, DUCTWORK, AND ELECTRICAL DISTRIBUTION SYSTEMS SHALL BE BRACED TO COMPLY WITH THE FORCES AND DISPLACEMENTS PRESCRIBED IN ASCE 7-10 SECTION 13.3 AS DEFINED IN ASCE 7-10 SECTION 13.6.8, 13.6.7, 13.6.5.6, AND 2016 CBC, SECTIONS 1616A.1.24, 1616A.1.25, AND 1616A.1.26.

THE METHOD OF SHOWING BRACING AND ATTACHMENTS TO THE STRUCTURE FOR THE IDENTIFIED DISTRIBUTION SYSTEMS ARE AS NOTED BELOW. WHEN BRACING AND ATTACHMENTS ARE BASED ON PRE APPROVED INSTALLATION GUIDE (e.g. SMACNA OR OSHPD OPM), COPIES OF THE BRACING SYSTEM INSTALLATION GUIDE OR MANUAL SHALL BE AVAILABLE ON THE JOBSITE PRIOR TO THE START OF AND DURING THE HANGING AND BRACING OF THE DISTRIBUTION SYSTEM. THE STRUCTURAL ENGINEER OF RECORD SHALL VERIFY THE ADEQUACY OF THE STRUCTURE TO SUPPORT THE HANGER AND BRACE LOADS.

☒ MECHANICAL/PLUMBING/DUCTS

M☐ PP☐ D☐ -OPTION 1:☐ DETAILED ON THE APPROVED DRAWINGS WITH PROJECT SPECIFIC NOTES AND DETAILS.

M☒ PP☐ D☒ -OPTION 2:☒ SHALL COMPLY WITH THE OSHPD PRE-APPROVAL (OPM #) # 0043-13

M☐ PP☐ D☐ -OPTION 3:☐ SHALL COMPLY WITH THE SMACNA SEISMIC RESTRAINT MANUAL, OSHPD EDITION (2009), INCLUDING ANY ADDENDA. FASTENERS AND OTHER ATTACHMENTS NOT SPECIFICALLY IN THE SMACNA SEISMIC RESTRAINT MANUAL, OSHPD EDITION, ARE DETAILED ON THE APPROVED DRAWINGS WITH PROJECT SPECIFIC NOTES AND DETAILS. THE DETAILS SHALL ACCOUNT APPLICABLE SEISMIC HAZARD LEVEL ____ AND CONNECTIONS LEVEL ____ FOR THE PROJECT AND CONDITIONS.

AIR TERMINAL SCHEDULE

MANUFACTURER: TITUS (EXCEPT AS NOTED)

TND		NOZZLE DIFFUSER	TND-AA DIFFUSER ALUMINUM CONSTRUCTION ALUMINUM FINISH
CD-1		CEILING DIFFUSER	TDC - COMPLETE WITH EQUALIZING GRID, THROW-REDUCING VANES, STEEL CONSTRUCTION
DS		DUCT SUPPLY DIFFUSER	S300FS - STEEL CONSTRUCTION, DOUBLE DEFLECTION, 3/4" BLADE SPACING, FRONT BLADES PARALLEL TO SHORT DIMENSION
WRG		WALL RETURN GRILLE	355R - LOUVERS ON 1/2" CENTERS, STEEL CONSTRUCTION, LOUVERS PARALLEL WITH LONG DIMENSION
CR		CEILING RETURN	SAME AS CD EXCEPT NO EQUALIZING GRID
EG		EXHAUST GRILLE CEILING RETURN	50F5 - 1/2" x 1/2" x 1/2" EGGCRATE, ALUMINUM GRID
DL		DOOR LOUVER	T700 - STEEL CONSTRUCTION WITH FLANGED AND AUXILIARY FRAME

NOTES: 1. ADAPTER NEEDED FOR TRANSITION FROM SQUARE NECK TO ROUND DUCT.
2. SIZE (NECK/FACE) TYPE
CFM (NO. OF THROW) FACE SIZE FOR T-BAR CEILING ONLY

MECHANICAL LEGEND

SYMBOL	ABBREVIATION	DESCRIPTION
X / X		EQUIPMENT TYPE / EQUIPMENT NUMBER
X / X-X		DETAIL / DRAWING NUMBER / SHEET NUMBER
	SA OR OA	SECTION THRU SUPPLY AIR OR OUTSIDE AIR DUCT
	RA OR EA	SECTION THRU RETURN AIR OR EXHAUST AIR DUCT
		ROUND DUCT DOWN
DN	DN OR UP	SLOPE DUCT DOWN OR UP IN DIRECTION OF FLOW
	AL	ACOUSTICAL LINING
	FC	FLEXIBLE DUCT CONNECTION
	VD	VOLUME DAMPER
	FD	FIRE DAMPER
	TV	TURNING VANES
		FLEXIBLE DUCT
		45° ROUND DUCT TAKE-OFF
		45° RECTANGULAR DUCT TAKE-OFF
		90° TURN - ROUND DUCT
		90° RADIUS TURN - ROUND OR RECTANGULAR DUCT
		SQUARE TO ROUND DUCT TRANSITION
		DUCT TRANSITION
		RECTANGULAR DUCT 90° SPLIT
T		THERMOSTAT @ 46" AFF MAX TO CENTER LINE
	AP	ACCESS PANEL
	POC	POINT OF CONNECTION
	POD	POINT OF DEMOLITION
	BHP	BRAKE HORSEPOWER
	HP	HORSEPOWER
	SAD	SEE ARCHITECTURAL DRAWINGS
	SSD	SEE STRUCTURAL DRAWINGS
	SCD	SEE CIVIL DRAWINGS
	AFC	ABOVE FINISH CEILING

BLDG 'MECHANICAL' SHEET LIST

M1.2	MECHANICAL SCHEDULES
M5.6	OPM-0043-13 REFERENCE
M1.1	MECHANICAL SCHEDULES & LEGENDS
M-A2.1	MECHANICAL FLOOR PLAN
M-A2.2	MECHANICAL CONTROL ROOM LEVEL
M-A2.3	MECHANICAL TECH LEDGE LEVEL
M-A3.1	MECHANICAL PIPING PLAN
M-A3.2	MECHANICAL PIPING CONTROL ROOM LEVEL
M-A3.3	MECHANICAL PIPING TECH LEDGE LEVEL
M-B2.1	CTE BUILDING MECHANICAL PLAN
M4.1	MECHANICAL DETAILS
M4.2	MECHANICAL DETAILS
M4.3	MECHANICAL DETAILS
M4.4	MECHANICAL DETAILS
M5.1	MECHANICAL CONTROLS
M5.2	MECHANICAL CONTROLS
M5.3	MECHANICAL CONTOLS
M5.4	MECHANICAL CONTROLS
M5.5	MECHANICAL CONTROLS

QUATTROCCHI KWOK ARCHITECTS
Main Office:
636 Fifth Street, Santa Rosa, CA 95404
Pleasanton Office:
600 Main Street, Suite E,
Pleasanton, CA 94566
(707) 576-0829

COSTA ENGINEERS INC.
3274 Villa Lane Napa, CA 94558 ph. 707.252-9177 fax 707-252-0473

REGISTERED PROFESSIONAL ENGINEER
CHRISTOPHER J. POE COSTA
NO. 31500
Exp. 12-31-20
MECHANICAL
STATE OF CALIFORNIA

FREEDOM HIGH SCHOOL

PERFORMING ARTS AND CTE FACILITIES

1050 NEROLY RD
OAKLEY, CA 94561

LIBERTY UNION HIGH SCHOOL DISTRICT

ARCH PROJECT NO: 1739.00
DRAWN BY: Author
DRAWING SCALE: 12" = 1'-0"
PTN: 61721-0068

BID SET

AUGUST 13, 2019

SHEET TITLE

MECHANICAL SCHEDULES & LEGENDS

SHEET NUMBER

M1.1

8/6/2019 9:58:09 AM C:\Users\robert\Documents\18036 Freedom HS PAC rvt16_robert.rvt

AC SCHEDULE

MARK	MODEL NO	UNIT SIZE	ESP	SUPPLY FAN RPM	AIRFLOW	MIN OSA	TOTAL COOLING (MBH)	SENSIBLE COOLING (MBH)	GAS HTG, STAGE 1 INPUT/OUTPUT (MBH)	GAS HTG, STAGE 2 INPUT/OUTPUT (MBH)	IEER	ELECTRICAL DATA			WEIGHT	SERVICE	REMARKS
												V-Ø-Hz	MCA	MOCP			
AC-1	48LCD014	15	1.00 in-wg	796	5000 CFM	1200 CFM	150.0	116.0	141/114	176/143	19.10	460-3-60	33.9	45	2933 lb	HOUSE	1,2,3,4,6
AC-2	48LCD014	15	1.00 in-wg	796	5000 CFM	1200 CFM	150.0	116.0	141/114	176/143	19.10	460-3-60	33.9	45	2933 lb	HOUSE	1,2,3,4,6
AC-3	48LCD017	17	1.00 in-wg	873	6000 CFM	1200 CFM	185.0	142.0	176/142	220/178	17.20	460-3-60	40.7	50	3250 lb	STAGE	1,2,3,4,6
AC-4	48LCD006	6	0.75 in-wg	1303	2000 CFM	125 CFM	61.0	47.0	50/41	72/59	16.20	460-3-60	15.0	20	1029 lb	COMMONS	1,2,3,5,6
AC-5	48LCD007	7	1.00 in-wg	767	2400 CFM	500 CFM	74.0	57.0	50/41	72/59	20.30	460-3-60	20.0	25	1655 lb	CORAL CLASSROOM	1,2,3,5,6
AC-6	48LCD005	5	0.75 in-wg	1165	1600 CFM	475 CFM	49.0	34.0	60/49	-	16.40	460-3-60	13.0	15	1079 lb	TA CLASROOM	1,2,3,6
AC-7	48LCD005	5	0.75 in-wg	1165	1600 CFM	200 CFM	49.0	34.0	60/49	-	16.40	460-3-60	13.0	15	1019 lb	DRESSING ROOM	1,2,3,6
AC-8	48LCD005	5	0.75 in-wg	1165	1600 CFM	150 CFM	49.0	34.0	60/49	-	16.40	460-3-60	13.0	15	1019 lb	PREP ROOM	1,2,3,6
AC-9	48LCD009	9	0.75 in-wg	657	3400 CFM	450 CFM	105.0	81.0	120/96	150/120	19.80	460-3-60	25.0	30	2372 lb	LOBBY	1,2,3,4,6

REMARKS:
1. PROVIDE WITH ECONOMIZER WITH BAROMETRIC RELIEF
2. PROVIDE WITH WIRED PELICAN THERMOSTAT AND CO2 SENSOR FOR DEMAND CONTROL VENTILATION
3. PROVIDE WITH VFD WITH DIGITAL INTERFACE
4. PROVIDE WITH AUTOMATIC SHUT OFF FIELD INSTALLED DUCT SMOKE DETECTOR PER CMC 608
5. AUTOMATIC SHUTOFF DUCT SMOKE DETECTOR NOT REQUIRED PER CMC 608 ECECPTION 2
6. PROVIDE WITH LOUVERD HAIL GARDS AND HINGED ACCESS PANELS

GENERAL NOTE: ALL UNIT WEIGHTS INCLUDE UNIT WEIGHT, CURB WEIGHT, AND ALL ASSOCIATED ACCESSORIES.

Mechanical Ventilation

ROOM #	ROOM NAME	Area	SF	Occupant Density (People per 1000 sq.ft.)	ASHRAE 62.1 OCCUPANCY	Occupancy	CAO CODE ANALYSIS OCCUPANCY	Area Outdoor Air Rate (Ra)	People Outdoor Air Rate (Rp)	EZ	ASHRAE	120.1-A.15*SF	15 CFM/CAO/2)	DESIGN OSA
101	LOBBY	1252	1184	150	62-Public Assembly Spaces - Lobbies	188	237	0.12	5	0.8	1353	178	1778	450
101	CONSTRUCTION LAB	2274	2274	35	62-Educational Facilities -Wood/metal shop	80	61	0.18	10	0.8	1511	342	458	
102	CORRIDOR	94	94	0	62-General - Corridor	0	6	0.06	0	0.8	8	15	45	
102	EQUIPMENT AREA	1096	1096	20	62-Educational Facilities - Art Classroom	22	21	0.18	10	0.8	521	165	158	
107	CHORAL	1297	1297	35	62-Educational Facilities - Classrooms Age 9 Plus	46	65	0.12	10	0.8	770	195	488	500
108	THEATRE ARTS	1213	1213	35	62-Educational Facilities - Classrooms Age 9 Plus	43	61	0.12	10	0.8	720	182	458	
109	STUDENT COMMONS	1665	1665	0	62-General - Corridor	0	38	0.06	0	0.8	125	250	285	
111	GIRLS DRESSING ROOM	239	239	35	60-Educational Facilities -MUSIC/THEATER/DANCE	9	12	0.06	10	0.8	130	36	90	
112	BOYS DRESSING ROOM	224	224	35	60-Educational Facilities -MUSIC/THEATER/DANCE	8	12	0.06	10	0.8	116	34	90	
113	PROP STORAGE	553	553	2	62-Office Buildings - Occupiable Storage	2	29	0.06	5	0.8	54	83	218	
114	SET PREP	390	390	2	62-Office Buildings - Occupiable Storage	1	8	0.06	5	0.8	35	59	60	
114A	PAINT STORAGE	65	65	2	62-General -Occupiable storage rooms FOR Liquids and gel	1	0	0.12	5	0.8	16	10	0	
117	STAGE	2232	2232	35	60-Educational Facilities -MUSIC/THEATER/DANCE	79	400	0.06	10	0.8	1155	335	3000	
119	AUDITORIUM	3951	3951	150	62-Public Assembly Spaces -Auditorium seating area	593	300	0.06	5	0.8	4003	593	2250	
122	TICKETS & CONCESSION	212	212	5	62-Office Buildings - Office Space	2	3	0.06	5	0.8	29	32	23	
124	CIRCULATION	145	145	0	62-General - Corridor	0	6	0.06	0	0.8	11	22	45	
125	PRACTICE ROOM	97	97	35	62-Educational Facilities - Classrooms Age 9 Plus	4	5	0.12	10	0.8	65	15	38	50
126	PRACTICE ROOM	82	82	35	62-Educational Facilities - Classrooms Age 9 Plus	3	5	0.12	10	0.8	50	13	38	50
127	SHARED OFFICE	140	140	5	62-Office Buildings - Office Space	1	2	0.06	5	0.8	16	21	15	25
133	GIRLS CHANGING ROOM	121	121	35	60-Educational Facilities -MUSIC/THEATER/DANCE	5	3	0.06	10	0.8	71	19	23	
135	BOYS CHANGING ROOM	115	115	35	60-Educational Facilities -MUSIC/THEATER/DANCE	5	3	0.06	10	0.8	71	18	23	
201	CONTROL	238	238	5	62-Office Buildings - Office Space	2	3	0.06	5	0.8	30	36	23	

REMARKS:
O.W STANDS FOR OPERABLE WINDOW

O,W

QUATTROCCHI KWOK ARCHITECTS
Main Office:
636 Fifth Street, Santa Rosa, CA 95404
Pleasanton Office:
600 Main Street, Suite E,
Pleasanton, CA 94566
(707) 576-0829

COSTA ENGINEERS INC.
3274 Villa Lane Napa, CA 94558 ph: 707.252.9177 fax: 707-252-0473

REGISTERED PROFESSIONAL ENGINEER
CHRISTOPHER J. POE COSTA
NO. 31500
Exp. 12-31-20
MECHANICAL
STATE OF CALIFORNIA

FREEDOM HIGH SCHOOL

PERFORMING ARTS AND CTE FACILITIES

1050 NEROLY RD
OAKLEY, CA 94561

LIBERTY UNION HIGH SCHOOL DISTRICT

ARCH PROJECT NO: 1739.00
DRAWN BY: Author
DRAWING SCALE:
PTN: 61721-0068

BID SET

AUGUST 13, 2019

SHEET TITLE

MECHANICAL SCHEDULES

SHEET NUMBER

M1.2

7/17/2019 6:04:56 PM C:\Users\mquevedo\Documents\18036 Freedom HS PAC rvt16_mquevedo@costaengineers.com.rvt

GENERAL NOTES

1. FOR MECHANICAL GENERAL NOTES, LEGENDS, AND SYMBOLS, REFER TO SHEET M1.1
2. MECHANICAL CONTRACTOR SHALL BE RESPONSIBLE FOR COORDINATING THE MECHANICAL WORK WITH OTHER TRADES.

WALL LEGENDS

NOTES:
ALL WOOD FRAMING IS 6" & 4" STUDS, U.O.N., S.S.D.
ALL WALLS TO BE ACOUSTIC , U.O.N.

1 HR FIRE RATED WALL

WOOD FRAMING - NON RATED, INSULATED

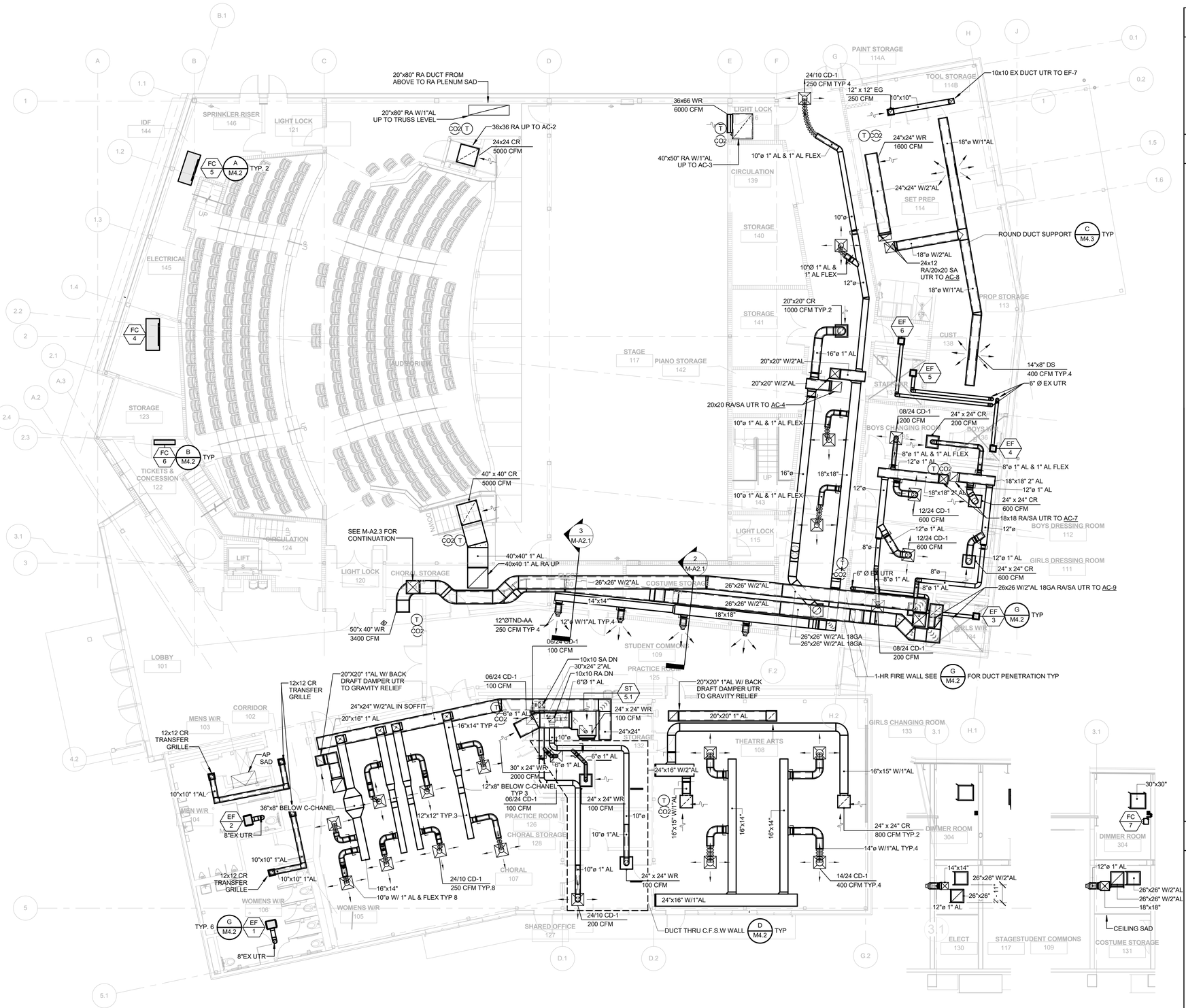

1 FIRST FLOOR MECHANICAL FLOOR PLAN

SCALE: 1/8" = 1'-0"

QUATTROCCHI KWOK ARCHITECTS
Main Office:
636 Fifth Street, Santa Rosa, CA 95404
Pleasanton Office:
600 Main Street, Suite E,
Pleasanton, CA 94566
(707) 576-0829

COSTA ENGINEERS INC.
3274 Villa Lane Napa, CA 94558 ph. 707.252-9177 fax 707-252-0473
REGISTERED PROFESSIONAL ENGINEER CHRISTOPHER J. COSTA NO. 31500 Exp. 12-31-20 MECHANICAL STATE OF CALIFORNIA

FREEDOM HIGH SCHOOL

PERFORMING ARTS AND CTE FACILITIES

1050 NEROLY RD
OAKLEY, CA 94561

LIBERTY UNION HIGH SCHOOL DISTRICT

ARCH PROJECT NO:	1739.00
DRAWN BY:	Author
DRAWING SCALE:	1/8" = 1'-0"
PTN:	61721-0068

BID SET

AUGUST 13, 2019

SHEET TITLE

MECHANICAL FLOOR PLAN

SHEET NUMBER

M-A2.1

7/17/2019 6:05:04 PM C:\Users\mquevedo\Documents\18036 Freedom HS PAC nr16_mquevedo@costaengineers.com.rvt

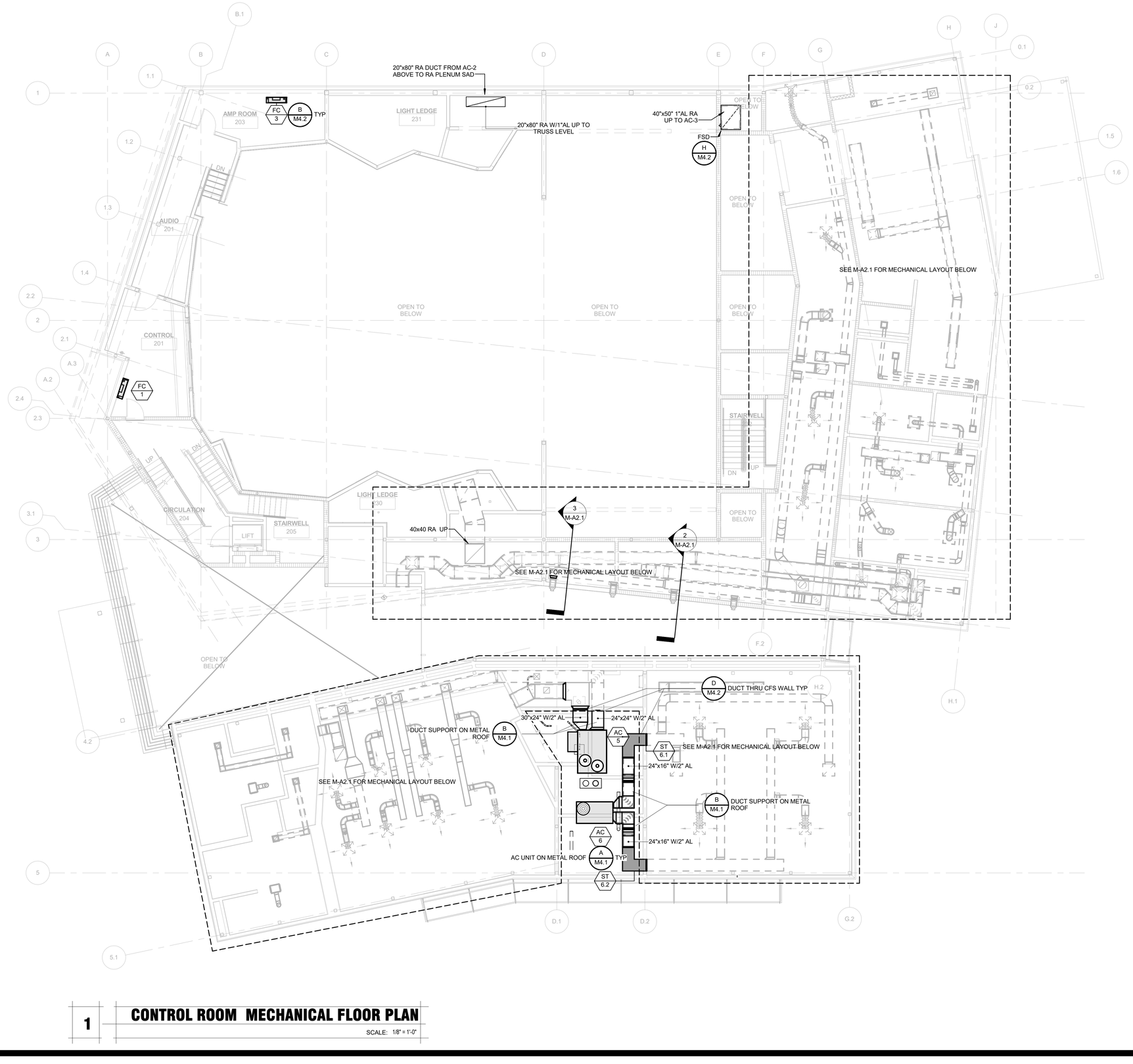

1 **CONTROL ROOM MECHANICAL FLOOR PLAN**

SCALE: 1/8" = 1'-0"

GENERAL NOTES

1. FOR MECHANICAL GENERAL NOTES, LEGENDS, AND SYMBOLS, REFER TO SHEET M1.1
2. MECHANICAL CONTRACTOR SHALL BE RESPONSIBLE FOR COORDINATING THE MECHANICAL WORK WITH OTHER TRADES.
3. PATCH ALL WALLS, CEILINGS, ROOF AND OTHER SURFACES TO MATCH EXISTING CONDITIONS.

WALL LEGENDS

NOTES:
ALL WOOD FRAMING IS 6" & 4" STUDS, U.O.N., S.S.D.
ALL WALLS TO BE ACOUSTIC , U.O.N.

1 HR FIRE RATED WALL

WOOD FRAMING - NON RATED, INSULATED

QUATTROCCHI KWOK ARCHITECTS
Main Office:
636 Fifth Street, Santa Rosa, CA 95404
Pleasanton Office:
600 Main Street, Suite E,
Pleasanton, CA 94566
(707) 576-0829

COSTA ENGINEERS INC.
3274 Villa Lane Napa, CA 94558 ph: 707-252-9177 fax: 707-252-4473

REGISTERED PROFESSIONAL ENGINEER
CHRISTOPHER J. DEL CORE
NO. 31600
Exp. 12-31-20
MECHANICAL
STATE OF CALIFORNIA

FREEDOM HIGH SCHOOL

PERFORMING ARTS AND CTE FACILITIES

1050 NEROLY RD
OAKLEY, CA 94561

LIBERTY UNION HIGH SCHOOL DISTRICT

ARCH PROJECT NO:	1739.00
DRAWN BY:	Author
DRAWING SCALE:	1/8" = 1'-0"
PTN:	61721-0068

BID SET

AUGUST 13, 2019

SHEET TITLE

MECHANICAL CONTROL ROOM LEVEL

SHEET NUMBER

M-A2.2

7/17/2019 6:05:06 PM C:\Users\mquevedo\Documents\18036 Freedom HS PAC rvt16_mquevedo@costaengineers.com.rvt

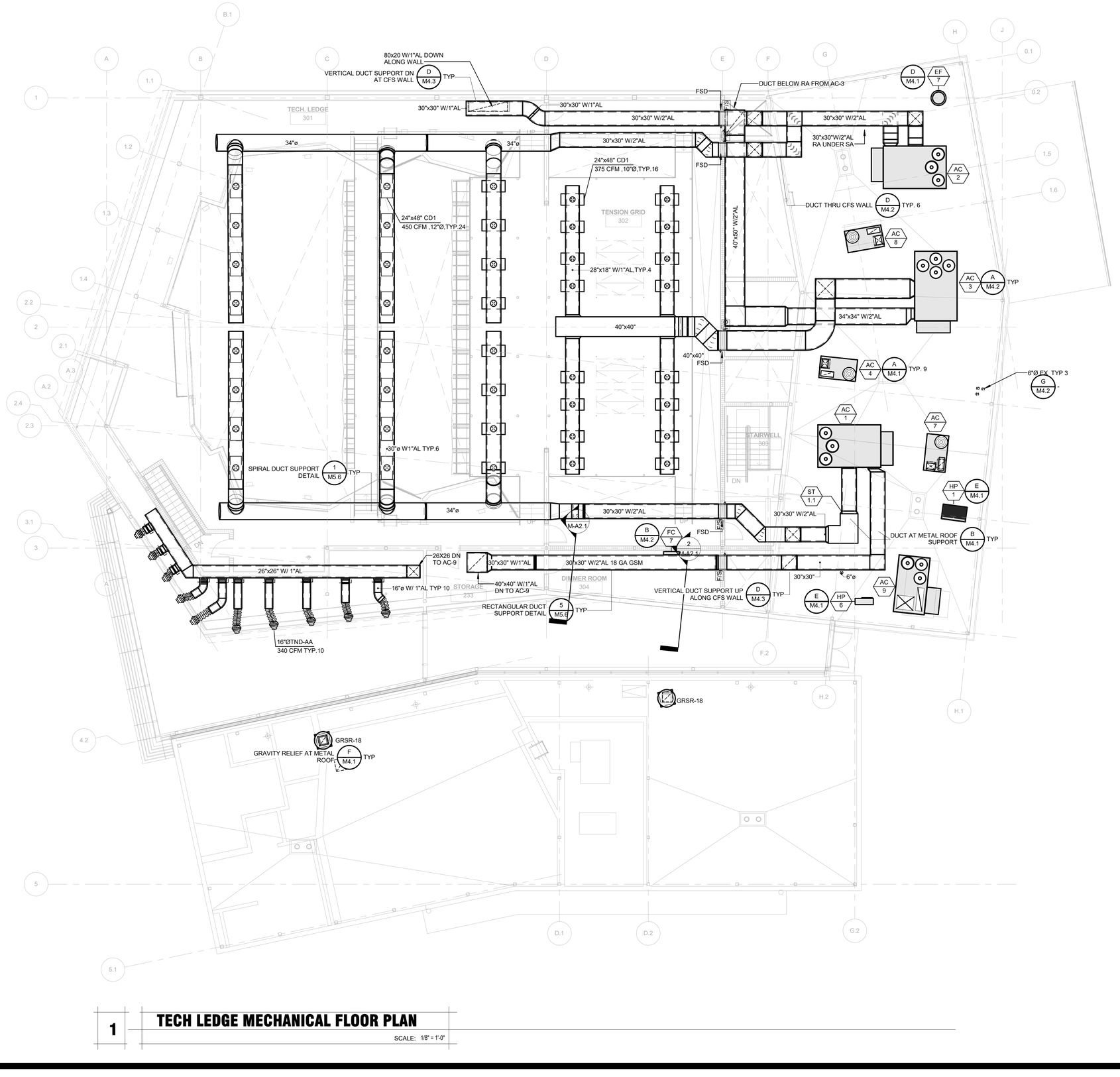

1 **TECH LEDGE MECHANICAL FLOOR PLAN**

SCALE: 1/8" = 1'-0"

GENERAL NOTES

1. FOR MECHANICAL GENERAL NOTES, LEGENDS, AND SYMBOLS, REFER TO SHEET M1.1
2. MECHANICAL CONTRACTOR SHALL BE RESPONSIBLE FOR COORDINATING THE MECHANICAL WORK WITH OTHER TRADES.
3. PATCH ALL WALLS, CEILINGS, ROOF AND OTHER SURFACES TO MATCH EXISTING CONDITIONS.

WALL LEGENDS

NOTES:
ALL WOOD FRAMING IS 6" & 4" STUDS, U.O.N., S.S.D.
ALL WALLS TO BE ACOUSTIC , U.O.N.

1 HR FIRE RATED WALL

WOOD FRAMING - NON RATED, INSULATED

QUATTROCCHI KWOK ARCHITECTS
Main Office:
636 Fifth Street, Santa Rosa, CA 95404
Pleasanton Office:
600 Main Street, Suite E,
Pleasanton, CA 94566
(707) 576-0829

COSTA ENGINEERS INC.
3274 Villa Lane Napa, CA 94558 ph: 707.252.9177 fax: 707-252-0473
REGISTERED PROFESSIONAL ENGINEER CHRISTOPHER J. POE NO. 31500 Exp. 12-31-20 MECHANICAL STATE OF CALIFORNIA

FREEDOM HIGH SCHOOL

PERFORMING ARTS AND CTE FACILITIES

1050 NEROLY RD
OAKLEY, CA 94561

LIBERTY UNION HIGH SCHOOL DISTRICT

ARCH PROJECT NO:	1739.00
DRAWN BY:	Author
DRAWING SCALE:	1/8" = 1'-0"
PTN:	61721-0068

BID SET

AUGUST 13, 2019

SHEET TITLE

MECHANICAL TECH LEDGE LEVEL

SHEET NUMBER

M-A2.3

7/17/2019 6:05:08 PM C:\Users\mquevedo\Documents\18036 Freedom HS PAC rvt16_mquevedo@costaengineers.com.rvt

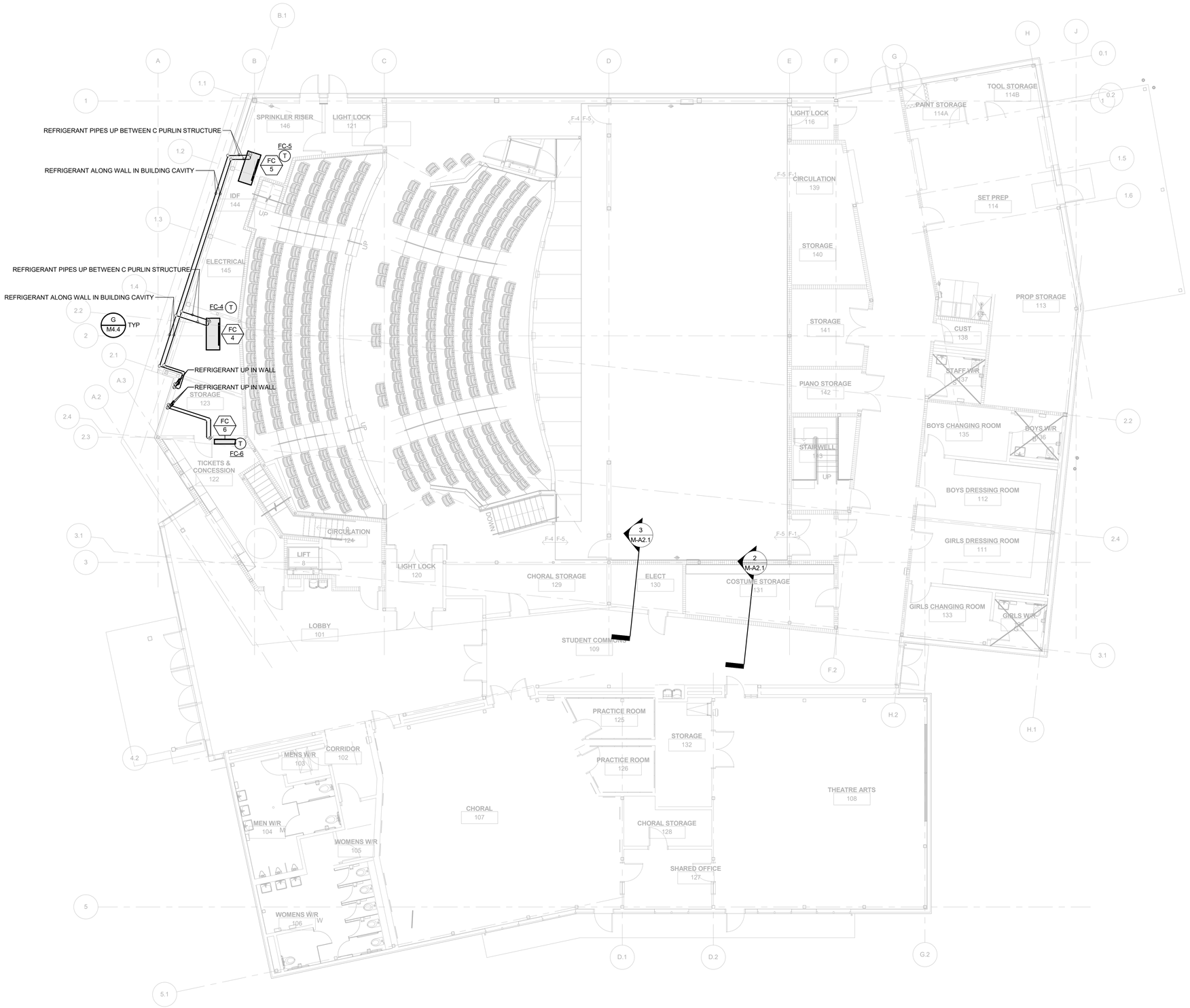

1 **FIRST FLOOR MECHANICAL PIPING PLAN**

SCALE: 1/8" = 1'-0"

GENERAL NOTES

1. FOR MECHANICAL GENERAL NOTES, LEGENDS, AND SYMBOLS, REFER TO SHEET M1.1
2. MECHANICAL CONTRACTOR SHALL BE RESPONSIBLE FOR COORDINATING THE MECHANICAL WORK WITH OTHER TRADES.
3. PATCH ALL WALLS, CEILINGS, ROOF AND OTHER SURFACES TO MATCH EXISTING CONDITIONS.

WALL LEGENDS

NOTES:
ALL WOOD FRAMING IS 6" & 4" STUDS, U.O.N., S.S.D.
ALL WALLS TO BE ACOUSTIC , U.O.N.

1 HR FIRE RATED WALL

WOOD FRAMING - NON RATED, INSULATED

QUATTROCCHI KWOK ARCHITECTS
Main Office:
636 Fifth Street, Santa Rosa, CA 95404
Pleasanton Office:
600 Main Street, Suite E,
Pleasanton, CA 94566
(707) 576-0829

COSTA ENGINEERS INC.
3274 Villa Lane Napa, CA 94558 ph: 707-252-9177 fax: 707-252-4473

REGISTERED PROFESSIONAL ENGINEER
CHRISTOPHER J. DEL CORE
NO. 31600
Exp. 12-31-20
MECHANICAL
STATE OF CALIFORNIA

FREEDOM HIGH SCHOOL

PERFORMING ARTS AND CTE FACILITIES

1050 NEROLY RD
OAKLEY, CA 94561

LIBERTY UNION HIGH SCHOOL DISTRICT

ARCH PROJECT NO:	1739.00
DRAWN BY:	Author
DRAWING SCALE:	1/8" = 1'-0"
PTN:	61721-0068

BID SET

AUGUST 13, 2019

SHEET TITLE

MECHANICAL PIPING PLAN

SHEET NUMBER

M-A3.1

7/17/2019 6:05:10 PM C:\Users\mquevedo\Documents\18036 Freedom HS PAC rvt16_mquevedo@costaengineers.com.rvt

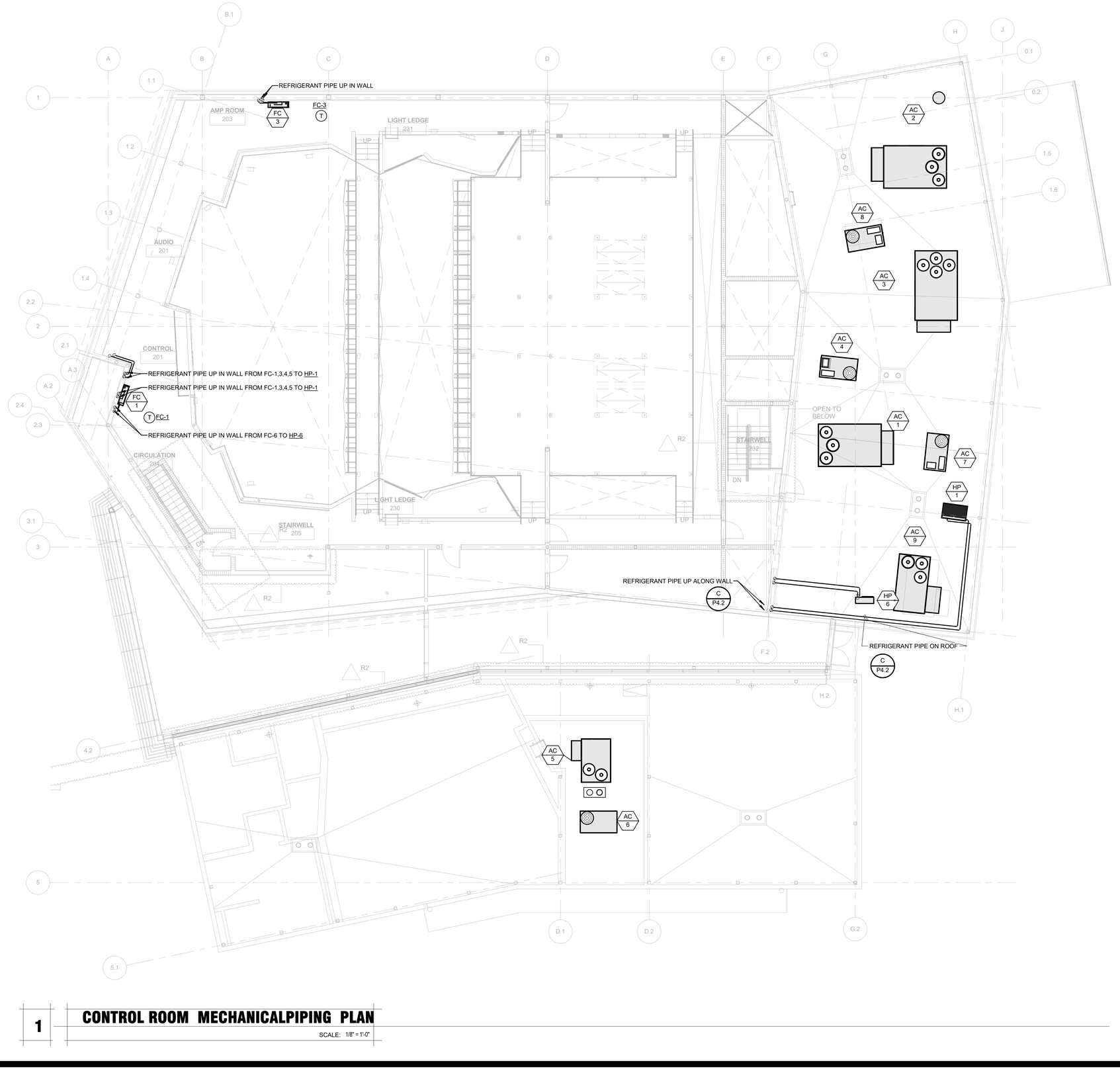

1 **CONTROL ROOM MECHANICALPIPING PLAN**

SCALE: 1/8" = 1'-0"

GENERAL NOTES

1. FOR MECHANICAL GENERAL NOTES, LEGENDS, AND SYMBOLS, REFER TO SHEET M1.1
2. MECHANICAL CONTRACTOR SHALL BE RESPONSIBLE FOR COORDINATING THE MECHANICAL WORK WITH OTHER TRADES.
3. PATCH ALL WALLS, CEILINGS, ROOF AND OTHER SURFACES TO MATCH EXISTING CONDITIONS.

WALL LEGENDS

NOTES:
ALL WOOD FRAMING IS 6" & 4" STUDS, U.O.N., S.S.D.
ALL WALLS TO BE ACOUSTIC , U.O.N.

1 HR FIRE RATED WALL

WOOD FRAMING - NON RATED, INSULATED

QUATTROCCHI KWOK ARCHITECTS
Main Office:
636 Fifth Street, Santa Rosa, CA 95404
Pleasanton Office:
600 Main Street, Suite E,
Pleasanton, CA 94566
(707) 576-0829

COSTA ENGINEERS INC.
3274 Villa Lane Napa, CA 94558 ph: 707.252.9177 fax: 707-252-0473
REGISTERED PROFESSIONAL ENGINEER CHRISTOPHER J. POE LICENSE NO. 31500 Exp. 12-31-20 MECHANICAL STATE OF CALIFORNIA

FREEDOM HIGH SCHOOL

PERFORMING ARTS AND CTE FACILITIES

1050 NEROLY RD
OAKLEY, CA 94561

LIBERTY UNION HIGH SCHOOL DISTRICT

ARCH PROJECT NO:	1739.00
DRAWN BY:	Author
DRAWING SCALE:	1/8" = 1'-0"
PTN:	61721-0068

BID SET

AUGUST 13, 2019

SHEET TITLE

MECHANICAL PIPING CONTROL ROOM LEVEL

SHEET NUMBER

M-A3.2

7/17/2019 6:05:11 PM C:\Users\mquevedo\Documents\18036 Freedom HS PAC_rvt16_mquevedo@costaengineers.com.rvt

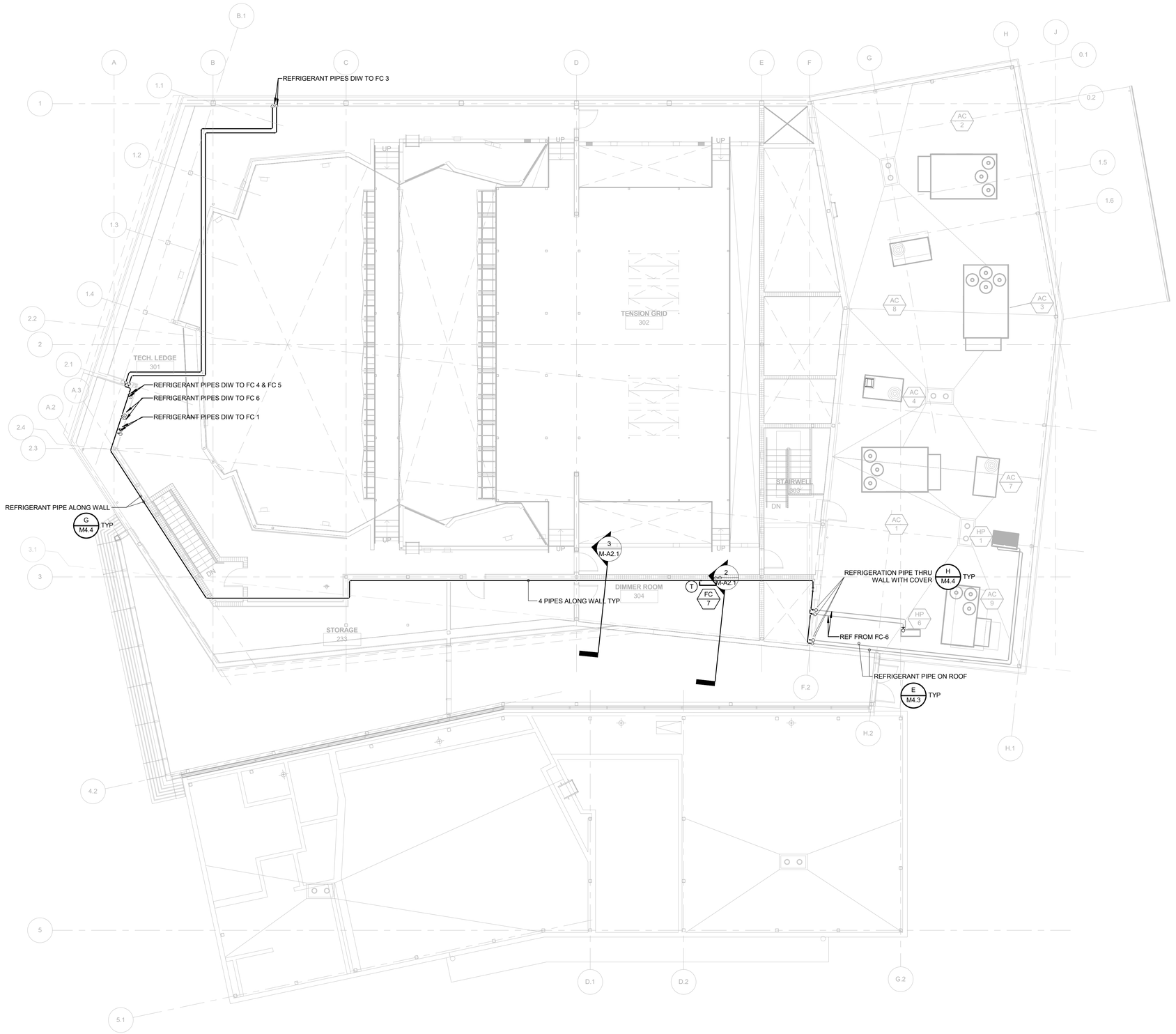

1 TECH LEDGE MECHANICAL PIPING PLAN

SCALE: 1/8" = 1'-0"

GENERAL NOTES

1. FOR MECHANICAL GENERAL NOTES, LEGENDS, AND SYMBOLS, REFER TO SHEET M1.1
2. MECHANICAL CONTRACTOR SHALL BE RESPONSIBLE FOR COORDINATING THE MECHANICAL WORK WITH OTHER TRADES.
3. PATCH ALL WALLS, CEILINGS, ROOF AND OTHER SURFACES TO MATCH EXISTING CONDITIONS.

WALL LEGENDS

NOTES:
ALL WOOD FRAMING IS 6" & 4" STUDS, U.O.N., S.S.D.
ALL WALLS TO BE ACOUSTIC , U.O.N.

1 HR FIRE RATED WALL

WOOD FRAMING - NON RATED, INSULATED

QUATTROCCHI KWOK ARCHITECTS
Main Office:
636 Fifth Street, Santa Rosa, CA 95404
Pleasanton Office:
600 Main Street, Suite E,
Pleasanton, CA 94566
(707) 576-0829

COSTA ENGINEERS INC.
3274 Villa Lane Napa, CA 94558 ph: 707-252-9177 fax: 707-252-9473

REGISTERED PROFESSIONAL ENGINEER
CHRISTOPHER J. POE LOPE
NO. 31500
Exp. 12-31-20
MECHANICAL
STATE OF CALIFORNIA

FREEDOM HIGH SCHOOL

PERFORMING ARTS AND CTE FACILITIES

1050 NEROLY RD
OAKLEY, CA 94561

LIBERTY UNION HIGH SCHOOL DISTRICT

ARCH PROJECT NO:	1739.00
DRAWN BY:	Author
DRAWING SCALE:	1/8" = 1'-0"
PTN:	61721-0068

BID SET

AUGUST 13, 2019

SHEET TITLE

MECHANICAL PIPING TECH LEDGE LEVEL

SHEET NUMBER

M-A3.3

7/17/2019 6:05:12 PM C:\Users\mquevedo\Documents\18036 Freedom HS PAC rvt16_mquevedo@costaengineers.com.rvt

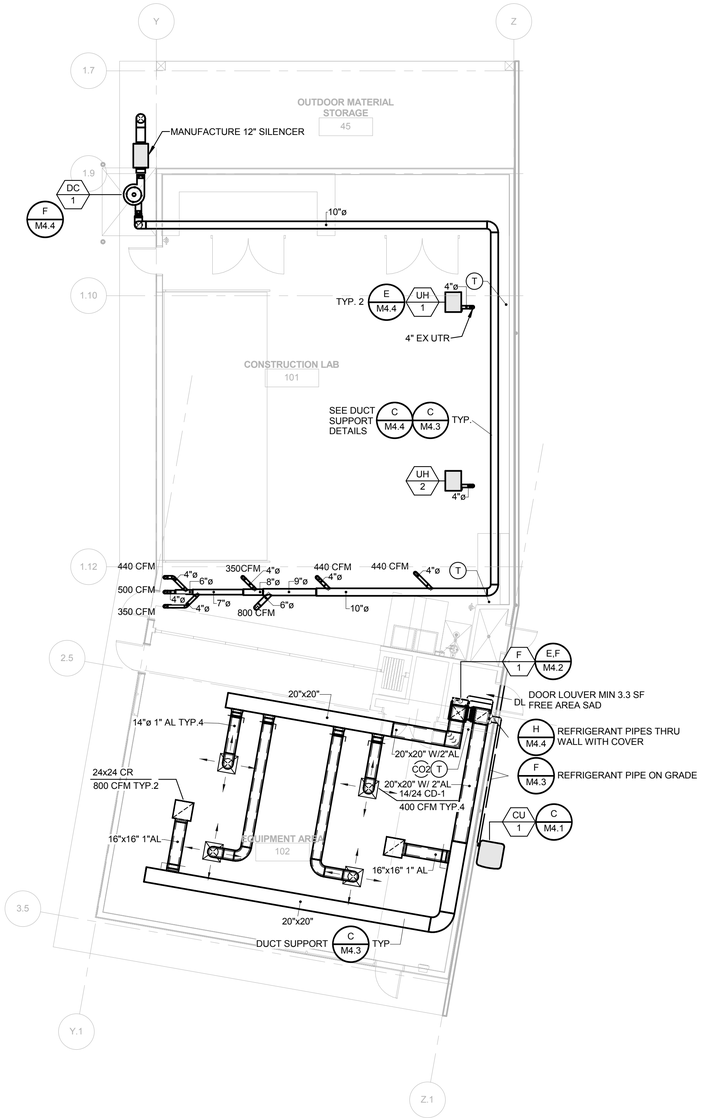

1 CTE BUILDING MECHANICAL FLOOR PLAN

SCALE: 1/8" = 1'-0"

GENERAL NOTES

1. FOR MECHANICAL GENERAL NOTES, LEGENDS, AND SYMBOLS, REFER TO SHEET M1.1
2. MECHANICAL CONTRACTOR SHALL BE RESPONSIBLE FOR COORDINATING THE MECHANICAL WORK WITH OTHER TRADES.

WALL LEGENDS

NOTES:
ALL WOOD FRAMING IS 6" & 4" STUDS, U.O.N., S.S.D.
ALL WALLS TO BE ACOUSTIC , U.O.N.

1 HR FIRE RATED WALL

WOOD FRAMING - NON RATED, INSULATED

QUATTROCCHI KWOK ARCHITECTS
Main Office:
636 Fifth Street, Santa Rosa, CA 95404
Pleasanton Office:
600 Main Street, Suite E,
Pleasanton, CA 94566
(707) 576-0829

COSTA ENGINEERS INC.
3274 Villa Lane Napa, CA 94558 ph: 707.252.9177 fax: 707-252-0473
REGISTERED PROFESSIONAL ENGINEER
CHRISTOPHER J. POE COSTA
NO. 31500
Exp. 12-31-20
MECHANICAL
STATE OF CALIFORNIA

FREEDOM HIGH SCHOOL

PERFORMING ARTS AND CTE FACILITIES

1050 NEROLY RD
OAKLEY, CA 94561

LIBERTY UNION HIGH SCHOOL DISTRICT

ARCH PROJECT NO:	1739.00
DRAWN BY:	Author
DRAWING SCALE:	1/8" = 1'-0"
PTN:	61721-0068

BID SET

AUGUST 13, 2019

SHEET TITLE

CTE BUILDING MECHANICAL PLAN

SHEET NUMBER

M-B2.1

8/6/2019 9:55:10 AM C:\Users\robart\Documents\18036 Freedom HS PAC rvt15_robert.rvt

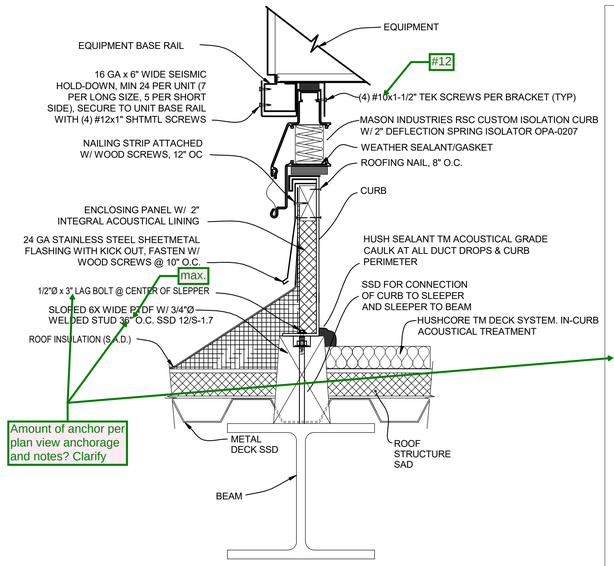

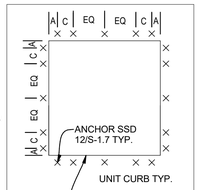

PLAN VIEW ANCHORAGE

NOTE:

1. A =2", C=6", EQ=16" MAX SSD, TYP.
2. AC-1, AC-2
   - (4) EACH CORNER
   - (2) ADDITIONAL PER SHORT SIDE EQ SPACED
   - (4) ADDITIONAL PER LONG SIDE EQ SPACED
3. AC-3
   - (6) EACH CORNER (ADD C DIM)
   - (2) ADDITIONAL PER SHORT SIDE EQ SPACED
   - (4) ADDITIONAL PER LONG SIDE EQ SPACED
4. AC-4,AC-6,AC-7,AC-8
   - (4) EACH CORNER
   - (1) ADDITIONAL PER SHORT SIDE EQ SPACED
   - (2) ADDITIONAL PER LONG SIDE EQ SPACED
5. AC-5
   - (4) EACH CORNER
   - (1) ADDITIONAL PER SHORT SIDE EQ SPACED
   - (3) ADDITIONAL PER LONG SIDE EQ SPACED
6. AC-9
   - (6) EACH CORNER (ADD C DIM)
   - (1) ADDITIONAL PER SHORT SIDE EQ SPACED
   - (4) ADDITIONAL PER LONG SIDE EQ SPACED

A AC MOUNTING DETAIL

SCALE: NONE

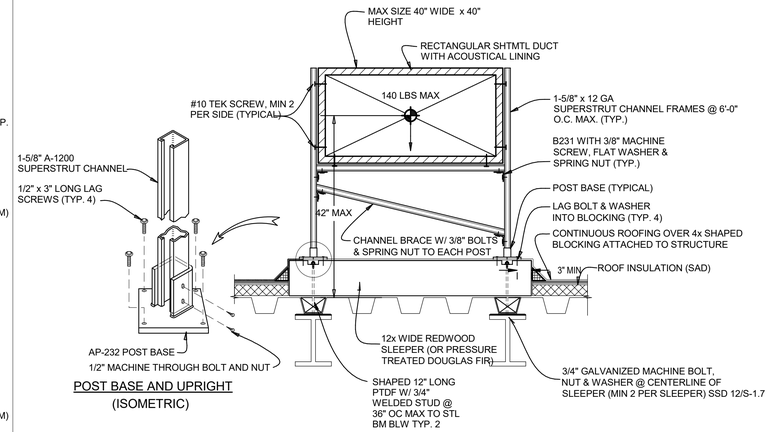

POST BASE AND UPRIGHT

(ISOMETRIC)

B DUCT ON ROOF MOUNTING DETAIL

SCALE: NONE

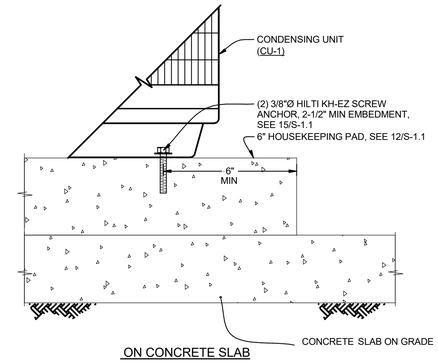

ON CONCRETE SLAB

C CONDENSING MOUNTING DETAIL

SCALE: NONE

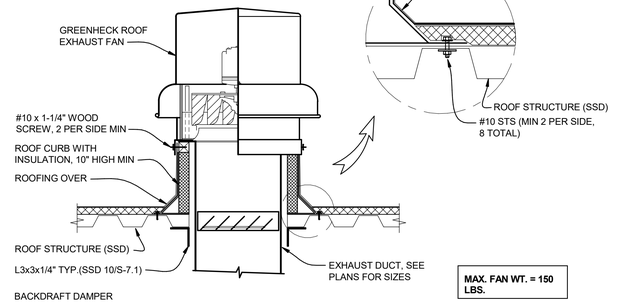

NOTE:

1. ALL FASTENERS EXPOSED TO WEATHER SHALL BE SEALED WITH A SINGLE COMPONENT, POLYURETHANE SEALANT.
2. GREASE FAN, SIMILAR, W/O BACKDRAFT DAMPER, VENTED CURB, UPBLAST W/ GREASE COLLECTION CUP.

D ROOFTOP EXHAUST FAN MOUNTING DETAILS

SCALE: NONE

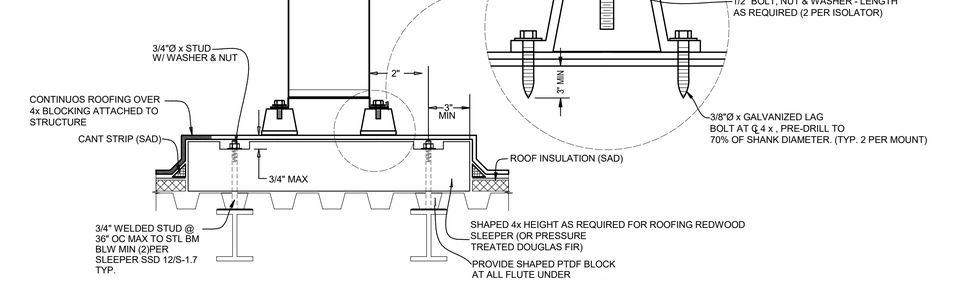

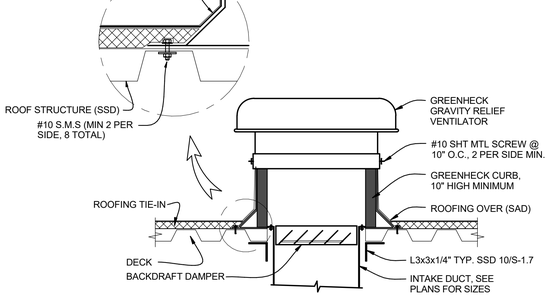

F ROOFTOP GRAVITY RELIEF - METAL DECK

SCALE: NONE

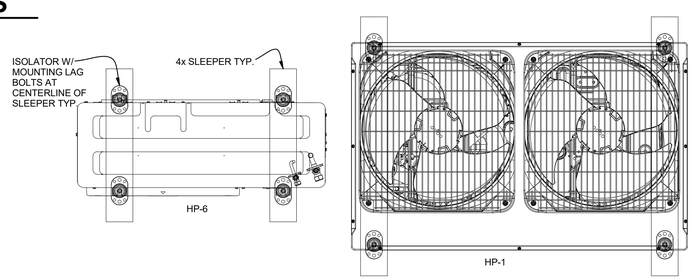

PLAN VIEW

E HEAT PUMP MOUNTING DETAIL

SCALE: NONE

QUATTROCCHI KWOK ARCHITECTS
Main Office:
636 Fifth Street, Santa Rosa, CA 95404
Pleasanton Office:
600 Main Street, Suite E,
Pleasanton, CA 94566
(707) 576-0829

COSTA ENGINEERS INC.
3274 Villa Lane Napa, CA 94558 ph: 707.252.9177 fax: 707-252-9473

REGISTERED PROFESSIONAL ENGINEER
CHRISTOPHER J. POE LOPEZ
NO. 31500
Exp. 12-31-20
MECHANICAL
STATE OF CALIFORNIA

FREEDOM HIGH SCHOOL

PERFORMING ARTS AND CTE FACILITIES

1050 NEROLY RD
OAKLEY, CA 94561

LIBERTY UNION HIGH SCHOOL DISTRICT

ARCH PROJECT NO: 1739.00
DRAWN BY: Author
DRAWING SCALE:
PTN: 61721-0068

BID SET

AUGUST 13, 2019

SHEET TITLE

MECHANICAL DETAILS

SHEET NUMBER

M4.1

7/17/2019 6:04:57 PM C:\Users\mquevedo\Documents\18036 Freedom HS PAC rvt16_mquevedo@costaengineers.com.rvt

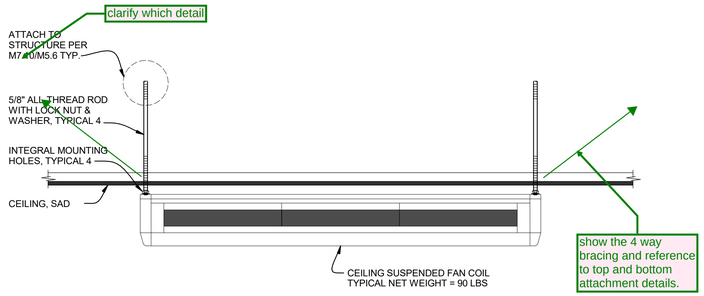

A CEILING-SUSPENDED FAN COIL DETAIL

SCALE: NONE

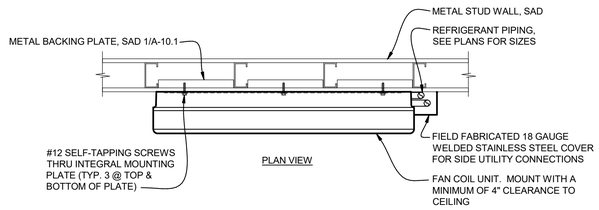

B WALL MOUNTED FAN COIL ON METAL STUD

SCALE: NONE

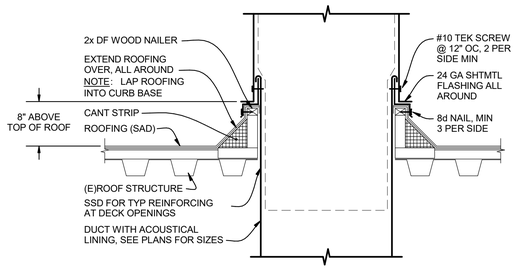

@ METAL DECK ROOF

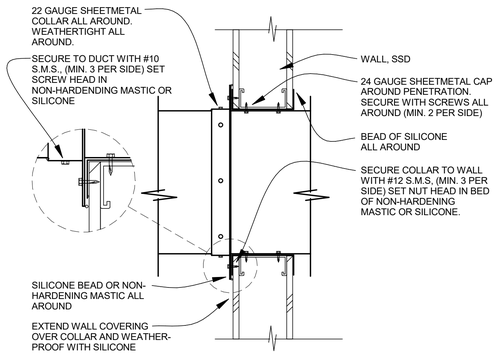

@ WALL

C NOT USED

SCALE: NONE

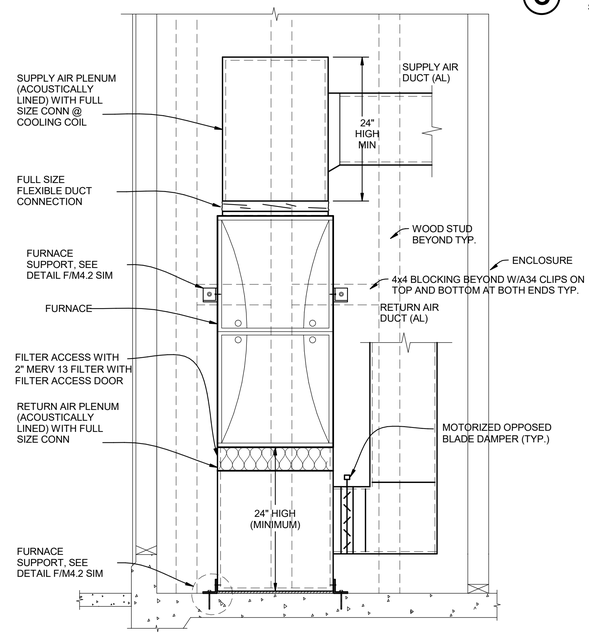

D DUCT PENETRATION DETAILS

SCALE: NONE

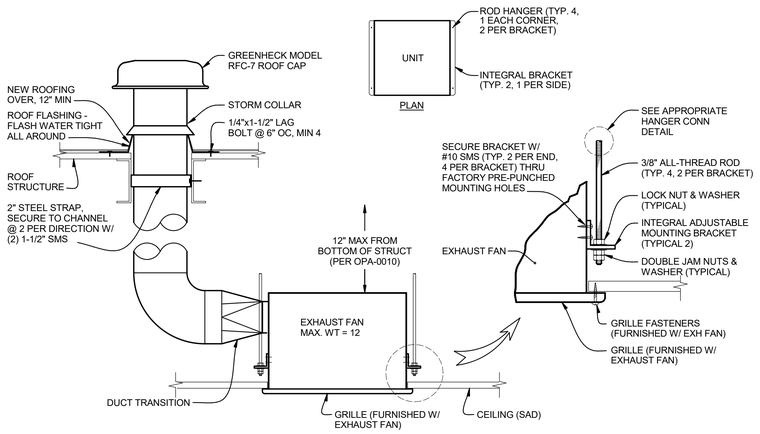

E FURNACE CLOSET MOUNTING DETAIL

SCALE: NTS

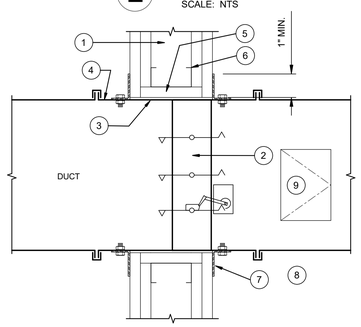

1. FIRE RATED INFILL (SEE ARCH.)
2. COMBINATION FIRE/SMOKE DAMPER.
3. WELD OR BOLT FIRE DAMPER TO SLEEVE.
4. 14 GAGE SLEEVE
5. 5/8" GYPSUM BOARD LINER ALL AROUND.
6. METAL STUD
7. MOUNTING ANGLE, 1-1/2 x 1-1/2 x 14 GAGE MIN.
8. BREAK AWAY CONNECTION.
9. ACCESS DOOR
10. INSTALL IN ACCORDANCE WITH MANUFACTURER'S INSTALLATION INSTRUCTIONS.

F FURNACE SUPPORTS

SCALE: NONE

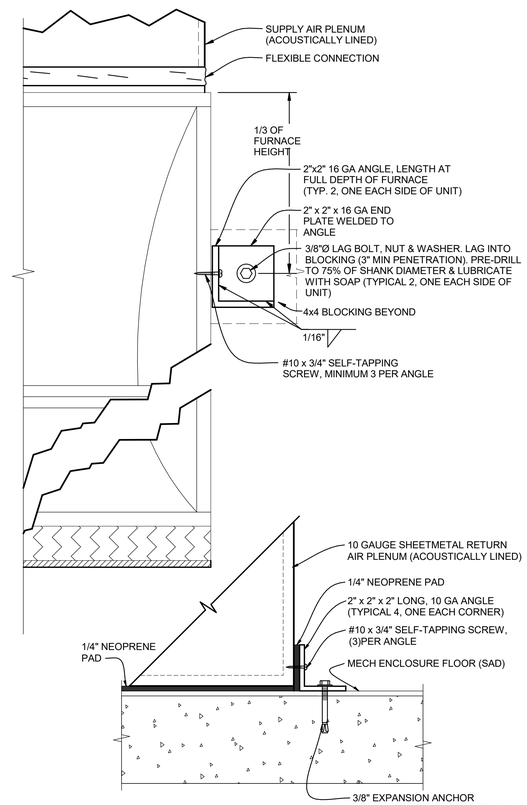

G CEILING EXHAUST FAN MOUNTING DETAIL

SCALE: NONE

H FIRE/SMOKE DAMPER DETAIL

SCALE: NONE

QUATTROCCHI KWOK ARCHITECTS
Main Office:
636 Fifth Street, Santa Rosa, CA 95404
Pleasanton Office:
600 Main Street, Suite E,
Pleasanton, CA 94566
(707) 576-0829

COSTA ENGINEERS INC.
3274 Villa Lane Napa, CA 94558 ph: 707-252-9177 fax: 707-252-9473
REGISTERED PROFESSIONAL ENGINEER CHRISTOPHER J. COSTA NO. 31500 Exp. 12-31-20 MECHANICAL STATE OF CALIFORNIA

FREEDOM HIGH SCHOOL

PERFORMING ARTS AND CTE FACILITIES

1050 NEROLY RD
OAKLEY, CA 94561

LIBERTY UNION HIGH SCHOOL DISTRICT

ARCH PROJECT NO:	1739.00
DRAWN BY:	Author
DRAWING SCALE:	
PTN:	61721-0068

BID SET

AUGUST 13, 2019

SHEET TITLE

MECHANICAL DETAILS

SHEET NUMBER

M4.2

7/17/2019 6:04:57 PM C:\Users\mquevedo\Documents\18036 Freedom HS PAC rvt16_mquevedo@costaengineers.com.rvt

NOTES:

1. RUN PIPING TRAPEZE AS CLOSE AS POSSIBLE TO STRUCTURE.
2. SUPPORT PIPING AT A MAXIMUM OF 8'-0" INTERVALS.
3. SEE PLANS FOR PIPE SIZES.
4. CHANNEL DEFLECTION SHALL NOT EXCEED 1/360 OF THE SPAN BETWEEN RODS. DOUBLE-UP CHANNELS AS REQUIRED.
5. NO BRACING IS REQUIRED ON GAS PIPES WITH LESS THAN 1" I.D., ALL OTHER PIPES LESS THAN 2-1/2" IN DIAMETER, AND WHEN SUPPORTED LESS THAN 12" FROM BOTTOM OF BLDG STRUCTURE.

TRAPEZE LOAD & SUPPORT CONDITIONS:

PIPING TRAPEZE FOR REFRIGERANT PIPING, MAX NOMINAL OD 1-1/8" PIPING, MAX (4) PIPES PER TRAPEZE @ 8' ON CENTER, MAX LOAD EACH 15#'S ATTACH ATR TO BEAMS PER M3.14/M5.6 TYP.

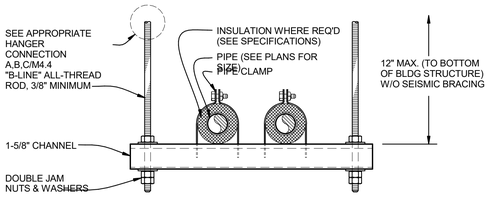

MINIMUM ROD SIZES (INCHES)	PIPE DIAMETER (INCHES)
3/8"	2" & SMALLER PIPE
1/2"	2-1/2" & 3" PIPE

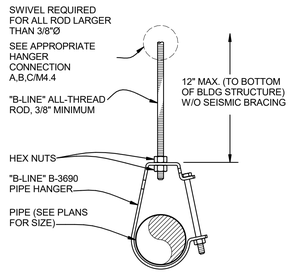

A TYPICAL PIPE HANGER DETAILS

SCALE: NONE

NOTES:

1. RUN PIPING TRAPEZE AS CLOSE AS POSSIBLE TO STRUCTURE.
2. SUPPORT PIPING AT A MAXIMUM OF 8'-0" INTERVALS.
3. SEE PLANS FOR PIPE SIZES.
4. CHANNEL DEFLECTION SHALL NOT EXCEED 1/360 OF THE SPAN BETWEEN RODS. DOUBLE-UP CHANNELS AS REQUIRED.
5. PROVIDE "B-LINE" CHANNEL ROD STIFFENER @ ALL-THREAD WHERE DIAGONAL BRACE OCCURS. INCLUDE SC228 ASSEMBLY AS RECOMMENDED BY MANUFACTURER.
6. NO BRACING IS REQUIRED ON GAS PIPES WITH LESS THAN 1" I.D., AND ALL OTHER PIPES LESS THAN 2-1/2" IN DIAMETER.

TRAPEZE LOAD & SUPPORT CONDITIONS:

PIPING TRAPEZE FOR REFRIGERANT PIPING, MAX NOMINAL OD 1-1/8" PIPING, MAX (4) PIPES PER TRAPEZE @ 8' ON CENTER, MAX LOAD EACH 15#'S ATTACH ATR TO BEAMS PER M3.14/M5.6 TYP ATTACH BRACING AS NOTED..

TABLE-1	
ANGLE (INCHES)	MAX LENGTH (INCHES)
1-1/2 x 1-1/2 x 1/8	3'-0"
2 x 2 x 3/16	6'-0"
3 x 3 x 1/4	8'-0"

MINIMUM ROD SIZES (INCHES)	PIPE DIAMETER (INCHES)
3/8"	2" & SMALLER PIPE
1/2"	2-1/2" & 3" PIPE
5/8"	4" PIPE

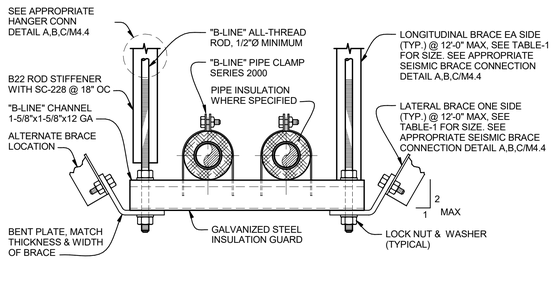

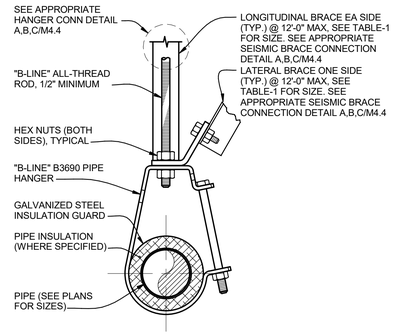

B TYPICAL PIPE HANGER W/ SEISMIC BRACING DETAILS

SCALE: NONE

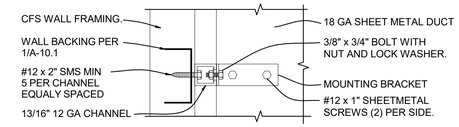

CONDITION AT C.F.S WALL

RECTANGULAR DUCT (EXPOSED/CONCEALED)
(32" WIDE AND LARGER) USE DETAIL D4.10/M5.6

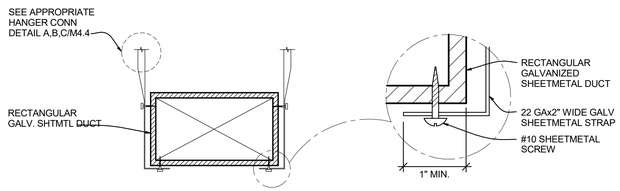

RECTANGULAR DUCT (EXPOSED/CONCEALED)
(31" WIDE AND SMALLER)

ROUND DUCT (EXPOSED/CONCEALED)
(18" AND LARGER) USE DETAIL D6.10/M5.6

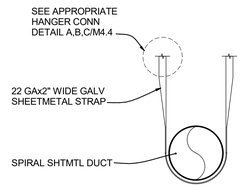

ROUND DUCT (EXPOSED/CONCEALED)
(16"□ AND SMALLER)

DUCT SUPPORT NOTES:

A. ALL STRAPS, RODS, TRAPEZE ANGLES AND TRAPEZE CHANNELS SHALL BE SIZED AND INSTALLED IN ACCORDANCE WITH THE LATEST SMACNA REQUIREMENTS.

B. ALL BOLTS, NUTS, SCREWS AND OTHER FASTENING DEVICES SHALL BE LOAD-RATED AND SHALL MEET ALL CODE REQUIREMENTS AND SAFETY FACTORS WHICH APPLY.

C. WIRE, USED IN LIEU OF STRAPS AND RODS, IS NOT ALLOWED .

D. WHERE APPLICABLE, INSTALL INSULATION AFTER INSTALLING DUCT HANGERS.

E. LATERAL BRACING REQUIRED ON 32" WIDE AND LARGER RECTANGULAR DUCTS, AND ON 18" DIAMETER AND LARGER ROUND DUCTS.

F. SUPPORTS SHALL BE PLACED AT 8'-0" ON CENTER (MAX) AND AT ALL CHANGES IN DIRECTION.

C TYPICAL DUCT HANGER DETAILS - ALSO SEE M5.6 DUCT HANGER DETAILS

SCALE: NONE

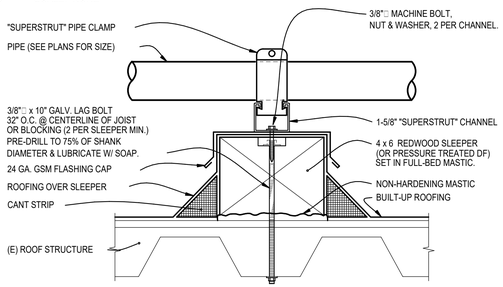

NOTE: SUPPORTS SHALL BE PLACED 8'-0" ON CENTER (MAX.) AND AT ALL CHANGES IN DIRECTION.

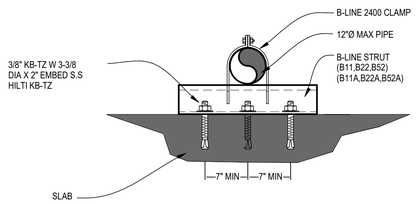

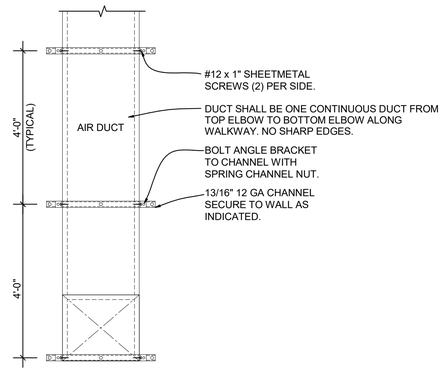

D EXPOSED DUCT UP WALL

SCALE: NONE

E PIPE SUPPORT ON ROOF DETAIL

SCALE: NONE

F PIPE ON GRADE

SCALE: NONE

QUATTROCCHI KWOK ARCHITECTS
Main Office:
636 Fifth Street, Santa Rosa, CA 95404
Pleasanton Office:
600 Main Street, Suite E,
Pleasanton, CA 94566
(707) 576-0829

COSTA ENGINEERS INC.
3274 Villa Lane Napa, CA 94558 ph: 707.252.9177 fax: 707-252-0473

REGISTERED PROFESSIONAL ENGINEER
CHRISTOPHER J. POE LOPEZ
NO. 31500
Exp. 12-31-20
MECHANICAL
STATE OF CALIFORNIA

FREEDOM HIGH SCHOOL

PERFORMING ARTS AND CTE FACILITIES

1050 NEROLY RD
OAKLEY, CA 94561

LIBERTY UNION HIGH SCHOOL DISTRICT

ARCH PROJECT NO:	1739.00
DRAWN BY:	Author
DRAWING SCALE:	
PTN:	61721-0068

BID SET

AUGUST 13, 2019

SHEET TITLE

MECHANICAL DETAILS

SHEET NUMBER

M4.3

7/17/2019 6:04:58 PM C:\Users\mqueveda\Documents\18036 Freedom HS PAC rvt16_mqueveda@costaengineers.com.rvt

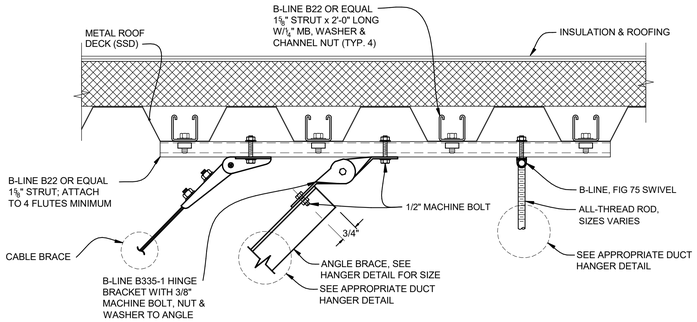

NOTE: MAXIMUM (2) ATTACHMENTS PER STRUT, MIN DISTANCE BETWEEN ATTACHMENTS 12" TYP.

A SEISMIC BRACE & HANGER TO DECK

SCALE: NTS

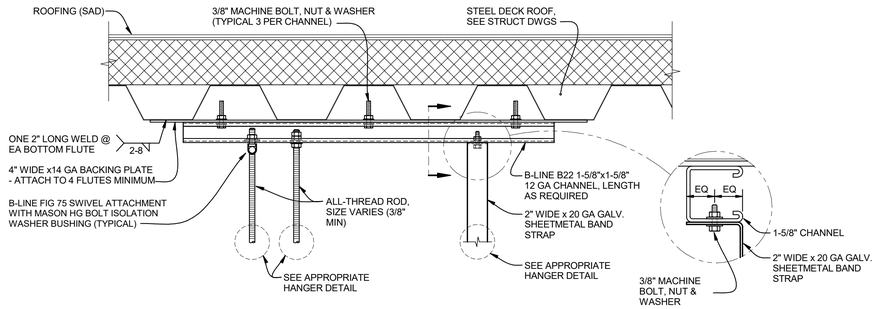

NOTE: MAXIMUM (2) ATTACHMENTS PER STRUT, MIN DISTANCE BETWEEN ATTACHMENTS 12" TYP.

B TYPICAL PIPE / DUCT HANGER CONNECTION DETAILS @ METAL DECK

SCALE: NONE

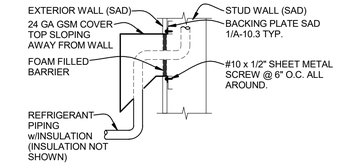

H RS/RL PIPING THRU WALL

SCALE: NONE

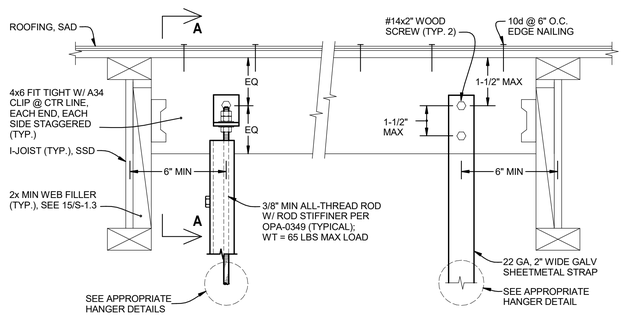

VERTICAL HANGER CONNECTION TO BLK'G OR I-JOIST

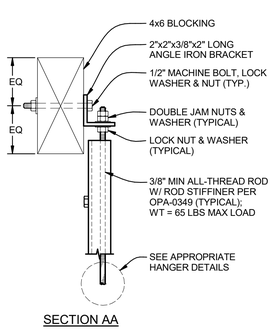

SECTION AA

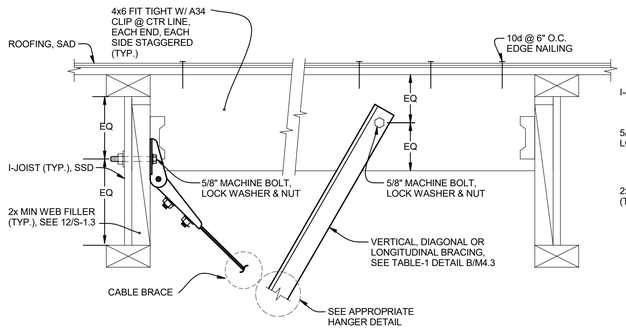

DIAGONAL BRACING PERPENDICULAR W/ I-JOIST

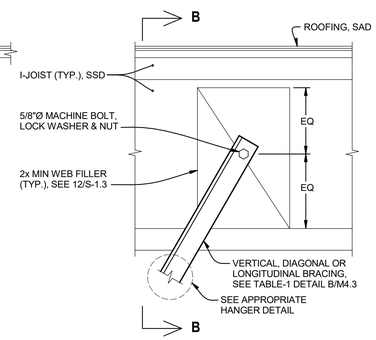

DIAGONAL BRACING PARALLEL W/ I-JOIST

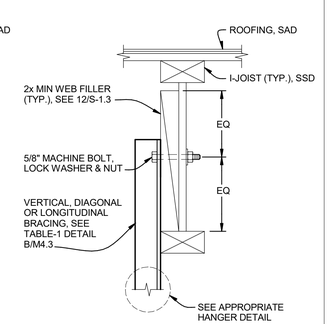

SECTION BB

C TYPICAL HANGER CONNECTION DETAILS @ I-JOIST

SCALE: NONE

NOT USED

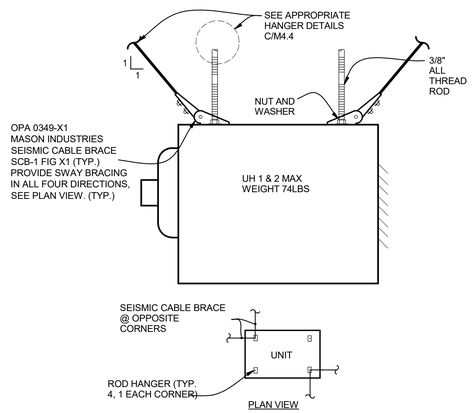

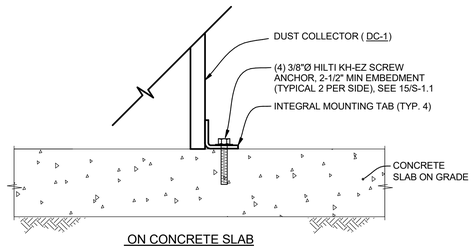

ON CONCRETE SLAB

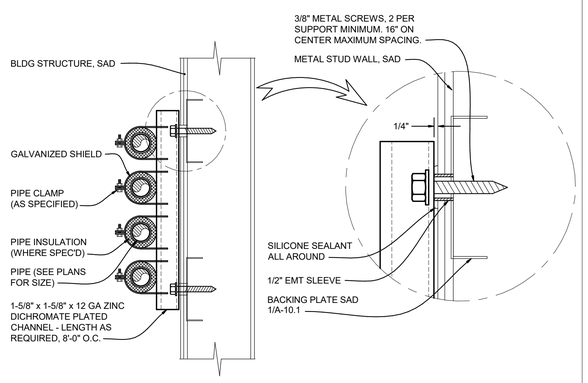

@ METAL STUD WALL

D

SCALE: NONE

E UNIT HEATER MOUNTING DETAIL

SCALE: NONE

F DUST COLLECTOR MOUNTING DETAIL

SCALE: NONE

G PIPE SUPPORT DETAIL ON WALL

SCALE: NONE

QUATTROCCHI KWOK ARCHITECTS
Main Office:
636 Fifth Street, Santa Rosa, CA 95404
Pleasanton Office:
600 Main Street, Suite E,
Pleasanton, CA 94566
(707) 576-0829

COSTA ENGINEERS INC.
3274 Villa Lane Napa, CA 94558 ph: 707.252.9177 fax: 707.252.0473

REGISTERED PROFESSIONAL ENGINEER
CHRISTOPHER J. POE LOPEZ
NO. 31500
Exp. 12-31-20
MECHANICAL
STATE OF CALIFORNIA

FREEDOM HIGH SCHOOL

PERFORMING ARTS AND CTE FACILITIES

1050 NEROLY RD
OAKLEY, CA 94561

LIBERTY UNION HIGH SCHOOL DISTRICT

ARCH PROJECT NO:	1739.00
DRAWN BY:	Author
DRAWING SCALE:	
PTN:	61721-0068

BID SET

AUGUST 13, 2019

SHEET TITLE

MECHANICAL DETAILS

SHEET NUMBER

M4.4

7/17/2019 6:04:58 PM C:\Users\mquevedo\Documents\19036 Freedom HS PAC rvt16_mquevedo@costaengineers.com.rvt

Packaged AC Unit with 2-Speed Fan, Economizer, Demand Control Ventilation, Zone Occupancy Monitoring

1. System Overview

a. Each AC unit will be directly controlled by its own dedicated EMS (Energy Management System) unitary controller.
b. EMS unitary controller will be connected to a wall mounted electronic zone temperature sensor with integral relative humidity sensor and CO2 sensor.
c. Electronic zone temperature sensor shall have a touch screen LCD interface which includes: 1) digital pushbuttons for warmer/cooler setpoint control; 2) visual display of room temperature, room humidity, room CO2 and ambient OSA temperature; and 3) digital pushbutton after-hours override timer control, with user adjustable duration. The after-hours override duration shall have the ability to be limited from the front-end.

2. Occupancy/Vacancy Monitoring

a. Zone occupancy and vacancy will be actively monitored by connection to Lighting Control System occupancy sensor(s). If available, monitoring shall be accomplished via BACnet system integration. Otherwise, BAS contractor shall monitor auxiliary contacts on Lighting Control System occupancy sensor(s).

3. Unit Fan Operation

a. When the zone is in Occupied Mode or in Afterhours Mode, the fan shall run continuously, unless Vacant Mode has been triggered.
b. Low speed and high speed fan operation to be controlled by AC Unit Manufacturer's internal controls independent of EMS based upon call for heating, cooling or ventilation.
c. During the Unoccupied Mode as determined by EMS time schedule, the unit fan cycles with demand and the temperature is controlled by the unoccupied space temperature heating and cooling setpoints.

4. Minimum Outdoor Air Ventilation

a. During Occupied Mode or Afterhours Mode, the economizer damper shall be commanded by the EMS unitary controller to maintain a position which satisfies the Minimum Outdoor Air ventilation requirements for the zone. Damper position(s) determined by Air Balancing Contractor.

5. Demand Control Ventilation

a. EMS unitary controller will be connected to a wall mounted CO2 sensor to monitor zone CO2 concentration.
b. During Occupied Mode or Afterhours Mode, the EMS unitary controller shall reset the outside air damper minimum position to maintain the CO2 concentration below 1,000 ppm.

6. Automatic Demand Reduction Controls

a. EMS shall be programmed with capability to implement centralized demand shed for all non-critical zones upon call for Automatic Demand Reduction. Critical zones shall not be impacted by demand shed conservation measures.

7. Vacant Mode Control

a. When the zone has been scheduled for occupancy for at least one hour and the occupancy sensor has confirmed that zone has been vacant for 5 minutes (adjustable: maximum 30 minutes), zone shall be placed into Vacant Mode.
b. Reset cooling and heating setpoints up and down by 2°F (adjustable) or more.
c. Minimum Outdoor Air ventilation requirements in the zone need only be maintained 15 minutes out of every 60 minutes while the zone is in Vacant Mode.
d. Upon detection of occupancy, Vacant Mode shall be cleared.

8. Zone Pre-Occupancy Purge

a. The EMS shall schedule the zone to be in Occupied Mode one hour prior to the actual time of anticipated occupancy.

9. Heating operation

a. The controller compares the heating setpoint with the space temperature and determines a need-heating control signal to stage a gas regulating valve on the unit.
b. Economizer to be commanded to Min CFM setpoint and mechanical cooling to be locked out during heating mode.

10. Cooling operation

a. The controller compares the cooling setpoint with the space temperature and determines a need-cooling signal.
b. The first stage of cooling will enable the economizer to provide free cooling for as long as possible.
c. The second stage will enable the compressor(s) to maintain the room set point.
d. Mechanical heating to be locked out during cooling mode.

11. Smoke Detector

a. When particles of combustion are detected in the supply air stream by the AC Unit smoke detector, the AC Unit shall shut down via hardwire interlock.

13. Fault Detection Diagnostics

a. The EMS DDC Controller shall monitor the following economizer actuator Fault Detection Diagnostic conditions and broadcast results via EMS network:
i. Temperature Sensor Failure/Fault
ii. Economizer not economizing when enabled
iii. Economizer economizing when disabled
iv. Economizer damper modulation failure
v. Excess outdoor air

14. Monitoring - The following conditions shall be monitored and displayed at EMS Operator Workstation/Graphical User Interface:

a. Supply air temperature.
b. Room temperature.
c. Room CO2 concentration.
d. Room occupancy status.
e. Current mode (heating/cooling/fan).
f. Supply air temperature attained last time unit was in heating.
g. Supply air temperature attained last time unit was in cooling.
h. Current command status of fan, economizer, compressor and gas valve.
i. Run time meters on fan, compressor, and heat.
j. Economizer actuator feedback status.

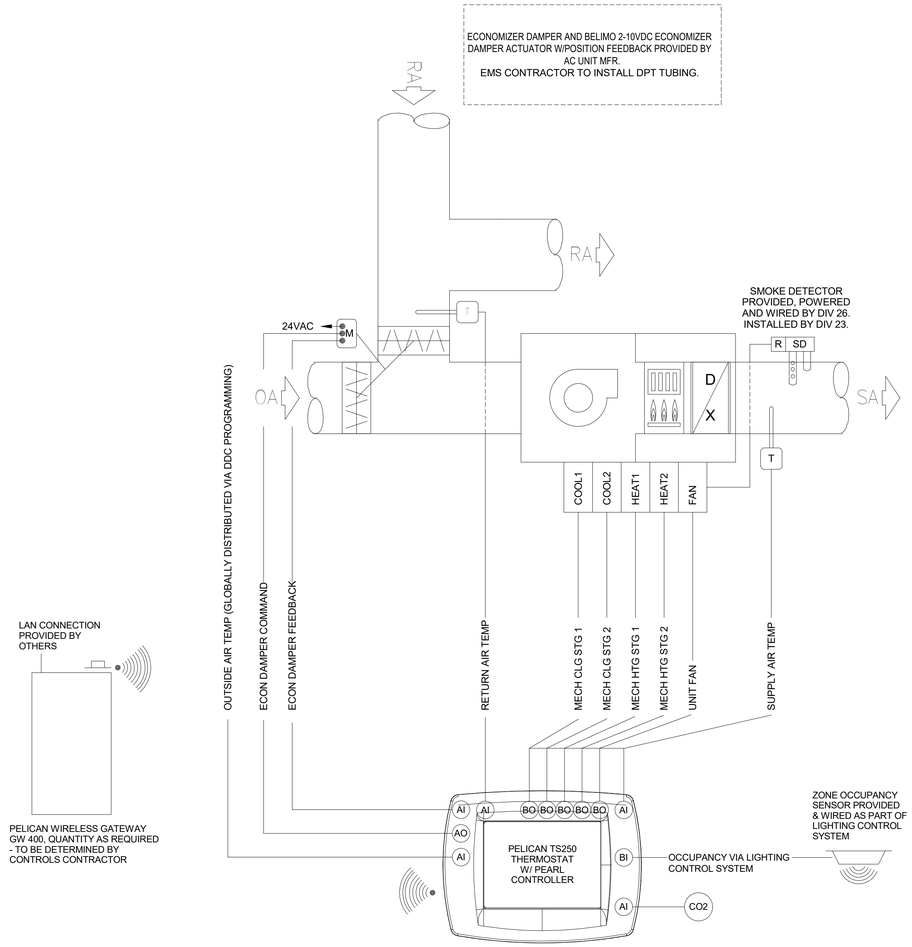

A PACKAGE AC UNIT w/2-SPEED FAN, DEMAND CONTROL VENTILATION & OCCUPANCY MONITORING

SCALE: NONE

TYPICAL; RTU 1,2,&3

QUATTROCCHI KWOK ARCHITECTS
Main Office:
636 Fifth Street, Santa Rosa, CA 95404
Pleasanton Office:
600 Main Street, Suite E,
Pleasanton, CA 94566
(707) 576-0829

COSTA ENGINEERS INC.
3274 Villa Lane Napa, CA 94558 ph: 707.252.9177 fax: 707-252-0473

REGISTERED PROFESSIONAL ENGINEER
CHRISTOPHER J. POE LOCHE
NO. 31500
Exp. 12-31-20
MECHANICAL
STATE OF CALIFORNIA

FREEDOM HIGH SCHOOL

PERFORMING ARTS AND CTE FACILITIES

1050 NEROLY RD
OAKLEY, CA 94561

LIBERTY UNION HIGH SCHOOL DISTRICT

ARCH PROJECT NO:	1739.00
DRAWN BY:	Author
DRAWING SCALE:	
PTN:	61721-0068

BID SET

AUGUST 13, 2019

SHEET TITLE

MECHANICAL CONTROLS

SHEET NUMBER

M5.1

7/17/2019 6:04:58 PM C:\Users\mqueveda\Documents\18036 Freedom HS PAC rvt16_mqueveda@costaengineers.com.rvt

Packaged AC Unit with 2-Speed Fan, Economizer, Demand Control Ventilation, Zone Occupancy Monitoring

1. System Overview

a. Each AC unit will be directly controlled by its own dedicated EMS (Energy Management System) unitary controller.
b. EMS unitary controller will be connected to a wall mounted electronic zone temperature sensor with integral relative humidity sensor and CO2 sensor.
c. Electronic zone temperature sensor shall have a touch screen LCD interface which includes: 1) digital pushbuttons for warmer/cooler setpoint control; 2) visual display of room temperature, room humidity, room CO2 and ambient OSA temperature; and 3) digital pushbutton after-hours override timer control, with user adjustable duration. The after-hours override duration shall have the ability to be limited from the front-end.

2. Occupancy/Vacancy Monitoring

a. Zone occupancy and vacancy will be actively monitored by connection to Lighting Control System occupancy sensor(s). If available, monitoring shall be accomplished via BACnet system integration. Otherwise, BAS contractor shall monitor auxiliary contacts on Lighting Control System occupancy sensor(s).

3. Unit Fan Operation

a. When the zone is in Occupied Mode or in Afterhours Mode, the fan shall run continuously, unless Vacant Mode has been triggered.
b. Low speed and high speed fan operation to be controlled by AC Unit Manufacturer's internal controls independent of EMS based upon call for heating, cooling or ventilation.
c. During the Unoccupied Mode as determined by EMS time schedule, the unit fan cycles with demand and the temperature is controlled by the unoccupied space temperature heating and cooling setpoints.

4. Minimum Outdoor Air Ventilation

a. During Occupied Mode or Afterhours Mode, the economizer damper shall be commanded by the EMS unitary controller to maintain a position which satisfies the Minimum Outdoor Air ventilation requirements for the zone. Damper position(s) determined by Air Balancing Contractor.

5. Demand Control Ventilation

a. EMS unitary controller will be connected to a wall mounted CO2 sensor to monitor zone CO2 concentration.
b. During Occupied Mode or Afterhours Mode, the EMS unitary controller shall reset the outside air damper minimum position to maintain the CO2 concentration below 1,000 ppm.

6. Automatic Demand Reduction Controls

a. EMS shall be programmed with capability to implement centralized demand shed for all non-critical zones upon call for Automatic Demand Reduction. Critical zones shall not be impacted by demand shed conservation measures.

7. Vacant Mode Control

a. When the zone has been scheduled for occupancy for at least one hour and the occupancy sensor has confirmed that zone has been vacant for 5 minutes (adjustable: maximum 30 minutes), zone shall be placed into Vacant Mode.
b. Reset cooling and heating setpoints up and down by 2°F (adjustable) or more.
c. Minimum Outdoor Air ventilation requirements in the zone need only be maintained 15 minutes out of every 60 minutes while the zone is in Vacant Mode.
d. Upon detection of occupancy, Vacant Mode shall be cleared.

8. Zone Pre-Occupancy Purge

a. The EMS shall schedule the zone to be in Occupied Mode one hour prior to the actual time of anticipated occupancy.

9. Heating operation

a. The controller compares the heating setpoint with the space temperature and determines a need-heating control signal to stage a gas regulating valve on the unit, where applicable.
b. Economizer to be commanded to Min CFM setpoint and mechanical cooling to be locked out during heating mode.

10. Cooling operation

a. The controller compares the cooling setpoint with the space temperature and determines a need-cooling signal.
b. The first stage of cooling will enable the economizer to provide free cooling for as long as possible.
c. The second stage will enable the compressor(s) to maintain the room set point.
d. Mechanical heating to be locked out during cooling mode.

11. Fault Detection Diagnostics

a. The EMS DDC Controller shall monitor the following economizer actuator Fault Detection Diagnostic conditions and broadcast results via EMS network:
i. Temperature Sensor Failure/Fault
ii. Economizer not economizing when enabled
iii. Economizer economizing when disabled
iv. Economizer damper modulation failure
v. Excess outdoor air

14. Monitoring - The following conditions shall be monitored and displayed at EMS Operator Workstation/Graphical User Interface:

a. Supply air temperature.
b. Room temperature.
c. Room CO2 concentration.
d. Room occupancy status.
e. Current mode (heating/cooling/fan).
f. Supply air temperature attained last time unit was in heating.
g. Supply air temperature attained last time unit was in cooling.
h. Current command status of fan, economizer, compressor and gas valve.
i. Run time meters on fan, compressor, and heat.
j. Economizer actuator feedback status.

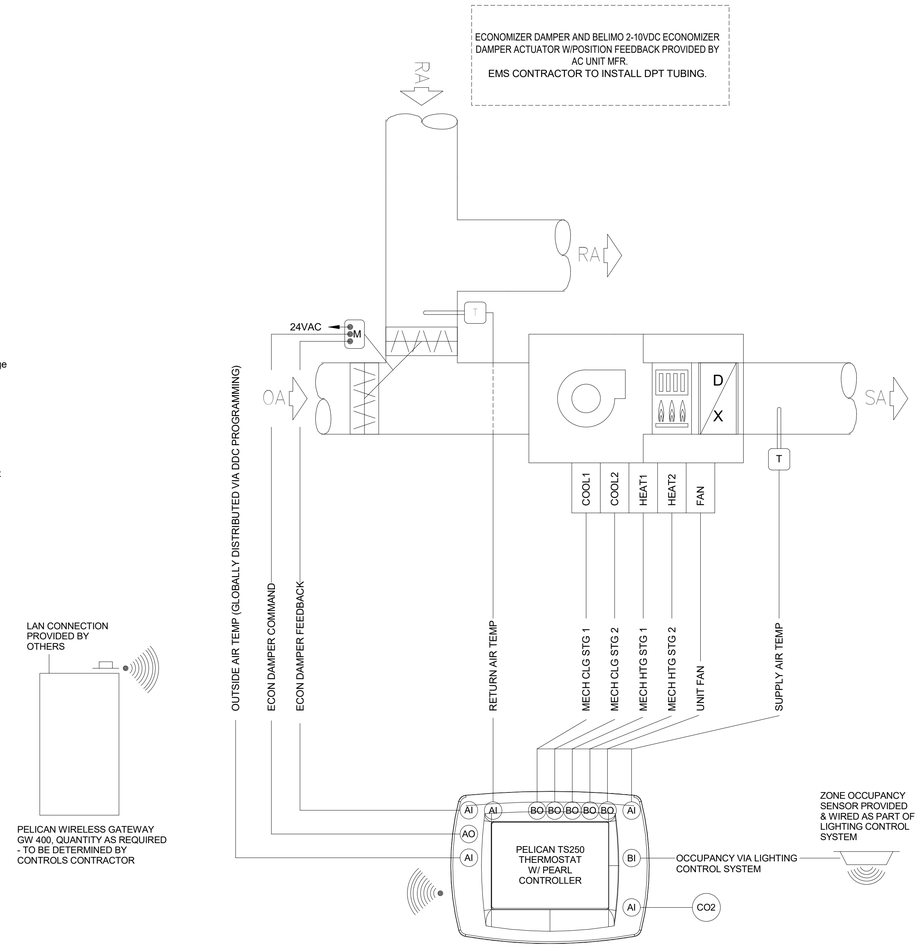

A PACKAGE AC UNIT w/2-SPEED FAN, DEMAND CONTROL VENTILATION & OCCUPANCY MONITORING

SCALE: NONE

TYPICAL; RTU 4,5,&9

QUATTROCCHI KWOK ARCHITECTS
Main Office:
636 Fifth Street, Santa Rosa, CA 95404
Pleasanton Office:
600 Main Street, Suite E,
Pleasanton, CA 94566
(707) 576-0829

COSTA ENGINEERS INC.
3274 Villa Lane Napa, CA 94558 ph: 707.252.9177 fax: 707.252.0473
REGISTERED PROFESSIONAL ENGINEER CHRISTOPHER J. POE LICOSH NO. 31500 Exp. 12-31-20 MECHANICAL STATE OF CALIFORNIA

FREEDOM HIGH SCHOOL

PERFORMING ARTS AND CTE FACILITIES

1050 NEROLY RD
OAKLEY, CA 94561

LIBERTY UNION HIGH SCHOOL DISTRICT

ARCH PROJECT NO: 1739.00
DRAWN BY: Author
DRAWING SCALE:
PTN: 61721-0068

BID SET

AUGUST 13, 2019

SHEET TITLE

MECHANICAL CONTROLS

SHEET NUMBER

M5.2

7/17/2019 6:04:58 PM C:\Users\mquevedo\Documents\18036 Freedom HS PAC rvt16_mquevedo@costaengineers.com.rvt

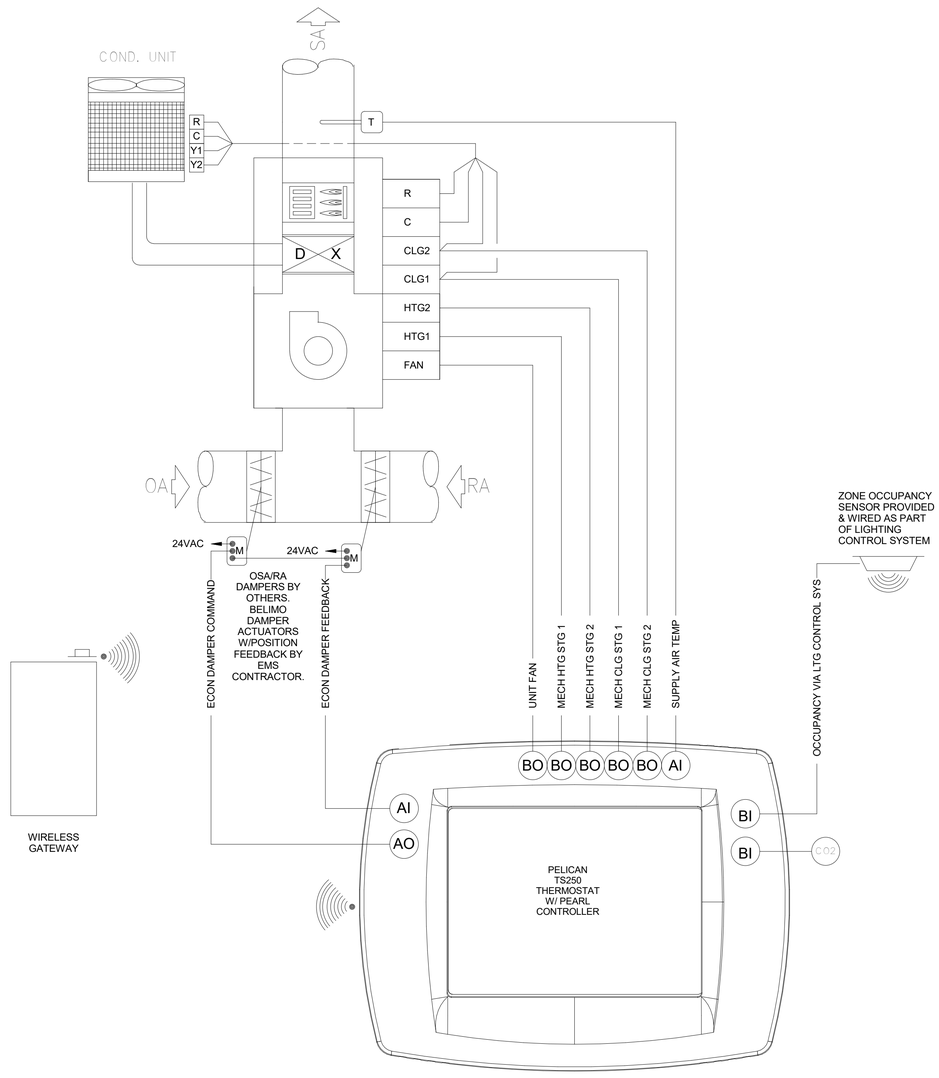

A FURNACE UNIT w/2-STAGE HTG, DEMAND CONTROL VENTILATION & OCCUPANCY MONITORING

SCALE: NONE

TYPICAL; RTU 4,5,&9

Furnace/Condensing Unit Split System with Economizer, Demand Control Ventilation, Zone Occupancy Monitoring

1. System Overview

a. Each FRN/CU unit will be directly controlled by its own dedicated EMS (Energy Management System) unitary controller.
b. EMS unitary controller will be connected to a wall mounted electronic zone temperature sensor with integral relative humidity sensor and CO2 sensor.
c. Electronic zone temperature sensor shall have a touch screen LCD interface which includes: 1) digital pushbuttons for warmer/cooler setpoint control; 2) visual display of room temperature, room humidity, room CO2 and ambient OSA temperature; and 3) digital pushbutton after-hours override timer control, with user adjustable duration. The after-hours override duration shall have the ability to be limited from the front-end.

2. Occupancy/Vacancy Monitoring

a. Zone occupancy and vacancy will be actively monitored by connection to Lighting Control System occupancy sensor(s). If available, monitoring shall be accomplished via BACnet system integration. Otherwise, BAS contractor shall monitor auxiliary contacts on Lighting Control System occupancy sensor(s).

3. Unit Fan Operation

a. When the zone is in Occupied Mode or in Afterhours Mode, the fan shall run continuously, unless Vacant Mode has been triggered.
b. During the Unoccupied Mode as determined by EMS time schedule, the unit fan cycles with demand and the temperature is controlled by the unoccupied space temperature heating and cooling setpoints.

4. Minimum Outdoor Air Ventilation

a. During Occupied Mode or Afterhours Mode, the economizer damper shall be commanded by the EMS unitary controller to maintain a position which satisfies the Minimum Outdoor Air ventilation requirements for the zoneDamper position(s) determined by Air Balancing Contractor.

5. Demand Control Ventilation

a. EMS unitary controller will be connected to a wall mounted CO2 sensor to monitor zone CO2 concentration.
b. During Occupied Mode or Afterhours Mode, the EMS unitary controller shall reset the outside air damper minimum position to maintain the CO2 concentration below 1,000 ppm.

6. Automatic Demand Reduction Controls

a. EMS shall be programmed with capability to implement centralized demand shed for all non-critical zones upon call for Automatic Demand Reduction. Critical zones shall not be impacted by demand shed conservation measures.

7. Vacant Mode Control

a. When the zone has been scheduled for occupancy for at least one hour and the occupancy sensor has confirmed that zone has been vacant for 5 minutes (adjustable: maximum 30 minutes), zone shall be placed into Vacant Mode.
b. Reset cooling and heating setpoints up and down by 2°F (adjustable) or more.
c. Minimum Outdoor Air ventilation requirements in the zone need only be maintained 15 minutes out of every 60 minutes while the zone is in Vacant Mode.
d. Upon detection of occupancy, Vacant Mode shall be cleared.

8. Zone Pre-Occupancy Purge

a. The EMS shall schedule the zone to be in Occupied Mode one hour prior to the actual time of anticipated occupancy.

9. Heating operation

a. The controller compares the heating setpoint with the space temperature and determines a need-heating control signal to stage a gas regulating valve on the unit.
b. Economizer to be commanded to Min CFM setpoint and mechanical cooling to be locked out during heating mode.

10. Cooling operation

a. The controller compares the cooling setpoint with the space temperature and determines a need-cooling signal.
b. The first stage of cooling will enable the economizer to provide free cooling for as long as possible.
c. The second stage will enable the compressor(s) to maintain the room set point.
d. Mechanical heating to be locked out during cooling mode.

11. Fault Detection Diagnostics

a. The EMS DDC Controller shall monitor the following economizer actuator Fault Detection Diagnostic conditions and broadcast results via EMS network:
i. Temperature Sensor Failure/Fault
ii. Economizer not economizing when enabled
iii. Economizer economizing when disabled
iv. Economizer damper modulation failure
v. Excess outdoor air

13. Monitoring - The following conditions shall be monitored and displayed at EMS Operator Workstation/Graphical User Interface:

a. Supply air temperature.
b. Room temperature.
c. Room humidity.
d. Room CO2 concentration.
e. Room occupancy status.
f. Current mode (heating/cooling/fan).
g. Supply air temperature attained last time unit was in heating.
h. Supply air temperature attained last time unit was in cooling.
i. Current command status of fan, economizer, compressor and gas valve.
j. Run time meters on fan, compressor, and heat.
k. Economizer actuator feedback status.

QUATTROCCHI KWOK ARCHITECTS
Main Office:
636 Fifth Street, Santa Rosa, CA 95404
Pleasanton Office:
600 Main Street, Suite E,
Pleasanton, CA 94566
(707) 576-0829

COSTA ENGINEERS INC.
3274 Villa Lane Napa, CA 94558 ph: 707.252.9177 fax: 707-252-0473
REGISTERED PROFESSIONAL ENGINEER CHRISTOPHER J. POE LOPEZ NO. 31500 Exp. 12-31-20 MECHANICAL STATE OF CALIFORNIA

FREEDOM HIGH SCHOOL

PERFORMING ARTS AND CTE FACILITIES

1050 NEROLY RD
OAKLEY, CA 94561

LIBERTY UNION HIGH SCHOOL DISTRICT

ARCH PROJECT NO:	1739.00
DRAWN BY:	Author
DRAWING SCALE:	
PTN:	61721-0068

BID SET

AUGUST 13, 2019

SHEET TITLE

MECHANICAL CONTOLS

SHEET NUMBER

M5.3

7/17/2019 6:04:59 PM C:\Users\mqueveda\Documents\18036 Freedom HS PAC rvt16_mqueveda@costaengineers.com.rvt

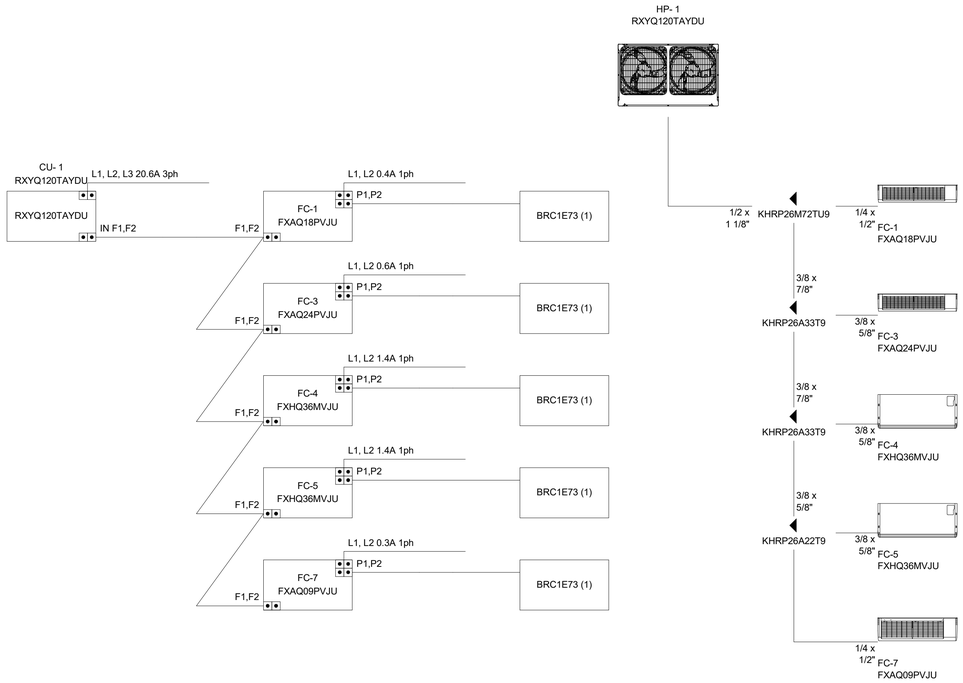

A HEAT PUMP 1 WIRING/PIPING DIAGRAM

SCALE: NONE

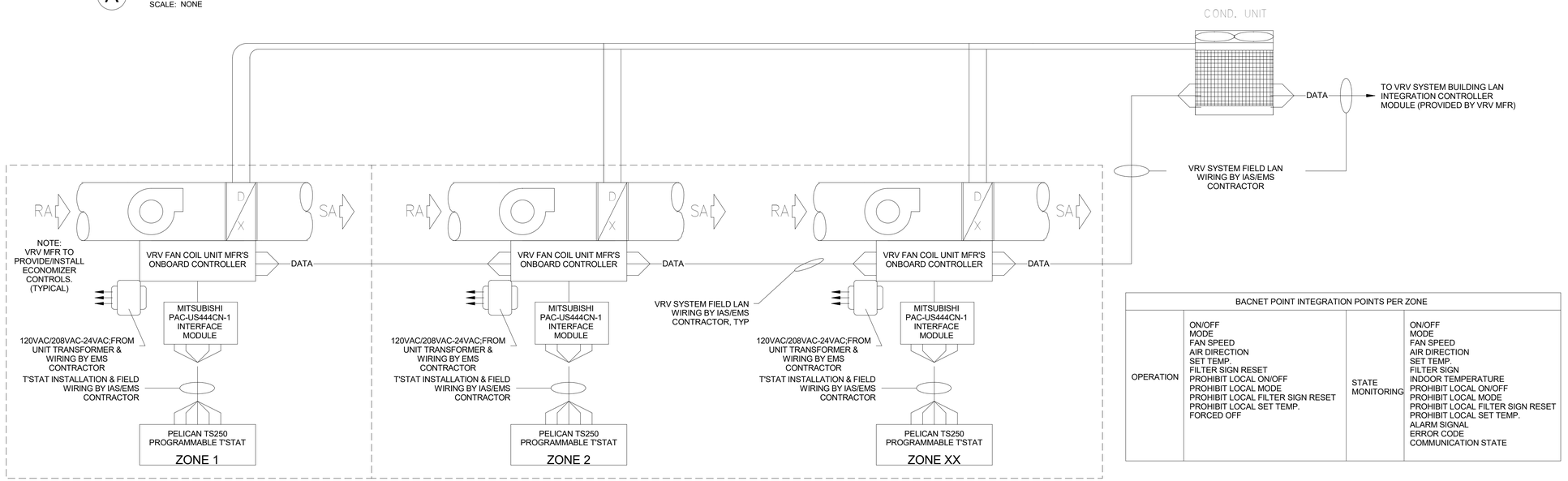

BACNET POINT INTEGRATION POINTS PER ZONE			
OPERATION	ON/OFF MODE FAN SPEED AIR DIRECTION SET TEMP. FILTER SIGN RESET PROHIBIT LOCAL ON/OFF PROHIBIT LOCAL MODE PROHIBIT LOCAL FILTER SIGN RESET PROHIBIT LOCAL SET TEMP. FORCED OFF	STATE MONITORING	ON/OFF MODE FAN SPEED AIR DIRECTION SET TEMP. FILTER SIGN INDOOR TEMPERATURE PROHIBIT LOCAL ON/OFF PROHIBIT LOCAL MODE PROHIBIT LOCAL FILTER SIGN RESET PROHIBIT LOCAL SET TEMP. ALARM SIGNAL ERROR CODE COMMUNICATION STATE

B HEAT PUMP 1 CONTROLS DIAGRAM

SCALE: NONE

QUATTROCCHI KWOK ARCHITECTS
Main Office:
636 Fifth Street, Santa Rosa, CA 95404
Pleasanton Office:
600 Main Street, Suite E,
Pleasanton, CA 94566
(707) 576-0829

COSTA ENGINEERS INC.
3274 Villa Lane Napa, CA 94558 ph: 707.252.9177 fax: 707-252-0473

REGISTERED PROFESSIONAL ENGINEER
CHRISTOPHER J. POE LOPEZ
NO. 31500
Exp. 12-31-20
MECHANICAL
STATE OF CALIFORNIA

FREEDOM HIGH SCHOOL

PERFORMING ARTS AND CTE FACILITIES

1050 NEROLY RD
OAKLEY, CA 94561

LIBERTY UNION HIGH SCHOOL DISTRICT

ARCH PROJECT NO:	1739.00
DRAWN BY:	Author
DRAWING SCALE:	
PTN:	61721-0068

BID SET

AUGUST 13, 2019

SHEET TITLE

MECHANICAL CONTROLS

SHEET NUMBER

M5.4

7/17/2019 6:04:59 PM C:\Users\mquevedo\Documents\18036 Freedom HS PAC rvt16_mquevedo@costaengineers.com.rvt

THE WIRELESS GATEWAY IS DESIGNATED TO BE WALL MOUNTED USING THE INCLUDED 3M COMMAND REMOVABLE STRIPS.

FIND A SUITABLE LOCATION WHICH IS:

-WITHIN 10 FEET OF YOUR INTERNET ROUTER
-WITHIN 4 FEET OF AN ELECTRICAL OUTLET
-AT LEAST 4 FEET AWAY FROM OTHER WIRELESS DEVICES
-AWAY FROM LARGE METAL OBJECTS WHICH MAY INTERFERE WITH THE WIRELESS SIGNAL.
-ABOVE OFFICE EQUIPMENT WHICH MAY INTERFERE WITH THE WIRELESS SIGNAL
-ACTUAL QUANTITY AND LOCATIONS TO BE DETERMINED BY INSTALLER. NO PRACTICAL LIMITS TO NUMBER OF THERMOSTATS SUPPORTED BY A SINGLE GATEWAY

FACTORY IP ADDRESS GATE WAY WILL CONNECT AUTOMATICALLY TO PELICAN SERVER AFTER SERIAL NO. OF GATEWAY IS REGISTERED ON PELICAN SITE.

GO TO:http//www.pelicanwireless.com/new-site-subscription/

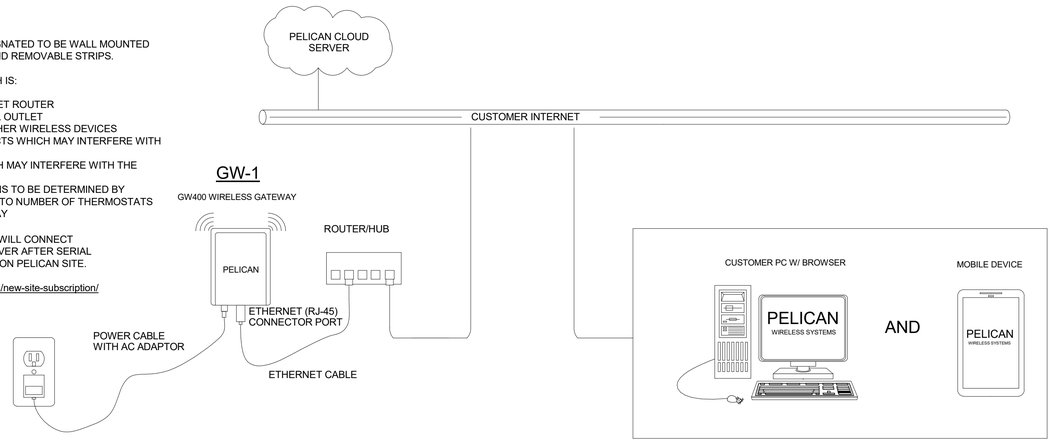

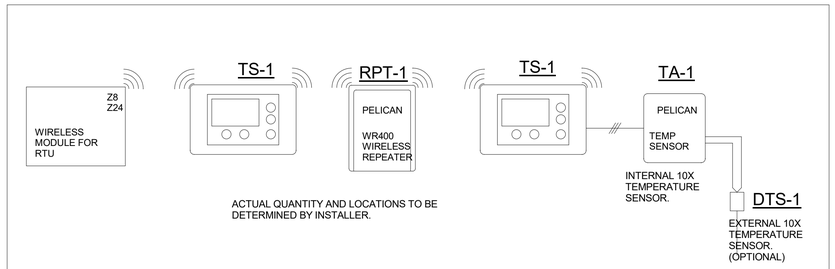

WIRELESS COMPONENTS		
TAG	PART NUMBER	DESCRIPTION
RPT-1	PEL WR400	WIRELESS REPEATER, WITH POWER ADAPTOR
GW-1	PEL GW400	WIRELESS GATEWAY, WITH POWER ADAPTOR
TS-1	TS250	TEMPERATURE AND CO2 SENSOR WITH PEAL ECONOMIZER CONTROLLER

A TYPICAL PELICAN WIRELESS LAN LAYOUT

SCALE: NONE

QUATTROCCHI KWOK ARCHITECTS
Main Office:
636 Fifth Street, Santa Rosa, CA 95404
Pleasanton Office:
600 Main Street, Suite E,
Pleasanton, CA 94566
(707) 576-0829

COSTA ENGINEERS INC.
3274 Villa Lane Napa, CA 94558 ph: 707.252.9177 fax: 707-252-9473

REGISTERED PROFESSIONAL ENGINEER
CHRISTOPHER J. POE COSTA
NO. 31500
Exp. 12-31-20
MECHANICAL
STATE OF CALIFORNIA

FREEDOM HIGH SCHOOL

PERFORMING ARTS AND CTE FACILITIES

1050 NEROLY RD
OAKLEY, CA 94561

LIBERTY UNION HIGH SCHOOL DISTRICT

ARCH PROJECT NO:	1739.00
DRAWN BY:	Author
DRAWING SCALE:	
PTN:	61721-0068

BID SET

AUGUST 13, 2019

SHEET TITLE

MECHANICAL CONTROLS

SHEET NUMBER

M5.5

7/17/2019 6:04:59 PM C:\Users\mquevedo\Documents\18036 Freedom HS PAC rvt16_mquevedo@costaengineers.com.rvt

HANGER ROD DIAMETER = ⅜"

ROUND DUCT TRANSVERSE SEISMIC CABLE BRACING SYSTEM 30 PLF MAX

KIT OPTIONS TC0T

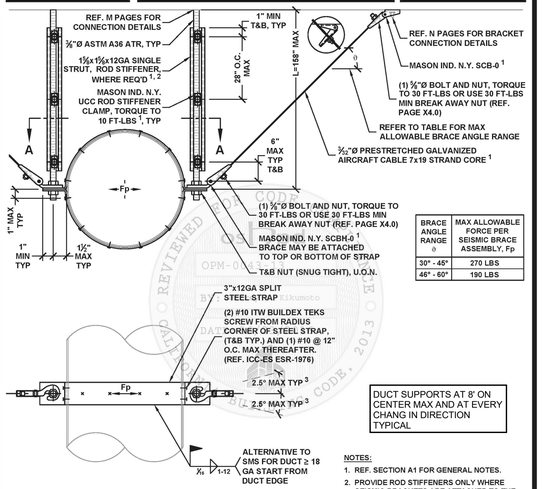

BRACE ANGLE RANGE θ	MAX ALLOWABLE FORCE PER SEISMIC BRACE ASSEMBLY, Fp
30° - 45°	270 LBS
46° - 60°	190 LBS

DUCT SUPPORTS AT 8' ON CENTER MAX AND AT EVERY CHANG IN DIRECTION TYPICAL

NOTES:
1. REF. SECTION A1 FOR GENERAL NOTES.
2. PROVIDE ROD STIFFENERS ONLY WHERE SEISMIC BRACKETS ARE ATTACHED TO THE ROD AND ROD LENGTH (L) EXCEEDS 18". REF. APPROPRIATE M10 PAGES FOR DETAIL.
3. ANGLE MAY BE INCREASED TO 15°, REF. PAGE A5.0.

VIEW A-A

MASON WEST, INC.
1601 E. Miraloma Ave. Placentia, CA 92870
TEL (714) 630 - 0701, www.masonwest.com

Jiefu "Jeff" Zhang, SE
California SE No. S5270

PAGE D6.10

1 06/23/2016 OPM-0043-13: Reviewed for Code Compliance by Jeffrey Kikumoto Page 293 of 669

12" RULE FOR SUSPENDED DUCTWORK

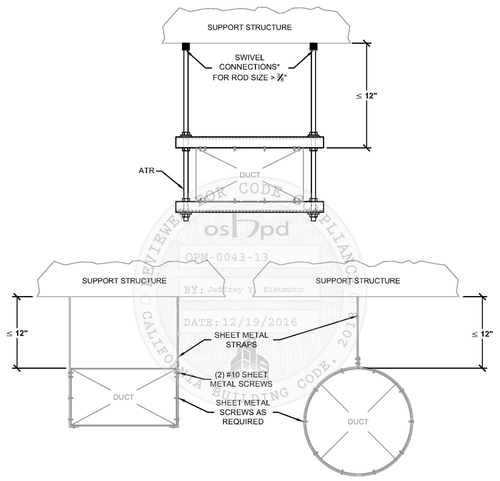

*NOTE: CONNECTIONS COMPLYING INCLUDE SWIVEL JOINTS, EYE BOLTS, ETC.

DUCT SUPPORTS AT 8' ON CENTER MAX AND AT EVERY CHANG IN DIRECTION TYPICAL

MASON WEST, INC.
1601 E. Miraloma Ave. Placentia, CA 92870
TEL (714) 630 - 0701, www.masonwest.com

Jiefu "Jeff" Zhang, SE
California SE No. S5270

PAGE A4.0

2 12/19/2016 OPM-0043-13: Reviewed for Code Compliance by Jeffrey Kikumoto Page 25 of 673

HANGER ATTACHMENT TO NON-CONCRETE FILLED METAL DECK

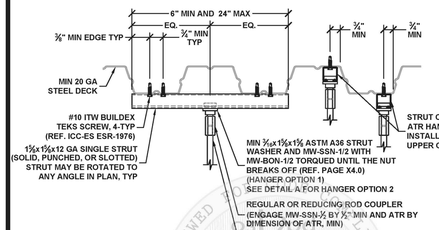

HANGER ATTACHMENT TYPE	ALLOWABLE VERTICAL LOAD LBS	ATR HANGER DIA. INCH
38A TO 38E	350	⅜
50A TO 50E	350	½
63A TO 63E	350	⅝
75A TO 75E	350	¾

1 - SEE DETAIL M0.00 FOR SECTION NOTES
2 - THE DISTANCE FROM THE CENTER OF ANY SHEET METAL SCREW TO ANY STEEL EDGE SHALL BE ½" MIN, INCLUDING PUNCHED AND SLOTTED HOLE EDGES.

MASON WEST, INC.
1601 E. Miraloma Ave. Placentia, CA 92870
TEL (714) 630 - 0701, www.masonwest.com

Jiefu "Jeff" Zhang, SE
California SE No. S5270

PAGE M7.10

3 06/23/2016 OPM-0043-13: Reviewed for Code Compliance by Jeffrey Kikumoto Page 491 of 669

SCREWS TO 18 GA. MIN. METAL DECK WITH NO CONCRETE FILL

SHOWN WITH 900 SERIES ATTACHMENT PERPENDICULAR TO FLUTES

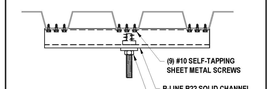

SHOWN WITH 900 SERIES ATTACHMENT PARALLEL TO FLUTES

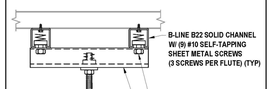

ALLOWABLE STRENGTH DESIGN (ASD)	
MAX. VERTICAL LOAD (LB)	
PERPENDICULAR	PARALLEL
100	100

NOTES:
1.) STRUCTURAL ENGINEER OF RECORD SHALL VERIFY ADEQUACY OF THE STRUCTURE FOR THE TABULATED ALLOWABLE LOADS.
2.) STRUT NUTS MAY BE USED INSTEAD OF SPRING NUTS AS SHOWN.
3.) SCREWS SHALL BE 1" MIN. LONG.
4.) SCREWS SHALL BE SPACED AT 5/8" MINIMUM SPACING WITH 3/8" MIN. EDGE DISTANCE.
5.) APPLIED LOADS INCLUDE VERTICAL GRAVITY LOADS PLUS VERTICAL SEISMIC LOADS.
6.) STRUT HOLE SIZE SHALL BE NO LARGER THAN BOLT DIAMETER PLUS 1/16" PER AISI.

EATON
Powering Business Worldwide
EATON'S B-LINE BUSINESS
509 WEST MONROE STREET | HIGHLAND, IL 62249
P: (800) 851-7415 | F: (800) 356 1408

Structural Engineer: Mohammad Hariri
California SE No. S3545

PAGE: 11-41
DATE: NOVEMBER 29, 2016

4 12/06/2016 OPM-0052-13: Reviewed for Code Compliance by Jeffrey Kikumoto Page 389 of 501

HANGER ROD DIAMETER = ⅜"

RECTANGULAR DUCT TRANSVERSE SEISMIC CABLE BRACING SYSTEM 30 PLF MAX

KIT OPTIONS TC0T

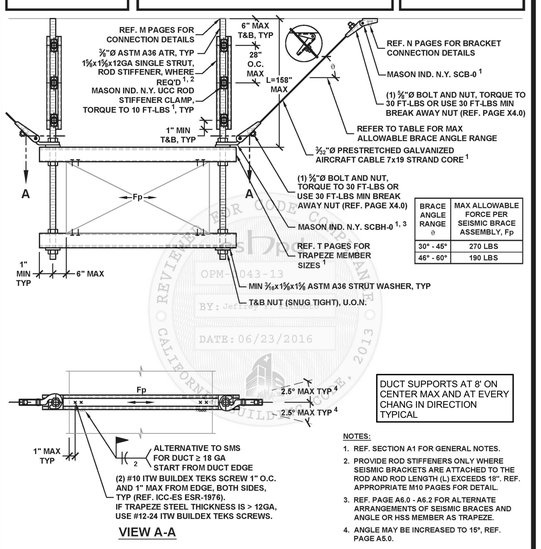

BRACE ANGLE RANGE θ	MAX ALLOWABLE FORCE PER SEISMIC BRACE ASSEMBLY, Fp
30° - 45°	270 LBS
46° - 60°	190 LBS

DUCT SUPPORTS AT 8' ON CENTER MAX AND AT EVERY CHANG IN DIRECTION TYPICAL

NOTES:
1. REF. SECTION A1 FOR GENERAL NOTES.
2. PROVIDE ROD STIFFENERS ONLY WHERE SEISMIC BRACKETS ARE ATTACHED TO THE ROD AND ROD LENGTH (L) EXCEEDS 18". REF. APPROPRIATE M10 PAGES FOR DETAIL.
3. REF. PAGE A5.0 - A6.2 FOR ALTERNATE ARRANGEMENTS OF SEISMIC BRACES AND ANGLE OR HSS MEMBER AS TRAPEZE.
4. ANGLE MAY BE INCREASED TO 15°, REF. PAGE A5.0.

VIEW A-A

MASON WEST, INC.
1601 E. Miraloma Ave. Placentia, CA 92870
TEL (714) 630 - 0701, www.masonwest.com

Jiefu "Jeff" Zhang, SE
California SE No. S5270

PAGE D4.10

5 06/23/2016 OPM-0043-13: Reviewed for Code Compliance by Jeffrey Kikumoto Page 281 of 669

ATR HANGER ATTACHMENT TO STEEL BEAM WITH STEEL BEAM CLAMPS

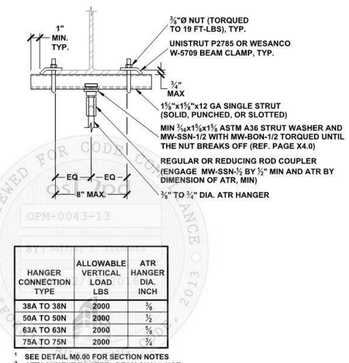

HANGER CONNECTION TYPE	ALLOWABLE VERTICAL LOAD LBS	ATR HANGER DIA. INCH
38A TO 38N	2000	⅜
50A TO 50N	2000	½
63A TO 63N	2000	⅝
75A TO 75N	2000	¾

1 SEE DETAIL M0.00 FOR SECTION NOTES
2 ATTACHMENT TO STEEL BEAM SHALL NOT BE PLACED WITHIN THE PROTECTED ZONE AS DEFINED IN AISC 341.

MASON WEST, INC.
1601 E. Miraloma Ave. Placentia, CA 92870
TEL (714) 630 - 0701, www.masonwest.com

Jiefu "Jeff" Zhang, SE
California SE No. S5270

PAGE M3.14

6 12/19/2016 OPM-0043-13: Reviewed for Code Compliance by Jeffrey Kikumoto Page 482 of 673

QUATTROCCHI KWOK ARCHITECTS
Main Office:
636 Fifth Street, Santa Rosa, CA 95404
Pleasanton Office:
600 Main Street, Suite E,
Pleasanton, CA 94566
(707) 576-0829

COSTA ENGINEERS INC.
3274 Villa Lane Napa, CA 94558 ph: 707.252.9177 fax: 707.252.0473

REGISTERED PROFESSIONAL ENGINEER
CHRISTOPHER J. POE COSTA
NO. 31500
Exp. 12-31-20
MECHANICAL
STATE OF CALIFORNIA

FREEDOM HIGH SCHOOL

PERFORMING ARTS AND CTE FACILITIES

1050 NEROLY RD
OAKLEY, CA 94561

LIBERTY UNION HIGH SCHOOL DISTRICT

ARCH PROJECT NO:	1739.00
DRAWN BY:	Author
DRAWING SCALE:	
PTN:	61721-0068

BID SET

AUGUST 13, 2019

SHEET TITLE

OPM-0043-13 REFERENCE

SHEET NUMBER

M5.6

7/17/2019 6:04:59 PM C:\Users\mquevedo\Documents\18036 Freedom HS PAC rvt16_mquevedo@costaengineers.com.rvt

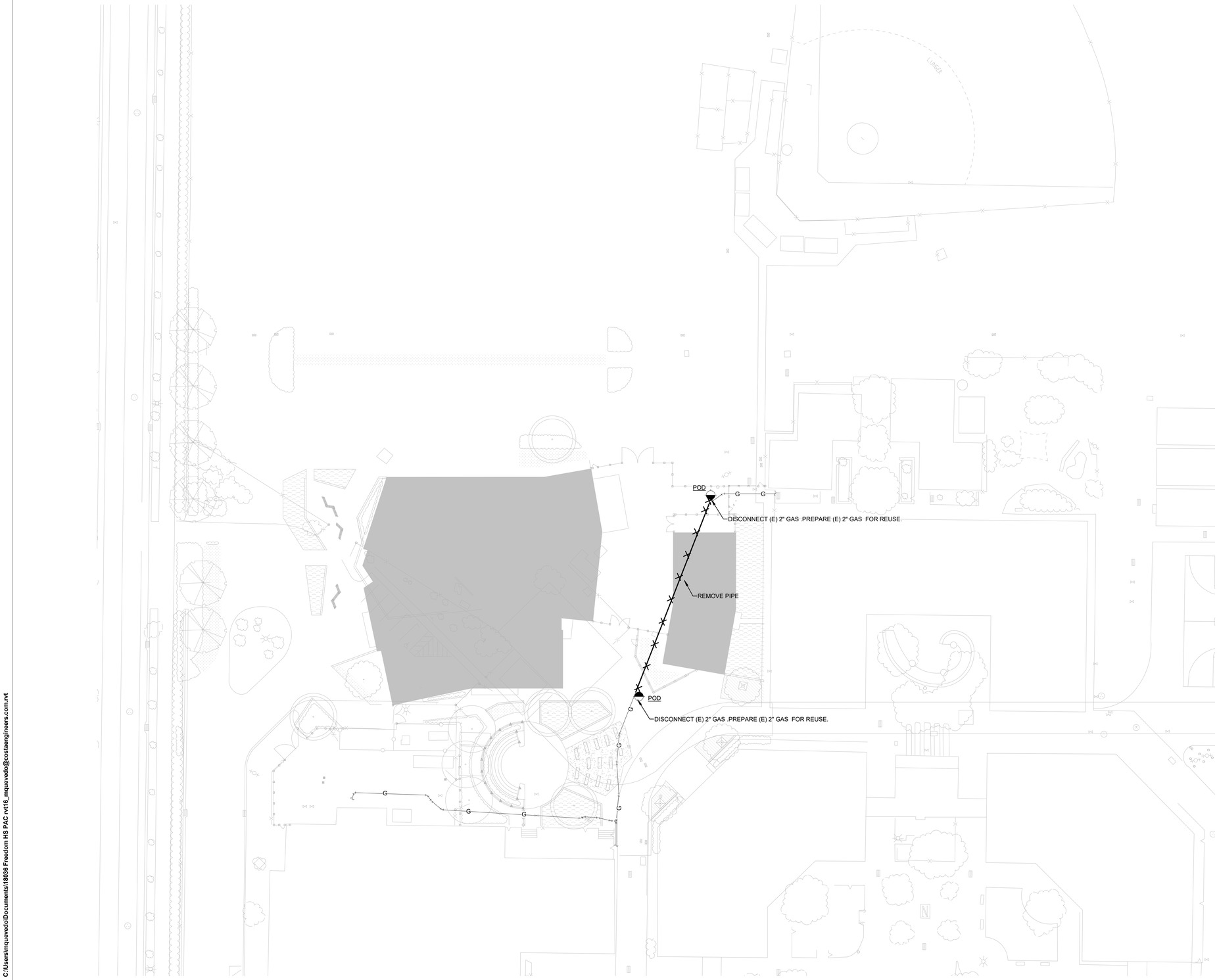

1 **DEMOLITION GAS SITE PLAN**

SCALE: 1" = 30'-0"

GENERAL NOTES: DEMO

1. SEE SEC: 02 4116 BLDG DEMO
2. SEE 22 0000 PLUMBING

QUATTROCCHI KWOK ARCHITECTS

Main Office:
636 Fifth Street, Santa Rosa, CA 95404
Pleasanton Office:
600 Main Street, Suite E,
Pleasanton, CA 94566
(707) 576-0829

COSTA ENGINEERS INC.
3274 Villa Lane Napa, CA 94558 ph: 707-252-9177 fax: 707-252-6473

REGISTERED PROFESSIONAL ENGINEER
CHRISTOPHER J. DEL CORE
NO. 31600
Exp. 12-31-20
MECHANICAL
STATE OF CALIFORNIA

FREEDOM HIGH SCHOOL

PERFORMING ARTS AND CTE FACILITIES

1050 NEROLY RD
OAKLEY, CA 94561

LIBERTY UNION HIGH SCHOOL DISTRICT

ARCH PROJECT NO:	1739.00
DRAWN BY:	Author
DRAWING SCALE:	1" = 30'-0"
PTN:	61721-0068

BID SET

AUGUST 13, 2019

SHEET TITLE

GAS DEMOLITION SITE PLAN

SHEET NUMBER

PD1.0

7/17/2019 6:05:28 PM C:\Users\mquevedo\Documents\18036 Freedom HS PAC rvt16_mquevedo@costaengineers.com.rvt

ELECTRIC WATER HEATER SCHEDULE

CEI MARK	MANUF.	MODEL	TYPE	STORAGE CAPACITY	ELECTRICAL V-Ø-HZ	ELECTRICAL No. Elements	ELECTRICAL WATTS	OPER. WEIGHT	LOCATION
EWH 1	A.O. SMITH	DEL 10	TANK	10 gal	208-1-60	1	2,500 W	140.00 lb	BOYS W/R 136
EWH 2	A.O. SMITH	DEL 10	TANK	10 gal	208-1-60	1	2,500 W	140.00 lb	CUSTODIAL 138
EWH 3	CHRONOMITE	CM-15L/208	INSTANTANEOUS	0 gal	208-1-60	1	3,120 W	5.00 lb	GIRLS W/R 134
EWH 4	CHRONOMITE	CM-15L/208	INSTANTANEOUS	0 gal	208-1-60	1	3,120 W	5.00 lb	BOYS W/R 136
EWH 5	CHRONOMITE	CMT-2.5	TANK	2.5 gal	120-1-60	1	1,440 W	39.00 lb	CTE SHOP

PLUMBING FIXTURE SCHEDULE

	W	V	CW	HW	REMARKS
P-1	4"	2"	1 1/2"		WALL MOUNTED WATER CLOSET
P-1A	4"	2"	1 1/2"		WALL MOUNTED WATER CLOSET (ADA)
P-1B	4"	2"	1 1/2"		FLOOR MOUNTED WATER CLOSE
P-1C	4"	2"	1 1/2"		FLOOR MOUNTED WATER CLOSET ADA
P-2	2"	1 1/2"	3/4"	3/4"	WALL MOUNTED LAVATORY (SAD FOR MOUNTING HEIGHT)
P-2A	2"	1 1/2"	3/4"	0"	WALL MOUNTED LAVATORY (SAD FOR MOUNTING HEIGHT)
P-3	2"	1 1/2"	1"		WALL MOUNTED URINAL
P-4	2"	2"	3/4"	3/4"	FLOOR MOUNTED JANITOR SINK W/(1) HW&CW WALL MOUNT FAUCET WITH 8" SWING SPOUT
P-5A	2"	1 1/2"	3/4"	3/4"	FREESTANDING DOUBLE SINK W/(2) HW&CW WALL MOUNT FAUCET WITH 8" SWING SPOUT
P-6	2"	1 1/2"	3/4"	0"	HI-LOW DRINKING FOUNTAIN W/ BOTTLE FILLER
P-8	2"	1 1/2"	1 1/4"	0"	EMERGENCY EYE WASH
RD					ROOF DRAIN SEE PLAN FOR PIPE SIZES
FD	2"	1 1/2"			FLOOR DRAIN
HB-2			3/4"		EXTERIOR HOSE BIBB

CW FIXTURES AND VALVES SHALL BE AB1953 COMPLIANT.

LIST OF APPLICABLE CODES AND STANDARDS:

TITLE 24, PART 2: 2016 CALIFORNIA BUILDING CODE (VOLUMES 1 & 2)
TITLE 24, PART 3: 2016 CALIFORNIA ELECTRICAL CODE
TITLE 24, PART 4: 2016 CALIFORNIA MECHANICAL CODE
TITLE 24, PART 5: 2016 CALIFORNIA PLUMBING CODE
TITLE 24, PART 6: 2016 CALIFORNIA ENERGY CODE
TITLE 24, PART 9: 2016 CALIFORNIA FIRE CODE
TITLE 24, PART 12: 2016 CALIFORNIA REFERENCED STANDARDS CODE

MEP COMPONENT ANCHORAGE NOTE:

ALL MECHANICAL, PLUMBING, AND ELECTRICAL COMPONENTS SHALL BE ANCHORED AND INSTALLED PER THE DETAILS ON THE DSA APPROVED CONSTRUCTION DOCUMENTS. WHERE NO DETAIL IS INDICATED, THE FOLLOWING COMPONENTS SHALL BE ANCHORED OR BRACED TO MEET THE FORCE AND DISPLACEMENT REQUIREMENTS PRESCRIBED IN THE 2016 CBC, SECTIONS 1616A.1.18 THROUGH 1616A.1.26 AND ASCE 7-10 CHAPTER 13, 26, AND 30.

1. ALL PERMANENT EQUIPMENT AND COMPONENTS.
2. TEMPORARY OR MOVABLE EQUIPMENT THAT IS PERMANENTLY ATTACHED (E.G. HARD WIRED) TO THE BUILDING UTILITY SERVICES SUCH AS ELECTRICITY, GAS OR WATER.
3. MOVABLE EQUIPMENT WHICH IS STATIONED IN ONE PLACE FOR MORE THAN 8 HOURS AND HEAVIER THAN 400 POUNDS ARE REQUIRED TO BE ANCHORED WITH TEMPORARY ATTACHMENTS.

THE FOLLOWING MECHANICAL AND ELECTRICAL COMPONENTS SHALL BE POSITIVELY ATTACHED TO THE STRUCTURE, BUT THE ATTACHMENT NEED NOT BE DETAILED ON THE PLANS. THESE COMPONENTS SHALL HAVE FLEXIBLE CONNECTIONS PROVIDED BETWEEN THE COMPONENT AND ASSOCIATED DUCTWORK, PIPING, AND CONDUIT.

A. COMPONENTS WEIGHING LESS THAN 400 POUNDS AND HAVE A CENTER OF MASS LOCATED 4 FEET OR LESS ABOVE THE ADJACENT FLOOR OR ROOF LEVEL THAT DIRECTLY SUPPORT THE COMPONENT.

B. COMPONENTS WEIGHING LESS THAN 20 POUNDS, OR IN THE CASE OF DISTRIBUTED SYSTEMS, LESS THAN 5 POUNDS PER FOOT, WHICH ARE SUSPENDED FROM A ROOF OR FLOOR OR HUNG FROM A WALL.

FOR THOSE ELEMENTS THAT DO NOT REQUIRE DETAILS ON THE APPROVED DRAWINGS, THE INSTALLATION SHALL BE SUBJECT TO THE APPROVAL OF THE DESIGN PROFESSIONAL IN GENERAL RESPONSIBLE CHARGE OR STRUCTURAL ENGINEER DELEGATED RESPONSIBILITY AND THE DSA DISTRICT STRUCTURAL ENGINEER. THE PROJECT INSPECTOR WILL VERIFY THAT ALL COMPONENTS AND EQUIPMENT HAVE BEEN ANCHORED IN ACCORDANCE WITH ABOVE REQUIREMENTS.

PIPING, DUCTWORK, AND ELECTRICAL DISTRIBUTION SYSTEM BRACING NOTE:

PIPING, DUCTWORK, AND ELECTRICAL DISTRIBUTION SYSTEMS SHALL BE BRACED TO COMPLY WITH THE FORCES AND DISPLACEMENTS PRESCRIBED IN ASCE 7-10 SECTION 13.3 AS DEFINED IN ASCE 7-10 SECTION 13.6.8, 13.6.7, 13.6.5.6, AND 2016 CBC, SECTIONS 1616A.1.24, 1616A.1.25, AND 1616A.1.26.

THE METHOD OF SHOWING BRACING AND ATTACHMENTS TO THE STRUCTURE FOR THE IDENTIFIED DISTRIBUTION SYSTEMS ARE AS NOTED BELOW. WHEN BRACING AND ATTACHMENTS ARE BASED ON PRE APPROVED INSTALLATION GUIDE (e.g. SMACNA OR OSHPD OPM), COPIES OF THE BRACING SYSTEM INSTALLATION GUIDE OR MANUAL SHALL BE AVAILABLE ON THE JOBSITE PRIOR TO THE START OF AND DURING THE HANGING AND BRACING OF THE DISTRIBUTION SYSTEM. THE STRUCTURAL ENGINEER OF RECORD SHALL VERIFY THE ADEQUACY OF THE STRUCTURE TO SUPPORT THE HANGER AND BRACE LOADS.

☒ MECHANICAL/PLUMBING/DUCTS

M☐ PP☐ D☐	-OPTION 1:☐	DETAILED ON THE APPROVED DRAWINGS WITH PROJECT SPECIFIC NOTES AND DETAILS.
M☐ PP☒ D☐	-OPTION 2:☒	SHALL COMPLY WITH THE OSHPD PRE-APPROVAL (OPM #) # 0043-13
M☐ PP☐ D☐	-OPTION 3:☐	SHALL COMPLY WITH THE SMACNA SEISMIC RESTRAINT MANUAL, OSHPD EDITION (2009), INCLUDING ANY ADDENDA. FASTENERS AND OTHER ATTACHMENTS NOT SPECIFICALLY IN THE SMACNA SEISMIC RESTRAINT MANUAL, OSHPD EDITION, ARE DETAILED ON THE APPROVED DRAWINGS WITH PROJECT SPECIFIC NOTES AND DETAILS. THE DETAILS SHALL ACCOUNT APPLICABLE SEISMIC HAZARD LEVEL ____ AND CONNECTIONS LEVEL ____ FOR THE PROJECT AND CONDITIONS.

PLUMBING LEGEND

SYMBOL	ABBREVIATION	DESCRIPTION
X / X		EQUIPMENT TYPE / EQUIPMENT NUMBER
X / X-X		DETAIL / DRAWING NUMBER / SHEET NUMBER
X-XX		FIXTURE TYPE/NUMBER
	(N)	NEW PLUMBING AND PIPING SHOWN HEAVY
	(E)	EXISTING PLUMBING AND PIPING SHOWN LIGHT
	SS	SANITARY WASTE ABOVE GROUND
	SS	SANITARY WASTE BELOW GROUND
	V	VENT PIPE
	DCW	DOMESTIC COLD WATER PIPE
	DHW	DOMESTIC HOT WATER PIPE
	DHWR	DOMESTIC HOT WATER RETURN PIPE
CA	CA	COMPRESSED AIR
CD	CD	CONDENSATE DRAIN
G	G	NATURAL GAS PIPE
O2	O2	OXYGEN
RVD	RVD	RELIEF VALVE DISCHARGE
RWL	RWL	RAIN WATER LEADER
OD	OD	OVERFLOW DRAIN
SD	SD	STORM DRAIN PIPE
VAC	VAC	VACUUM LINE
	GV	GATE VALVE
		GLOBE VALVE
	BV	BALL VALVE
	BFV	BUTTERFLY VALVE
	CV	CHECK VALVE
		BALANCING VALVE
		GAS COCK OR STOP
	PRV	PRESSURE REDUCING VALVE
	TV	TEMPERING VALVE
		STRAINER
		UNION
		PRESSURE GAUGE AND COCK
	P	PUMP
		THERMOMETER
	CO	CLEANOUT
	WCO	WALL CLEANOUT
	FCO	FLOOR CLEANOUT
	COTG	CLEANOUT TO GRADE
		PRESSURE GUAGE WELL ONLY (PETE'S PLUG)
	HB	HOSE BIBB
		PIPE UP
		PIPE DOWN
		BRANCH TOP CONNECTION
		BRANCH BOTTOM CONNECTION
		BRANCH SIDE CONNECTION
		CAP ON END OF PIPE
		CONCENTRIC REDUCER
		ECCENTRIC REDUCER
		VALVE IN RISER
		POINT OF CONNECTION
		POINT OF DEMOLITION
℄		CENTER LINE
	AFF	ABOVE FINISHED FLOOR
	AFG	ABOVE FINISHED GRADE
	AFC	ABOVE FINISHED CEILING
	AP	ACCESS PANEL
	BFF	BELOW FINISHED FLOOR
	BG	BELOW GRADE
	CI	CAST IRON
	COTG	CLEANOUT TO GRADE
	DMV	DRAIN, WASTE, AND VENT
	DN	DOWN
	DW	DISHWASHER
	DWG	DRAWING
	(E)	EXISTING
	FCO	FLOOR CLEANOUT
	IE	INVERT ELEVATION
	IW	INDIRECT WASTE
	MFR	MANUFACTURER
	(N)	NEW
	NIC	NOT IN CONTRACT
	NTS	NOT TO SCALE
	SA	SHOCK ABSORBER
	SAD	SEE ARCHITECTURAL DRAWINGS
	SCD	SEE CIVIL DRAWINGS
	SED	SEE ELECTRICAL DRAWINGS
	SMD	SEE MECHANICAL DRAWINGS
	SSD	SEE STRUCTURAL DRAWINGS
	SFD	SEE FIRE DRAWINGS
	SOV	SHUT OFF VALVE
	TYP	TYPICAL
	TP	TRAP PRIMMER
	UMC	UNIFORM MECHANICAL CODE
	UPC	UNIFORM PLUMBING CODE
	UNO	UNLESS NOTED OTHERWISE
	V	VENT
	VTR	VENT THROUGH ROOF
	WCO	WALL CLEANOUT
	WA	WATER HAMMER ARRESTOR

BLDG 'PLUMBING' SHEET LIST

PD1.0	GAS DEMOLITION SITE PLAN
P1.0	GAS SITE PLAN
P1.1	PLUMBING SCHEDULES & LEGENDS
P-A2.1	PLUMBING FLOOR PLAN
P-A2.2	PLUMBING CONTROL ROOM FLOOR PLAN
P-A2.3	PLUMBING TECH LEDGE LEVEL
P-A3.1	PLUMBING WASTE & VENT ENLARGED PLANS
P-A3.2	PLUMBING WATER & GAS ENLARGED PLANS
P-B2.1	CTE BUILDING WASTE &VENT FLOOR PLAN
P-B2.2	CTE BUILDING WATER & GAS FLOOR PLAN
P4.1	PLUMBING DETAILS
P4.2	PLUMBING DETAILS
P4.3	PLUMBING DETAILS

QUATTROCCHI KWOK ARCHITECTS
Main Office:
636 Fifth Street, Santa Rosa, CA 95404
Pleasanton Office:
600 Main Street, Suite E,
Pleasanton, CA 94566
(707) 576-0829

COSTA ENGINEERS INC.
3274 Villa Lane Napa, CA 94558 ph: 707.252.9177 fax: 707-252-9473

REGISTERED PROFESSIONAL ENGINEER
CHRISTOPHER J. POE LOPEZ
NO. 31500
Exp. 12-31-20
MECHANICAL
STATE OF CALIFORNIA

FREEDOM HIGH SCHOOL

PERFORMING ARTS AND CTE FACILITIES

1050 NEROLY RD
OAKLEY, CA 94561

LIBERTY UNION HIGH SCHOOL DISTRICT

ARCH PROJECT NO: 1739.00
DRAWN BY: Author
DRAWING SCALE: 12" = 1'-0"
PTN: 61721-0068

BID SET

AUGUST 13, 2019

SHEET TITLE

PLUMBING SCHEDULES & LEGENDS

SHEET NUMBER

P1.1

7/17/2019 6:05:16 PM C:\Users\mquevedo\Documents\18036 Freedom HS PAC rvt16_mquevedo@costaengineers.com.rvt

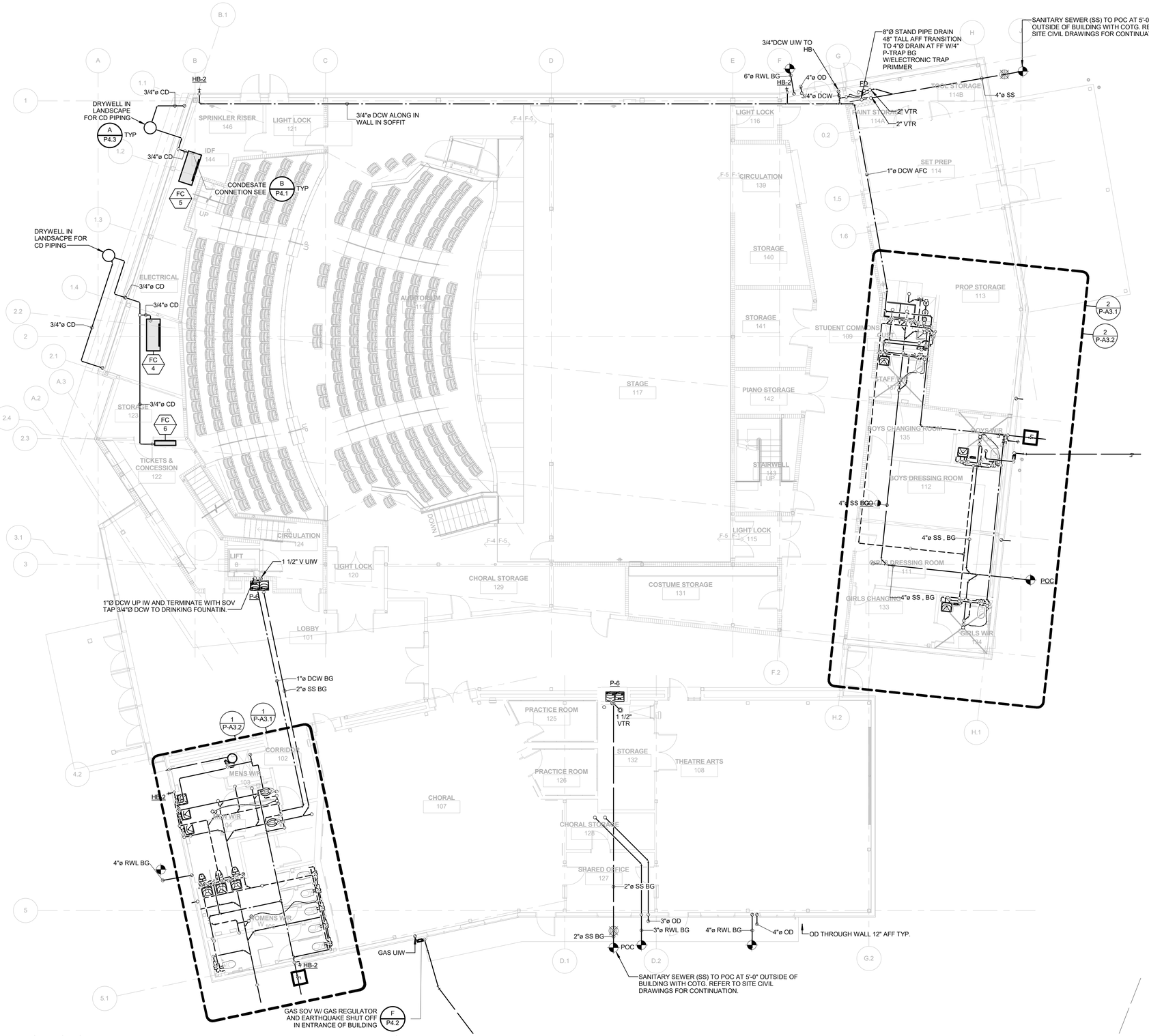

1 FIRST FLOOR PLUMBING FLOOR PLAN

SCALE: 1/8" = 1'-0"

GENERAL NOTES

1. FOR PLUMBING GENERAL NOTES, LEGENDS, AND SYMBOLS, REFER TO SHEET P1.1
2. PLUMBING CONTRACTOR SHALL BE RESPONSIBLE FOR COORDINATING THE PLUMBING WORK WITH OTHER TRADES.
3. SEE ARCHITECTURAL DRAWINGS FOR EXACT LOCATION OF PLUMBING FIXTURES.
4. PROVIDE WALL CLEANOUTS FOR SINKS AND URINALS AS REQUIRED.
5. FOR ACCESSIBLE WATER CLOSETS, LOCATE VALVE HANDLE ON THE ACCESSIBLE SIDE PER ACCESSIBLE REQUIREMENTS.
6. ALL UNDERGROUND AND BELOW SLAB PIPINGSHALL BE INSTALLED NO LESS THAN MINIMUM BURY PER CODE. ALL PIPING THROUGH SLAB, BURIED OR UNDERNEATH FOUNDATION SSD

WALL LEGENDS

NOTES:
ALL WOOD FRAMING IS 6" & 4" STUDS, U.O.N., S.S.D.
ALL WALLS TO BE ACOUSTIC , U.O.N.

1 HR FIRE RATED WALL

WOOD FRAMING - NON RATED, INSULATED

QUATTROCCHI KWOK ARCHITECTS
Main Office:
636 Fifth Street, Santa Rosa, CA 95404
Pleasanton Office:
600 Main Street, Suite E,
Pleasanton, CA 94566
(707) 576-0829

COSTA ENGINEERS INC.
3274 Villa Lane Napa, CA 94558 ph: 707.252.0177 fax: 707-252-0473
REGISTERED PROFESSIONAL ENGINEER CHRISTOPHER J. POE LICENSE NO. 31500 Exp. 12-31-20 MECHANICAL STATE OF CALIFORNIA

FREEDOM HIGH SCHOOL

PERFORMING ARTS AND CTE FACILITIES

1050 NEROLY RD
OAKLEY, CA 94561

LIBERTY UNION HIGH SCHOOL DISTRICT

ARCH PROJECT NO:	1739.00
DRAWN BY:	Author
DRAWING SCALE:	1/8" = 1'-0"
PTN:	61721-0068

BID SET

AUGUST 13, 2019

SHEET TITLE

PLUMBING FLOOR PLAN

SHEET NUMBER

P-A2.1

7/17/2019 6:05:20 PM C:\Users\mquevedo\Documents\18036 Freedom HS PAC rvt16_mquevedo@costaengineers.com.rvt



1 **CONTROL ROOM PLUMBING FLOOR PLAN**

SCALE: 1/8" = 1'-0"

QUATTROCCHI KWOK ARCHITECTS
Main Office:
636 Fifth Street, Santa Rosa, CA 95404
Pleasanton Office:
600 Main Street, Suite E,
Pleasanton, CA 94566
(707) 576-0829

COSTA ENGINEERS INC.
3274 Villa Lane Napa, CA 94558 ph: 707-252-9177 fax: 707-252-4473

REGISTERED PROFESSIONAL ENGINEER
CHRISTOPHER J. DEL CORE
NO. 31600
Exp. 12-31-20
MECHANICAL
STATE OF CALIFORNIA

FREEDOM HIGH SCHOOL

PERFORMING ARTS AND CTE FACILITIES

1050 NEROLY RD
OAKLEY, CA 94561

LIBERTY UNION HIGH SCHOOL DISTRICT

ARCH PROJECT NO:	1739.00
DRAWN BY:	Author
DRAWING SCALE:	1/8" = 1'-0"
PTN:	61721-0068

BID SET

AUGUST 13, 2019

SHEET TITLE

PLUMBING CONTROL ROOM FLOOR PLAN

SHEET NUMBER

P-A2.2

7/17/2019 6:05:21 PM C:\Users\mquevedo\Documents\18036 Freedom HS PAC rvt16_mquevedo@costaengineers.com.rvt

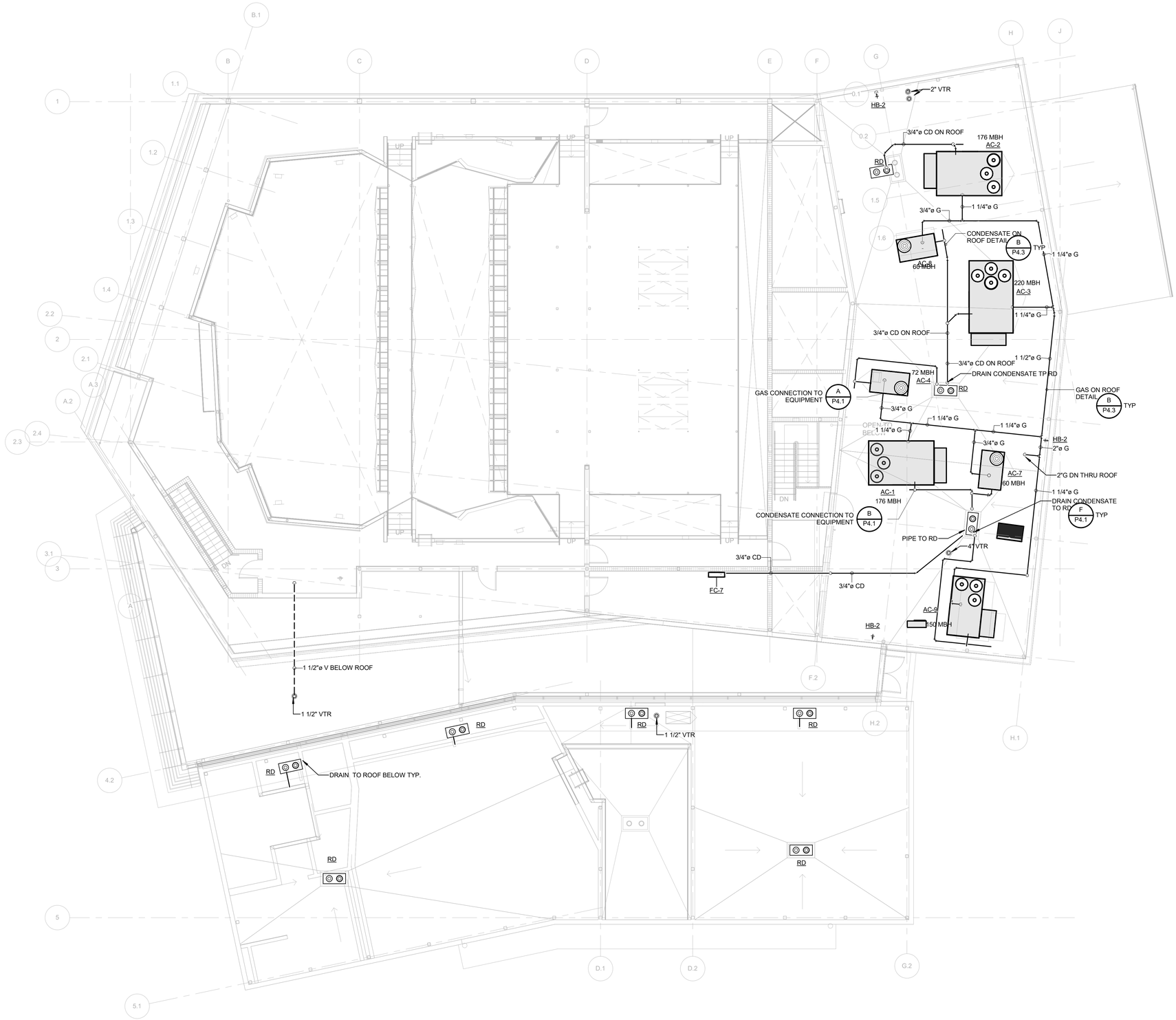

1 PLUMBING TECH LEDGE FLOOR PLAN

SCALE: 1/8" = 1'-0"

7/17/2019 6:05:22 PM C:\Users\mquevedo\Documents\18036 Freedom HS PAC rvt16_mquevedo@costaengineers.com.rvt

QUATTROCCHI KWOK ARCHITECTS
Main Office:
636 Fifth Street, Santa Rosa, CA 95404
Pleasanton Office:
600 Main Street, Suite E,
Pleasanton, CA 94566
(707) 576-0829

COSTA ENGINEERS INC.
3274 Villa Lane Napa, CA 94558 ph: 707.252.9177 fax: 707-252-0473

REGISTERED PROFESSIONAL ENGINEER
CHRISTOPHER J. POE LOPEZ
NO. 31500
Exp. 12-31-20
MECHANICAL
STATE OF CALIFORNIA

FREEDOM HIGH SCHOOL

PERFORMING ARTS AND CTE FACILITIES

1050 NEROLY RD
OAKLEY, CA 94561

LIBERTY UNION HIGH SCHOOL DISTRICT

ARCH PROJECT NO:	1739.00
DRAWN BY:	Author
DRAWING SCALE:	1/8" = 1'-0"
PTN:	61721-0068

BID SET

AUGUST 13, 2019

SHEET TITLE

PLUMBING TECH LEDGE LEVEL

SHEET NUMBER

P-A2.3

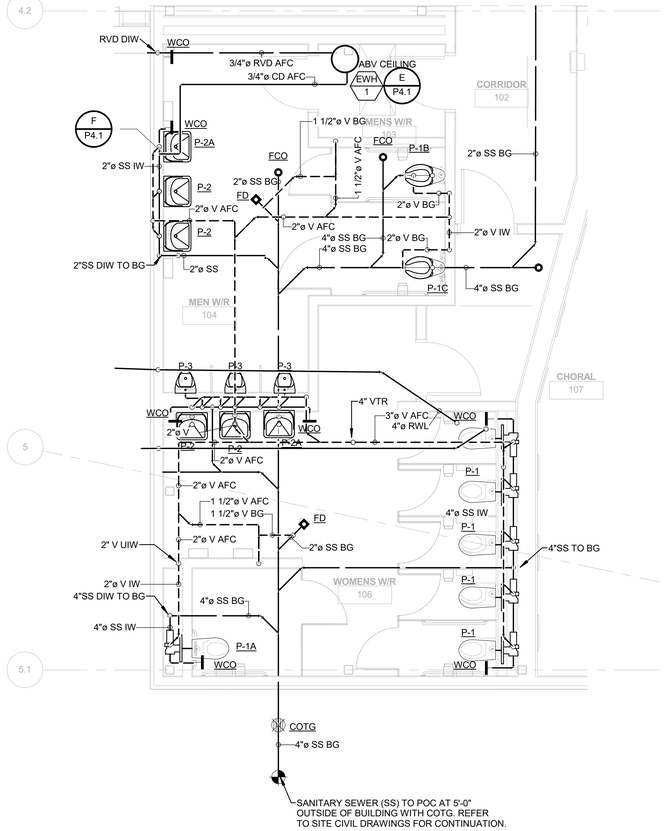

1 W & V ENLARGED PLAN

SCALE: 1/4" = 1'-0"

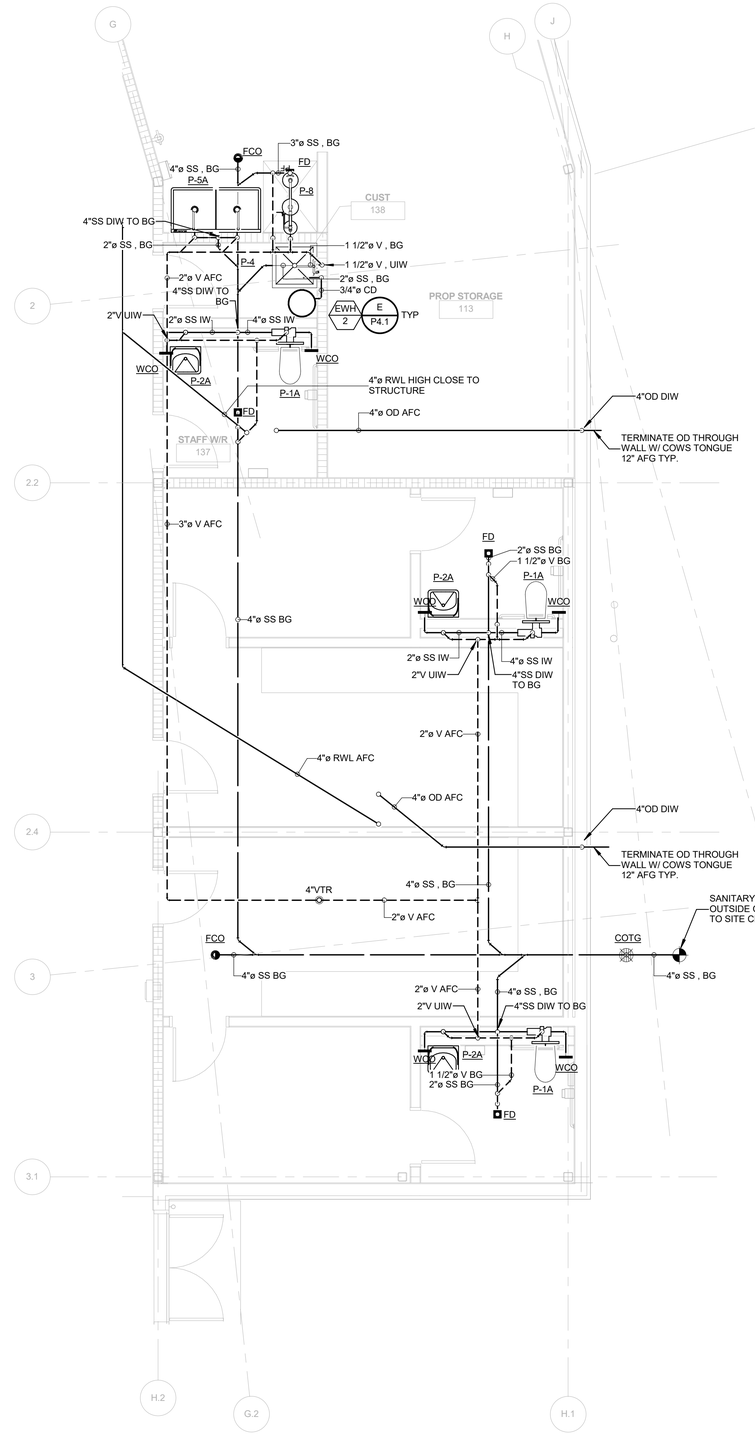

2 W & V ENLARGED PLAN - STAFF W/R

SCALE: 1/4" = 1'-0"

QUATTROCCHI KWOK ARCHITECTS
Main Office:
636 Fifth Street, Santa Rosa, CA 95404
Pleasanton Office:
600 Main Street, Suite E,
Pleasanton, CA 94566
(707) 576-0829

COSTA ENGINEERS INC.
3274 Villa Lane Napa, CA 94558 ph: 707.252.9177 fax: 707-252-8473
REGISTERED PROFESSIONAL ENGINEER
CHRISTOPHER J. COSTA
NO. 31500
Exp. 12-31-20
MECHANICAL
STATE OF CALIFORNIA

FREEDOM HIGH SCHOOL

PERFORMING ARTS AND CTE FACILITIES

1050 NEROLY RD
OAKLEY, CA 94561

LIBERTY UNION HIGH SCHOOL DISTRICT

ARCH PROJECT NO:	1739.00
DRAWN BY:	Author
DRAWING SCALE:	1/4" = 1'-0"
PTN:	61721-0068

BID SET

AUGUST 13, 2019

SHEET TITLE

PLUMBING WASTE & VENT ENLARGED PLANS

SHEET NUMBER

P-A3.1

7/17/2019 6:05:24 PM C:\Users\rmquevedo\Documents\18036 Freedom HS PAC rvt16_mquevedo@costaengineers.com.rvt

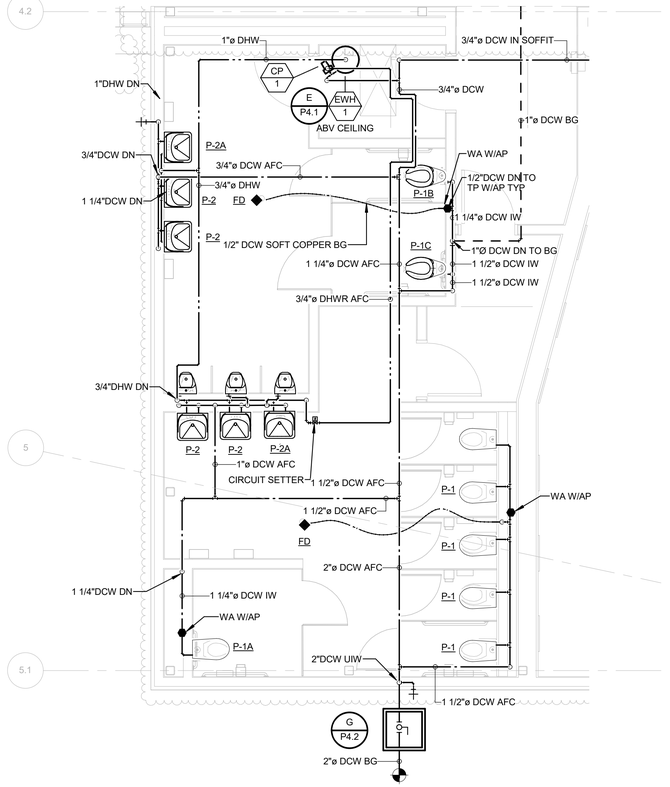

1 W & G ENLARGED PLAN1

SCALE: 1/4" = 1'-0"

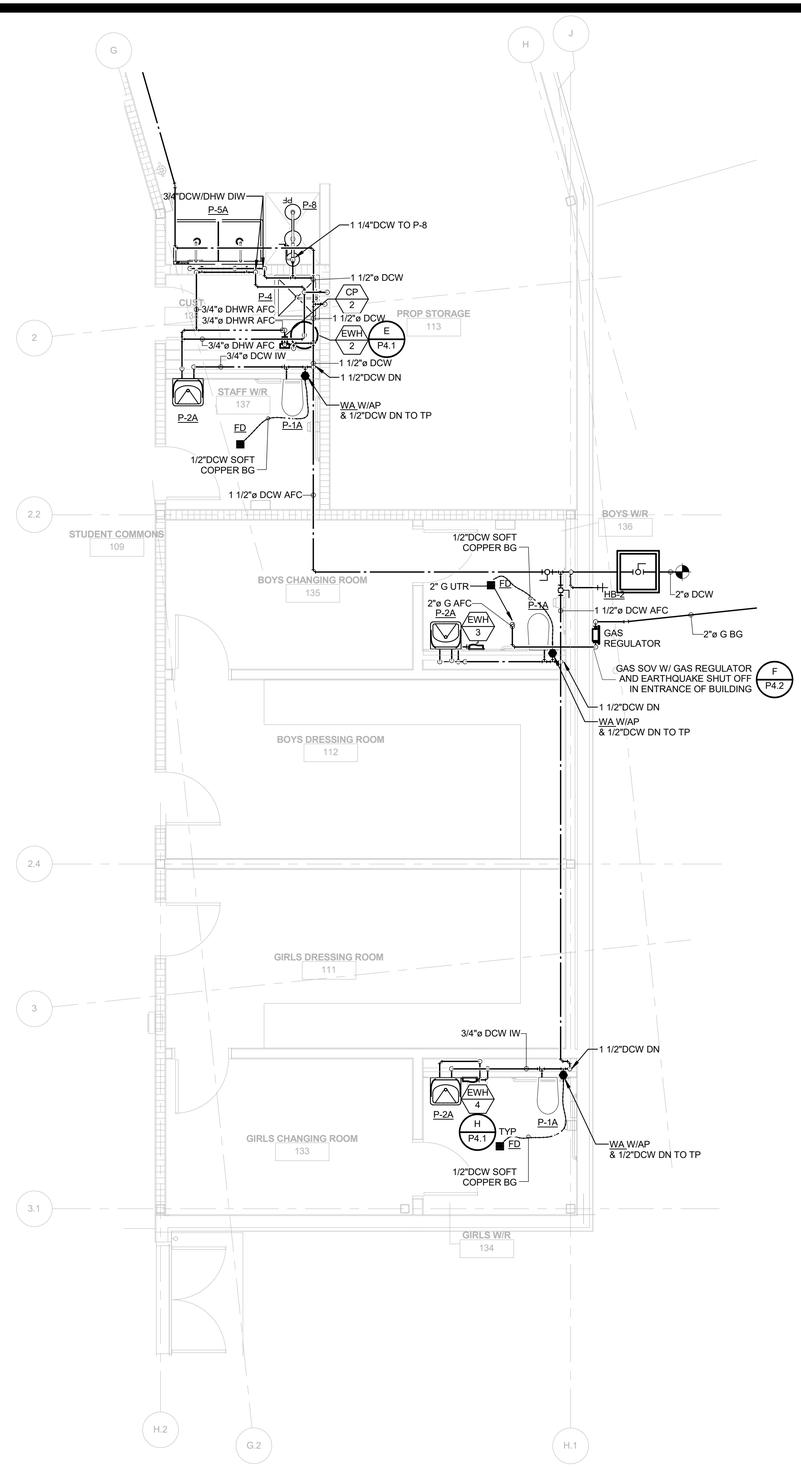

2 W & G ENLARGED PLAN - STAFF W/R1

SCALE: 1/4" = 1'-0"

QUATTROCCHI KWOK ARCHITECTS
Main Office:
636 Fifth Street, Santa Rosa, CA 95404
Pleasanton Office:
600 Main Street, Suite E,
Pleasanton, CA 94566
(707) 576-0829

COSTA ENGINEERS INC.
3274 Villa Lane Napa, CA 94558 ph: 707-252-9177 fax: 707-252-4473

REGISTERED PROFESSIONAL ENGINEER CHRISTOPHER J. DEL CORE NO. 31600 Exp. 12-31-20 MECHANICAL STATE OF CALIFORNIA

FREEDOM HIGH SCHOOL

PERFORMING ARTS AND CTE FACILITIES

1050 NEROLY RD
OAKLEY, CA 94561

LIBERTY UNION HIGH SCHOOL DISTRICT

ARCH PROJECT NO:	1739.00
DRAWN BY:	Author
DRAWING SCALE:	1/4" = 1'-0"
PTN:	61721-0068

BID SET

AUGUST 13, 2019

SHEET TITLE

PLUMBING WATER & GAS ENLARGED PLANS

SHEET NUMBER

P-A3.2

7/17/2019 6:05:26 PM C:\Users\mquevedo\Documents\18036 Freedom HS PAC rvt16_mquevedo@costaengineers.com.rvt

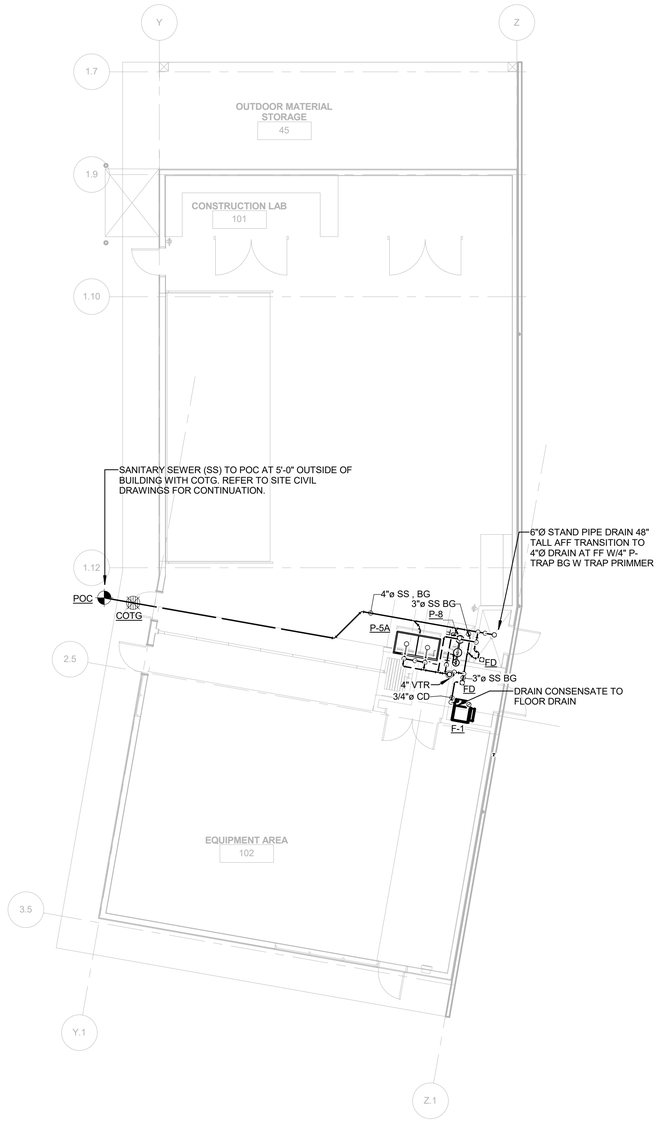

1 **CTE BUILDING WASTE & VENT FLOOR PLAN**

SCALE: 1/8" = 1'-0"

GENERAL NOTES

1. FOR PLUMBING GENERAL NOTES, LEGENDS, AND SYMBOLS, REFER TO SHEET P1.1
2. PLUMBING CONTRACTOR SHALL BE RESPONSIBLE FOR COORDINATING THE PLUMBING WORK WITH OTHER TRADES.
3. SEE ARCHITECTURAL DRAWINGS FOR EXACT LOCATION OF PLUMBING FIXTURES.
4. PROVIDE WALL CLEANOUTS FOR SINKS AND URINALS AS REQUIRED.
5. FOR ACCESSIBLE WATER CLOSETS, LOCATE VALVE HANDLE ON THE ACCESSIBLE SIDE PER ACCESSIBLE REQUIREMENTS.
6. ALL UNDERGROUND AND BELOW SLAB PIPING SHALL BE INSTALLED NO LESS THAN MINIMUM BURY PER CODE. ALL PIPING THROUGH SLAB, BURIED OR UNDERNEATH FOUNDATION SSD

WALL LEGENDS

NOTES:
ALL WOOD FRAMING IS 6" & 4" STUDS, U.O.N., S.S.D.
ALL WALLS TO BE ACOUSTIC , U.O.N.

1 HR FIRE RATED WALL

WOOD FRAMING - NON RATED, INSULATED

QUATTROCCHI KWOK ARCHITECTS
Main Office:
636 Fifth Street, Santa Rosa, CA 95404
Pleasanton Office:
600 Main Street, Suite E,
Pleasanton, CA 94566
(707) 576-0829

COSTA ENGINEERS INC.
3274 Villa Lane Napa, CA 94558 ph: 707.252.9177 fax: 707-252-0473

REGISTERED PROFESSIONAL ENGINEER
CHRISTOPHER J. POE LEVIN
NO. 31500
Exp. 12-31-20
MECHANICAL
STATE OF CALIFORNIA

FREEDOM HIGH SCHOOL

PERFORMING ARTS AND CTE FACILITIES

1050 NEROLY RD
OAKLEY, CA 94561

LIBERTY UNION HIGH SCHOOL DISTRICT

ARCH PROJECT NO:	1739.00
DRAWN BY:	Author
DRAWING SCALE:	1/8" = 1'-0"
PTN:	61721-0068

BID SET

AUGUST 13, 2019

SHEET TITLE

CTE BUILDING WASTE &VENT FLOOR PLAN

SHEET NUMBER

P-B2.1

7/17/2019 6:05:26 PM C:\Users\mquevedo\Documents\18036 Freedom HS PAC rvt16_mquevedo@costaengineers.com.rvt

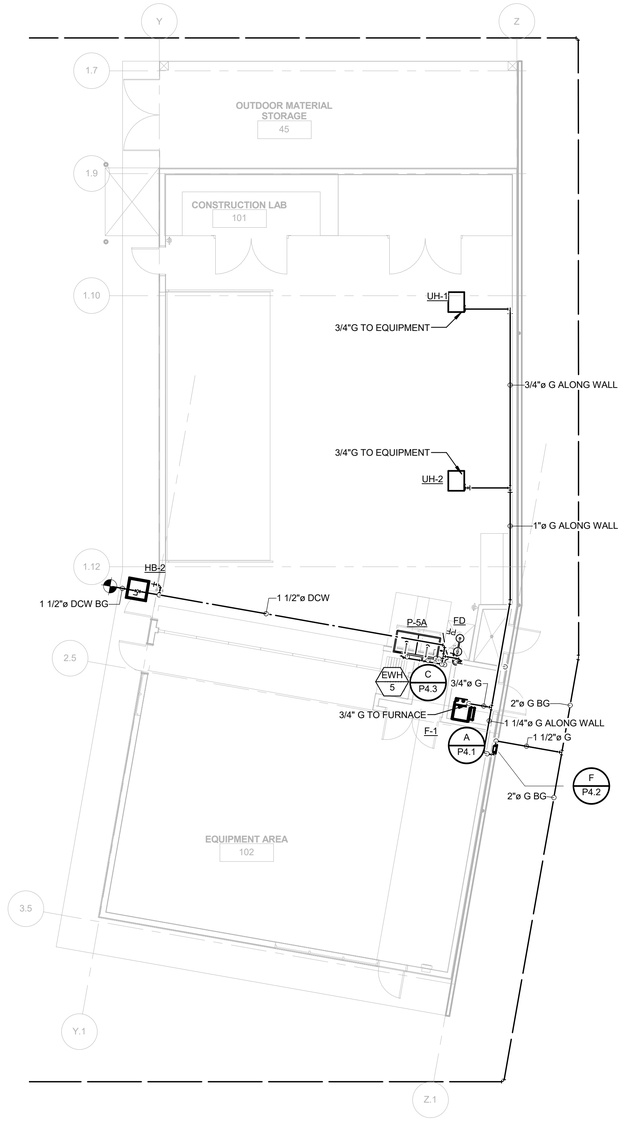

1 **CTE BUILDING WATER & GAS FLOOR PLAN**

SCALE: 1/8" = 1'-0"

QUATTROCCHI KWOK ARCHITECTS

Main Office:
636 Fifth Street, Santa Rosa, CA 95404
Pleasanton Office:
600 Main Street, Suite E,
Pleasanton, CA 94566
(707) 576-0829

COSTA ENGINEERS INC.
3274 Villa Lane Napa, CA 94558 ph: 707-252-9177 fax: 707-252-6473

REGISTERED PROFESSIONAL ENGINEER
CHRISTOPHER J. DEL CORE
NO. 31600
Exp. 12-31-20
MECHANICAL
STATE OF CALIFORNIA

FREEDOM HIGH SCHOOL

PERFORMING ARTS AND CTE FACILITIES

1050 NEROLY RD
OAKLEY, CA 94561

LIBERTY UNION HIGH SCHOOL DISTRICT

ARCH PROJECT NO:	1739.00
DRAWN BY:	Author
DRAWING SCALE:	1/8" = 1'-0"
PTN:	61721-0068

BID SET

AUGUST 13, 2019

SHEET TITLE

CTE BUILDING WATER & GAS FLOOR PLAN

SHEET NUMBER

P-B2.2

7/17/2019 6:05:27 PM C:\Users\mquevedo\Documents\18036 Freedom HS PAC rvt16_mquevedo@costaengineers.com.rvt

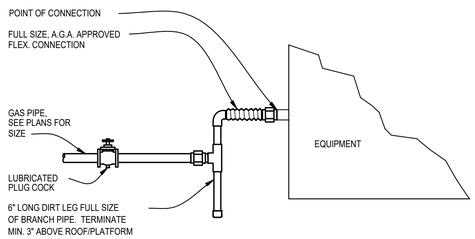

A GAS CONNECTION DETAIL

SCALE: NONE

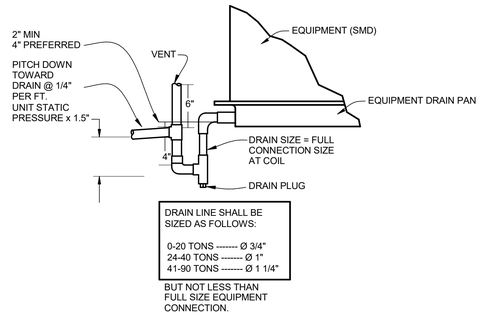

B CONDENSATE CONNECTION DETAIL

SCALE: NONE

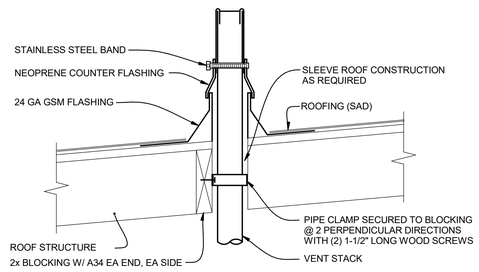

C VENT THRU ROOF DETAIL

SCALE: NONE

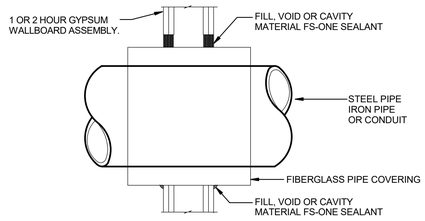

D GAS THRU RATED WALL

SCALE: NONE

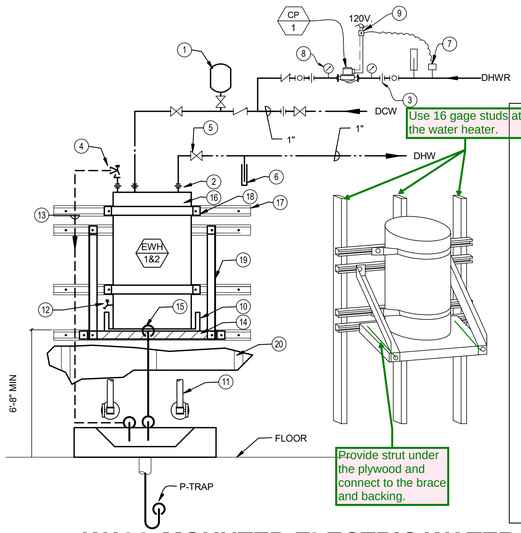

1. AMTROL ST-12 EXPANSION TANK
2. DIELECTRIC UNION (TYPICAL)
3. UNION (TYP.)
4. PRESSURE TEMPERATURE RELIEF VALVE
5. GATE VALVE (TYPICAL)
6. THERMOMETER (TYP)
7. BELL & GOSSETT AQS THERMOSTAT. SET @ 105°
8. PRESSURE GAUGE, (TYPICAL)
9. DISCONNECT SWITCH
10. 2 1/2" DEEP, 24 GA. GALV. SHEET METAL DRAIN PAN. HEM EDGE 1/2"
11. 3/4"DCW/DHW WATER SUPPLY THRU WALL TO JANITORIAL SINK
12. DRAIN VALVE WITH HOSE BIBB CONNECTION
13. FULL SIZE T & PRV DRAIN CONT. DN TO DRAIN INDIRECTLY INTO SERVICE SINK WITH 1" AIR GAP
14. 3/4" THICK PLYWOOD PLATFORM UNDER ENTIRE WATER HEATER & FASTED TO BRACKET
15. 3/4" DRAIN FROM DRAIN PAN. TO DRAIN INDIRECTLY INTO SERVICE SINK MIN. 1" AIR GAP.
16. STORAGE-TYPE, ELECTRIC WATER HEATER. DISTANCE FROM WALL TO WATER HEATER PER CURRENT U.P.C. 9" MIN CLEARANCE TO CEILING (MAX. 140 LBS)
17. B-LINE B-22 STRUT FASTENED TO 3 STUDS WITH (3) #14 SMS AT EA. STUD. SIM C/P4.2
18. WATTS E-100 SEISMIC RESTRAINT T&B SYSTEM FASTENED TO STRUTS WITH 1/2" BOLTS (TYP)
19. WATTS WM-26 HEAVY DUTY WALL MOUNT SYSTEM FASTENED TO STRUTS WITH 1/2" BOLTS
20. METAL STUD BEHIND GYP-BD WALL @16" O.C (TYP)

E WALL MOUNTED ELECTRIC WATER HEATER

SCALE: NONE

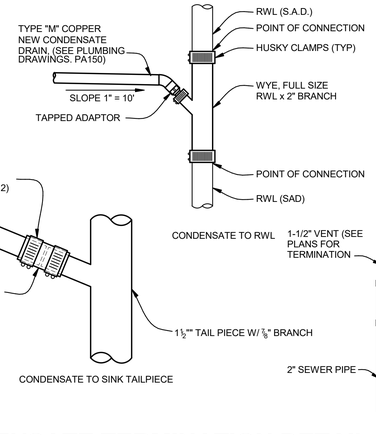

F CONDENSATE TERMINATION DETAIL

SCALE: NONE

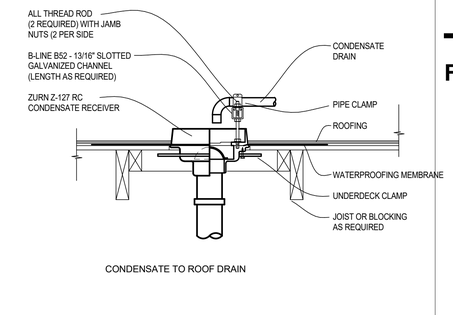

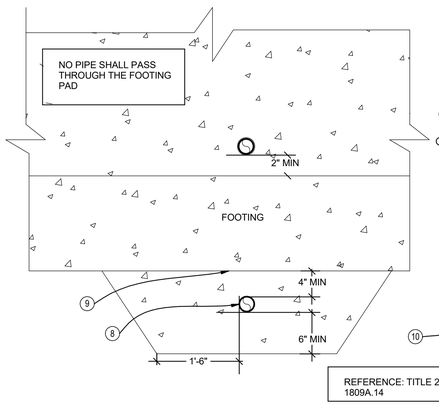

1. REPAIR ASPHALT PAVING OR CONCRETE TO MATCH EXISTING
2. BACK FILL IN 6" LAYERS. EACH LAYER TAMPED TO 95% MAX. DRY DENSITY PER ASTM D-1557-64T
3. WARNING TAP, 6" WIDE MINIMUM
4. UNDISTURBED EARTH
5. CLEAN SAND 6" ABOVE & BELOW PIPE
6. 6" CLEAR ALL AROUND
7. #12 SOLID COPPER TRACER WIRE ALONG ALL NONMETALLIC PIPING. ATTACH TO PIPE W/ "TY-WRAP" @ "TY-WRAP 8'-0" O.C.
8. PLACE CONCRETE FILL AROUND SLEEVES BEFORE POURING FOOTING PADS. FILL SHALL BE SAME WIDTH AS FOOTING AND FULL PLACE CONCRETE FILL.
9. POUR JOINT
10. PROVIDE METAL SLEEVES WITH I.D. 2"GREATER THAN THE O.D. OF THE PIPE.

G PIPE TRENCH DETAIL

SCALE: NONE

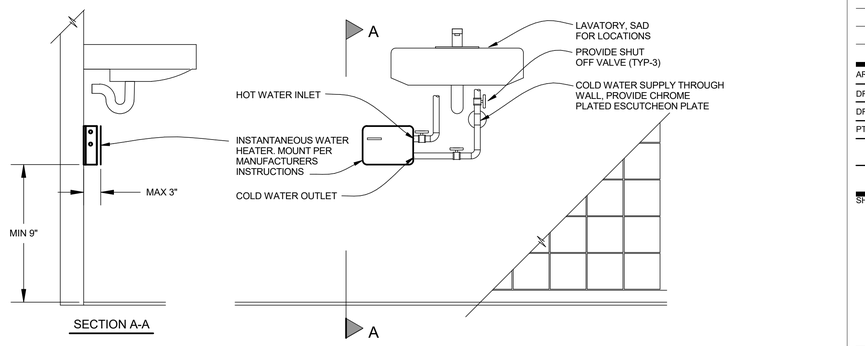

H POINT OF USE WATER HEATER DETAIL

SCALE: NONE

QUATTROCCHI KWOK ARCHITECTS
Main Office:
636 Fifth Street, Santa Rosa, CA 95404
Pleasanton Office:
600 Main Street, Suite E,
Pleasanton, CA 94566
(707) 576-0829

COSTA ENGINEERS INC.
3274 Villa Lane Napa, CA 94558 ph: 707.252.9177 fax: 707.252.0473
REGISTERED PROFESSIONAL ENGINEER CHRISTOPHER J. POE LICENSE NO. 31500 Exp. 12-31-20 MECHANICAL STATE OF CALIFORNIA

FREEDOM HIGH SCHOOL

PERFORMING ARTS AND CTE FACILITIES

1050 NEROLY RD
OAKLEY, CA 94561

LIBERTY UNION HIGH SCHOOL DISTRICT

ARCH PROJECT NO:	1739.00
DRAWN BY:	Author
DRAWING SCALE:	
PTN:	61721-0068

BID SET

AUGUST 13, 2019

SHEET TITLE

PLUMBING DETAILS

SHEET NUMBER

P4.1

7/17/2019 6:05:16 PM C:\Users\mquevedo\Documents\18036 Freedom HS PAC rvt16_mquevedo@costaengineers.com.rvt

NOTES:

1. RUN PIPING TRAPEZE AS CLOSE AS POSSIBLE TO STRUCTURE.
2. SUPPORT PIPING AT A MAXIMUM OF 8'-0" INTERVALS.
3. SEE PLANS FOR PIPE SIZES.
4. CHANNEL DEFLECTION SHALL NOT EXCEED 1/360 OF THE SPAN BETWEEN RODS. DOUBLE-UP CHANNELS AS REQUIRED.
5. NO BRACING IS REQUIRED ON GAS PIPES WITH LESS THAN 1" I.D., ALL OTHER PIPES LESS THAN 2-1/2" IN DIAMETER, AND WHEN SUPPORTED LESS THAN 12" FROM BOTTOM OF BLDG STRUCTURE.

TRAPEZE LOAD & SUPPORT CONDITIONS:

MAXIMUM LOAD PER TRAPEZE 240 POUNDS.

MINIMUM ROD SIZES (INCHES)	PIPE DIAMETER (INCHES)
3/8"	2" & SMALLER PIPE
1/2"	2-1/2" & 3" PIPE

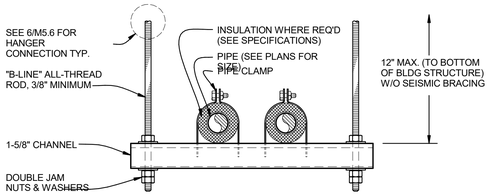

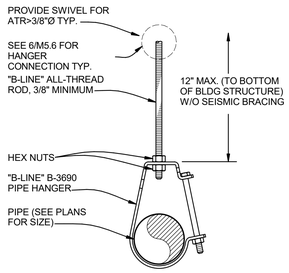

A TYPICAL PIPE HANGER DETAILS

SCALE: NONE

NOTES:

1. RUN PIPING TRAPEZE AS CLOSE AS POSSIBLE TO STRUCTURE.
2. SUPPORT PIPING AT A MAXIMUM OF 8'-0" INTERVALS.
3. SEE PLANS FOR PIPE SIZES.
4. CHANNEL DEFLECTION SHALL NOT EXCEED 1/360 OF THE SPAN BETWEEN RODS. DOUBLE-UP CHANNELS AS REQUIRED.
5. PROVIDE "B-LINE" CHANNEL ROD STIFFENER @ ALL-THREAD WHERE DIAGONAL BRACE OCCURS. INCLUDE SC228 ASSEMBLY AS RECOMMENDED BY MANUFACTURER.
6. NO BRACING IS REQUIRED ON GAS PIPES WITH LESS THAN 1" I.D., AND ALL OTHER PIPES LESS THAN 2-1/2" IN DIAMETER.

TRAPEZE LOAD & SUPPORT CONDITIONS:

MAXIMUM LOAD 240 POUNDS PER TRAPEZE.

TABLE-1	
ANGLE (INCHES)	MAX LENGTH (INCHES)
1-1/2 x 1-1/2 x 1/8	3'-0"
2 x 2 x 3/16	6'-0"
3 x 3 x 1/4	8'-0"

MINIMUM ROD SIZES (INCHES)	PIPE DIAMETER (INCHES)
3/8"	2" & SMALLER PIPE
1/2"	2-1/2" & 3" PIPE
5/8"	4" PIPE

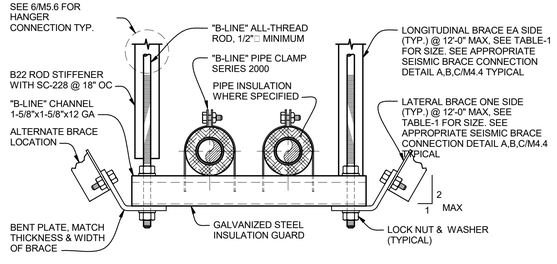

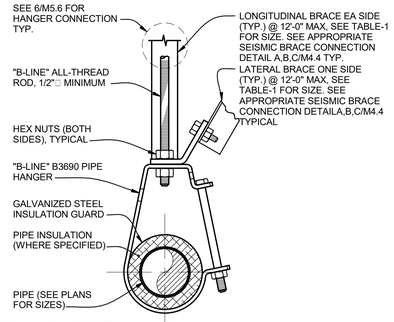

B TYPICAL PIPE HANGER W/ SEISMIC BRACING DETAILS

SCALE: NONE

MAX LOAD FOR STRUCTURAL ATTACHMENT:

TOLCO 109A	
SIZE (INCHES)	MAX LOAD (LBS)
3/8"	526
1/2"	579
5/8"	715

B-LINE B3034	
SIZE (INCHES)	MAX LOAD (LBS)
3/8"	610
1/2"	750
5/8"	750

STRONG-BOLT 2		
SIZE (INCHES)	MAX LOAD (LBS)	MIN EMBED. (INCHES)
3/8"	1040	2"
1/2"	2040	2 3/4"
5/8"	2615	3 3/8"

TOLCO BC-17A
MAX LOAD (LBS)
1200

ALL THREAD ROD SIZING AND HANGER SPACING:

HANGER CHART	
PIPE DIAMETER (INCHES)	MINIMUM ROD SIZES (INCHES)
2" & SMALLER PIPE	3/8"
2-1/2" & 3" PIPE	1/2"
4" PIPE	5/8"

SCHD 40 STEEL (GAS)		
SIZE (INCHES)	MAX HANGER SPACING	SPAN WEIGHT (LBS)
1/2"	6'	4.8
3/4"	8'	8.8
1"	8'	13.6
1 1/4"	10'	23
1 1/2"	10'	27
2"	10'	36
2 1/2"	10'	58
3"	10'	76

TYPE L COPPER (DOMESTIC WATER)		
SIZE (INCHES)	MAX HANGER SPACING	SPAN WEIGHT (LBS)
1/2"	6'	2.3
3/4"	6'	4.0
1"	6'	6.0
1 1/4"	6'	8.5
1 1/2"	6'	11.5
2"	10'	30.9
2 1/2"	10'	45.4
3	10'	62.8

CAST IRON SOIL PIPE (WASTE/RWL)		
SIZE (INCHES)	MAX HANGER SPACING	SPAN WEIGHT (LBS)
1 1/2"	10'	62
2"	10'	86
3"	10'	135
4"	10'	202

GENERAL NOTES:

1. HANGER SPACING PER SPEC 23 00 00 SECTION 3.10C.

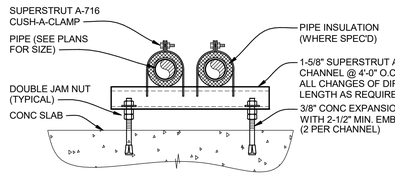

E PIPE SUPPORT DETAIL ON SLAB

SCALE: NONE

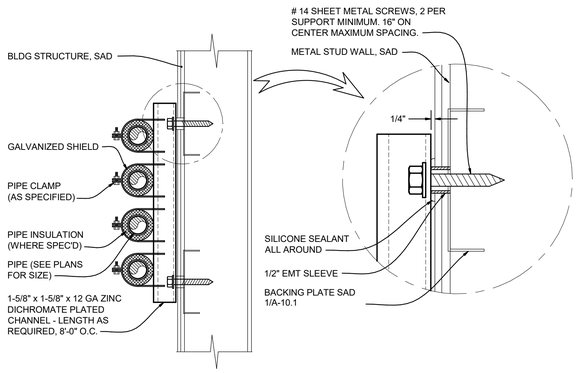

@ METAL STUD WALL

C PIPE SUPPORT DETAIL ON WALL

SCALE: NONE

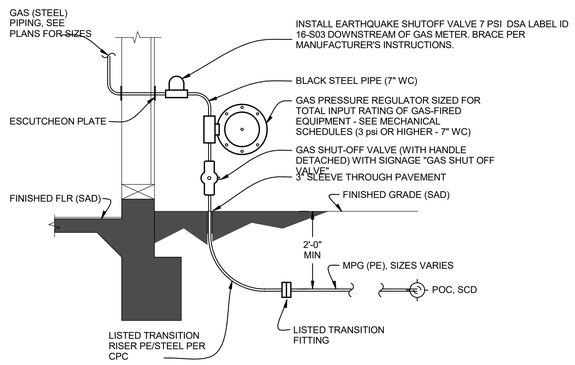

F GAS PRESSURE RELIEF & SHUTOFF VALVE DETAIL

SCALE: NONE

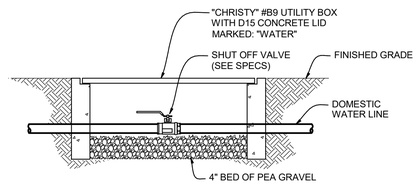

G DOMESTIC WATER SHUT-OFF DETAIL

SCALE: NONE

H NOT USED

SCALE: NTS

D SEE HANGER & THREAD ROD SIZE TABLES

SCALE: NONE

QUATTROCCHI KWOK ARCHITECTS
Main Office:
636 Fifth Street, Santa Rosa, CA 95404
Pleasanton Office:
600 Main Street, Suite E,
Pleasanton, CA 94566
(707) 576-0829

COSTA ENGINEERS INC.
3274 Villa Lane Napa, CA 94558 ph: 707.252.9177 fax: 707-252-0473
REGISTERED PROFESSIONAL ENGINEER CHRISTOPHER J. POE, CEM NO. 31500 Exp. 12-31-20 MECHANICAL STATE OF CALIFORNIA

FREEDOM HIGH SCHOOL

PERFORMING ARTS AND CTE FACILITIES

1050 NEROLY RD
OAKLEY, CA 94561

LIBERTY UNION HIGH SCHOOL DISTRICT

ARCH PROJECT NO:	1739.00
DRAWN BY:	Author
DRAWING SCALE:	
PTN:	61721-0068

BID SET

AUGUST 13, 2019

SHEET TITLE

PLUMBING DETAILS

SHEET NUMBER

P4.2

7/17/2019 6:05:16 PM C:\Users\mquevedo\Documents\18038 Freedom HS PAC rvt16_mquevedo@costaengineers.com.rvt

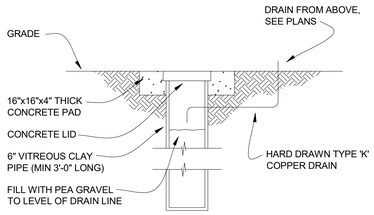

A DRYWELL DETAIL

SCALE: NONE

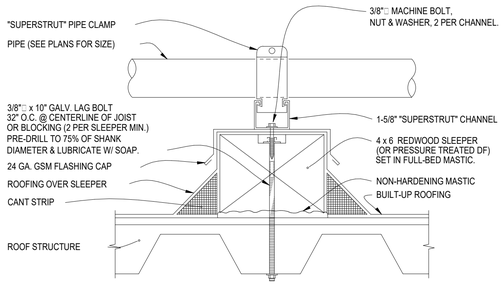

NOTE: SUPPORTS SHALL BE PLACED 8'-0" ON CENTER (MAX.) AND AT ALL CHANGES IN DIRECTION.

B PIPE MOUNTING ON ROOF DETAIL

SCALE: NONE

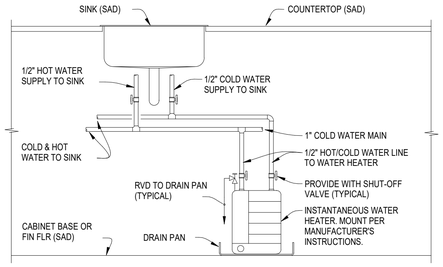

MULTIPLE SINKS

C WATER HEATER UNDER SINK DETAIL

SCALE: NONE

QUATTROCCHI KWOK ARCHITECTS
Main Office:
636 Fifth Street, Santa Rosa, CA 95404
Pleasanton Office:
600 Main Street, Suite E,
Pleasanton, CA 94566
(707) 576-0829

COSTA ENGINEERS INC.
3274 Villa Lane Napa, CA 94558 ph: 707-252-9177 fax: 707-252-6473

REGISTERED PROFESSIONAL ENGINEER
CHRISTOPHER J. DEL CORE
NO. 31600
Exp. 12-31-20
MECHANICAL
STATE OF CALIFORNIA

FREEDOM HIGH SCHOOL

PERFORMING ARTS AND CTE FACILITIES

1050 NEROLY RD
OAKLEY, CA 94561

LIBERTY UNION HIGH SCHOOL DISTRICT

ARCH PROJECT NO:	1739.00
DRAWN BY:	Author
DRAWING SCALE:	
PTN:	61721-0068

BID SET

AUGUST 13, 2019

SHEET TITLE

PLUMBING DETAILS

SHEET NUMBER

P4.3

7/17/2019 6:05:16 PM C:\Users\mquevedo\Documents\18036 Freedom HS PAC rvt16_mquevedo@costaengineers.com.rvt

FREEDOM HS PERFORMING ARTS CENTER AND CTE – 218054

Use the current DSA notes attached to original review set. and recommend option 2.

ELECTRICAL EQUIPMENT ANCHORAGE

ELECTRICAL ANCHORAGE NOTES:

ALL ELECTRICAL COMPONENTS SHALL BE ANCHORED AND INSTALLED PER THE DETAILS ON THE DSA APPROVED CONSTRUCTION DOCUMENTS. WHERE NO DETAIL IS INDICATED, THE FOLLOWING COMPONENTS SHALL BE ANCHORED OR BRACED TO MEET THE FORCE AND DISPLACEMENT REQUIREMENTS PRESCRIBED IN THE 2016 CBC, SECTIONS 1616A.1.18 THROUGH 1616A.1.26 AND ASCE 7-10, CHAPTER 13, 26, AND 30.

1. ALL PERMANENT EQUIPMENT AND COMPONENTS.
2. TEMPORARY OR MOVABLE EQUIPMENT THAT IS PERMANENTLY ATTACHED (e.g. HARD WIRED) TO THE BUILDING UTILITY SERVICES SUCH AS ELECTRICITY, GAS OR WATER.
3. MOVABLE EQUIPMENT WHICH IS STATIONED IN ONE PLACE FOR MORE THAN 8 HOURS AND HEAVIER THAN 400 POUNDS OR HAS A CENTER OF MASS LOCATED 4 FEET OR MORE ABOVE THE ADJACENT FLOOR OR ROOF LEVEL THAT DIRECTLY SUPPORT THE COMPONENT ARE REQUIRED TO BE ANCHORED WITH TEMPORARY ATTACHMENTS.

THE FOLLOWING ELECTRICAL SHALL BE BE POSITIVELY ATTACHED TO THE STRUCTURE, BUT THE ATTACHMENT NEED NOT BE DETAILED ON THE PLANS. THESE COMPONENTS SHALL HAVE FLEXIBLE CONNECTIONS PROVIDED BETWEEN THE COMPONENT AND ASSOCIATED CONDUIT.

A. COMPONENTS WEIGHING LESS THAN 400 POUNDS AND HAVE A CENTER OF MASS LOCATED 4 FEET OR LESS ABOVE THE ADJACENT FLOOR OR ROOF LEVEL THAT DIRECTLY SUPPORT THE COMPONENT.
B. COMPONENTS WEIGHING LESS THAN 20 POUNDS, OR IN THE CASE OF DISTRIBUTED SYSTEMS, LESS THAN 5 POUNDS PER FOOT, WHICH ARE SUSPENDED FROM A ROOF OR FLOOR OR HUNG FROM WALL.

FOR THOSE ELEMENTS THAT DO NOT REQUIRE DETAILS ON THE APPROVED DRAWINGS, THE INSTALLATION SHALL BE SUBJECT TO THE APPROVAL OF THE DESIGN PROFESSIONAL IN GENERAL RESPONSIBLE CHARGE OR STRUCTURAL ENGINEER DELEGATED RESPONSIBILITY AND THE DSA DISTRICT STRUCTURAL ENGINEER. THE PROJECT INSPECTOR WILL VERIFY THAT ALL COMPONENTS AND EQUIPMENT HAVE BEEN ANCHORED IN ACCORDANCE WITH THE ABOVE REQUIREMENTS.

ELECTRICAL DISTRIBUTION SYSTEM BRACING NOTE:

ELECTRICAL DISTRIBUTION SYSTEMS SHALL BE BRACED TO COMPLY WITH THE FORCES AND DISPLACEMENTS PRESCRIBED IN ASCE 7-10 SECTION 13.3 AS DEFINED IN ASCE 7-10 SECTION 13.6.5.6, 13.6.7, 13.6.8, AND 2016 CBC, SECTIONS 1616A.1.24, 1616A.1.25, AND 1616A.1.26.

THE METHOD OF SHOWING BRACING AND ATTACHMENTS TO THE STRUCTURE FOR THE IDENTIFIED DISTRIBUTION SYSTEM ARE AS NOTED BELOW. WHEN BRACING AND ATTACHMENTS ARE BASED ON A PREAPPROVED INSTALLATION GUIDE (eg., SMACNA OR OSHPD OPM), COPIES OF THE BRACING SYSTEM INSTALLATION GUIDE OR MANUAL SHALL BE AVAILABLE ON THE JOBSITE PRIOR TO THE START OF AND DURING THE HANGING AND BRACING OF THE DISTRIBUTION SYSTEMS. THE STRUCTURAL ENGINEER OF RECORD SHALL VERIFY THE ADEQUACY OF THE STRUCTURE TO SUPPORT THE HANGER AND BRACE LOADS.

ELECTRICAL DISTRIBUTION SYSTEMS ARE: DETAILED ON THE APPROVED DRAWINGS WITH PROJECT SPECIFIC NOTES AND DETAILS.

LUMINAIRES:

ALL LUMINAIRES SHALL BE POSITIVELY ATTACHED TO THE CEILING SUSPENSION SYSTEMS BY MECHANICAL MEANS TO RESIST A HORIZONTAL FORCE EQUAL TO THE WEIGHT OF THE LUMINAIRE. A MINIMUM OF TWO SCREWS OR APPROVED FASTENERS ARE REQUIRED AT EACH LUMINAIRE, PER ASTM E580, SECTION 5.3.1.

SURFACE-MOUNTED LUMINAIRES SHALL BE ATTACHED TO THE MAIN RUNNER WITH AT LEAST TWO POSITIVE CLAMPING DEVICES. THE CLAMPING DEVICE SHALL COMPLETELY SURROUND THE SUPPORTING CEILING RUNNER AND BE MADE OF STEEL WITH A MINIMUM THICKNESS OF #14 GAGE. ROTATIONAL SPRING CATCHES DO NOT COMPLY. A #12 GAGE SLACK SAFETY WIRE SHALL BE CONNECTED FROM EACH CLAMPING DEVICE TO THE STRUCTURE ABOVE. PROVIDE ADDITIONAL SUPPORTS WHEN LUMINAIRES ARE EIGHT (8) FEET OR LONGER OR EXCEED 56 LB. MAXIMUM SPACING BETWEEN SUPPORTS SHALL NOT EXCEED EIGHT (8) FEET.

LUMINAIRES WEIGHING LESS THAN OR EQUAL TO 10 LB. SHALL HAVE A MINIMUM OF ONE (1) #12 GAGE SLACK SAFETY WIRE CONNECTED FROM THE LUMINAIRE HOUSING TO THE STRUCTURE ABOVE.

LUMINAIRES WEIGHING GREATER THAN 10 LB. BUT LESS THAN OR EQUAL TO 56 LBS. MAY BE SUPPORTED DIRECTLY ON THE CEILING RUNNERS, BUT THEY SHALL HAVE A MINIMUM OF TWO (2) #12 GAGE SLACK SAFETY WIRES CONNECTED FROM THE LUMINAIRE HOUSING AT DIAGONAL CORNERS TO THE STRUCTURE ABOVE. EXCEPTION: ALL LUMINAIRES GREATER THAN TWO BY FOUR FEET WEIGHING LESS THAN 56 LBS. SHALL HAVE A #12 GAGE SLACK SAFETY WIRE AT EACH CORNER.

ALL LUMINAIRES WEIGHING GREATER THAN 56 LB. SHALL BE INDEPENDENTLY SUPPORTED BY NOT LESS THAN FOUR (4) TAUT #12 GAGE HANGER WIRES (ONE AT EACH CORNER) ATTACHED FROM THE LUMINAIRE HOUSING TO THE STRUCTURE ABOVE OR OTHER APPROVED HANGERS. THE FOUR (4) TAUT #12 GAGE WIRES OR OTHER APPROVED HANGERS, INCLUDING THEIR ATTACHMENT TO THE STRUCTURE ABOVE, SHALL BE CAPABLE OF SUPPORTING FOUR (4) TIMES THE WEIGHT OF THE LUMINAIRE.

GENERAL DEMOLITION NOTES

1. THE CONTRACTOR SHALL VERIFY IN THE FIELD ALL LINES, LEVELS, DIMENSIONS AND EXISTING CONDITIONS. THE INFORMATION ON THE DRAWINGS REGARDING EXISTING ELECTRICAL EQUIPMENT AND BRANCH CIRCUITS IS THE RESULT OF FIELD SURVEY AND IS ACCURATE TO THE BEST OF OUR KNOWLEDGE. IT IS INTENDED, HOWEVER, AS A GUIDE FOR USE IN VERIFICATION ONLY.
2. ANY EXISTING ELECTRICAL EQUIPMENT IN THE AREA OF NEW CONSTRUCTION NOT SHOWN ON THE EXISTING PLANS SHALL BE DOCUMENTED AND SUBMITTED TO THE ENGINEER FOR DETERMINATION OF ACTION REQUIRED.
3. WHEREVER THE REMOVAL OF EXISTING ELECTRICAL EQUIPMENT IS CALLED FOR AND ALL EQUIPMENT ON A PARTICULAR BRANCH CIRCUIT IS TO BE REMOVED, ALL CONDUIT AND WIRE BACK TO THE PANEL SHALL BE ENTIRELY REMOVED AND THE CIRCUIT IN PANEL SHALL BE MARKED "SPARE". THIS APPLIES TO SIGNAL AND COMMUNICATIONS SYSTEMS EQUIPMENT, CONDUIT, AND WIRE AS WELL.
4. WHEREVER THE REMOVAL OF EXISTING ELECTRICAL EQUIPMENT IS CALLED FOR AND ALL EQUIPMENT ON A PARTICULAR BRANCH CIRCUIT IS NOT TO BE REMOVED, THE CIRCUIT SHALL BE MAINTAINED CONTINUOUS TO THE EXISTING EQUIPMENT IN USE WITH MINIMUM INTERRUPTIONS OF POWER. THIS APPLIES TO SIGNAL AND COMMUNICATIONS SYSTEMS EQUIPMENT, CONDUIT, AND WIRE AS WELL.
5. WHENEVER THE REMOVAL OF EXISTING CONSTRUCTION REVEALS ELECTRICAL WORK THAT IS TO REMAIN, BUT IS IN CONFLICT WITH NEW CONSTRUCTION, RELOCATE THE EXISTING ELECTRICAL WORK AS NECESSARY TO AVOID ANY CONFLICT. RELOCATION WORK SHALL BE DONE TO MINIMIZE ANY INTERRUPTIONS OF POWER.
6. CARE SHALL BE TAKEN IN ORDER TO IDENTIFY AND PROTECT ALL EXISTING ELECTRICAL WORK THAT IS TO REMAIN.
7. ENSURE RECONNECTION OF EXISTING DEVICES WHOSE CIRCUITS HAVE BEEN INTERRUPTED BY DEMOLITION BY PROVIDING NEW CONNECTION TO ANOTHER EXISTING TO REMAIN DEVICE OR PANEL.
8. ALL EXISTING ELECTRICAL EQUIPMENT SHOWN ON THE PLANS FOR NEW WORK ARE THOSE WHICH ARE TO BE REUSED DURING SOME PHASE OF THE NEW CONSTRUCTION OR REQUIRE SOME SPECIAL CONSIDERATIONS.
9. WHENEVER THE REMOVAL OF EXISTING ELECTRICAL PANELBOARDS ARE CALLED FOR AND ALL EXISTING BRANCH CIRCUITS ARE NOT TO BE REMOVED, THE EXISTING BRANCH CIRCUITS SHALL BE CONNECTED TO OTHER EXISTING ELECTRICAL EQUIPMENT OR PANELS STILL IN USE WITH MINIMUM INTERRUPTIONS OF POWER. ALSO, IF REQUIRED, THESE SAME BRANCH CIRCUITS SHALL BE RECONNECTED TO RELOCATED EXISTING OR NEW PANELBOARDS AS PART OF THE NEW CONSTRUCTION. THIS APPLIES TO SIGNAL AND COMMUNICATIONS SYSTEMS EQUIPMENT, CONDUIT AND WIRE AS WELL.
10. THE ELECTRICAL CONTRACTOR SHALL REVISE EXISTING PANEL SCHEDULES TO CORRESPOND TO ACTUAL CONDITIONS AFTER ALL DEMOLITION AND NEW WORK IS COMPLETED.
11. REMOVE ALL ABANDONED CONDUIT AND WIRE ABOVE CEILINGS.
12. WHEN ELECTRICAL EQUIPMENT OR DEVICE IS REMOVED FROM AN EXISTING WALL OR CEILING WHICH IS TO REMAIN, PATCH ABANDONED OPENINGS TO MATCH EXISTING FINISH.
13. IN GENERAL, THE DEMOLITION PLANS SHOW ALL EXISTING EQUIPMENT THAT IS TO BE REMOVED UNLESS NOTED OTHERWISE. HOWEVER, ELECTRICAL EQUIPMENT, WHETHER SHOWN ON THIS DRAWING OR NOT, WHERE LOCATED IN THE AREA SCHEDULED TO BE DEMOLISHED, SHALL BE REMOVED COMPLETELY (INCLUDING CONDUIT AND WIRES BACK TO THE LAST REMAINING LUMINAIRE, OUTLET, DEVICE, ETC.) UNLESS OTHERWISE NOTED. COORDINATE DEMOLITION WORK WITH ARCHITECT AND GENERAL CONTRACTOR.
14. EXISTING CONDUIT FEEDS UP THROUGH FLOOR SHALL BE CUT OFF AND PLUGGED FLUSH WITH FLOOR WHERE EXISTING WALLS, ETC., ARE REMOVED. REMOVE CONDUCTORS FROM THE POINT BACK TO LAST OUTLET REMAINING IN SERVICE.
15. IT SHALL BE THE RESPONSIBILITY OF THIS CONTRACTOR TO MAINTAIN CONTINUITY OF ALL ELECTRICAL SYSTEMS, EQUIPMENT, ETC. REMAINING IN OPERATION WHICH IS BEING FED BY AN ABANDONED OUTLET. MAINTAINING CONTINUITY SHALL CONSIST OF REROUTING OF CONDUIT, WIRE, ETC. AS REQUIRED.
16. IT SHALL BE THIS CONTRACTOR'S RESPONSIBILITY TO VERIFY LOCATIONS OF EXISTING CIRCUITS AND ADJUST CIRCUIT NUMBERS ACCORDING TO EXISTING CONDITIONS IF REQUIRED
17. THE ELECTRICAL CONTRACTOR SHALL COORDINATE WITH THE OWNER PRIOR TO REMOVAL OF EXISTING ELECTRICAL EQUIPMENT AND TURN OVER REMOVED EQUIPMENT THAT THE OWNER REQUESTS, IN AS-FOUND CONDITION. EQUIPMENT THAT IS TO BE TURNED OVER SHALL BE BOXED AND TAGGED TO IDENTIFY THE SPECIFIC EQUIPMENT. EQUIPMENT TO BE TEMPORARILY REMOVED DUE TO THE CONSTRUCTION SHALL BE CLEANED AND RE-INSTALLED IN ITS ORIGINAL CONDITION OR AS REQUIRED.
18. WHERE EXISTING WALLS HAVE BEEN REMOVED, AND THERE ARE EXISTING CONDUIT FEEDS WHICH HAVE BEEN CUT OFF AND CAPPED FLUSH WITH THE FLOOR, IT IS THE CONTRACTOR'S RESPONSIBILITY TO IDENTIFY AND DIMENSION ALL SUCH CONDUITS ON THE "AS-BUILT" DRAWINGS.
19. IF ANY EQUIPMENT THAT IS SCHEDULED TO REMAIN IN OPERATION IS DAMAGED BY THE CONTRACTOR, IT SHALL BE REPLACED TO ITS ORIGINAL CONDITION SATISFACTORY TO THE OWNER AT CONTRACTOR'S EXPENSE.

SYMBOLS LIST

- FIRE ALARM MAGNETIC DOOR HOLD-OPEN
- WALL-MOUNTED BEAM SMOKE DETECTOR - TRANSMITTING UNIT; MOUNT 18" BELOW CEILING LEVEL, U.O.N.
- WALL-MOUNTED BEAM SMOKE DETECTOR - RECEIVING UNIT; MOUNT IN EXACT HORIZONTAL & VERTICAL ALIGNMENT WITH CORRESPONDING TRANSMITTING UNIT
- CEILING-MOUNTED BEAM SMOKE DETECTOR - TRANSMITTING UNIT
- CEILING-MOUNTED BEAM SMOKE DETECTOR - RECEIVING UNIT; MOUNT IN EXACT HORIZONTAL & VERTICAL ALIGNMENT WITH CORRESPONDING TRANSMITTING UNIT
- FIRE ALARM SYSTEM END-OF-LINE RESISTOR
- FSD — FIRE SMOKE DAMPER BY MECHANICAL. COORDINATE WITH MECHANICAL FOR MONITORING TO FIRE ALARM SYSTEM (INCLUDING SMOKE DETECTOR PROVISIONS). CONTROL OF DAMPER TO BE BY MECHANICAL, U.O.N. PROVIDE TOGGLE TYPE DISCONNECT SWITCH
- FACP — FIRE ALARM CONTROL PANEL
- FAAP — FIRE ALARM ANNUNCIATOR PANEL
- WEATHERPROOF ENCLOSURE
- CONDUIT AND WIRE CONCEALED IN CEILING OR WALL
- CONDUIT AND WIRE CONCEALED IN OR UNDER SLAB OR UNDERGROUND
- CONDUIT AND WIRE RUN EXPOSED
- CROSSMARKS INDICATE QUANTITY OF #12 CONDUCTORS PLUS NEC SIZED GROUND CONDUCTOR, NO HASHMARKS INDICATES (2)#12 CONDUCTORS PLUS (1)#12 GROUND CONDUCTOR, U.O.N.
  - GROUND WIRE
  - SHORT CROSSMARK(S) INDICATE PHASE CONDUCTOR(S); LONG CROSSMARK(S) INDICATE NEUTRAL CONDUCTOR(S)
- {#10} — WIRE SIZE 10 AWG FOR ALL CONDUCTORS, INCLUDING GROUND WIRE, THROUGHOUT THE COMPLETE CIRCUIT
- FLEXIBLE METALLIC CONDUIT
- HOMERUN TO PANELBOARD OR TERMINAL BOARD, AS NOTED ON PLANS
- COMPLETE CONNECTION OF EQUIPMENT
- CONDUIT STUBBED OUT, CAPPED AND MARKED
- CONDUIT TURNED UP
- CONDUIT TURNED DOWN
- #4/0 COPPER GROUNDING ELECTRODE CONDUCTOR, U.O.N.
- (AC-1) — MECHANICAL EQUIPMENT DESIGNATION - SEE MECHANICAL PLANS
- (FA1) — LUMINAIRE TYPE - SEE LUMINAIRE SCHEDULE
- (3 / E-6) — DETAIL DESIGNATION - SEE DETAIL 3, SHEET E-6
- (1) — NUMBERED SHEET NOTE

ABBREVIATIONS

A.F.F.	ABOVE FINISHED FLOOR
C	CONDUIT
CATV	CABLE TV
C.O.	CONDUIT ONLY
CU	COPPER
E.C.	ELECTRICAL CONTRACTOR
E	EMERGENCY LUMINAIRE ON EMERGENCY GENERATOR OR INVERTER, SWITCHABLE, U.O.N.
EM	EMERGENCY LUMINAIRE WITH BATTERY PACK, SWITCHABLE
EMS	ENERGY MANAGEMENT SYSTEM
(E)	EXISTING
EQUIP	EQUIPMENT
(ER)	EXISTING EQUIPMENT TO BE RELOCATED
(EX)	EXISTING EQUIPMENT TO BE DISCONNECTED AND REMOVED
EXT.	EXTERIOR
GFI	GROUND FAULT CIRCUIT INTERRUPTING TYPE RECEPTACLE
IDF	INTERMEDIATE DISTRIBUTION FRAME
L	LOCKABLE
LV	LOW VOLTAGE
MCB	MAIN CIRCUIT BREAKER
MDF	MAIN DISTRIBUTION FRAME
MFR	MANUFACTURER
MLO	MAIN LUGS ONLY
MTD	MOUNTED
(N)	NEW
N.E.C.	NATIONAL ELECTRICAL CODE
NEU.	NEUTRAL
N.I.E.C.	NOT IN ELECTRICAL CONTRACT
NL	NIGHT LIGHT LUMINAIRE ON 24 HOURS
O.A.H.	OVERALL HEIGHT
O.F.C.I.	OWNER FURNISHED, CONTRACTOR INSTALLED
P	INDICATES LUMINAIRES ON PHOTOCELL CONTROL
PA	PUBLIC ADDRESS
PNL	PANEL
S.A.D.	SEE ARCHITECTURAL DRAWINGS
STC	SIGNAL TERMINAL CABINET
TC	INDICATES LUMINAIRES ON TIMECLOCK CONTROL
TELE	TELEPHONE
TVSS	TRANSIENT VOLTAGE SURGE SUPPRESSION
U.O.N.	UNLESS OTHERWISE NOTED
VAV	VAV BOX, SEE MECHANICAL DIVISION DRAWINGS FOR LOCATIONS. PROVIDE TOGGLE TYPE DISCONNECT SWITCH
WP	WEATHER PROOF, NEMA 3R
WPIU	WEATHER PROOF IN USE

SYMBOLS LIST

- MAIN SWITCHBOARD, DISTRIBUTION PANEL OR MOTOR CONTROL CENTER
- FLUSH MOUNTED PANELBOARD, 6'-6" TO TOP
- SURFACE MOUNTED PANELBOARD, 6'-6" TO TOP
- FUSED EQUIPMENT DISCONNECT SWITCH WITH FUSE SIZE AS RECOMMENDED BY EQUIPMENT MANUFACTURER
- WEATHERPROOF FUSED EQUIPMENT DISCONNECT SWITCH WITH FUSE SIZE AS RECOMMENDED BY EQUIPMENT MANUFACTURER
- MOTOR DISCONNECT SWITCH; HORSEPOWER RATED, NON FUSE
- COMBINATION MAGNETIC MOTOR STARTER; MOTOR CIRCUIT PROTECTOR AND FUSIBLE DISCONNECT
- MAGNETIC MOTOR STARTER
- VFD — VARIABLE FREQUENCY DRIVE, FURNISHED BY MECHANICAL, INSTALLED & CONNECTED COMPLETE BY ELECTRICAL
- MANUAL MOTOR STARTER WITH OVERLOAD PROTECTION
- MOTOR WITH FLEXIBLE CONDUIT CONNECTION AND DISCONNECT
- T — TRANSFORMER
- CONCRETE PULLBOX, SIZE AS REQUIRED OR SHOWN - CHRISTY OR EQUAL WITH LABELED LID PER USE
- COPPER GROUND ROD
- FLUSH CEILING MOUNTED JUNCTION BOX, U.O.N.
- FLUSH WALL MOUNTED JUNCTION BOX, UP 18" U.O.N.
- J — JUNCTION BOX FLUSH FLOOR MOUNTED
- 20A 3PG 125V DUPLEX RECEPTACLE, UP 18" U.O.N.
- 20A 3PG 125V DUPLEX RECEPTACLE, WEATHERPROOF, UP 18" U.O.N.
- 20A 3PG 125V DUPLEX RECEPTACLE, GROUND FAULT CIRCUIT INTERRUPTER TYPE, UP 18" U.O.N.
- IG — 20A 3PG 125V DUPLEX RECEPTACLE, ISOLATED GROUND TYPE, UP 18" U.O.N.
- T — 20A 3PG 125V DUPLEX RECEPTACLE, TAMPER RESISTANT, UP 18" U.O.N.
- 20A 3PG 125V DUPLEX RECEPTACLE, MOUNTED ABOVE COUNTER, U.O.N.
- 20A 3PG 125V DOUBLE DUPLEX RECEPTACLE, UP 18" U.O.N.
- 20A 3PG 125V DOUBLE DUPLEX RECEPTACLE, MOUNTED ABOVE COUNTER, U.O.N.
- 20A 3PG 125V SINGLE RECEPTACLE, UP 18" U.O.N.
- 20A 3PG 125V SINGLE TWISTLOCK RECEPTACLE, NEMA L5-20R, UP 18" U.O.N.
- SPECIAL RECEPTACLE AS INDICATED ON PLANS
- CONTROLLED AND IDENTIFIED (SPLIT-WIRED) DUPLEX RECEPTACLE, WITH ONE HALF OF RECEPTACLE WIRED THROUGH LOCAL PLUG-LOAD CONTROLLER, UP 18" U.O.N.
- FLOOR MOUNTED OUTLET BOX WITH SINGLE RECEPTACLE. SEE PLANS FOR RECEPTACLE TYPE.
- FLOOR MOUNTED OUTLET BOX WITH 20A 3PG 125V DUPLEX RECEPTACLE
- FLUSH CEILING MTD. DUPLEX OUTLET, 20A 3PG
- FLUSH CEILING MTD. SPECIAL RECEPTACLE AS INDICATED ON PLANS
- LINE VOLTAGE THERMOSTAT, PROVIDED & INSTALLED BY ELECTRICAL, CONNECTED COMPLETE BY MECHANICAL
- SURFACE MOUNTED WIREMOLD RACEWAY WITH RECEPTACLES AS INDICATED ON PLANS
- FB — FLUSH MOUNTED POWER AND SIGNAL FLOOR BOX WITH (1) 20A 3PG 125V DUPLEX RECEPTACLE AND (1) BOX FOR SIGNAL DEVICES - SEE SPECIFICATIONS
- (2) FB — FLUSH MOUNTED POWER AND SIGNAL FLOOR BOX WITH (2) 20A 3PG 125V DUPLEX RECEPTACLE AND (1) BOX FOR SIGNAL DEVICES - SEE SPECIFICATIONS
- SEPARATE WALL MOUNTED POWER AND SIGNAL OUTLET WITH (1) 20A 3PG 125V DUPLEX RECEPTACLE AND (1) SIGNAL OUTLET PLATE, UP 18" U.O.N.
- (2) — SEPARATE WALL MOUNTED POWER AND SIGNAL OUTLETS WITH (2) 20A 3PG 125V DUPLEX RECEPTACLE AND (1) SIGNAL OUTLET PLATE, UP 18" U.O.N.
- SEPARATE WALL MOUNTED POWER AND VIDEO CABLE OUTLET WITH (1) 20A 3PG 125V DUPLEX RECEPTACLE AND (1) VIDEO OUTLET PLATE, UP 18" U.O.N.
- TERMINAL MOUNTING BACKBOARD, 3/4" PLYWOOD, DIMENSIONS AS NOTED ON PLANS, PAINT TO MATCH ADJACENT WALL SURFACE, MAINTAINING UL FIRE LABEL VISIBLE
- TELEPHONE OUTLET, UP 18" U.O.N.
- w — TELEPHONE OUTLET, UP 48" U.O.N.
- TELEPHONE OUTLET, UP 18" U.O.N.
- COMBINED TELEPHONE/DATA OUTLET, UP 18" U.O.N.
- COMBINED VOICE/DATA OUTLET, MOUNTED ABOVE COUNTER U.O.N.
- W — WIRELESS ACCESS POINT - WALL OR CLG MTD
- FLUSH WALL MOUNTED INDOOR PUBLIC ADDRESS SPEAKER & SIGNAL SYSTEM CLOCK, UP 96" U.O.N.
- FLUSH WALL MOUNTED INDOOR PUBLIC ADDRESS SPEAKER, UP 96" U.O.N.
- F — FIRE ALARM SYSTEM INTELLIGENT MANUAL PULL STATION, UP 48" U.O.N.
- V — FIRE ALARM SYSTEM SPEAKER/STROBE, UP 80" U.O.N. NUMBER ADJACENT INDICATES CANDELA VALUE FOR STROBE
- V — WEATHERPROOF FIRE ALARM SYSTEM SPEAKER/STROBE, UP 80" U.O.N. NUMBER ADJACENT INDICATES CANDELA VALUE FOR STROBE
- S — FIRE ALARM SYSTEM STROBE, UP 80" U.O.N. NUMBER ADJACENT INDICATES CANDELA VALUE FOR STROBE
- S — WEATHERPROOF FIRE ALARM SYSTEM SPEAKER, UP 90" U.O.N.
- FS — FIRE ALARM SYSTEM SPRINKLER FLOW SWITCH. PROVIDE MONITOR MODULE
- FS — FIRE ALARM SYSTEM SPRINKLER VALVE SUPERVISORY SWITCH. PROVIDE MONITOR MODULE
- PIV — POST INDICATING VALVE
- FD — SPRINKLER FLOW ALARM (PROVIDE BY SPRINKLER CONTRACTOR). CONNECT COMPLETE VIA WATER FLOW SWITCH AUX. CONTACTS
- X — FIRE ALARM SYSTEM SMOKE DETECTOR
- k X — FIRE ALARM SYSTEM CEILING MOUNTED SMOKE DETECTOR PROGRAMMED FOR AUTOMATIC RECALL OF ELEVATOR
- M — FIRE ALARM SYSTEM HEAT DETECTOR
- D — FIRE ALARM SYSTEM HVAC DUCT MOUNTED SMOKE DETECTOR. COORDINATE WITH MECHANICAL FOR SUPPLY, INSTALL AND COMPLETE CONNECTION (INCLUDING CONTROL OF HVAC EQUIPMENT) - SEE SPECIFICATIONS
- M — FIRE ALARM MONITOR MODULE
- R — FIRE ALARM CONTROL MODULE

CALIFORNIA GREEN BUILDING STANDARDS COMPLIANCE

ALL EXTERIOR LUMINAIRES SPECIFIED IN THESE CONTRACT DOCUMENTS COMPLY WITH THE REQUIREMENTS OF THE CALIFORNIA ENERGY CODE AND THE CALIFORNIA GREEN BUILDING STANDARDS CODE, SECTION A5.106.8 LIGHT POLLUTION REDUCTION. EXTERIOR LUMINAIRES COMPLY WITH BACKLIGHT, UPLIGHT, AND GLARE (BUG) RATINGS AS DEFINED IN IESNA TM-15-11 AND BUG RATINGS DO NOT EXCEED THE MAXIMUM ALLOWABLE RATINGS FOR THIS PROJECT.

SYMBOLS LIST

ALL SWITCH AND CONTROL MOUNTING HEIGHTS OF 48" SHALL BE TO TOP OF THE DEVICE BOX. ALL RECEPTACLES WITH MOUNTING HEIGHT OF UP TO 18" SHALL BE NO LOWER THAN 15" TO BOTTOM OF THE DEVICE BOX, TYPICAL, U.O.N.

- RECESSED 2'x2', 2'x4' OR 1'x4' LENSED LUMINAIRE
- RECESSED 2'x2', 2'x4' LUMINAIRE WITH SHIELD
- RECESSED LUMINAIRE WITH LOUVERS; ARROW INDICATES WALLWASH OPTICS
- EM OR E — LM OR E — INDICATES EMERGENCY LUMINAIRE. SEE ABBREVIATIONS FOR TYPE OF EMERGENCY SOURCE
- PENDANT MOUNTED LUMINAIRE
  - INDICATES AIRCRAFT CABLE SUPPORT POINT (VERIFY WITH MANUFACTURER)
  - INDICATES PENDANT ELECTRICAL FEED POINT (VERIFY WITH MANUFACTURER)
- SURFACE CEILING, WALL OR COVE MOUNTED LUMINAIRE
- UNDER CABINET OR CASEWORK MOUNTED LUMINAIRE
- SURFACE OR PENDANT MOUNTED STRIP LUMINAIRE
- SURFACE CEILING MOUNTED LUMINAIRE
- PENDANT MOUNTED LUMINAIRE
- SURFACE MOUNTED LIGHTING TRACK WITH TRACK LUMINAIRES
- RECESSED ACCENT LUMINAIRE. ARROW INDICATES AIMING DIRECTION
- ADJUSTABLE DOWNLIGHT
- RECESSED WALLWASH LUMINAIRE
- MULTI-HEAD RECESSED ADJUSTABLE DOWNLIGHT
- WALL MOUNTED LUMINAIRE
- LINEAR WALL MOUNTED LUMINAIRE
- POST TOP AREA LUMINAIRE; ARROW INDICATES DIRECTION OF LIGHT DISTRIBUTION
- IN-GRADE UPLIGHT
- POLE MOUNTED AREA LIGHT
- WALL MOUNTED EXIT SIGN, ARROWS AS NOTED ON PLANS. SHADED AREA INDICATES NUMBER OF FACES
- CEILING MOUNTED EXIT SIGN, ARROWS AS NOTED ON PLANS. SHADED AREA INDICATES NUMBER OF FACES
- LOW LEVEL WALL MOUNTED EXIT SIGN
- WALL MOUNTED EMERGENCY BATTERY EGRESS LIGHTING LUMINAIRE WITH NUMBER OF ADJUSTABLE LOW VOLTAGE INCANDESCENT LAMP HEADS INDICATED
- WALL OR CEILING RECESSED EMERGENCY BATTERY EGRESS LIGHTING LUMINAIRE. ARROW INDICATES AIMING DIRECTION
- $ a — LINE VOLTAGE SINGLE POLE TOGGLE SWITCH, LETTER ADJACENT INDICATES RESPECTIVE ZONE CONTROLLED, UP 48" U.O.N.
- $ 2 — LINE VOLTAGE TWO POLE TOGGLE SWITCH, UP 48" U.O.N.
- $ 3 — LINE VOLTAGE THREE-WAY TOGGLE SWITCH, UP 48" U.O.N.
- $ k — LINE VOLTAGE KEY OPERATED TOGGLE SWITCH INSTALLED AT EQMP. SHOWN
- $ m — LINE VOLTAGE MOTOR RATED TOGGLE SWITCH
- $ p — LINE VOLTAGE TOGGLE SWITCH WITH PILOT LIGHT, LIGHT IS ON WHEN CIRCUIT IS CLOSED, UP 48" U.O.N.
- $ ab — LOW VOLTAGE MOMENTARY CONTACT SWITCH - SEE LOW VOLTAGE RELAY SCHEDULE, LOWER CASE LETTER ADJACENT INDICATES RESPECTIVE ZONE CONTROLLED, UP 48" U.O.N. SEE SPECS FOR TYPE OF SWITCH
- k $ ab — LOW VOLTAGE KEYED MOMENTARY CONTACT SWITCH - SEE LOW VOLTAGE RELAY SCHEDULE, LOWER CASE LETTER ADJACENT INDICATES RESPECTIVE ZONE CONTROLLED, UP 48" U.O.N. SEE SPECS FOR TYPE OF SWITCH
- a OS b — WALL MOUNTED SWITCH TYPE INFRARED OCCUPANCY SENSOR; UP 48" U.O.N.; SINGLE OR DUAL AS NOTED BY LETTERS ADJACENT. SET TO FIXED 30 MINUTE TIME DELAY AND MAX SENSITIVITY
- a OS b — WALL MOUNTED DUAL TECHNOLOGY OCCUPANCY SENSOR; UP 48" U.O.N.; SINGLE OR DUAL AS NOTED BY LETTERS ADJACENT. SET TO FIXED 30 MINUTE TIME DELAY AND MAX SENSITIVITY
- OSD — WALL MOUNTED DIGITAL DUAL TECHNOLOGY DIMMING OCCUPANCY SENSOR SWITCH; UP 48" U.O.N.
- $ a — WALL MOUNTED DIGITAL SWITCH, UP 48" U.O.N.; LOWER CASE LETTER ADJACENT INDICATES RESPECTIVE ZONE CONTROLLED; SEE DETAILS FOR TYPE
- 2 D a,b — WALL MOUNTED SINGLE OR MULTI-ZONE DIGITAL DIMMER SWITCH, UP 48" U.O.N.; LOWER CASE LETTERS ADJACENT INDICATE RESPECTIVE ZONES TO BE SIMULTANEOUSLY MANUALLY CONTROLLED; NUMERAL DESIGNATES NUMBER OF ZONES ASSIGNED TO THE DEVICE; SEE DETAILS FOR TYPE.
- WALL MOUNTED LINE VOLTAGE DIMMER SWITCH, UP 48" U.O.N.
- CEILING MOUNTED DUAL TECHNOLOGY DIGITAL OCCUPANCY SENSOR; SEE DETAILS FOR TYPE
- WALL MOUNTED DUAL TECHNOLOGY DIGITAL OCCUPANCY SENSOR; SEE DETAILS FOR TYPE
- CEILING MOUNTED LINE VOLTAGE DUAL TECHNOLOGY OCCUPANCY SENSOR:
- SINGLE ZONE SWITCHING OR DIMMING CLOSED LOOP DIGITAL DAYLIGHTING SENSOR; SEE DETAILS FOR TYPE. VERIFY EXACT LOCATION PRIOR TO ROUGH-IN
- P Z1,Z2 — SINGLE OR MULTI-ZONE SWITCHING OR DIMMING OPEN LOOP DIGITAL DAYLIGHTING SENSOR; NOTATIONS ADJACENT IDENTIFY DAYLIGHT ZONES ASSIGNED TO THE DEVICE; SEE DETAILS FOR TYPE. VERIFY EXACT LOCATION PRIOR TO ROUGH-IN
- ROOM CONTROLLER; SEE DETAILS FOR TYPE
- RC 2 — ADJACENT NUMERAL REFERS TO THE NUMBER OF ZONES TO BE CONTROLLED. VENDOR OR CONTRACTOR TO PROVIDE QUANTITY OF ROOM CONTROLLERS REQUIRED FOR THE NUMBER OF CONTROLLED ZONES.
- PC — PLUG LOAD ROOM CONTROLLER; SEE DETAILS FOR TYPE
- IR — ISOLATED RELAY FOR INTERFACE WITH HVAC SYSTEM; SEE DETAILS FOR TYPE
- NB — NETWORK BRIDGE; SEE DETAILS FOR TYPE AND CABLING
- EC — EMERGENCY LIGHTING CONTROL MODULE

GENERAL NOTES

1. PRIOR TO BID THE CONTRACTOR SHALL VISIT THE SITE TO ADEQUATELY DETERMINE ALL PRE-EXISTING CONDITIONS. BY THE ACT OF SUBMITTING A BID, THE CONTRACTOR WILL BE DEEMED TO HAVE COMPLIED WITH THE FOREGOING, TO HAVE ACCEPTED SUCH CONDITIONS, AND TO HAVE MADE ALLOWANCES THEREFORE IN PREPARING THE BID.
2. PROVIDE PARITY SIZED GREEN GROUND WIRE IN ALL POWER CONDUITS, BRANCH CIRCUITS (LIGHTING & POWER) AND HOMERUNS. PROVIDE ADDITIONAL ISOLAT

LUMINAIRE SCHEDULE

TYPE	MOUNTING	DESCRIPTION	MANUFACTURER CATALOG #	LIGHT SOURCE	POWER SUPPLY	VOLTS	INPUT WATTS
C13	SURFACE CEILING	8' ROUND WHITE ACRYLIC WRAPAROUND LENS. GLOSS WHITE HOUSING FINISH. TAMPER-RESISTANT SCREWS. WEIGHT 2 LBS./FT.	PRUDENTIAL R1-LED3-90-MO-8'-WA-YGW-UNV-SUR-X3-DM10-TRS	LED 3000K 90+ CRI 700 LUMENS/FT	0-10V DIMMING (10-100%)	UNV	7 W/FT
C14	SURFACE CEILING	3" x 48" FLAT DIFFUSED ACRYLIC LENSED LED HIGH OUTPUT STRIPLIGHT WEIGHT: 7 LBS	WILLIAMS 75L-4-L65-830-DMA-DIM-120	LED 3000K 90 CRI 6500 LUMENS	0-10V DIMMING (10-100%)	120	67 W
C15	SURFACE CEILING	2-1/4"" x 48" FROSTED DROP LENS HIGH OUTPUT LED STRIPLIGHT. WHITE FINISH. WEIGHT: 13 LBS.	LITHONIA ZL1D-L48-5000LM-FST-MVOLT-30K-90CRI-WH	LED 3000K 90+ CRI 5000 LUMENS	0-10V DIMMING	UNV	41 W
C15A	SURFACE CEILING	SIMILAR TO 'C15', EXCEPT NOMINAL 8' LENGTH; WEIGHT 26 LBS.	LITHONIA TZL1D-L96-10000LM-FST-MVOLT-30K-90CRI-WH	LED 3000K 90+ CRI 10,000 LUMENS	0-10V DIMMING	UNV	81 W
C16	SURFACE CEILING	17" DIAMETER FIXTURE. POLYCARBONATE LENS, ALUMINUM HOUSING, WET LOCATION, DEEP HOUSING FOR DIRECT CONDUIT ENTRY. WEIGHT: 14 LBS.	KENALL MR17FD-PP-FINISH-25L30K-277	LED 3000K 80 CRI 3000 LUMENS	NON-DIMMING (0-10v DIMMING)	277	30 W
C16A	SURFACE CEILING	SAME AS 'C16 BUT 120V. WEIGHT: 14 LBS.	KENALL MR17FD-PP-FINISH-25L30K-120	LED 3000K 80 CRI 3000 LUMENS	NON-DIMMING (0-10v DIMMING)	120	30 W
C17	RECESSED CEILING	4" APERTURE RECESSED WET LABEL LED WALL WASH FIXTURE.	LIGHTOLIER 4RN-UNIV C4L-20-8-30-W-Z10-U C4-R-WW-CC-P	LED 3000K 80 CRI 2000 LUMENS	0-10v DIMMING 1%	UNV	11 W
C18	RECESSED CEILING	SIMILAR TO C17 BUT NOMINAL 8'-0" LENGTH	FINELIGHT HP-2 WW-R-K-96"B-930	LED 3000K 90 CRI 586 LUMENS	0-10v DMX DIMMING 1%	UNV	21 W
C19	RECESSED CEILING	SIMILAR TO C17 EXCEPT DRY LOCATION	FINELIGHT HP-2 WW-R-K--48"B-930	LED 3000K 90 CRI 586 LUMENS	0-10v DMX DIMMING 1%	UNV	11 W
EX1	UNIVERSAL	EXIT SIGN; NUMBER OF FACES AND MOUNTING AS SHOWN ON PLANS. WEIGHT 8 LBS.	EVENLITE RZR3-AC-G-U-(FINISH)-CN	LED GREEN	NON-DIMMING	UNV	2 W
EX2	SURFACE	EXIT SIGN. SELF-LUMINOUS SINGLE FACE, SEALED TRITIUM. WHITE LETTERS. 20 YEAR SERVICE LIFE. SURFACE MOUNTED. ARCHITECT TO SELECT FACE AND FRAME COLORS.	ISOLITE 880-20-FACE COLOR-FRAME COLOR	SELF LUMINOUS PHOSPHOR	N/A	N/A	0
G1	GROUND	IN-GRADE UPLIGHT; 13" DIA.; BLUETOOTH AIMING/DIMMING; WALL WASH OPTIC	KIM LTV81FF/WW/3K	LED 3000K	0-10V AND BLUE TOOTH DIMMING	UNV	44 W
G2	GROUND	SIMILAR TO G1 EXCEPT 8" DIA., NARROW FLOOD OPTICS; SLIP RESISTANT LENS.	KIM LTV83FF/NF/3K/SR	LED 3000K	0-10V AND BLUE TOOTH DIMMING	UNV	14 W
H1	HIDDEN STRIP	LED TAPE LIGHT IN EXTRUDED ALUMINUM HOUSING WITH LENS. CONTRACTOR TO CONFIRM FINAL LUMINAIRE LENGTH WHEN TROPHY CABINET SHOP DRAWINGS ARE COMPLETE. REMOTE DRIVER IN VENTILATED ENCLOSURE.	KELVIX PQ3K-24V CH-006-CONFIRM LENGTH-FRR-CP-EC ULV96	LED 3000K 90+ CRI 530 LUMENS/FT	ELV COMPATIBLE	UNV	3.8 W/FT
P3	BATTEN-SUSPENDED /C-CLAMP	CYLINDRICAL LED PENDANT DOWNLIGHT, NOM. 8"DIA. x 10"H ALUMINUM HOUSING OVER STEEL FRAME, WITH FOUR REGRESSED PARABOLIC DIODE EMITTER REFLECTOR CELLS, SET IN REGRESSED STEEL BOTTOM PLATE,37 DEG. BEAM ANGLE, INTEGRAL ELECTRONIC DIMMING DRIVER, DMX OVER CAT5 INTEGRAL CONTROL, 6'-0" POWER AND DMX CONTROL CORD LEADS, CONTRACTOR TO FIELD INSTALL POWER PLUG AND DMX CONNECTOR. WEIGHT: 12.5 LBS.	ETC ARCP4R-3-37-B-H-C CLAMP-POWER CORD-DMX CORD	LED 3000K 90+ CRI 7249 LUMENS	DMX	UNV	100 W
P4	SUSPENDED	12" DIAMETER x 48" HIGH DECORATIVE CYLINDER. WIDE 84° BEAM DOWNLIGHT. SEPARATE CIRCUITS/CONTROL OF BODY AND DOWNLIGHT. HOUSING FINISH SELECTED BY ARCHITECT. WEIGHT: 45 LBS.	VISA CP2056-30K-30K-MVOLT-WIDE-(FINISH).	LED 3000K 85 CRI 10000 LUMENS BODY 2700 LUMENS DOWN	0-10V DIMMING	UNV	130W
P5	SUSPENDED	12' LONG LINEAR INDIRECT / DIRECT. WIDESPREAD OPTIC, HIGH OUTPUT, UPLIGHT. FLUSH, VERY HIGH OUTPUT, DOWNLIGHT. DUAL CIRCUIT. DIM TO OFF. FULLY ADJUSTABLE CABLE MOUNTING. FLAT ENDCAPS. 9/16" T-BAR CEILING TYPE. STANDARD WHITE FINISH. 2.9 LBS/FT	FINELITE HP-2 ID-12'-H-V-930-WSO-F-277-DC-FA-FE-C2 / DIM TO OFF OSRAM 100-1% DRIVER	LED 3000K 90+ CRI 1217 LUMENS/FT	0-10V DIMMING OSRAM (1-100%)	277	16.2 W/FT

LUMINAIRE SCHEDULE

TYPE	MOUNTING	DESCRIPTION	MANUFACTURER CATALOG #	LIGHT SOURCE	POWER SUPPLY	VOLTS	INPUT WATTS
B1	C-CLAMPED TO BATTEN	LED ELLIPSOIDAL LUMINAIRE, BLACK FINISH; CLAMP MOUNT, SAFETY CABLE, GLASS PATTERN HOLDER, 25°-50° ZOOM LENS ASSEMBLY; 5'-0" POWER CORD AND DMX CORD LEADS, CONTRACTOR TO FIELD INSTALL POWER PLUG AND DMX CONNECTOR. WEIGHT: 12.5 LBS.	ETC CCSPOT45S DPA-X S4LED-SFD 42550LT 400CC 400SC 400PH-G	LED 3500K 90+ CRI 7249 LUMENS	DMX	UNV	147W
C2	TYPE C2, C2A, C2	4" ROUND APERTURE LED DOWNLIGHT. WIDE DISTRIBUTION HYPERBOLIC, SELF FLANGED, REFLECTOR CLEAR DIFFUSE FINISH. DMX DRIVER. WEIGHT: 7 LBS	INDY LIGHTING L4-15LM-30K-MVOLT-G4-90CRI-DMXR-HW-CD	LED 3000K 90+ CRI 1195 LUMENS	DMX DIMMING TO 0.1%	UNV	13.66
C2A	RECESSED CEILING	SIMILAR TO 'C2', EXCEPT 0-10V NON-DMX CONTROLLED DIMMING. WEIGHT: 7 LBS.	INDY LIGHTING L4-15LM-30K-MVOLT-G4-90CRI-ZT-HW-CD	LED 3000K 90+ CRI 1195 LUMENS	0-10V DIMMING (10-100%)	UNV	13.66 W
C2B	EXTERIOR RECESSED CEILING	SIMILAR TO 'C2A', EXCEPT PARABOLIC TRIM REFLECTOR AND WET LOCATION. WEIGHT: 7 LBS.	INDY LIGHTING L4-15LM-30K-MVOLT-G4-90CRI-ZT-P-CD-WET	LED 3000K 90+ CRI 1195 LUMENS	0-10V DIMMING (10-100%)	UNV	13.66 W
C2C	RECESSED CEILING	SIMILAR TO 'C2A" EXCEPT WITH NARROW DISTRIBUTION HYPERBOLIC REFLECTOR. WEIGHT: 7 LBS.	INDY LIGHTING L4-15LM-30K-MVOLT-G4-90CRI-ZT-HN-CD	LED 3000K 90+ CRI 1195 LUMENS	0-10V DIMMING (10-100%)	UNV	13.66 W
C3	RECESSED CEILING	SIMILAR TO 'C2', EXCEPT WITH WALLWASH TRIM AND HIGHER OUTPUT. WEIGHT: 7 LBS.	INDY LIGHTING L4-28LM-30K-MVOLT-G4-90CRI-DMXR-HWS-CD	LED 3000K 90+ CRI 2210 LUMENS	DMX DIMMING TO 0.1%	UNV	28.5 W
C4	RECESSED CEILING	6" x 12" RECESSED LED ACCENT LIGHT. TWO INDIVIDUALLY 359° ROTATION 30° TILT, LOCKABLE HEADS. 60° BEAMSPREAD. ACCEPTS THREE ACCESSORIES. PROVIDE HEX CELL LOUVE,. SNOOT, MATTE BLACK FINISH INTERIOR AND TRIM. WEIGHT: 15 LBS	SPECTRUM RC612FT3-LEDXT13L-30HK-WD-ED01-2-3AC-HL34-SN34-MBI-FT0612-MB	LED 3000K 98 CRI 2062 LUMENS	0-10V DIMMING ELDOLED (0.1-100%)	277	30 W
C4A	RECESSED CEILING	SIMILAR TO 'C4', EXCEPT 6" x 9" SINGLE HEAD. 'PRIMARY BLUE' COLOR LENS. WEIGHT: 13 LBS.	SPECTRUM RC66FT3-LEDXT13L-30HK-WD-ED01-2-3AC-HL34-SN34-LN34-PRIMARY BLUE-MBI-FT066-MB	LED 3000K 98 CRI 1031 LUMENS	0-10V DIMMING ELDOLED (0.1-100%)	277	15 W
C4B	RECESSED CEILING	SIMILAR TO 'C4', EXCEPT SINGLE ADJUSTABLE HEAD WITH 26° BEAMSPREAD OPTIC AND LINEAR SPREAD LENS. WEIGHT:13 LBS.	SPECTRUM RC66FT3-LEDXT13L-30HK-ND-ED01-2-3AC-HL34-SN34-SK34-MBI-FT066-MB	LED 3000K 98 CRI 1031 LUMENS	0-10V DIMMING ELDOLED (0.1-100%)	277	15 W
C5		NOT USED					
C6	UNDERSIDE OF CATWALK	TWO-CELL YOKE MOUNTED LUMINAIRE. 37° BEAM OPTICS. BLACK FINISH. 6'-0"CONTRACTOR TO PROVIDE AND INSTALL POWER PLUG AND DMX CONNECTOR TO CORD BY MANUFACTURER; RAL FINISH AS SPECIFIED BY ARCHITECT WEIGHT: 7 LBS	ETC APCP2-3-37-RAL FINISH-Y-POWER CORD-DMX CORD	LED 3000K 90+ CRI 3809 LUMENS	DMX USING CAT5 DIMMING TO 0.1%	UNV	55 W
C6A	UNDERSIDE OF CATWALK	SIMILAR TO C6 EXCEPT STANDARD BLACK FINISH. WEIGHT: 7 LBS	ETC APCP2-3-37-B-Y-POWER CORD-DMX CORD	LED 3000K 90+ CRI 3809 LUMENS	DMX USING CAT5 DIMMING TO 0.1%	UNV	55 W
C7	SURFACE CEILING	4' LED FROSTED LENS STRIP. WHITE FINISH. WEIGHT: 13 LBS.	LITHONIA ZL1D-L48-SMR-3500LM-FST-MVOLT-30K-90CRI-WH	LED 3000K 90+ CRI 3163 LUMENS	0-10V DIMMING	UNV	30 W
C7A	SURFACE CEILING	SIMILAR TO 'C7', EXCEPT NOMINAL 8' LENGTH; WEIGHT 26 LBS.	LITHONIA TZL1D-L96-1400LM-FST-MVOLT-30K-90CRI-WH	LED 3000K 90+ CRI 6326 LUMENS	0-10V DIMMING	UNV	60 W
C8	RECESSED CEILING	LENSED LED 2X2 TROFFER. FLAT DOOR. DIFFUSE CENTER OPTIC. WEIGHT: 16 LBS.	FINELITE HPR-LED-F-2X2-DCO-S-930-277V-SC-C2	LED 3000K 90+ CRI 2534 LUMENS	0-10V DIMMING (10-100%)	277	28.5 W
C9	RECESSED CEILING	LENSED LED 2X4 TROFFER. FLAT DOOR. DIFFUSE CENTER OPTIC. WEIGHT: 33 LBS.	FINELITE HPR-LED-F-2X4-DCO-V-930-120V-SC-C2	LED 3000K 90+ CRI 6979 LUMENS	0-10V DIMMING (10-100%)	120	55.1 W
C9A	RECESSED CEILING	SIMILAR TO 'C9', EXCEPT LOWER LUMENS. AND 277V WEIGHT: 33 LBS.	FINELITE HPR-LED-F-2X4-DCO-B-930-277V-SC-C2	LED 3000K 90+ CRI 3537 LUMENS	0-10V DIMMING (10-100%)	277	35.2 W
C9B	SURFACE CEILING	SIMILAR TO 'C9A', EXCEPT SURFACE MOUNT. WEIGHT: 33 LBS.	FINELITE HPR-LED-F-2X4-DCO-B-930-277V-SC-SM	LED 3000K 90+ CRI 3537 LUMENS	0-10V DIMMING (10-100%)	277	35.2 W
C9C	RECESSED CEILING	SAME AS 'C9' BUT 277V. WEIGHT: 33 LBS.	FINELITE HPR-LED-F-2X4-DCO-V-930-277V-SC-C2	LED 3000K 90+ CRI 6979 LUMENS	0-10V DIMMING (10-100%)	277	55.1 W
C11	EXTERIOR RECESSED CEILING	6" DIAMETER DOWNLIGHT; 4" DEEP FROSTED GLASS TRIM. WET LOCATION LISTED. WEIGHT: 6.5 LBS	SPECTRUM SGE6LEDOS-20L-30K-DS10-277-AR6223OSMWSO-FA-CY4-WL	LED 3000K 84+CRI 2000 LUMENS	0-10V DIMMING (10-100%)	277	25 W
C12	SUSPENDED CEILING	4.6" H x 3.8" W x 48" SUSPENDED FIXTURE. EXTRUDED ACRYLIC DIFFUSE WHITE LENS. FINISH AS SELECTED BY ARCHITECT. WEIGHT: 25 LBS	SPECTRUM EV04IND48OL-10L-30K-DO10X-DW-CD-FINISH	LED 3000K 84+CRI 4000 LUMENS	0-10V DIMMING (1-100%)	UNV	33 W
C12A	SURFACE CEILING	SIMILAR TO 'C12', BUT SURFACE MOUNT. FINISH AS SELECTED BY ARCHITECT. WEIGHT: 25 LBS	SPECTRUM EV04IND48OL-10L-30K-DO10X-DW-SD	LED 3000K 84+CRI 4000 LUMENS	0-10V DIMMING (1-100%)	UNV	33 W
C12B	SUSPENDED CEILING	SIMILAR TO 'C12', EXCEPT DMX DIMMING. MATTE BLACK FINISH. WEIGHT: 25 LBS	SPECTRUM EV04IND48OL-10L-30K-DMX-DW-CD-MB	LED 3000K 84+CRI 4000 LUMENS	DMX DIMMING	UNV	33 W

QUATTROCCHI KWOK ARCHITECTS
Main Office:
636 Fifth Street, Santa Rosa, CA 95404
Pleasanton Office:
600 Main Street, Suite E,
Pleasanton, CA 94566
(707) 576-0829

O'MAHONY & MYER
ELECTRICAL ENGINEERING and LIGHTING DESIGN
4340 REDWOOD HWY., SUITE 245
SAN RAFAEL, CALIFORNIA 94903
(415) 492-0420/FAX (415) 479-9602
www.ommconsulting.com

PAUL J. COLEMAN No. 14738 Exp. 6/21 REGISTERED PROFESSIONAL ENGINEER ELECTRICAL STATE OF CALIFORNIA

FREEDOM HIGH SCHOOL

PERFORMING ARTS AND CTE FACILITIES

1050 NEROLY RD
OAKLEY, CA 94561

LIBERTY UNION HIGH SCHOOL DISTRICT

	DSA	2019

ARCH PROJECT NO: 1739.00
DRAWN BY: TV/LN/ME
DRAWING SCALE:
PTN: 61721-0068

BID SET

JUNE 28, 2019

SHEET TITLE

LUMINAIRE SCHEDULE

SHEET NUMBER

E-0.2

LUMINAIRE SCHEDULE

TYPE	MOUNTING	DESCRIPTION	MANUFACTURER CATALOG #	LIGHT SOURCE	POWER SUPPLY	VOLTS	INPUT WATTS
P6	PENDANT	5-3/4" DIAMETER x 12" HIGH CYLINDER DOWNLIGHT. HEAVY GAUGE ALUMINUM HOUSING WITH MATTE BLACK FINISH. SELF-FLANGED black HYPERBOLIC NARROW TRIM REFLECTOR. 18" BLACK PENDANT.DMX DRIVER. 6 LBS.	INDY LC4-P-28LM-30K-MVOLT-B-G4-90CRI-DMXR-HN-BD-PSTEM-18IN-BLPEN-PDMXR	LED 3000K 90+ CRI 2600 LUMENS	DMX DIMMING	UNV	26.46 W
S3	SITE	LED AREA LUMINAIRE WITH TYPE III LIGHT DISTRIBUTION. 32"X15" DIAMETER HEAD ARM MOUNTED TO POLE; DIFFUSE LENS COMFORT OPTICS. 20' HIGH x 4" DIAMETER, 11 GAUGE STRAIGHT ROUND STEEL POLE WITH BASE COVER AND 3" x 5" SEMI-FLUSH HANDHOLE. DUAL CIRCUIT FOR HI/LOW OUPUT; FINISH INTENDED TO MATCH ADJACENT POLES INSTALLED AS PART OF M&O PROJECT - CONFIRM FINISH WITH ARCHITECT. LUMINAIRE WEIGHT: 27 LBS.	GARDCO P26-48L-500-WW-G2-AR-3-UNV-DCC-DD-FINISH POLE: PHILLIPS SRS-20-4.0-D1-FINISH	LED 3000K 70+ CRI 9000 LUMENS	DUAL CIRCUIT	UNV	74 W
S5	SITE	SIMILAR TO 'S3', BUT POST TOP MOUNTED ON TWO-ARM YOKE; 20" DIAMETER ROUND HEAD; WITH TYPE V DISTRIBUTION. 12' HIGH x 4" DIAMETER, 11 GAUGE STRAIGHT ROUND STEEL POLE WITH BASE COVER AND 3" x 5" SEMI-FLUSH HANDHOLE. 3" x 4" TENON MOUNTING. CONFIRM FINISH WITH ARCHITECT. LUMINAIRE WEIGHT: 20 LBS.	GARDCO PPT-140L-1675-WW-G2-T3-5-UNV-FINISH POLE: PHILLIPS SRS-12-4.0-TENON-FINISH	LED 3000K 70+ CRI 7500 LUMENS	NON-DIMMING	UNV	75 W
W1	RECESSED WALL	LED SQUARE STEPLITE. CONCEALED OPTIC. RIBBED MATTE BLACK APERTURE. LONG DISTRIBUTION. FACEPLATE FINISH SELECTED BY ARCHITECT. WEIGHT: 1LB	WINONA STEP12-SQU-L-LST1A-350mA-WHT30K-MVOLT-DMD-FINISH	LED 3000K 90+ CRI 76 LUMENS	0-10V DIMMING	UNV	4 W
W1A	RECESSED WALL	SIMILAR AS 'W1', EXCEPT BLUE LEDS. WEIGHT 1LB	WINONA STEP12-SQU-L-LST1A-350mA-BLU-MVOLT-DMD-FINISH	BLUE LED 76 LUMENS	0-10V DIMMING	UNV	4 W
W2	SURFACE WALL	WALL MOUNT LED INDIRECT/DIRECT. 4.75" H x 4' LONG x 2.25" EXTENSION. EXTRUDED ALUMINUM HOUSING. STANDARD OUTPUT ASYMMETRIC RIGHT UPLIGHT. HIGH OUTPUT DOWNLIGHT FLAT BOTTOM LENS. MOD DRIVER WITH 0-100% DIM RANGE. WEIGHT: 2.9 LBS./FT.	FINELITE HP-2 WM ID-4'-S-H-830-ASY-R-F-120-MB-SC-MOD 0% DIMMING DRIVER	LED 3000K 80+ CRI 1059 LUMENS/FT	0-10V DIMMING (0-100%)	120	10.6 W/FT
W2A	SURFACE WALL	SAME AS W2 EXCEPT 277V.	FINELITE HP-2 WM ID-4'-S-H-830-ASY-R-F-277-MB-SC-MOD 0% DIMMING DRIVER	LED 3000K 80+ CRI 1059 LUMENS/FT	0-10V DIMMING (0-100%)	277	10.6 W/FT
W3A	EXTERIOR SURFACE WALL	DOWNLIGHT ONLY SCONCE. TYPE III DIFFUSED. TRIANGLE/WEDGE FACIA FORM, FULL PANEL. HOUSING AND FASCIA FINISHES SELECTED BY ARCHITECT. WEIGHT: 12 LBS	AAL CY1-25-3K8-1-3D-UNV-HOUSING FINISH-T-FPP	LED 3000K 80+ CRI NOMINAL 2500 LUMENS	0-10V DIMMING	UNV	26 W
W4	SURFACE WALL	SIMILAR TO 'W2', LENGTHS PER LIGHTING PLANS. EXCEPT HIGH OUTPUT ASYMMETRIC RIGHT UPLIGHT. VERY HIGH OUTPUT DOWNLIGHT FLAT BOTTOM LENS. DUAL CIRCUIT. EM SECTIONS IN DIRECT (DOWNLIGHT) ONLY IN LOCATIONS SHOWN ON PLANS. WEIGHT: 2.9 LBS./FT.	FINELITE HP-2 WM ID-LENGTH-H-V-830-ASY-R-F-277V-MB-DC-MULTIPLE EM DIRECT (SEE PLANS).	LED 3000K 80+ CRI 1632 LUMENS/FT	0-10V DIMMING (10-100%)	277	16.2 W/FT
W5	SURFACE WALL	LED WRAPAROUND. 2' TALL MOUNTED VERTICALLY BETWEEN MIRRORS. ROUND WHITE HIGH-STRENGTH ACRYLIC SNAP-IN LENS. WHITE HOUSING FINISH. WEIGHT: 2 LBS./FT.	PRIMUS ALX1-RLR-LED-M-3K-UNV1%-SM-AEB-W-LENGTH	LED 3000K 90+ CRI 878 LUMENS/FT	0-10V DIMMING (1-100%)	UNV	15.8 W
W5A	SURFACE WALL	SAME AS 'W5', BUT LENGTHS AS SHOWN ON PLANS (SEE DRESSING ROOM INTERIOR ELEVATIONS). WEIGHT: 2 LBS./FT.	PRIMUS ALX1-RLR-LED-M-3K-UNV1%-SM-AEB-W-LENGTH	LED 3000K 90+ CRI 878 LUMENS/FT	0-10V DIMMING (1-100%)	UNV	7.9 W/FT
W8	SURFACE WALL	WALL MOUNT INDIRECT/DIRECT. LENGHTS PER LIGHTING PLANS. UPLIGHT ASYMMETRIC RIGHT OPTIC. FLAT BOTTOM LENS. WEIGHT: 2.9 LBS./FT.	FINELITE HP-2 WM ID-LENGTH-S-S-930-ASY-R-F-277V-MB-SC	LED 3000K 90+ CRI 572 LUMENS/FT	0-10V DIMMING (10-100%)	277	7.2 W
W9	SURFACE WALL	WALL MOUNT "JELLY JAR". SPUN AND DIE-CAST HEAVY GAUGE ALUMINUM HOUSING. 11.1" HIGH x 5.5" W x 4.2" PROJECTION PLUS LARGE DRIVER CANOPY DEPTH. PRISMATIC GLASS. CAST WIRE GUARD. MATTE BLACK FINISH. WEIGHT: 5.1 LBS	SPECTRUM WJ1GV-15L-30K-DO10X-PJ3-CG1-CP13-MB	LED 3000K 85+ CRI 1500 LUMENS	0-10V DIMMING (1-100%)	277	11.3 W
W10	SURFACE WALL	SURFACE MOUNTED LED VAPORTIGHT LUMINAIRE WITH NOM. 7" W X 6" D X 28" L REINFORCED FIBERGLASS HOUSING; FULLY GASKETED, IMPACT-RESISTANT, RIBBED OPAL WHITE ACRYLIC 'WRAP-AROUND' DIFFUSER; MEDIUM OUTPUT; STAINLESS STEEL LATCHES; IP 67 RATING.	COLUMBIA #LXEM-2-35-ML-RFA-E-U-SSL	LED 3000K	NO DIMMING	UNIV	39

QUATTROCCHI KWOK ARCHITECTS
Main Office:
636 Fifth Street, Santa Rosa, CA 95404
Pleasanton Office:
600 Main Street, Suite E,
Pleasanton, CA 94566
(707) 576-0829

O'MAHONY & MYER
ELECTRICAL ENGINEERING and LIGHTING DESIGN
4340 REDWOOD HWY., SUITE 245
SAN RAFAEL, CALIFORNIA 94903
(415) 492-0420/FAX (415) 479-9602
www.ommconsulting.com

PAUL J. COLEMAN No. 14738 Exp. 6/21 REGISTERED PROFESSIONAL ENGINEER ELECTRICAL STATE OF CALIFORNIA

FREEDOM HIGH SCHOOL

PERFORMING ARTS AND CTE FACILITIES

1050 NEROLY RD
OAKLEY, CA 94561

LIBERTY UNION HIGH SCHOOL DISTRICT

1	DSA	2019

ARCH PROJECT NO: 1739.00
DRAWN BY: TV/LN/ME
DRAWING SCALE:
PTN: 61721-0068

BID SET

JUNE 28, 2019

SHEET TITLE

LUMINAIRE SCHEDULE

SHEET NUMBER

E-0.3

FREEDOM HS PERFORMING ARTS CENTER AND CTE - 218054

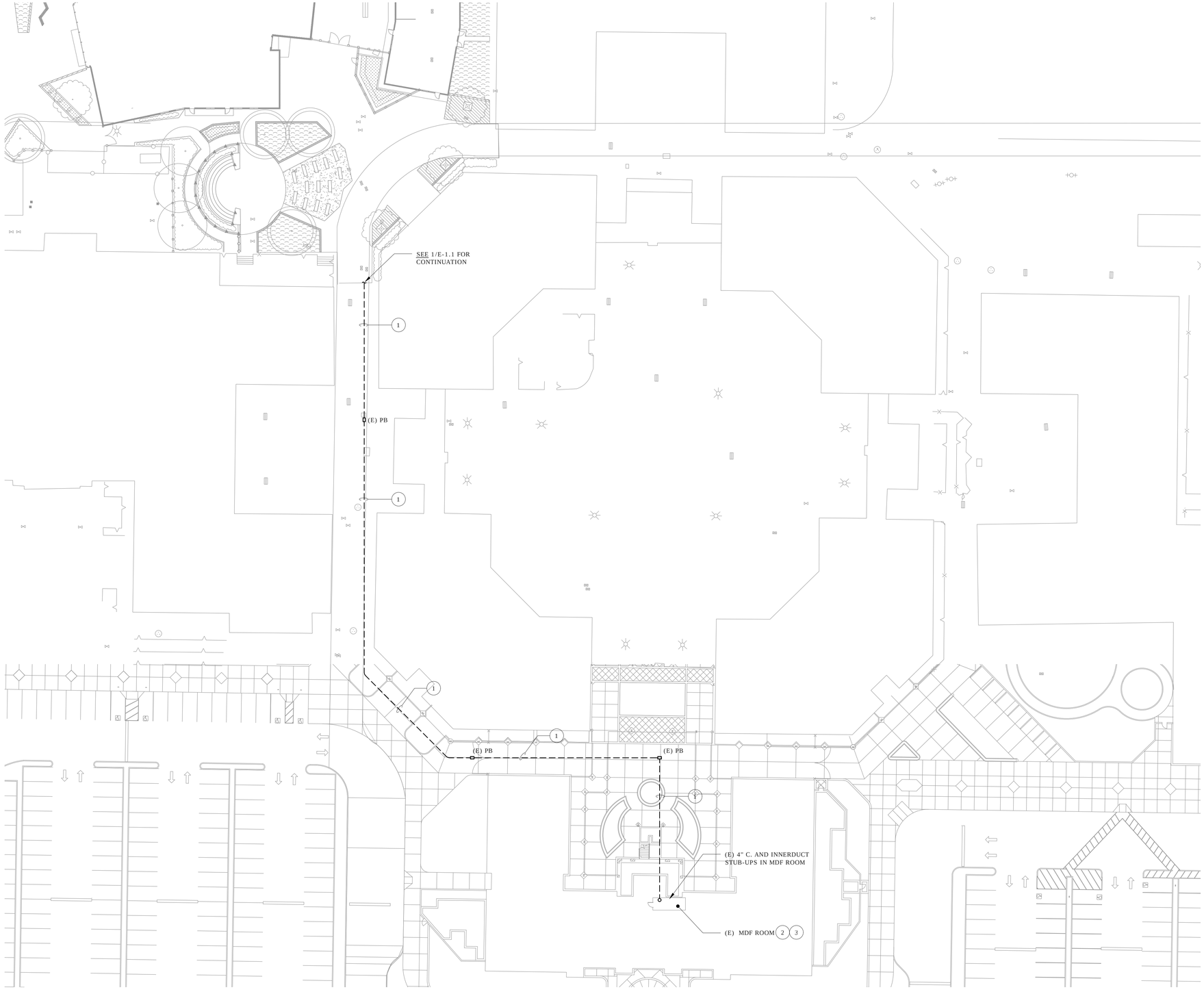

OVERALL SITE PLAN - POWER & SIGNAL

SCALE 1" = 30'

NUMBERED SHEET NOTES

1. PROVIDE AND INSTALL THE FOLLOWING UNDERGROUND SIGNAL SYSTEMS CABLING ROUTED VIA EXISTING SPARE CONDUIT INFRASTRUCTURE TO ADMIN BUILDING MDF ROOM.

   (E) 4" CONDUIT WITH (E) INNERDUCT FOR FIBER OPTIC (VOICE AND DATA) - SEE 2/E-5.2 FOR CABLING REQUIREMENTS.

   (E) 4" CONDUIT WITH (E) INNERDUCT FOR FIRE ALARM - SEE 1/E-5.3 & SEE FE SERIES.

   (E) 4" CONDUIT WITH (E) INNERDUCT FOR CLOCK/SPEAKER - SEE 1/E-5.2 FOR CABLING REQUIREMENTS.

2. ALL FIBER OPTIC VOICE, DATA, AND CLOCK/SPEAKER SYSTEMS SHALL BE TERMINATED COMPLETE AS SHOWN ON THE DRAWINGS. THE EXISTING MDF RACK IS LOCATED ON THE SOUTH WALL OF THE MDF ROOM.

3. ALL FIBER OPTIC FIRE ALARM SYSTEMS SHALL BE TERMINATED COMPLETE AS SHOWN ON THE DRAWINGS. THE EXISTING FIRE ALARM PANEL IS LOCATED ON THE EAST WALL OF THE MDF ROOM.

QUATTROCCHI KWOK ARCHITECTS
Main Office:
636 Fifth Street, Santa Rosa, CA 95404
Pleasanton Office:
600 Main Street, Suite E,
Pleasanton, CA 94566
(707) 576-0829

O'MAHONY & MYER
ELECTRICAL ENGINEERING and LIGHTING DESIGN
4340 REDWOOD HWY., SUITE 245
SAN RAFAEL, CALIFORNIA 94903
(415) 492-0420/FAX (415) 479-9602
www.ommconsulting.com

PAUL J. COLEMAN — No. 14738 — Exp. 6/21 — REGISTERED PROFESSIONAL ENGINEER — ELECTRICAL — STATE OF CALIFORNIA

FREEDOM HIGH SCHOOL

PERFORMING ARTS AND CTE FACILITIES

1050 NEROLY RD
OAKLEY, CA 94561

LIBERTY UNION HIGH SCHOOL DISTRICT

△	DSA	2019

ARCH PROJECT NO: 1739.00
DRAWN BY: TV/LN/ME
DRAWING SCALE:
PTN: 61721-0068

BID SET

JUNE 28, 2019

SHEET TITLE

OVERALL SITE PLAN POWER & SIGNAL

SHEET NUMBER

E-1.0

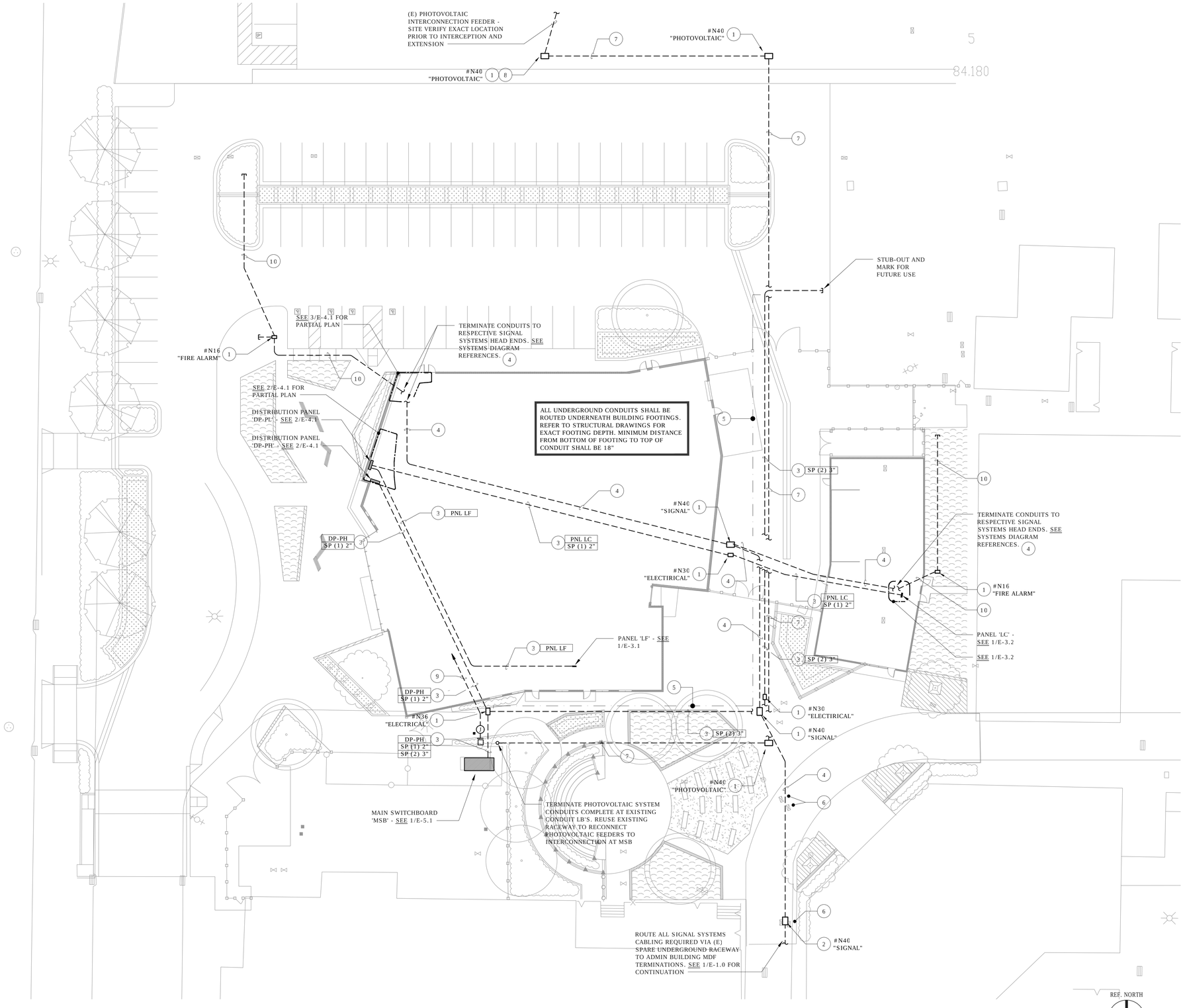

SITE PLAN - POWER & SIGNAL

SCALE 1" = 20'

1 / E-1.1

NUMBERED SHEET NOTES

1. PROVIDE FLUSH, IN GRADE PULLBOX CHRISTY (OR EQUAL), SIZED AS NOTED ON PLANS. PULLBOX COVER SHALL BE LABELED AS IDENTIFIED ON PLANS. WHERE LOCATED IN TRAFFIC AREAS, BOXES SHALL BE 'TRAFFIC RATED' REINFORCED CONCRETE WITH STEEL FRAME AND STEEL COVER. WHERE LOCATED ELSEWHERE, BOXES SHALL BE REINFORCED CONCRETE AND COMPOSITE COVER. ALL PULLBOX LOCATION SHALL BE COORDINATED WITH THE ARCHITECT.
2. INTERCEPT EXISTING SIGNAL CONDUIT AT EXISTING PULLBOX LOCATION. THE PULLBOX SHALL BE REPLACED WITH A NEW #N40 (PER SIMILAR REQUIREMENTS OF NUMBERED NOTE 1). THE NEW SIGNAL SYSTEM SHALL BE EXTENDED TO EXISTING CAMPUS SYSTEMS VIA THIS LOCATION - SEE E-1.0.
3. PROVIDE AND INSTALL UNDERGROUND FEEDERS TO DISTRIBUTION AND BRANCH PANELS AS NOTED WITH ADJACENT TAG DESCRIPTION. SEE 1/E-5.1 FOR FEEDER SIZING. CONDUIT TAG NOTED WITH "SP" SHALL BE SPARE C.O. FOR FUTURE USE.
4. PROVIDE AND INSTALL UNDERGROUND SIGNAL SYSTEMS AS FOLLOWS:
   - (1) 4" C. - FIBER OPTIC (VOICE AND DATA) - SEE 2/E-5.2
   - (1) 3" C. - FIRE ALARM - SEE 1/E-5.3 & SEE FE SERIES
   - (1) 4" C. - CLOCK / PA - SEE 1/E-5.2
   - (1) 2" C. - EMS - SEE 1/E-5.2
   - (1) 2" C. - SECURITY - STUB CONDUITS AT BACKBOARD
   - (2) 2" C. - SPARES - STUB CONDUITS AT BACKBOARD
5. ALL CONDUITS ALONG THIS LINE SHALL BE ROUTED IN COMMON SITE "UTILITY CORRIDOR". MAINTAIN A 3' LATERAL SEPARATION FROM ALL OTHER SITE UTILITIES. DO NOT RUN OVER, OR UNDER ANY OTHER SITE UTILITIES. COORDINATE ALL TRENCHING ROUTES AND SEPARATIONS WITH CIVIL, LANDSCAPE AND ARCHITECT PRIOR TO COMMENCING WORK.
6. EXISTING PULLBOX(ES) SHALL BE REPLACED WITH NEW TO ACCOMMODATE NEW HARDSCAPE LEVEL. MATCH EXISTING PULLBOX SIZE AND PROVIDE EXTENSION COLLARS AS REQUIRED TO MATCH NEW HARDSCAPE LEVEL.
7. PROVIDE AND INSTALL NEW UNDERGROUND 1600A PHOTOVOLTAIC FEEDER TO REPLACE EXISTING, WHICH IS DISTURBED BY NEW BUILDING FOOTPRINT.
8. INTERCEPT EXISTING PHOTOVOLTAIC FEEDER AT THIS APPROXIMATE LOCATION WITH NEW PULLBOX. SPLICE EXISTING FEEDER AND EXTEND WITH NEW COPPER CABLING TO INTERCONNECTION LOCATION.
9. IRRIGATION CONTROLLER POWER. PROVIDE AND INSTALL (2) #8 + (1) #10G. IN 1"C. TO CONTROLLER LOCATION. COORDINATE EXACT ROUGH-IN REQUIREMENTS PRIOR TO ROUGH-IN.
10. PROVIDE AND INSTALL 1" C. FOR FIRE ALARM CONNECTIONS TO DDCV AND PIV EQUIPMENT. STUB-OUT ADJACENT EQUIPMENT, COORDINATE EXACT LOCATION PRIOR TO ROUGH-IN. REFER TO FE SERIES FOR FIRE ALARM WIRING.

PRIOR TO COMMENCING WORK, CONTRACTOR SHALL HIRE THE SERVICES OF AN INDEPENDENT SURVEY COMPANY, WHICH SHALL MARK THE LOCATIONS OF ALL EXISTING UNDERGROUND UTILITIES WITHIN THE AREA OF WORK. THIS CONTRACTOR SHALL BE RESPONSIBLE TO PROTECT IN PLACE ALL EXISTING UNDERGROUND UTILITIES AND ROUTE NEW TRENCHES AND CONDUIT SUCH TO AVOID CONFLICT WITH EXISTING. CONTRACTOR SHALL BE RESPONSIBLE FOR ANY DAMAGES OCCURRING TO EXISTING UNDERGROUND INFRASTRUCTURE. IN THE EVENT DAMAGES OCCUR, CONTRACTOR SHALL INCUR ALL COSTS AND REPAIR ALL CONDITIONS TO THE SATISFACTION OF THE DISTRICT.

QUATTROCCHI KWOK ARCHITECTS
Main Office:
636 Fifth Street, Santa Rosa, CA 95404
Pleasanton Office:
600 Main Street, Suite E,
Pleasanton, CA 94566
(707) 576-0829

O'MAHONY & MYER
ELECTRICAL ENGINEERING and LIGHTING DESIGN
4340 REDWOOD HWY, SUITE 245
SAN RAFAEL, CALIFORNIA 94903
(415) 492-0420/FAX (415) 479-9602
www.ommconsulting.com

PAUL J. COLEMAN No.14738 Exp. 6/21 REGISTERED PROFESSIONAL ENGINEER ELECTRICAL STATE OF CALIFORNIA

FREEDOM HIGH SCHOOL

PERFORMING ARTS AND CTE FACILITIES

1050 NEROLY RD
OAKLEY, CA 94561

LIBERTY UNION HIGH SCHOOL DISTRICT

	DSA	2019

ARCH PROJECT NO: 1739.00
DRAWN BY: TV/LN/ME
DRAWING SCALE:
PTN: 61721-0068

BID SET

JUNE 28, 2019

SHEET TITLE

SITE PLAN POWER & SIGNAL

SHEET NUMBER

E-1.1

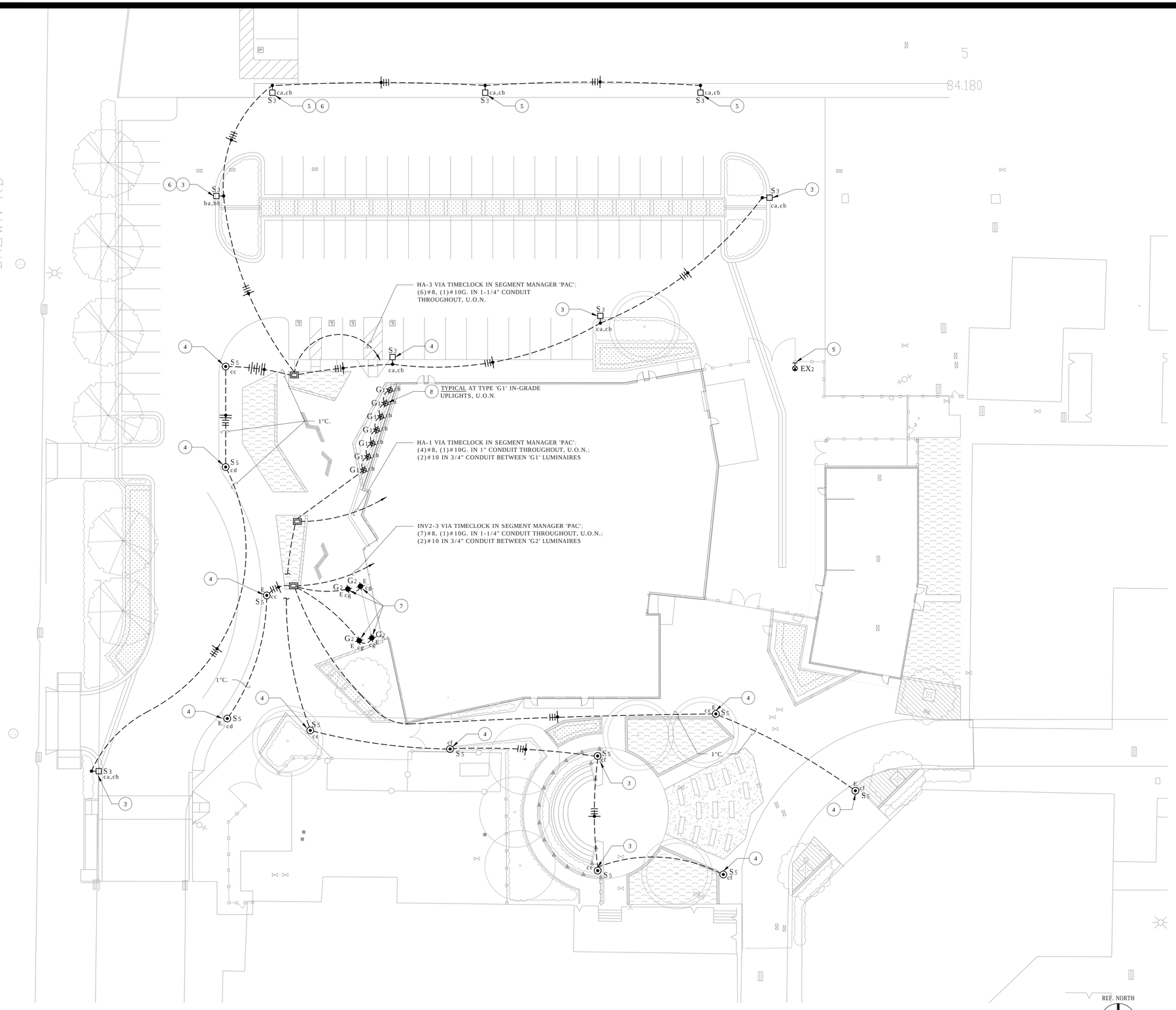

SITE PLAN - LIGHTING

SCALE 1" = 20'

NUMBERED SHEET NOTES

1. NOT USED.
2. NOT USED.
3. SEE DETAIL 3/E-7.5 FOR POLE MOUNTING.
4. SEE DETAIL 4/E-7.5 FOR POLE MOUNTING.
5. SQUARE CONCRETE POLE BASED INTEGRATED INTO SIDEWALK. SEE DETAIL 6/E-7.5 FOR POLE MOUNTING.
6. EXISTING POLE BASE AT INDICATED LOCATION MAY BE RE-USED PROVIDED IT MATCHES 6/E-7.5. EXISTING POLE AT INDICATED LOCATION MAY BE RE-USED PROVIDED IT MATCHES THE POLE FOR LUMINAIRE TYPE 'S3'. RE-ORIENT POLE AS REQUIRED.
7. IN-GRADE MOUNTED UPLIGHT, FLUSH MOUNTED AT WALKWAY. ALIGN WITH RAIN CANOPY COLUMN. LUMINAIRE IS AIMABLE AND DIMMABLE VIA BLUE-TOOTH SMART-PHONE APP. AIM TO GRAZE LIGHT UP RAIN CANOPY COLUMNS AND UPLIGHT UNDERSIDE OF RAIN CANOPY. AIMING AND DIMMING SHALL OCCUR AFTER DUSK WITH THE ARCHITECT PRESENT.
8. IN-GRADE MOUNTED UPLIGHT AT PLANTING AREA. LUMINAIRE IS AIMABLE AND DIMMABLE VIA BLUE-TOOTH APP. AIM TO EVENLY ILLUMINATE BUILDING FACADE. AIMING SHALL OCCUR AFTER DUSK WITH THE ARCHITECT PRESENT.
9. SELF LUMINOUS EXIT SIGN.

QUATTROCCHI KWOK ARCHITECTS
Main Office:
636 Fifth Street, Santa Rosa, CA 95404
Pleasanton Office:
600 Main Street, Suite E,
Pleasanton, CA 94566
(707) 576-0829

O'MAHONY & MYER
ELECTRICAL ENGINEERING and LIGHTING DESIGN
4340 REDWOOD HWY., SUITE 245
SAN RAFAEL, CALIFORNIA 94903
(415) 492-0420/FAX (415) 479-9602
www.ommconsulting.com

PAUL J. COLEMAN No. 14738 Exp. 6/21 REGISTERED PROFESSIONAL ENGINEER ELECTRICAL STATE OF CALIFORNIA

FREEDOM HIGH SCHOOL

PERFORMING ARTS AND CTE FACILITIES

1050 NEROLY RD
OAKLEY, CA 94561

LIBERTY UNION HIGH SCHOOL DISTRICT

1	DSA	2019

ARCH PROJECT NO: 1739.00
DRAWN BY: TV/LN/ME
DRAWING SCALE:
PTN: 61721-0068

BID SET

JUNE 28, 2019

SHEET TITLE

SITE PLAN LIGHTING

SHEET NUMBER

E-1.2

FREEDOM HS PERFORMING ARTS CENTER AND CTE – 218054

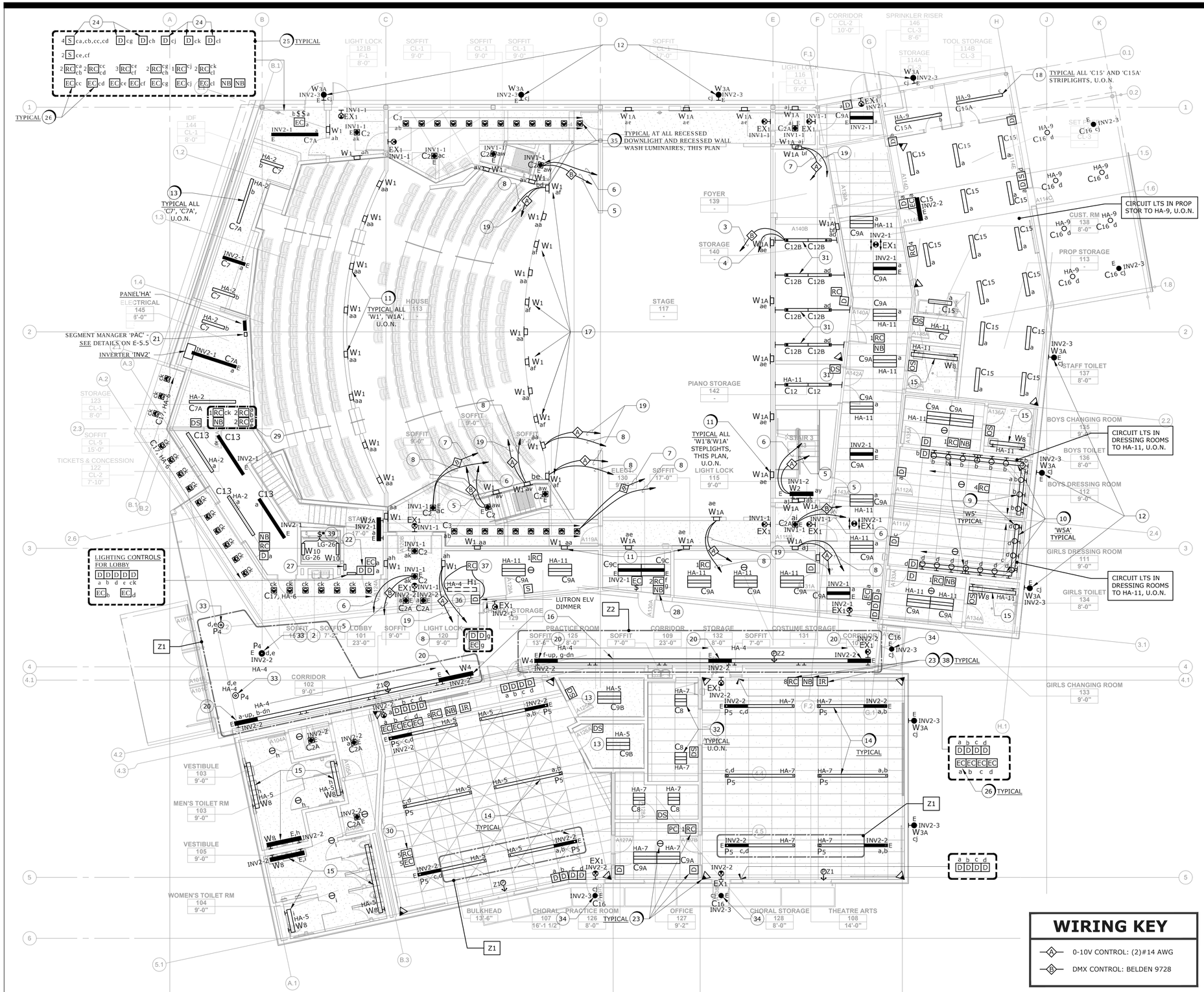

WIRING KEY

- (A) 0-10V CONTROL: (2)#14 AWG
- (B) DMX CONTROL: BELDEN 9728

REF. NORTH

BUILDING **A - 1ST FLOOR PLAN - LIGHTING - PAC**

SCALE 1/8" = 1' - 0"

NUMBERED SHEET NOTES

1. SEE ARCHITECTURAL RELAY PANEL ARP-3 SCHEDULE ON SHEET E-5.4 FOR CONTROL ZONE RELAY ASSIGNMENT.
2. PROVIDE 0-10V TYPE (A) WIRING TO ALL FIXTURES OUTSIDE OF THE THEATRICAL SPACES - AUDITORIUM, STAGE, AND RELATED SPACES - IN ADDITION TO BRANCH CIRCUIT WIRING.
3. LOOP DMX CABLE IN 3/4"C TO ALL "NORMAL" FIXTURES ON THIS CONTROL ZONE; ONLY CONTROL HOMERUN SHOWN FOR CLARITY; ROUTE HOMERUN TO ARP-3 RELAY PANEL - SEE 1/E-PL5.01.
4. LOOP BRANCH CIRCUIT IN 3/4"C TO ALL "NORMAL" FIXTURES ON THIS CONTROL ZONE; ROUTE TO ARP-3 PANEL INDICATED - SEE 1/E-5.4 & 1/E-PL5.01.
5. LOOP DMX CABLE IN 3/4"C TO ALL "EMERGENCY" FIXTURES ON THIS CONTROL ZONE; ONLY CONTROL HOMERUN SHOWN FOR CLARITY; ROUTE HOMERUN TO ARP-3 RELAY PANEL VIA DMX EMERGENCY BYPASS CONTROLLER - SEE 1/E-PL5.01.
6. LOOP BRANCH CIRCUIT IN 3/4"C TO ALL "EMERGENCY" FIXTURES ON THIS CONTROL ZONE; ONLY HOMERUN SHOWN FOR CLARITY; ROUTE TO INVERTER CIRCUIT INDICATED AND ARP-3 RELAY PANEL VIA U.L 1008 TRANSFER SYSTEM - SEE 1/E-PL5.01.
7. LOOP DMX CABLE IN 3/4"C TO ALL FIXTURES ON THIS CONTROL ZONE; ONLY CONTROL HOMERUN SHOWN FOR CLARITY; ROUTE TO ARP-3 RELAY PANEL - SEE 1/E-PL5.01.
8. LOOP BRANCH CIRCUIT IN 3/4"C TO ALL FIXTURES ON THIS CONTROL ZONE; ONLY HOMERUN SHOWN FOR CLARITY; ROUTE TO ARP-3 RELAY PANEL.
9. LUMINAIRE 'W5' TYPICAL. MOUNT VERTICALLY 30" O.C. WITH CENTER OF LUMINAIRE AT 1'-6" ABOVE COUNTERS.
10. LUMINAIRE 'W5A' TYPICAL. MOUNT HORIZONTALLY WITH CENTER OF LUMINAIRE AT 5'-9" ABOVE COUNTERS.
11. MOUNT CENTER OF LUMINAIRE AT 2'-0" A.F.F.
12. WALL MOUNTED AT 15'-0" A.F.G. TO CENTER OF LUMINAIRE.
13. SEE DETAIL 7/E-7.2 FOR MOUNTING.
14. SUSPEND BOTTOM OF LUMINAIRES 2'-0" FROM CEILING. SEE DETAIL 5/E-7.5.
15. WALL MOUNTED AT 7'-0" A.F.F. TO CENTER OF LUMINAIRE.
16. WALL MOUNTED AT 17'-0" A.F.F. TO CENTER OF LUMINAIRE.
17. RECESS MOUNTED AT 4'-0" ABOVE ORCHESTRA PIT FLOOR.
18. SURFACE MOUNTED TO STRUCTURE.
19. LOOP 0-10V CABLE IN 3/4"C TO ALL FIXTURES ON THIS CONTROL ZONE; ONLY HOMERUN SHOWN FOR CLARITY; ROUTE TO ARP-3 RELAY PANEL.
20. EMERGENCY PORTION OF THE LUMINAIRE IS FOR THE DOWNLIGHT COMPONENT ONLY.
21. DIGITAL NETWORK SEGMENT MANAGER WITH INTEGRAL TIMECLOCK FOR CONTROLLING EXTERIOR LOADS AND PROVIDING DEMAND RESPONSE CAPABILITY. SEE E-5.5.
22. DIGITAL DIMMER SWITCH LMDM-101 WITH CUSTOM PROGRAMMING. LABEL DIMMER "PERFORMANCE START." WHEN DIMMER IS TAPPED, IT SHALL TRIGGER A SCENE PRESET FOR THE 'P4' AND 'C2A' LOBBY LUMINAIRES AS FOLLOWS: LUMINAIRES SHALL BEGIN A SLOW FADE RATE OF 5 SECONDS DIMMING TO 50% AND 5 SECONDS RAISING TO 100% REPEATING THE SEQUENCE MULTIPLE TIMES; EXACT NUMBER OF TIMES TO BE DETERMINED DURING COMMISSIONING.
23. PROVIDE AND INSTALL DIMMER SWITCH(ES), OCCUPANCY SENSOR(S), ISOLATED RELAY(S), NETWORK BRIDGE(S), PHOTOSENSOR(S), PLUG CONTROLLERS AND ROOM CONTROLLERS WHERE SHOWN. SEE DETAILS ON SHEET E-5.5. MOUNT ROOM CONTROLLER HIGH ON WALL OR IN ACCESSIBLE CEILING.
24. EXTERIOR LIGHTING OVERRIDE SWITCHES AND DIMMERS. LABEL BUTTONS 'EXTERIOR LTS'.
25. ROOM CONTROLLERS AND NETWORK BRIDGE FOR EXTERIOR LIGHTS.
26. PROVIDE AN EMERGENCY LIGHTING CONTROL MODULE FOR ALL SWITCHED LIGHT FIXTURES ON EMERGENCY INVERTER. THIS INCLUDES EMERGENCY FIXTURES CONTROLLED BY OCCUPANCY SENSORS. SEE DETAILS ON E-5.5. MOUNT CONTROL MODULE/TEST SWITCH 7'-6" A.F.F. AND ALIGN WITH LIGHT SWITCH BELOW WHEREVER POSSIBLE.
27. REMOTE STATUS PANEL FOR INVERTER 'INV2'.
28. ROOM CONTROLLER AND NETWORK BRIDGE FOR CORRIDOR 109.
29. ROOM CONTROLLERS FOR LOBBY.
30. ROOM CONTROLLERS FOR MEN'S WOMEN'S AND VESTIBULES.
31. MOUNT BOTTOM OF LUMINAIRE AT 14'-0" A.F.F. PROVIDE AND INSTALL SWAY BRACING. SEE DETAIL 6/E-7.2 FOR SWAY BRACING AND 1/E-7.7 FOR MOUNTING.
32. ALL LUMINAIRES RECESSED IN SUSPENDED GRID CEILINGS, SEE DETAIL 5/E-7.2.
33. AIRCRAFT CABLE SUSPENDED ON 12" LONG CABLE. SEE 3/E-7.7 FOR MOUNTING.
34. SURFACE MOUNT TO UNDERSIDE OF EXTERIOR CANOPY. SEE 4/E7.7.
35. THE E.C. SHALL COORDINATE WITH THE G.C., PRIOR TO INSTALLATION OF CEILING/SOFFIT FRAMING, TO ENSURE PROVISION OF ADEQUATELY SIZED FRAMED OPENING TO ACCOMMODATE ALL RECESSED DOWNLIGHT AND WALL-WASH HOUSINGS AT LOCATIONS SHOWN ON PLANS.
36. MOUNTED AT TOP OF TROPHY CASE TIGHT TO FACE FRAME, CONCEALED FROM NORMAL VIEWING ANGLES, AND ORIENTED TO LIGHT BACK AND DOWN INTO TROPHY CASE.
37. REMOTE DRIVER FOR TROPHY CASE LIGHTING IN VENTILATED ENCLOSURE. MOUNT OUT OF SIGHT IN AN ACCESSIBLE LOCATION. PROVIDE PERMANENTLY AFFIXED LABEL WITH DESCRIPTION OF LOAD SERVED.
38. DAISY CHAIN ALL NETWORK BRIDGES TOGETHER VIA MSTP CABLE AND HOMERUN TO SEGMENT MANAGER.
39. MOUNTED IN ELEVATOR PIT. COORDINATE EXACT LOCATION OF LUMINAIRES AND ASSOCIATED WEATHER-PROOF SWITCH WITH ELEVATOR VENDOR PRIOR TO ROUGH-IN.

QUATTROCCHI KWOK ARCHITECTS
Main Office:
636 Fifth Street, Santa Rosa, CA 95404
Pleasanton Office:
600 Main Street, Suite E,
Pleasanton, CA 94566
(707) 576-0829

O'MAHONY & MYER
ELECTRICAL ENGINEERING and LIGHTING DESIGN
4340 REDWOOD HWY., SUITE 245
SAN RAFAEL, CALIFORNIA 94903
(415) 492-0420/FAX (415) 479-9602
www.ommconsulting.com

REGISTERED PROFESSIONAL ENGINEER — PAUL J. COLEMAN — No. 14738 Exp. 6/21 — ELECTRICAL — STATE OF CALIFORNIA

FREEDOM HIGH SCHOOL

PERFORMING ARTS AND CTE FACILITIES

1050 NEROLY RD
OAKLEY, CA 94561

LIBERTY UNION HIGH SCHOOL DISTRICT

	DSA	2015

ARCH PROJECT NO:	1739.00
DRAWN BY:	TV/LN/ME
DRAWING SCALE:	
PTN:	61721-0068

BID SET

JUNE 28, 2019

SHEET TITLE

BUILDING A - FIRST FLOOR PLAN - LIGHTING - PAC

SHEET NUMBER

E-A2.1

FREEDOM HS PERFORMING ARTS CENTER AND CTE - 218054

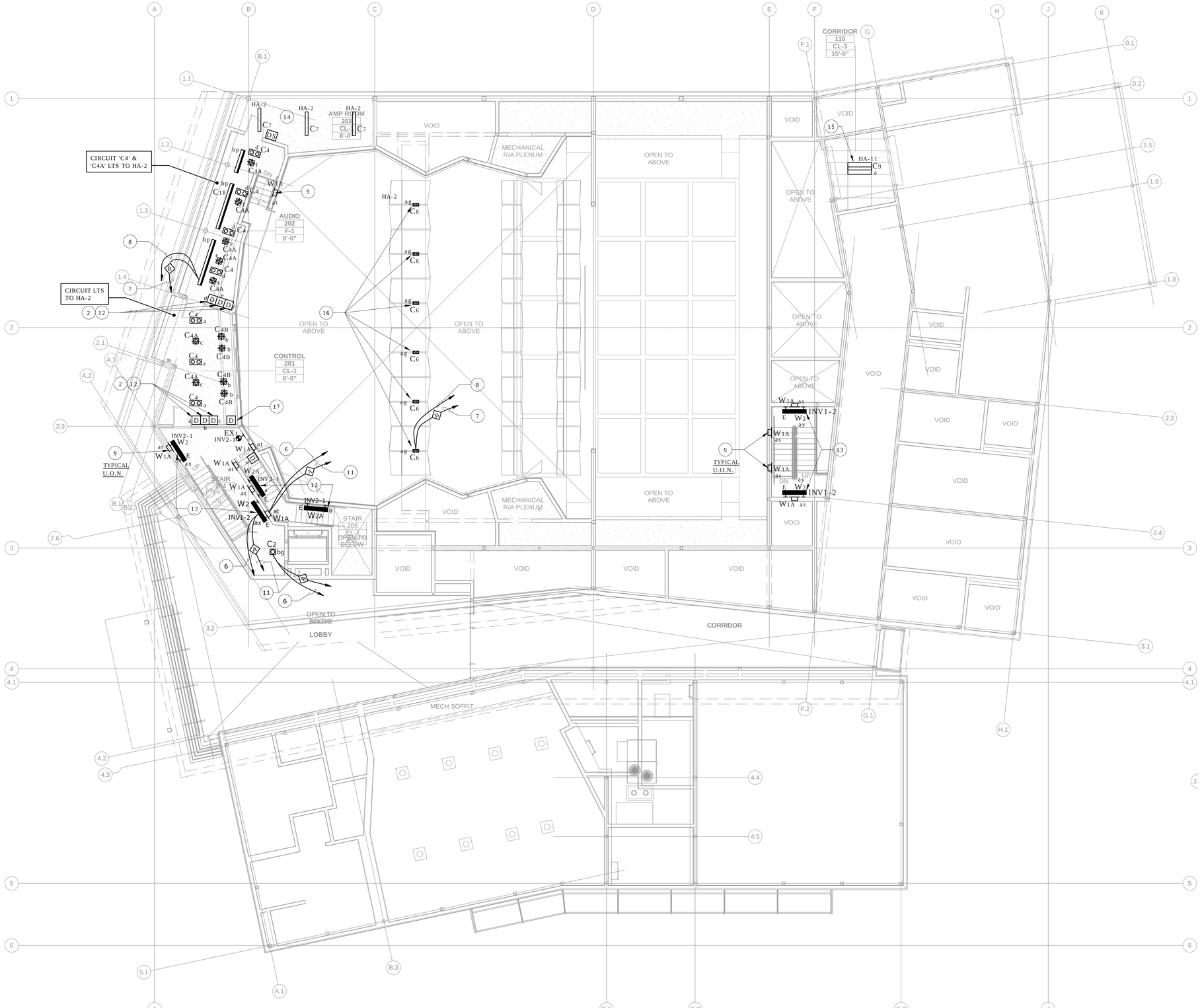

BUILDING A - CONTROL BOOTH LEVEL PLAN - LIGHTING - PAC

SCALE 1/8" = 1' - 0"

1 E-2.3

NUMBERED SHEET NOTES

1. SEE ARCHITECTURAL RELAY PANEL ARP-3 SCHEDULE ON SHEET E-5.4 FOR CONTROL ZONE RELAY ASSIGNMENT.
2. PROVIDE 0-10V TYPE A WIRING TO ALL FIXTURES OUTSIDE OF THE THEATRICAL SPACES - AUDITORIUM, STAGE, AND RELATED SPACES - IN ADDITION TO BRANCH CIRCUIT WIRING.
3. LOOP DMX CABLE IN 3/4"C TO ALL "NORMAL" FIXTURES ON THIS CONTROL ZONE; ONLY CONTROL HOMERUN SHOWN FOR CLARITY; ROUTE HOMERUN TO ARP-3 RELAY PANEL - SEE 1/E-PL5.01.
4. LOOP BRANCH CIRCUIT IN 3/4"C TO ALL "NORMAL" FIXTURES ON THIS CONTROL ZONE; ROUTE TO ARP-3 PANEL INDICATED - SEE 1/E-5.4 & 1/E-PL5.01.
5. LOOP DMX CABLE IN 3/4"C TO ALL "EMERGENCY" FIXTURES ON THIS CONTROL ZONE; ONLY CONTROL HOMERUN SHOWN FOR CLARITY; ROUTE HOMERUN TO ARP-3 RELAY PANEL VIA DMX EMERGENCY BYPASS CONTROLLER - SEE 1/E-PL5.01.
6. LOOP BRANCH CIRCUIT IN 3/4"C TO ALL "EMERGENCY" FIXTURES ON THIS CONTROL ZONE; ONLY HOMERUN SHOWN FOR CLARITY; ROUTE TO INVERTER CIRCUIT INDICATED VIA U.L 924 TRANSFER MODULE DEDICATED TO THIS CONTROL ZONE - SEE 1/E-5.4 & 1/E-PL5.01.
7. LOOP DMX CABLE IN 3/4"C TO ALL FIXTURES ON THIS CONTROL ZONE; ONLY CONTROL HOMERUN SHOWN FOR CLARITY; ROUTE TO ARP-3 RELAY PANEL - SEE 1/E-PL5.01.
8. LOOP BRANCH CIRCUIT IN 3/4"C TO ALL FIXTURES ON THIS CONTROL ZONE; ONLY HOMERUN SHOWN FOR CLARITY; ROUTE TO ARP-3 RELAY PANEL.
9. WALL MOUNTED AT 2'-0" A.F.F.
10. NOT USED.
11. LOOP 0-10V CABLE IN 3/4"C TO ALL FIXTURES ON THIS CONTROL ZONE; ONLY HOMERUN SHOWN FOR CLARITY; ROUTE TO ARP-3 RELAY PANEL.
12. 0-10V PRESET SLIDE DIMMER; LUTRON #DVSTV-WH.
13. WALL MOUNTED AT 7'-0" ABOVE LANDING OR HIGHEST STAIR.
14. ALL 'C7', 'C7A', SEE DETAIL 7/E-7.2.
15. SAME SWITCH ZONE AS LIGHTS IN CORRIDOR 110, SEE E-A-2.1.
16. CENTERED ON GAP BETWEEN PANELS. CUT PANELS AS REQUIRED, GAP BETWEEN LUMINAIRE AND PANELS SHALL BE EQUAL TO GAP BETWEEN PANELS. SEE DETAIL 5/E-7.7.
17. LABEL DIMMER "PERFORMANCE START." SEE NOTE 22 ON E-A2.1.

WIRING KEY

- A — 0-10V CONTROL: (2)#14 AWG
- B — DMX CONTROL: BELDEN 9728

QUATTROCCHI KWOK ARCHITECTS
Main Office:
636 Fifth Street, Santa Rosa, CA 95404
Pleasanton Office:
600 Main Street, Suite E,
Pleasanton, CA 94566
(707) 576-0829

O'MAHONY & MYER
ELECTRICAL ENGINEERING and LIGHTING DESIGN
4340 REDWOOD HWY., SUITE 245
SAN RAFAEL, CALIFORNIA 94903
(415) 492-0420/FAX (415) 479-9662
www.ommconsulting.com

PAUL J. COLEMAN No.14738 Exp. 6/21 REGISTERED PROFESSIONAL ENGINEER ELECTRICAL STATE OF CALIFORNIA

FREEDOM HIGH SCHOOL

PERFORMING ARTS AND CTE FACILITIES

1050 NEROLY RD
OAKLEY, CA 94561

LIBERTY UNION HIGH SCHOOL DISTRICT

1	DSA	2019

ARCH PROJECT NO: 1739.00
DRAWN BY: TV/LN/ME
DRAWING SCALE:
PTN: 61721-0068

BID SET

JUNE 28, 2019

SHEET TITLE

BUILDING A - CONTROL BOOTH LEVEL PLAN - LIGHTING - PAC

SHEET NUMBER

E-A2.2

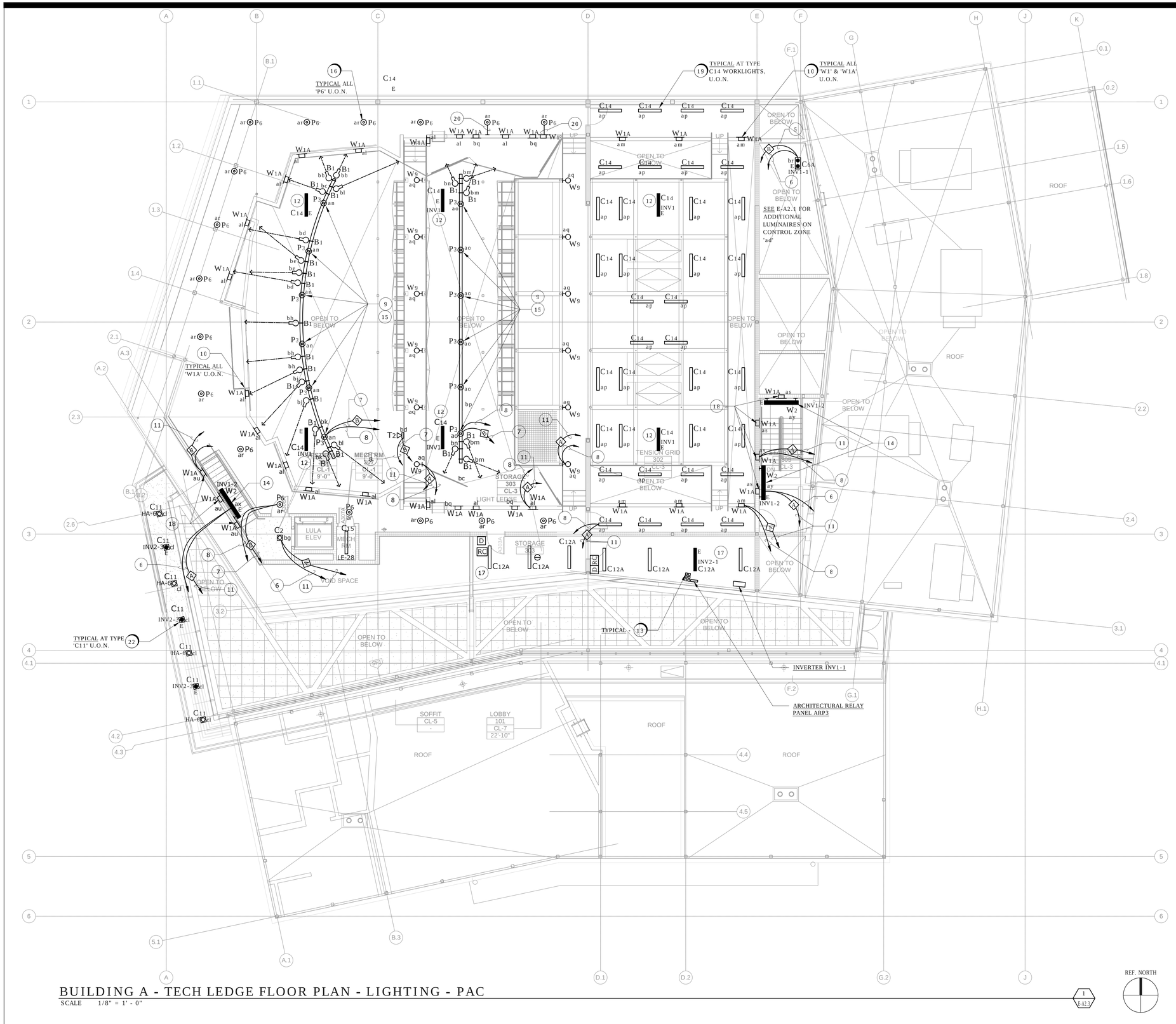

BUILDING A - TECH LEDGE FLOOR PLAN - LIGHTING - PAC

SCALE 1/8" = 1' - 0"

NUMBERED SHEET NOTES

1. SEE ARCHITECTURAL RELAY PANEL ARP-3 SCHEDULE ON SHEET E-5.4 FOR CONTROL ZONE RELAY ASSIGNMENT.
2. PROVIDE 0-10V TYPE A WIRING TO ALL FIXTURES OUTSIDE OF THE THEATRICAL SPACES - AUDITORIUM, STAGE, AND RELATED SPACES - IN ADDITION TO BRANCH CIRCUIT WIRING.
3. NOT USED.
4. NOT USED.
5. LOOP DMX CABLE IN 3/4"C TO ALL "EMERGENCY" FIXTURES ON THIS CONTROL ZONE; ONLY CONTROL HOMERUN SHOWN FOR CLARITY; ROUTE HOMERUN TO ARP-3 RELAY PANEL VIA DMX EMERGENCY BYPASS CONTROLLER - SEE 1/E-PL5.01.
6. LOOP BRANCH CIRCUIT IN 3/4"C TO ALL "EMERGENCY" FIXTURES ON THIS CONTROL ZONE; ONLY HOMERUN SHOWN FOR CLARITY: ROUTE TO INVERTER CIRCUIT INDICATED AND ARP-3 RELAY PANEL VIA U.L 924 TRANSFER SYSTEM - SEE 1/E-PL5.01.
7. LOOP DMX CABLE IN 3/4"C TO ALL FIXTURES ON THIS CONTROL ZONE; ONLY CONTROL HOMERUN SHOWN FOR CLARITY; ROUTE TO ARP-3 RELAY PANEL - SEE 1/E-PL5.01.
8. LOOP BRANCH CIRCUIT IN 3/4"C TO ALL FIXTURES ON THIS CONTROL ZONE; ONLY HOMERUN SHOWN FOR CLARITY; ROUTE TO ARP-3 RELAY PANEL - SEE 1/E-PL5.01 & 1/E-5.4.
9. INDICATED LUMINAIRES SHALL BE CLAMP-MOUNTED TO A LIGHTING BATTEN UNDER THE RIGGING WORK. CONTRACTOR SHALL PROVIDE AND INSTALL POWER PLUG AND DMX CONNECTOR TO LUMINAIRE AND CONNECT COMPLETE TO OUTLETS INSTALLED AT LIGHTING BATTEN.
10. TYPICAL: WALL MOUNTED AT 3'-0" A.F.F. TO CENTER OF LUMINAIRE.
11. LOOP 0-10V CABLE IN 3/4"C TO ALL FIXTURES ON THIS CONTROL ZONE; ONLY HOMERUN SHOWN FOR CLARITY; ROUTE TO ARP-3 RELAY PANEL.
12. TO INVERTER INV1- NORMALLY OFF CIRCUIT - LOOP BRANCH CIRCUIT TO ALL FIXTURES ON THIS BRANCH; NO DIMMING REQUIRED.
13. LOCATE U.L 924 EMERGENCY TRANSFER MODULES & DEBC UNIT ADJACENT RELAY PANEL - SEE SCHEDULE ON E-5.4 FOR QUANTITY AND SEE 1/E-5.4 & 1/E-PL5.01 FOR CONNECTION DIAGRAMS.
14. WALL MOUNTED AT 7'-0" ABOVE LANDING OR HIGHEST STAIR.
15. MOUNT BOTTOM OF 'P3' LUMINAIRES AT 23'-6" ABOVE FIRST FLOOR LEVEL.
16. SUSPENDED FROM EXPOSED CEILING DECK. SEE 4/E-7.2. MOUNT BOTTOM OF LUMINAIRE 18" BELOW CEILING DECK.
17. MOUNT BOTTOM OF LUMINAIRE AT 14'-0" A.F.F. PROVIDE SWAY BRACING. SEE DETAIL 6/E-7.2 FOR SWAY BRACING AND 4/E-7.2 FOR MOUNTING.
18. MOUNT CENTER OF LUMINAIRE AT 2'-0" A.F.F, UNLESS OTHERWISE NOTED.
19. SURFACE MOUNTED TO CEILING DECK.
20. PROVIDE SWAY BRACING DIAGONALLY TO CEILING TO PREVENT SWAY AT DUCT.
21. SURFACE MOUNTED TO CEILING DECK. AIM LUMINAIRE STRAIGHT DOWN.
22. RECESS MOUNTED AT EXTERIOR SOFFIT.

WIRING KEY

- A — 0-10V CONTROL: (2)#14 AWG
- B — DMX CONTROL: BELDEN 9728

QUATTROCCHI KWOK ARCHITECTS
Main Office:
636 Fifth Street, Santa Rosa, CA 95404
Pleasanton Office:
600 Main Street, Suite E,
Pleasanton, CA 94566
(707) 576-0829

O'MAHONY & MYER
ELECTRICAL ENGINEERING and LIGHTING DESIGN
4340 REDWOOD HWY., SUITE 245
SAN RAFAEL, CALIFORNIA 94903
(415) 492-0420/FAX (415) 479-9602
www.ommconsulting.com

PAUL J. COLEMAN No. 14738 Exp. 6/21 REGISTERED PROFESSIONAL ENGINEER ELECTRICAL STATE OF CALIFORNIA

FREEDOM HIGH SCHOOL

PERFORMING ARTS AND CTE FACILITIES

1050 NEROLY RD
OAKLEY, CA 94561

LIBERTY UNION HIGH SCHOOL DISTRICT

1	DSA	2019

ARCH PROJECT NO: 1739.00
DRAWN BY: TV/LN/ME
DRAWING SCALE:
PTN: 61721-0068

BID SET

JUNE 28, 2019

SHEET TITLE

BUILDING A - TECH LEDGE FLOOR PLAN - LIGHTING - PAC

SHEET NUMBER

E-A2.3

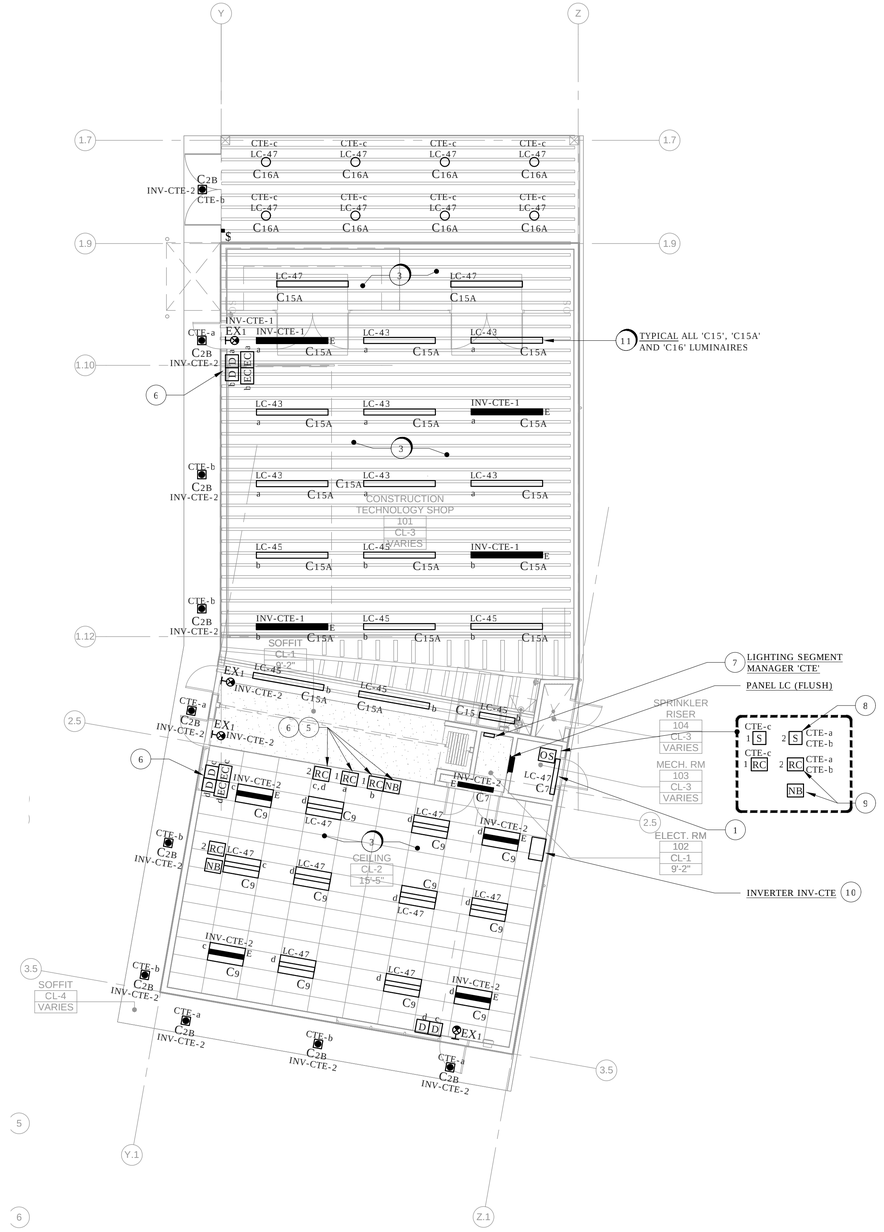

BUILDING B - 1ST FLOOR PLAN - LIGHTING - CTE

SCALE 1/8" = 1' - 0"

1 / E-B2.1

NUMBERED SHEET NOTES

1. WALL MOUNTED WITH CENTER OF LUMINAIRE 6" ABOVE DOOR FRAME.
2. WEATHERPROOF OCCUPANCY SENSOR; WATTSTOPPER #CB-100. MOUNT ON WALL 7'-6" A.F.F.
3. FOR SAFETY REASONS, THIS AREA SHALL NOT HAVE AUTOMATIC SHUT-OFF CONTROLS.
4. MASK LENS OF OCCUPANCY SENSOR TOWARDS CONSTRUCTION LAB SIDE TO PREVENT FALSE 'ON' TRIGGERING.
5. ROOM CONTROLLER AND NETWORK BRIDGE FOR CONSTRUCTION LAB.
6. PROVIDE AND INSTALL DIMMER SWITCH(ES), NETWORK BRIDGE(S), AND ROOM CONTROLLERS WHERE SHOWN. SEE DETAILS ON SHEET E-5.5.
7. DIGITAL NETWORK SEGMENT MANAGER WITH INTEGRAL TIMECLOCK FOR CONTROLLING EXTERIOR LOADS AND PROVIDING DEMAND RESPONSE CAPABILITY. SEE 3/E-5.5.
8. EXTERIOR LIGHTING OVERRIDE SWITCH. LABEL BUTTONS 'EXTERIOR LTS'.
9. ROOM CONTROLLER AND NETWORK BRIDGE FOR EXTERIOR LIGHTS.
10. SEE E-6.1 FOR INVERTER SPECIFICATIONS.
11. SURFACE MOUNTED TO EXPOSED CEILING FRAMING. PROVIDE AND INSTALL BLOCKING AS REQUIRED.

QUATTROCCHI KWOK ARCHITECTS
Main Office:
636 Fifth Street, Santa Rosa, CA 95404
Pleasanton Office:
600 Main Street, Suite E,
Pleasanton, CA 94566
(707) 576-0829

O'MAHONY & MYER
ELECTRICAL ENGINEERING and LIGHTING DESIGN
4340 REDWOOD HWY., SUITE 245
SAN RAFAEL, CALIFORNIA 94903
(415) 492-0420/FAX (415) 479-9602
www.ommconsulting.com

REGISTERED PROFESSIONAL ENGINEER PAUL J. COLEMAN No.14738 Exp. 6/21 ELECTRICAL STATE OF CALIFORNIA

FREEDOM HIGH SCHOOL

PERFORMING ARTS AND CTE FACILITIES

1050 NEROLY RD
OAKLEY, CA 94561

LIBERTY UNION HIGH SCHOOL DISTRICT

	DSA	2019

ARCH PROJECT NO: 1739.00
DRAWN BY: TV/LN/ME
DRAWING SCALE:
PTN: 61721-0068

BID SET

JUNE 28, 2019

SHEET TITLE

BUILDING B - FIRST FLOOR PLAN - LIGHTING - CTE

SHEET NUMBER

E-B2.1

FREEDOM HS PERFORMING ARTS CENTER AND CTE - 218054

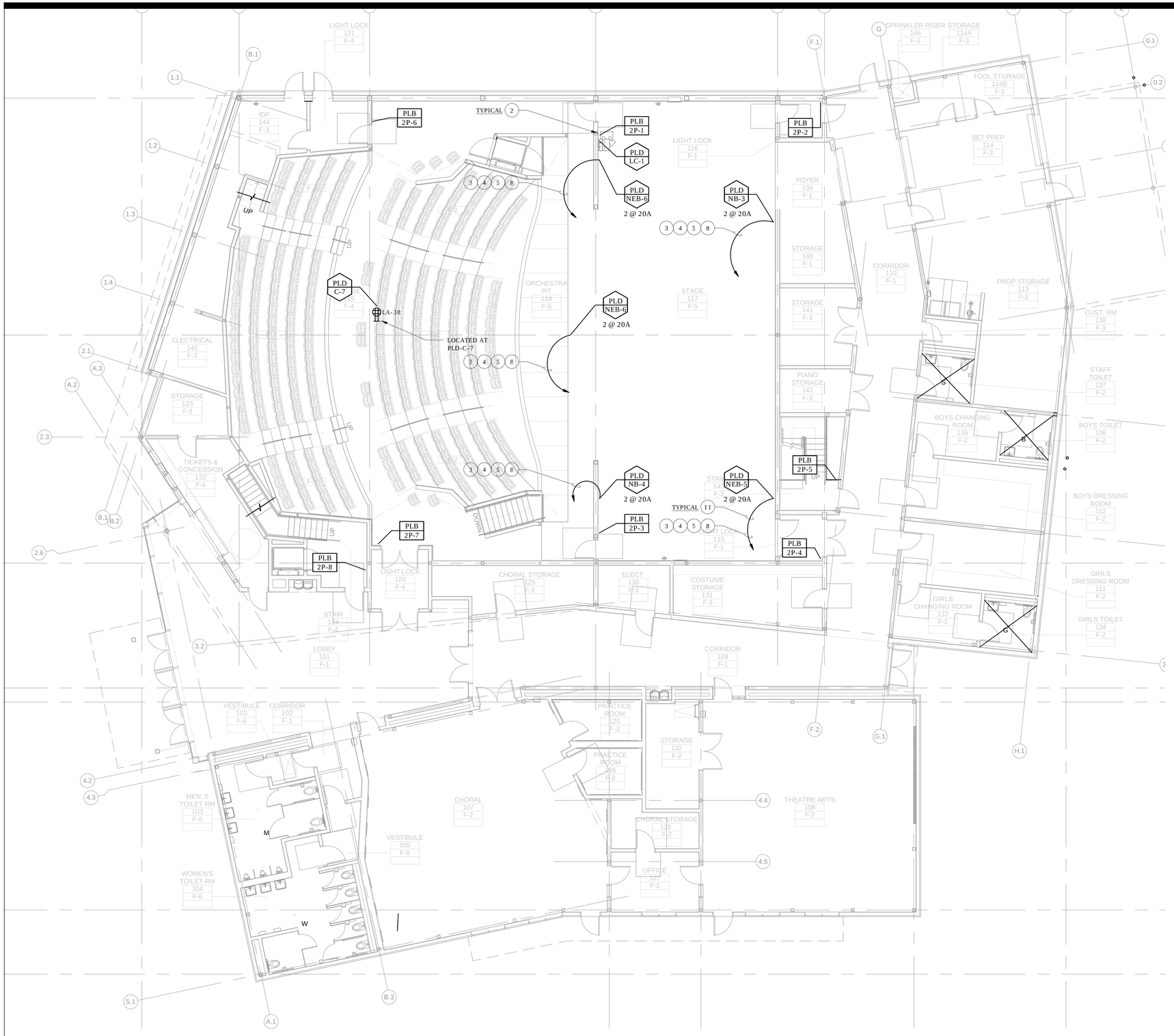

PRODUCTION LIGHTING PLAN AT LEVEL 1

SCALE 1/8" = 1' - 0"

1 E-PL1.01

GENERAL NOTES (FOR SHEETS E-PL1.01, E-PL1.02 & E-PL1.02)

1. THE PRODUCTION LIGHTING SYSTEM SHOWN ON THIS SHEET IS BASED ON A "RELAY PER CIRCUIT" CONCEPT. EACH THEATRICAL LIGHTING POWER DEVICE SHALL BE WIRED TO A DEDICATED RELAY WITH THE ASSIGNED DMX NUMBER. SEE PL DRAWINGS FOR DEVICE AND RELAY SCHEDULES.
2. ALL CONDUIT, WIRE, BACKBOXES, AND EQUIPMENT SHALL BE INSTALLED AND CONNECTED COMPLETE BY DIVISION 26 UNLESS OTHERWISE NOTED: EXCEPT CONTROL WIRE TERMINATIONS BY PRODUCTION LIGHTING CONTRACTOR.
3. ALL DEVICES AND EQUIPMENT SHALL BE PROVIDED UNDER DIVISION 11 AND INSTALLED UNDER DIVISION 26.
4. VERIFY EXACT SIZES OF BACKBOXES AND FINAL WIRE TYPES AND QUANTITIES WITH THE PRODUCTION LIGHTING CONTRACT PRIOR TO INSTALLATION.
5. ALL DEVICE BRANCH CIRCUITS SHALL HAVE INDIVIDUAL HOT AND NEUTRAL CONDUCTORS HOMERUN TO THE RELAY PANELS AND DEDICATED GROUND PER DEVICE BOX.
6. ALL EXPOSED ELEMENTS TO BE FINISHED FLAT BLACK UNLESS OTHERWISE NOTED.
7. CONDUIT OR CONDUIT SUPPORTS WILL NOT BE PERMITTED ON TRUSSES, OVERHEAD RIGGING GRIDS, ACROSS THEATRICAL LIGHTING POSITIONS, AND ON HORIZONTAL PIPE RAILINGS.
8. COORDINATE LOCATION AND ROUTING OF ALL CONDUIT WITH THE THEATRICAL RIGGING CONTRACTOR. REFER TO THE TR SERIES DRAWINGS FOR ADDITIONAL INFORMATION.
9. SUBMIT CONDUIT ROUTING SHOP DRAWINGS FOR APPROVAL PRIOR TO ROUGH-IN.
10. MAINTAIN REQUIRED SEPARATION BETWEEN ALL PRODUCTION LIGHTING, POWER, AND CONTROL CONDUITS AND ALL A/V SYSTEM CONDUIT AND CABLE SYSTEMS. SEE CONDUIT SEPARATION TABLES ON THE A/V CONSULTANT'S DRAWINGS FOR ALL REQUIREMENTS.

SEE E-PL1.02 FOR NUMBERED SHEET NOTES FOR THIS SHEET.

PRODUCTION LIGHTING SYMBOL KEY

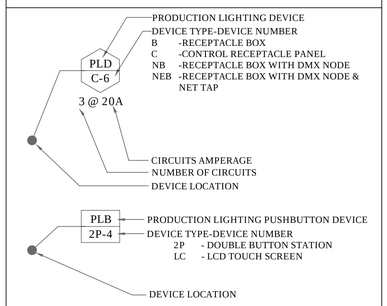

LIGHTING GENERAL NOTES

1. THIS SHEET IS INTENDED TO PROVIDE PRODUCTION LIGHTING SYSTEM INFORMATION ONLY. REFERENCE OTHER PRODUCTION SYSTEMS, ARCHITECTURAL AND ENGINEERING DOCUMENTS FOR RELATED AREAS.
2. REFERENCE SPECIFICATIONS AND ELECTRICAL DRAWINGS FOR DIVISION 26 INSTALLATION REQUIREMENTS
3. ALL CIRCUITS SHALL HAVE A DEDICATED HOMERUN UNLESS OTHERWISE INDICATED.
4. ALL CIRCUITS SHALL HAVE A DEDICATED NEUTRAL. ALL POWER DEVICE BOXES SHALL HAVE AT LEAST ONE DEDICATED GROUND HOMERUN TO THE DIMMER RACK.

ABBREVIATIONS

VIF = VERIFY IN FIELD
SAD = SEE ARCHITECTURAL DRAWINGS
SSD = SEE STRUCTURAL DRAWINGS
SMD = SEE MECHANICAL DRAWINGS
SED = SEE ELECTRICAL DRAWINGS
AFF = ABOVE FINISHED FLOOR
NIC = NOT IN CONTRACT
HT = HEIGHT
TYP = TYPICAL
RWL = RECOMMENDED WORKING LOAD
UON = UNLESS OTHERWISE NOTED
CLR = CLEAR
HL = HOUSE LEFT
HR = HOUSE RIGHT
SR = STAGE RIGHT
SL = STAGE LEFT
SIM. = SIMILAR
OPP. = OPPOSITE
NTS = NOT TO SCALE
MIN = MINIMUM
MAX = MAXIMUM

QUATTROCCHI KWOK ARCHITECTS
Main Office:
636 Fifth Street, Santa Rosa, CA 95404
Pleasanton Office:
600 Main Street, Suite E,
Pleasanton, CA 94566
(707) 576-0829

O'MAHONY & MYER
ELECTRICAL ENGINEERING and LIGHTING DESIGN
4340 REDWOOD HWY., SUITE 245
SAN RAFAEL, CALIFORNIA 94903
(415) 492-0420/FAX (415) 479-9602
www.ommconsulting.com

PAUL J. COLEMAN No. 14738 Exp. 6/21 REGISTERED PROFESSIONAL ENGINEER ELECTRICAL STATE OF CALIFORNIA

FREEDOM HIGH SCHOOL

PERFORMING ARTS AND CTE FACILITIES

1050 NEROLY RD
OAKLEY, CA 94561

LIBERTY UNION HIGH SCHOOL DISTRICT

	DSA	2019

ARCH PROJECT NO: 1739.00
DRAWN BY: TV/LN/ME
DRAWING SCALE:
PTN: 61721-0068

BID SET

JUNE 28, 2019

SHEET TITLE

PRODUCTION LIGHTING PLAN AT LEVEL 1 - ELECTRICAL

SHEET NUMBER

E-PL-1.01

FREEDOM HS PERFORMING ARTS CENTER AND CTE - 218054



PRODUCTION LIGHTING PLAN AT BOOTH AT LEVEL 2

SCALE 1/8" = 1' - 0"

1 E-PL1.02

NUM. SHEET NOTES (FOR SHEETS E-PL1.01, E-PL1.02 & E-PL1.03)

1. CIRCUIT TO STANDARD POWER PANEL BOARD LB AS NOTED.
2. SEE SHEET E-PL5.01 FOR CONTROL CONDUIT, WIRE, AND CONNECTION REQUIREMENTS FOR ALL PRODUCTION LIGHTING CONTROL DEVICES THIS SHEET.
3. ROUTE ALL HOMERUNS VIA GUTTER ABOVE RELAY PANELS.
4. PROVIDE AND INSTALL 12"D x 18"H x 60"L GUTTER ABOVE THE RELAY PANELS FOR THE HOMERUN WIRING TO THE PANELS. PROVIDE MINIMUM (3) 2" CHASE NIPPLES FROM GUTTER TO EACH RELAY PANEL.
5. PROVIDE AND INSTALL (4)#10, (1)#12G IN 3/4" CONDUIT TO THE THEATRICAL RELAY PANEL AND CONNECT COMPLETE AT THE PANEL AND AT THE PLUG BOX.
6. PROVIDE AND INSTALL (12)#10, (1)#12G IN 1" CONDUIT TO THE THEATRICAL RELAY PANEL AND CONNECT COMPLETE AT THE PANEL AND AT THE PLUG BOX.
7. PROVIDE AND INSTALL (24)#10, (1)#12G IN 1 1/2" CONDUIT TO THE THEATRICAL RELAY PANEL AND CONNECT COMPLETE AT THE PANEL AND AT THE PLUG BOX.
8. SEE E-PL1.03 FOR LOCATION OF RELAY PANELS.
9. NOT USED.
10. NOT USED.
11. DEDICATED NEUTRAL REQUIRED FOR EACH CIRCUIT. SEE THEATRICAL LIGHTING DISTRIBUTION SCHEDULES ON THE 'PL' DRAWINGS FOR TERMINATIONS AT RELAY PANEL TRP1 AND TRP2 AND E-5.3 FOR TERMINATIONS AT RELAY PANEL ARP3.
12. FOLLOW SPOT POWER OUTLET - 125/250V 5PG 20A NEMA L21-20R. CONFIRM EXACT LOCATION.

PRODUCTION LIGHTING SYMBOL KEY

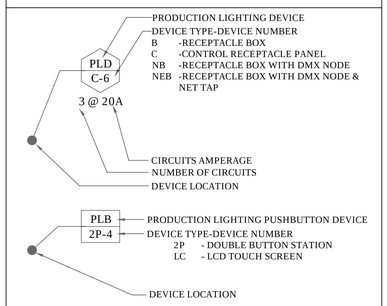

LIGHTING GENERAL NOTES

1. THIS SHEET IS INTENDED TO PROVIDE PRODUCTION LIGHTING SYSTEM INFORMATION ONLY. REFERENCE OTHER PRODUCTION SYSTEMS, ARCHITECTURAL AND ENGINEERING DOCUMENTS FOR RELATED AREAS.
2. REFERENCE SPECIFICATIONS AND ELECTRICAL DRAWINGS FOR DIVISION 26 INSTALLATION REQUIREMENTS
3. ALL CIRCUITS SHALL HAVE A DEDICATED HOMERUN UNLESS OTHERWISE INDICATED.
4. ALL CIRCUITS SHALL HAVE A DEDICATED NEUTRAL. ALL POWER DEVICE BOXES SHALL HAVE AT LEAST ONE DEDICATED GROUND HOMERUN TO THE DIMMER RACK.

ABBREVIATIONS

VIF = VERIFY IN FIELD
SAD = SEE ARCHITECTURAL DRAWINGS
SSD = SEE STRUCTURAL DRAWINGS
SMD = SEE MECHANICAL DRAWINGS
SED = SEE ELECTRICAL DRAWINGS
AFF = ABOVE FINISHED FLOOR
NIC = NOT IN CONTRACT
HT = HEIGHT
TYP = TYPICAL
RWL = RECOMMENDED WORKING LOAD
UON = UNLESS OTHERWISE NOTED
CLR = CLEAR
HL = HOUSE LEFT
HR = HOUSE RIGHT
SR = STAGE RIGHT
SL = STAGE LEFT
SIM. = SIMILAR
OPP. = OPPOSITE
NTS = NOT TO SCALE
MIN = MINIMUM
MAX = MAXIMUM

QUATTROCCHI KWOK ARCHITECTS
Main Office:
636 Fifth Street, Santa Rosa, CA 95404
Pleasanton Office:
600 Main Street, Suite E,
Pleasanton, CA 94566
(707) 576-0829

O'MAHONY & MYER
ELECTRICAL ENGINEERING and LIGHTING DESIGN
4340 REDWOOD HWY., SUITE 245
SAN RAFAEL, CALIFORNIA 94903
(415) 492-0420/FAX (415) 479-9602
www.ommconsulting.com

PAUL J. COLEMAN REGISTERED PROFESSIONAL ENGINEER No. 14738 Exp. 6/21 ELECTRICAL STATE OF CALIFORNIA

FREEDOM HIGH SCHOOL

PERFORMING ARTS AND CTE FACILITIES

1050 NEROLY RD
OAKLEY, CA 94561

LIBERTY UNION HIGH SCHOOL DISTRICT

1	DSA	2019

ARCH PROJECT NO: 1739.00
DRAWN BY: TV/LN/ME
DRAWING SCALE:
PTN: 61721-0068

BID SET

JUNE 28, 2019

SHEET TITLE

PRODUCTION LIGHTING PLAN AT LEVEL 2 - ELECTRICAL

SHEET NUMBER

E-PL-1.02

FREEDOM HS PERFORMING ARTS CENTER AND CTE - 218054

PROVIDE TERMINAL BOX FOR EMERGENCY & NON-EMERGENCY ARCHITECTURAL CIRCUITS AT LIGHTING HOIST.
PROVIDE SEPARATION OF EMERENCY & NON-EMERGENCY DMX CONTROL SIGNAL, AS REQUIRED BY CODE.

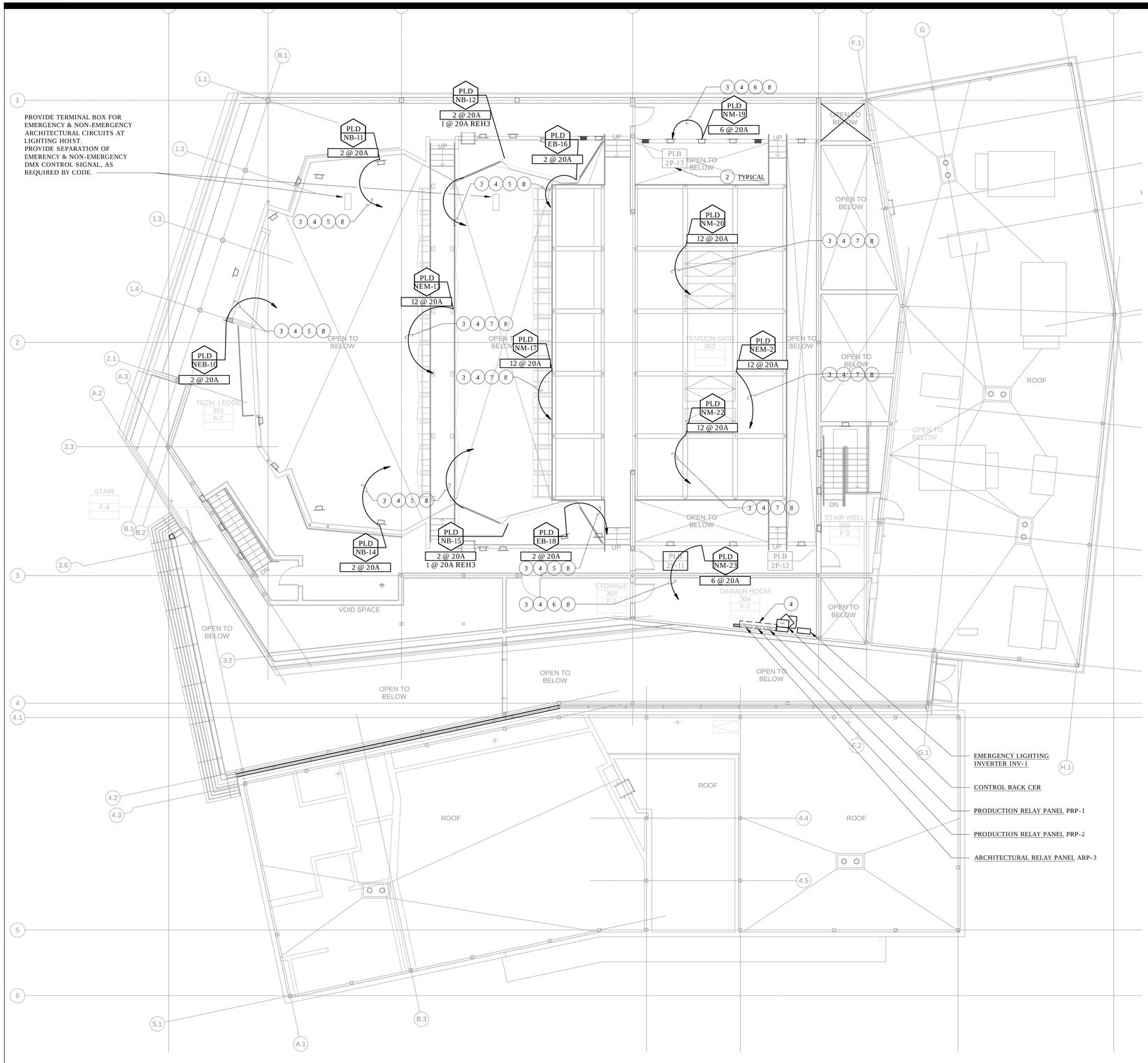

EMERGENCY LIGHTING INVERTER INV-1

CONTROL RACK CER

PRODUCTION RELAY PANEL PRP-1

PRODUCTION RELAY PANEL PRP-2

ARCHITECTURAL RELAY PANEL ARP-3

PRODUCTION LIGHTING PLAN AT LEVEL 3

SCALE 1/8" = 1' - 0"

1 E-PL1.03

SEE E-PL1.02 FOR NUMBERED SHEET NOTES FOR THIS SHEET.

PRODUCTION LIGHTING SYMBOL KEY

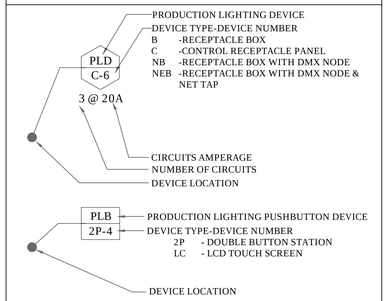

LIGHTING GENERAL NOTES

1. THIS SHEET IS INTENDED TO PROVIDE PRODUCTION LIGHTING SYSTEM INFORMATION ONLY. REFERENCE OTHER PRODUCTION SYSTEMS, ARCHITECTURAL AND ENGINEERING DOCUMENTS FOR RELATED AREAS.
2. REFERENCE SPECIFICATIONS AND ELECTRICAL DRAWINGS FOR DIVISION 26 INSTALLATION REQUIREMENTS
3. ALL CIRCUITS SHALL HAVE A DEDICATED HOMERUN UNLESS OTHERWISE INDICATED.
4. ALL CIRCUITS SHALL HAVE A DEDICATED NEUTRAL. ALL POWER DEVICE BOXES SHALL HAVE AT LEAST ONE DEDICATED GROUND HOMERUN TO THE DIMMER RACK.

ABBREVIATIONS

VIF = VERIFY IN FIELD
SAD = SEE ARCHITECTURAL DRAWINGS
SSD = SEE STRUCTURAL DRAWINGS
SMD = SEE MECHANICAL DRAWINGS
SED = SEE ELECTRICAL DRAWINGS
AFF = ABOVE FINISHED FLOOR
NIC = NOT IN CONTRACT
HT = HEIGHT
TYP = TYPICAL
RWL = RECOMMENDED WORKING LOAD
UON = UNLESS OTHERWISE NOTED
CLR = CLEAR
HL = HOUSE LEFT
HR = HOUSE RIGHT
SR = STAGE RIGHT
SL = STAGE LEFT
SIM. = SIMILAR
OPP. = OPPOSITE
NTS = NOT TO SCALE
MIN = MINIMUM
MAX = MAXIMUM

QUATTROCCHI KWOK ARCHITECTS
Main Office:
636 Fifth Street, Santa Rosa, CA 95404
Pleasanton Office:
600 Main Street, Suite E,
Pleasanton, CA 94566
(707) 576-0829

O'MAHONY & MYER
ELECTRICAL ENGINEERING and LIGHTING DESIGN
4340 REDWOOD HWY., SUITE 245
SAN RAFAEL, CALIFORNIA 94903
(415) 492-0420/FAX (415) 479-9602
www.ommconsulting.com

PAUL J. COLEMAN No. 14738 Exp. 6/21 REGISTERED PROFESSIONAL ENGINEER ELECTRICAL STATE OF CALIFORNIA

FREEDOM HIGH SCHOOL

PERFORMING ARTS AND CTE FACILITIES

1050 NEROLY RD
OAKLEY, CA 94561

LIBERTY UNION HIGH SCHOOL DISTRICT

1	DSA	2019

ARCH PROJECT NO: 1739.00
DRAWN BY: TV/LN/ME
DRAWING SCALE:
PTN: 61721-0068

BID SET

JUNE 28, 2019

SHEET TITLE
PRODUCTION LIGHTING PLAN AT LEVEL 3 - ELECTRICAL

SHEET NUMBER
E-PL-1.03

ALL CONDUIT FOR LOW VOLTAGE PLC DEVICES SHALL BE 1" MIN DIAMETER UNLESS OTHERWISE NOTED

ALL LOW VOLTAGE WIRE PROVIDED, INSTALLED, AND TERMINATED BY DIVISION 26.
STANDARD BACKBOXES PROVIDED BY DIVISION 26,
UNLESS SURFACE MOUNTED OR A CUSTOM SPECIALTY BOX

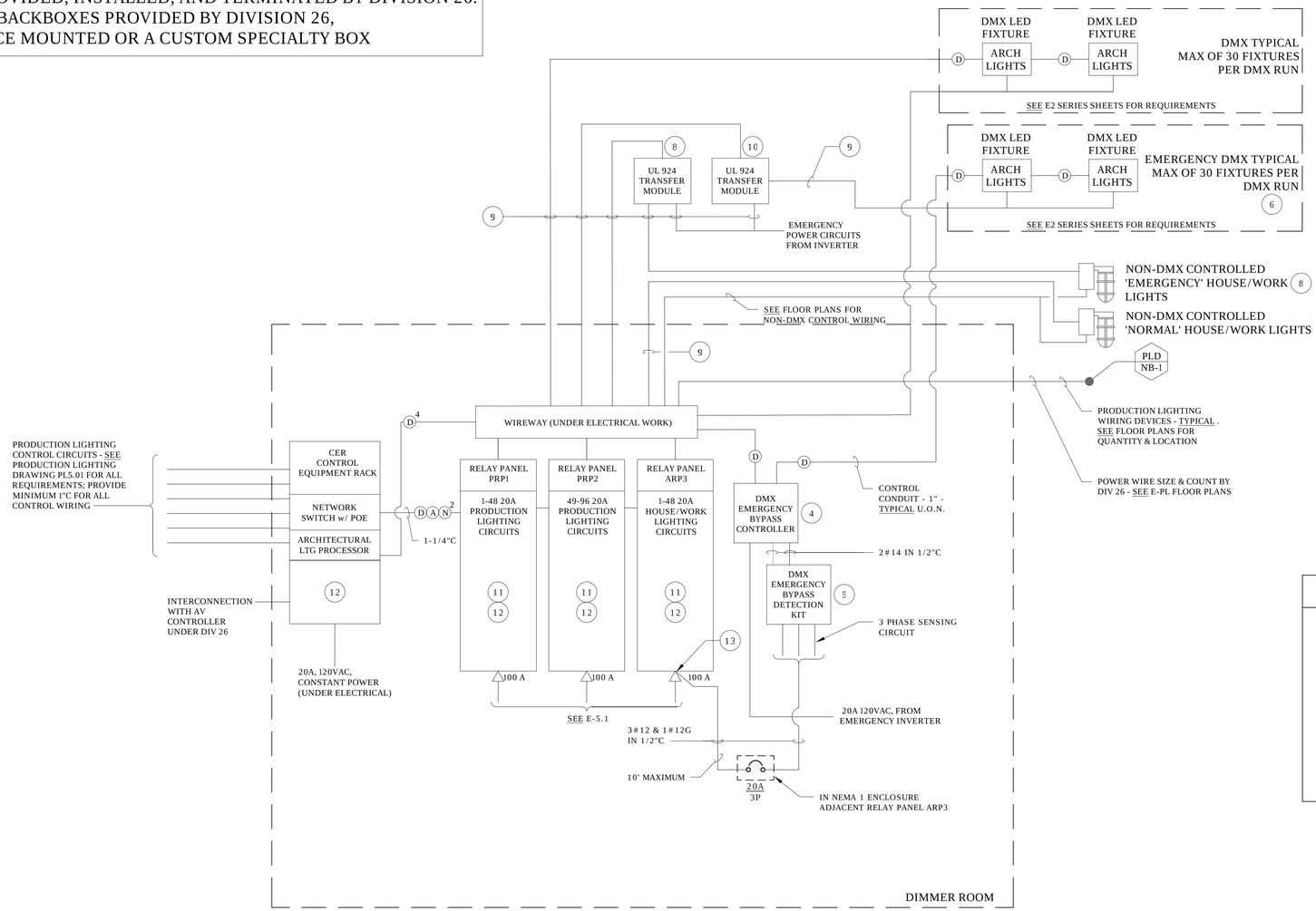

NUM. SHEET NOTES

1. COMMON HOMERUN CONDUIT.
2. ALL WIRING IN CONDUIT - 1" MINIMUM.
3. 1"C W/CABLES PLUS 1"C SPARE.
4. SIX OUTPUT CONTROLLER ETC DEBC-6.
5. DRY CONTACT CLOSURE (UPON LOSS OF NORMAL POWER).
6. TYPICAL FOR DMX CONTROLLED NORMAL/ EMERGENCY FIXTURES - MAXIMUM OF 30 FIXTURES ON EACH DEBC OUTPUT; UP TO 6 OUTPUTS AVAILABLE.
7. REFER TO ELECTRICAL FLOOR PLANS FOR POWER, QUANTITY, AND LOCATION INFORMATION; MAXIMUM OF 30 FIXTURES ON EACH DMX RUN; PROVIDE QUANTITY OF RUNS NEEDED.
8. TYPICAL FOR EACH NON-DMX CONTROLLED EMERGENCY ZONE.
9. POWER WIRING - SEE LIGHTING FLOOR PLANS FOR REQUIREMENTS.
10. TYPICAL FOR EACH RELAY ZONE OF DMX CONTROLLED NORMAL/EMERGENCY FIXTURES.
11. WITH INTEGRAL MAIN BREAKER.
12. PROVIDED BY DIV. 11 - INSTALL & CONNECT COMPLETE.
13. CONNECT 3-PHASE SENSING CIRCUIT TO INCOMING LUGS OF RELAY PANEL ARP3.

WIRING KEY

- (D) DMX CONTROL - (1) BELDEN 9729
- (A) ARCH LTG CONTROL - (1) BELDEN 8471 & (3) #14 AWG
- (N) ETHERNET - CAT6 (1) BELDEN 2412

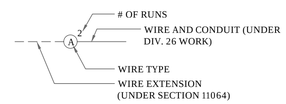

PRODUCTION LIGHTING SINGLE LINE DIAGRAM - ELECTRICAL
SCALE NONE

1 E-5.01

QUATTROCCHI KWOK ARCHITECTS
Main Office:
636 Fifth Street, Santa Rosa, CA 95404
Pleasanton Office:
600 Main Street, Suite E,
Pleasanton, CA 94566
(707) 576-0829

O'MAHONY & MYER
ELECTRICAL ENGINEERING and LIGHTING DESIGN
4340 REDWOOD HWY., SUITE 245
SAN RAFAEL, CALIFORNIA 94903
(415) 492-0420/FAX (415) 479-9602
www.ommconsulting.com

PAUL J. COLEMAN No. 14738 Exp. 6/21 REGISTERED PROFESSIONAL ENGINEER ELECTRICAL STATE OF CALIFORNIA

FREEDOM HIGH SCHOOL

PERFORMING ARTS AND CTE FACILITIES

1050 NEROLY RD
OAKLEY, CA 94561

LIBERTY UNION HIGH SCHOOL DISTRICT

1	DSA	2019

ARCH PROJECT NO: 1739.00
DRAWN BY: TV/LN/ME
DRAWING SCALE:
PTN: 61721-0068

BID SET

JUNE 28, 2019

SHEET TITLE
PRODUCTION LIGHTING SINGLE LINE DIAGRAM - ELECTRICAL

SHEET NUMBER
E-PL-5.01

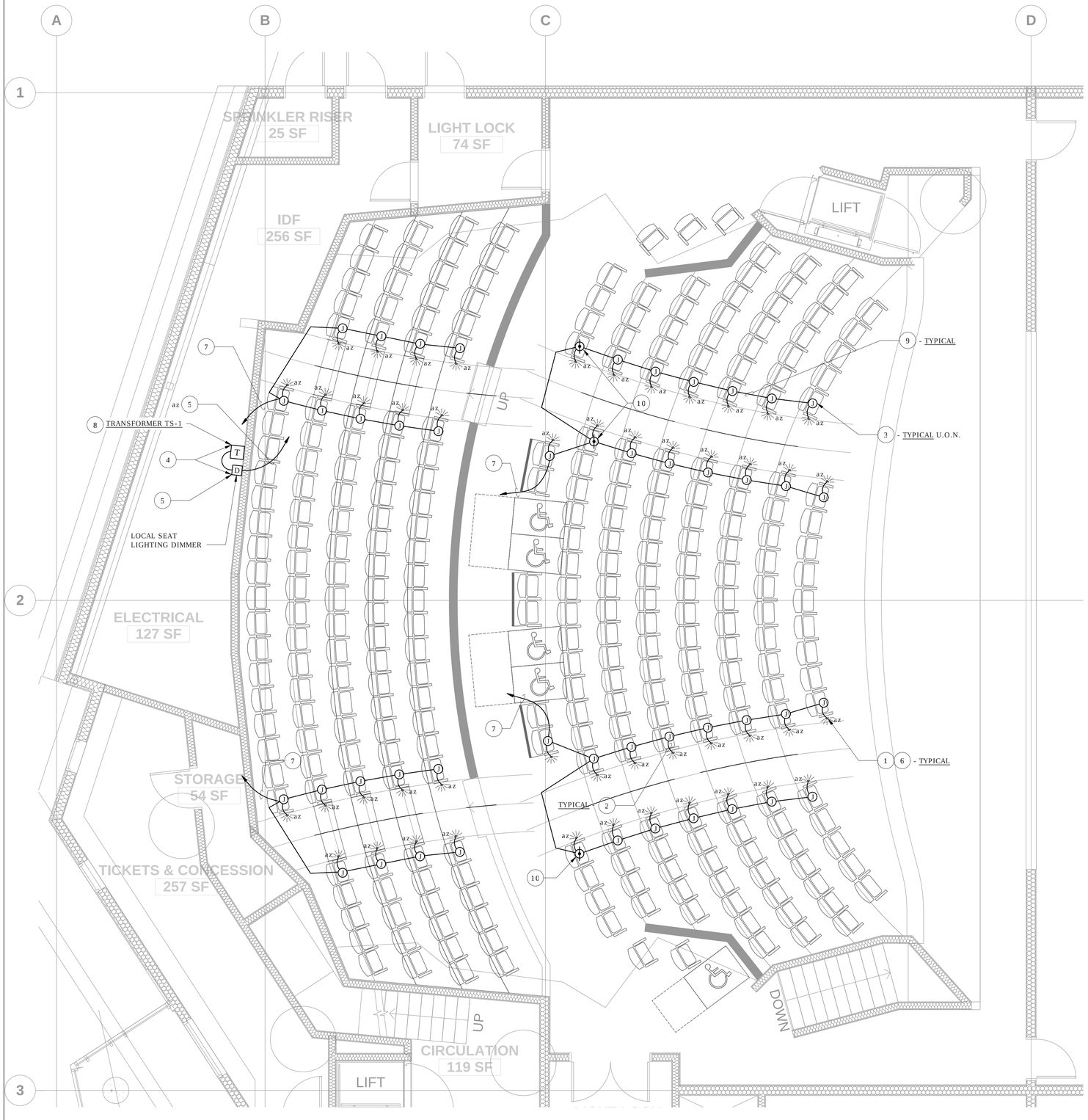

SEATING PLAN AT MAIN LEVEL

SCALE 1/4" = 1' - 0"

NUMBERED SHEET NOTES

1. SEAT-MOUNTED AISLE LIGHT (N.I.E.C.). VERIFY ALL REQUIREMENTS PRIOR TO ROUGH-IN.
2. (2)#22 IN 3/8"C. WHIP (SUPPLIED WITH SEAT LIGHT) - CONNECT COMPLETE TO 12V D.C. BRANCH CIRCUIT WIRING AT J-BOX; ROUTE BEHIND REAR SET LEGS TO J-BOX. PAINT BLACK.
3. FLUSH-FLOOR OR RISER-MOUNTED JUNCTION BOX FOR CONNECTION OF SEAT MOUNTED AISLE LIGHTING - SEE PS3.01.
4. PROVIDE ENGRAVED NAMEPLATE: "SEAT LIGHTING".
5. ROUTE HOMERUN FOR AISLE LIGHTING TO RELAY PANEL 'ARP3' - SEE E-3.3 FOR LOCATION. PROVIDE AND INSTALL (2)#10 & (1)#10 G IN 3/4" CONDUIT. THE SEAT LIGHTING WILL BE SWITCHED FROM PNL ARP3 & DIMMED VIA LOCAL DIMMER PROVIDED & SET BY SEAT VENDOR. INSTALLED BY THIS CONTRACTOR.
6. ALL SEAT LIGHTS WILL BE PROVIDED BY THE SEAT VENDOR. COORDINATE WITH SEAT VENDOR FOR ALL WORK REQUIRED BY DIVISION 26 FOR THE INSTALLATION AND CONNECTION OF THE SEAT LIGHTS - PROVIDE AND INSTALL ALL MATERIALS AND CONNECTIONS REQUIRED.
7. HOMERUN MAXIMUM (14) FIXTURES T-TAPPED AS SHOWN IN 1/2" CONDUIT TO 120V/12V TRANSFORMER TS-1; (DO NOT DAISY CHAIN). CONNECT COMPLETE TO TIVOLI TRANSFORMER #JT-240-4-5-12D. TRANSFORMER TO HAVE (4) 5 AMP SECONDARY BREAKERS. CONTRACTOR TO TAKE VOLTAGE READINGS TO VERIFY VOLTAGE IS BETWEEN 10.8 VOLTS AND 12 VOLTS AT FEED POINT UNDER LOAD. RUNS SHALL NOT EXCEED 105 FEET WITH #12 GAUGE WIRE.
8. TRANSFORMER TO BE WALL-MOUNTED.
9. (2)#12 IN 1/2" CONDUIT THROUGHOUT 12V D.C. CIRCUITING.
10. FLUSH FLOOR-MOUNTED BOX (HUBBLE F3185) FOR LIGHT AT DEMOUNTABLE SEAT LOCATION (VERIFY LOCATIONS) WITH TWISTLOCK NEMA ML1-15 RECEPTACLE & SCREW-OFF CAPS AND METAL JACKETED CORD - SEE PS-301 FOR ADDITIONAL DETAILS AND ACCEPTABLE LOCATIONS.

QUATTROCCHI KWOK
ARCHITECTS
Main Office:
636 Fifth Street, Santa Rosa, CA 95404
Pleasanton Office:
600 Main Street, Suite E,
Pleasanton, CA 94566
(707) 576-0829

O'MAHONY & MYER
ELECTRICAL ENGINEERING and LIGHTING DESIGN
4340 REDWOOD HWY., SUITE 245
SAN RAFAEL, CALIFORNIA 94903
(415) 492-0420/FAX (415) 479-9662
www.ommconsulting.com

REGISTERED PROFESSIONAL ENGINEER
PAUL J. COLEMAN
No. 14738
Exp. 6/21
ELECTRICAL
STATE OF CALIFORNIA

FREEDOM HIGH SCHOOL

PERFORMING ARTS AND CTE FACILITIES

1050 NEROLY RD
OAKLEY, CA 94561

LIBERTY UNION HIGH SCHOOL DISTRICT

1	DSA	2019

ARCH PROJECT NO: 1739.00
DRAWN BY: TV/LN/ME
DRAWING SCALE:
PTN: 61721-0068

BID SET

JUNE 28, 2019

SHEET TITLE

PRODUCTION SEATING PLAN AT LEVEL 1 - ELECTRICAL

SHEET NUMBER

E-PS-1.01

FREEDOM HS PERFORMING ARTS CENTER AND CTE – 218054

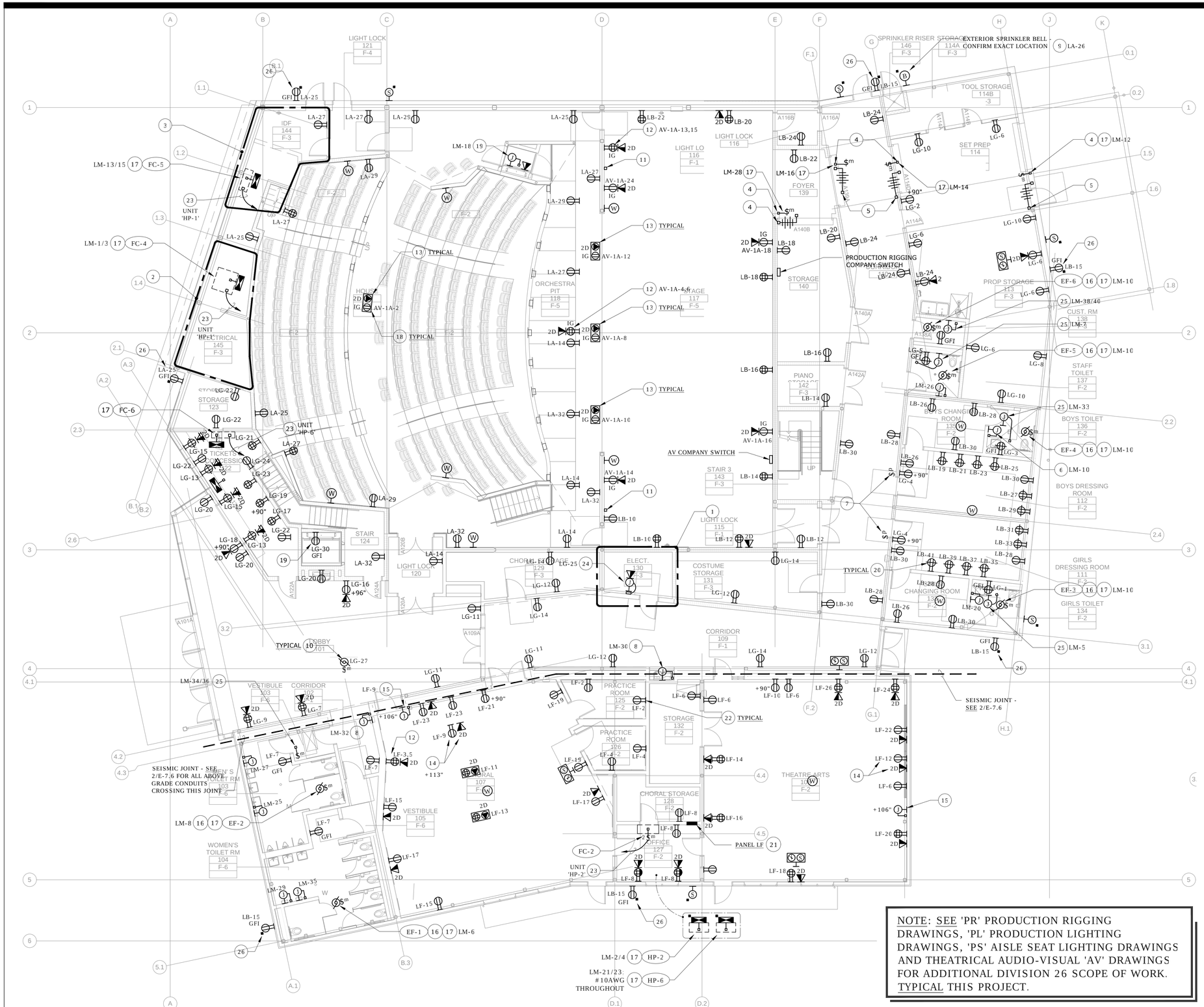

NOTE: SEE 'PR' PRODUCTION RIGGING DRAWINGS, 'PL' PRODUCTION LIGHTING DRAWINGS, 'PS' AISLE SEAT LIGHTING DRAWINGS AND THEATRICAL AUDIO-VISUAL 'AV' DRAWINGS FOR ADDITIONAL DIVISION 26 SCOPE OF WORK. TYPICAL THIS PROJECT.

BUILDING A - 1ST FLOOR PLAN - POWER & SIGNAL - PAC

SCALE 1/8" = 1' - 0"

1 E-A3.1

NUMBERED SHEET NOTES

1. SEE 1/E-4.01 FOR ELECTRICAL EQUIPMENT LAYOUT THIS AREA.
2. SEE 2/E-4.01 FOR ELECTRICAL EQUIPMENT LAYOUT THIS AREA.
3. SEE 3/E-4.01 FOR TELECOM/FIRE ALARM EQUIPMENT LAYOUT THIS AREA.
4. OVERHEAD COILING DOOR.
5. DOOR CONTROLS - VERIFY ALL REQUIREMENTS AND CONNECT COMPLETE.
6. ELECTRIC HAND-DRYER - TYPICAL.
7. DRESSING ROOM CONTROL STATION - SEE 1/E-7.6.
8. ELECTRIC WATER COOLER.
9. CONNECT 120V CIRCUIT FOR BELL VIA FLOW SWITCH AUXILIARY CONTACT IN SPRINKLER RISER ROOM - SEE FE SERIES DRAWINGS FOR LOCATION.
10. MOTORIZED SHADE CONNECTION AT CLERESTORY TYPICAL FOR EACH WINDOW - SEE MANUFACTURER'S SHOP DRAWINGS FOR EXACT POWER & CONTROL CONNECTIONS FOR SHADE SYSTEM.
11. SMOKE HATCH RELEASE STATION - SEE 2/E-7.6. PROVIDE ENGRAVED RED NAMEPLATE "SMOKE HATCH RELEASE".
12. (2) DEDICATED CIRCUITS; ONE FOR EACH DUPLEX.
13. FOR FLOOR BOX REQUIREMENTS SEE AV DRAWINGS.
14. PROVIDE AND INSTALL POWER AND DATA RECEPTACLES AT SHORT THROW PROJECTOR ASSEMBLY PER AV DRAWINGS. COORDINATE ROUGH-IN REQUIREMENTS PRIOR TO ROUGH-IN.
15. PROVIDE AND INSTALL ALL RACEWAY FOR PROJECTION SCREEN AND CONTROLS PER AV DRAWINGS.
16. ROUTE HOMERUN VIA DIV 23 CONTROLS.
17. SEE E-4.1 FOR LOCATION OF PANELS.
18. PROVIDE ISOLATED GROUND WIRE IN ADDITION TO STANDARD GROUND WIRE IN ALL BRANCH CIRCUITS TO 'IG' OUTLETS.
19. ELEVATOR PIT RECEPTACLE - SEE 3/E-5.3 FOR ELEVATOR REQUIREMENTS. ALSO SEE 1/E-A2.1 FOR ELEVATOR PIT LIGHTING AND CONTROLS.
20. ROUTE DRESSING STATION OUTLET HOMERUN VIA DRESSING STATION CONTROLS - SEE 1/E-7.6 - TYPICAL.
21. STUB-UP 4-3/4"C INTO ACCESSIBLE CEILING FOR FUTURE CONNECTIONS.
22. MOUNT BOXES ON PRACTICE ROOM WALLS WITH ACOUSTICAL PADS TO MAINTAIN SOUND ISOLATION - SEE AV CONSULTANT.
23. PROVIDE AND INSTALL 1/2"C. WITH (2) #12 + (1) #12G. FOR CONTROL POWER TO HEAT PUMP UNIT INDICATED. VERIFY EXACT REQUIREMENTS AND LOCATION WITH THE MECHANICAL PLANS PRIOR TO ROUGH-IN.
24. DIVISION 23 GATEWAY; PROVIDE POWER & DATA CONNECTION.
25. ELECTRIC WATER HEATER - CONNECT COMPLETE; #10AWG THROUGHOUT CIRCUIT.
26. PROVIDE FLUSH IN-WALL WEATHER-PROOF COVER PLATE WITH LOCKING LID. PASS AND SEYMOUR #4600 SERIES. REQUIRES SPECIAL ROUGH-IN.

A/V SYSTEM NOTES

1. SEE THE A/V CONSULTANT'S DRAWINGS AND SPECIFICATIONS FOR ALL A/V EQUIPMENT, PANEL, AND DEVICE LOCATIONS AND REQUIREMENTS.
2. THE A/V CONTRACTOR (DIVISION 11) WILL PROVIDE AND INSTALL ALL A/V EQUIPMENT, RACKS, DEVICES, PANELS AND A/V SYSTEMS WIRING.
3. DIVISION 26 SHALL PROVIDE ALL BACKBOXES, CONDUITS AND RACEWAYS REQUIRED FOR THE A/V SYSTEM IN COORDINATION WITH THE A/V DRAWINGS.
4. MAINTAIN ALL SEPARATIONS BETWEEN A/V SYSTEM CONDUITS, AND BETWEEN A/V SYSTEM AND POWER CONDUITS AS STIPULATED BY THE "CONDUIT SEPARATION TABLES" IN SPECIFICATION SECTION 26 05 83.
5. SEE E-PL SERIES GENERAL NOTES FOR ADDITIONAL REQUIREMENTS.

GENERAL NOTES

A. DEDICATED NEUTRALS REQUIRED FOR ALL BRANCH CIRCUITS.

B. ELECTRICAL DEVICES ON FIRE-RATED WALLS TO BE INSTALLED 24" APART MINIMUM.

C. PROVIDE ISOLATED GROUND IN ADDITION TO STANDARD GROUND CONDUCTOR IN ALL CIRCUITING TO I.G RECEPTACLES.

QUATTROCCHI KWOK ARCHITECTS
Main Office:
636 Fifth Street, Santa Rosa, CA 95404
Pleasanton Office:
600 Main Street, Suite E,
Pleasanton, CA 94566
(707) 576-0829

O'MAHONY & MYER
ELECTRICAL ENGINEERING and LIGHTING DESIGN
4340 REDWOOD HWY., SUITE 245
SAN RAFAEL, CALIFORNIA 94903
(415) 492-0420/FAX (415) 479-9662
www.ommconsulting.com

PAUL J. COLEMAN No. 14738 Exp. 6/21 ELECTRICAL STATE OF CALIFORNIA REGISTERED PROFESSIONAL ENGINEER

FREEDOM HIGH SCHOOL

PERFORMING ARTS AND CTE FACILITIES

1050 NEROLY RD
OAKLEY, CA 94561

LIBERTY UNION HIGH SCHOOL DISTRICT

	DSA	2019

ARCH PROJECT NO: 1739.00
DRAWN BY: TV/LN/ME
DRAWING SCALE:
PTN: 61721-0068

BID SET

JUNE 28, 2019

SHEET TITLE

BUILDING A - FIRST FLOOR PLAN - POWER & SIGNAL - PAC

SHEET NUMBER

E-A3.1

FREEDOM HS PERFORMING ARTS CENTER AND CTE - 218054

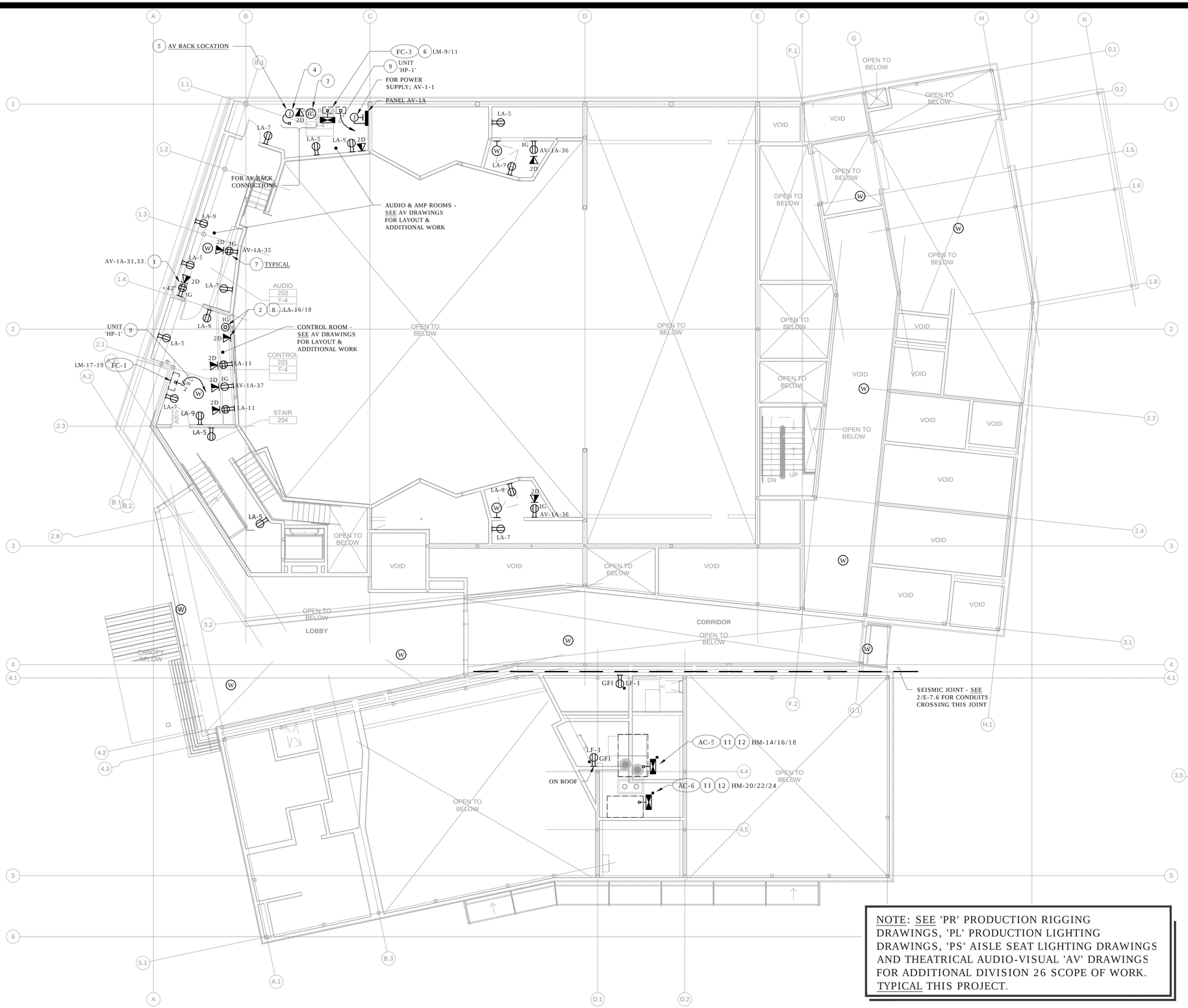

NOTE: SEE 'PR' PRODUCTION RIGGING DRAWINGS, 'PL' PRODUCTION LIGHTING DRAWINGS, 'PS' AISLE SEAT LIGHTING DRAWINGS AND THEATRICAL AUDIO-VISUAL 'AV' DRAWINGS FOR ADDITIONAL DIVISION 26 SCOPE OF WORK. TYPICAL THIS PROJECT.

BUILDING A - CONTROL BOOTH LEVEL PLAN - POWER & SIGNAL - PAC

SCALE 1/8" = 1' - 0"

1 / E-A3.1

NUMBERED SHEET NOTES

1. (2) DEDICATED CIRCUITS; ONE FOR EACH DUPLEX.
2. PROVIDE 30A 250V 3PG NEMA L6-30R AND DATA OUTLET AT +93" FOR PROJECTOR.
3. ISOLATED GROUND CONNECTION TO AV RACK - SEE E-5.1.
4. PROVIDE (6) 20A 1P 120V ISOLATED GROUND CIRCUITS FOR AV RACK (AV-1A - 1,3,5,7,9,11) - CONNECT CONDUIT TO RACK WITH NON-CONDUCTIVE TERMINATION; #10AWG THROUGHOUT.
5. SEE SHEET AV-4.01 FOR CABLE TRAY REQUIREMENTS FOR LOW VOLTAGE AV CABLES ORIGINATING AT RACK.
6. SEE E-4.1 FOR LOCATION OF PANELS.
7. PROVIDE ISOLATED GROUND WIRE IN ADDITION TO STANDARD GROUND WIRE IN ALL BRANCH CIRCUITS TO 'IG' OUTLETS.
8. #10 AWG CONDUCTORS THROUGHOUT CIRCUIT.
9. PROVIDE AND INSTALL 1/2"C. WITH (2) #12 + (1) #12G. FOR CONTROL POWER TO HEAT PUMP UNIT INDICATED. VERIFY EXACT REQUIREMENTS AND LOCATION WITH THE MECHANICAL PLANS PRIOR TO ROUGH-IN.
10. 3#12 & 1#12G IN 1/2"C THROUGHOUT CIRCUIT.
11. 3#10 & 1#12G IN 3/4"C THROUGHOUT CIRCUIT.
12. SEE E-4.1 FOR LOCATION OF PANELS.

A/V SYSTEM NOTES

1. SEE THE A/V CONSULTANT'S DRAWINGS AND SPECIFICATIONS FOR ALL A/V EQUIPMENT, PANEL, AND DEVICE LOCATIONS AND REQUIREMENTS.
2. THE A/V CONTRACTOR (DIVISION 11) WILL PROVIDE AND INSTALL ALL A/V EQUIPMENT, RACKS, DEVICES, PANELS AND A/V SYSTEMS WIRING.
3. DIVISION 26 SHALL PROVIDE ALL BACKBOXES, CONDUITS AND RACEWAYS REQUIRED FOR THE A/V SYSTEM IN COORDINATION WITH THE A/V DRAWINGS.
4. MAINTAIN ALL SEPARATIONS BETWEEN A/V SYSTEM CONDUITS, AND BETWEEN A/V SYSTEM AND POWER CONDUITS AS STIPULATED BY THE "CONDUIT SEPARATION TABLES" IN SPECIFICATION SECTION 26 05 83.
5. SEE E-PL SERIES GENERAL NOTES FOR ADDITIONAL REQUIREMENTS.

GENERAL NOTES

A. DEDICATED NEUTRALS REQUIRED FOR ALL BRANCH CIRCUITS.

B. ELECTRICAL DEVICES ON FIRE-RATED WALLS TO BE INSTALLED 24" APART MINIMUM.

C. PROVIDE ISOLATED GROUND IN ADDITION TO STANDARD GROUND CONDUCTOR IN ALL CIRCUITING TO I.G RECEPTACLES.

QUATTROCCHI KWOK ARCHITECTS
Main Office:
636 Fifth Street, Santa Rosa, CA 95404
Pleasanton Office:
600 Main Street, Suite E,
Pleasanton, CA 94566
(707) 576-0829

O'MAHONY & MYER
ELECTRICAL ENGINEERING and LIGHTING DESIGN
4340 REDWOOD HWY., SUITE 245
SAN RAFAEL, CALIFORNIA 94903
(415) 492-0420/FAX (415) 479-9602
www.ommconsulting.com

PAUL J. COLEMAN No.14738 Exp. 6/21 REGISTERED PROFESSIONAL ENGINEER ELECTRICAL STATE OF CALIFORNIA

FREEDOM HIGH SCHOOL

PERFORMING ARTS AND CTE FACILITIES

1050 NEROLY RD
OAKLEY, CA 94561

LIBERTY UNION HIGH SCHOOL DISTRICT

	DSA	2019

ARCH PROJECT NO: 1739.00
DRAWN BY: TV/LN/ME
DRAWING SCALE:
PTN: 61721-0068

BID SET

JUNE 28, 2019

SHEET TITLE
BUILDING A - CONTROL BOOTH LEVEL PLAN - POWER & SIGNAL - PAC

SHEET NUMBER
E-A3.2

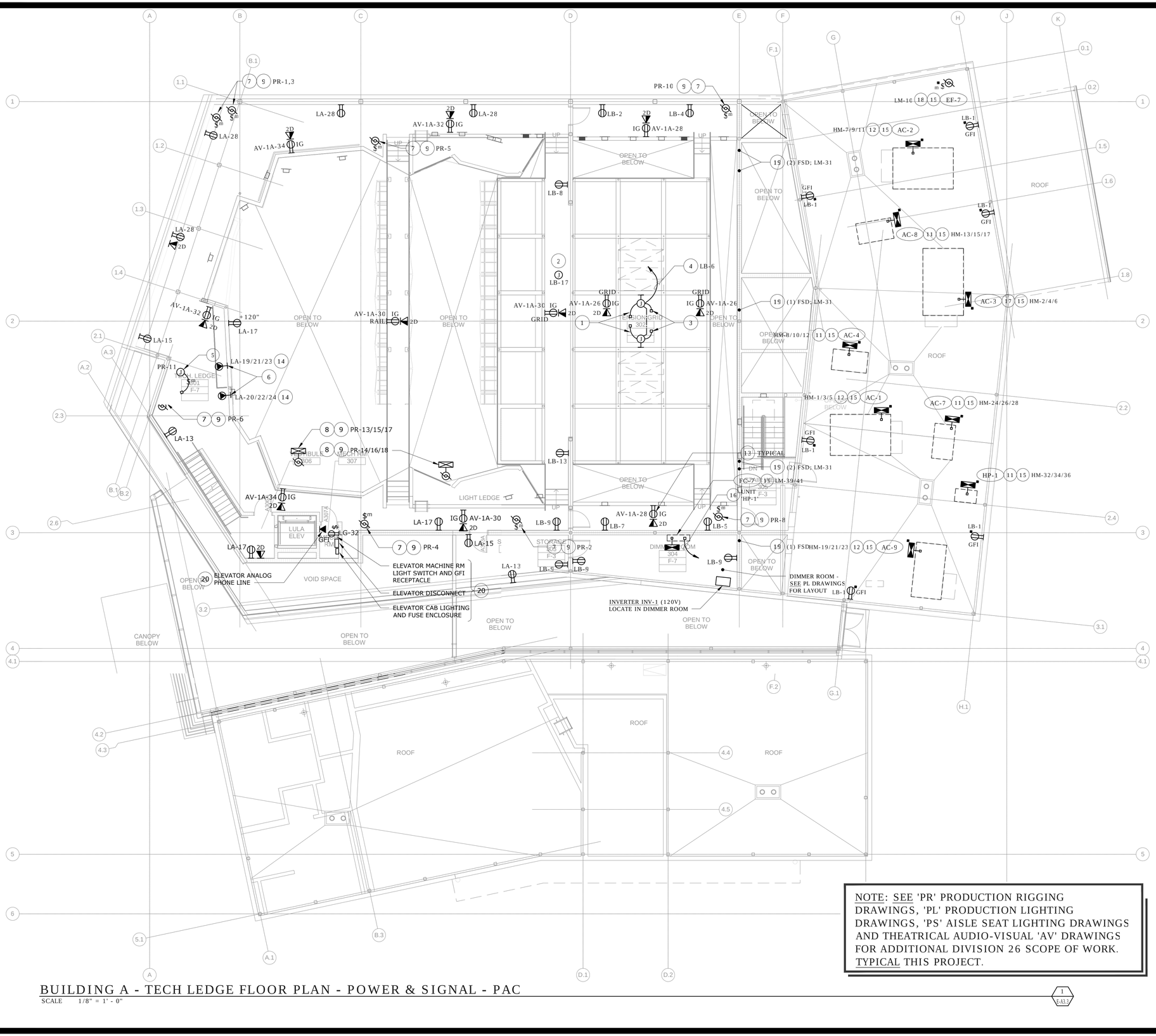

NOTE: SEE 'PR' PRODUCTION RIGGING DRAWINGS, 'PL' PRODUCTION LIGHTING DRAWINGS, 'PS' AISLE SEAT LIGHTING DRAWINGS AND THEATRICAL AUDIO-VISUAL 'AV' DRAWINGS FOR ADDITIONAL DIVISION 26 SCOPE OF WORK. TYPICAL THIS PROJECT.

BUILDING A - TECH LEDGE FLOOR PLAN - POWER & SIGNAL - PAC

SCALE 1/8" = 1' - 0"

1 / E-A3.3

NUMBERED SHEET NOTES

1. EMERGENCY SMOKE RELEASE HATCHES AT ROOF ABOVE.
2. PROVIDE AND INSTALL POWER CONNECTION FOR MOTORIZED PROJECTION SCREEN. COORDINATE EXACT LOCATION AND ROUTING OF POWER THROUGH CONTROL SWITCH AT STAGE BELOW WITH AV SYSTEM INSTALLER.
3. SMOKE HATCH 120V THERMOLATCH ELECTRIC RELEASE.
4. (2)#12 & (1)#12 IN 3/4"C TO SMOKE HATCH RELEASE STATIONS AT STAGE BELOW - SEE E-A3.1 & 2/E-7.6.
5. MOTORIZED CURTAIN - CONFIRM ALL POWER & CONTROL REQUIREMENTS AND CONNECT COMPLETE.
6. FOLLOWSPOT RECEPTACLE: 20A 125/250V 4PG 3PH NEMA L21-20R TWISTLOCK RECEPTACLE.
7. DRAPERY MOTOR; 1/2HP 120V - TYPICAL.
8. BATTEN HOIST MOTOR; 1.5HP 208V 3PH.
9. SEE PR DRAWING RISERS FOR ALL POWER AND CONTROL CONNECTIONS FOR PRODUCTION RIGGING SYSTEM.
10. 3#12 & 1#12G IN 1/2"C THROUGHOUT CIRCUIT.
11. 3#10 & 1#12G IN 3/4"C THROUGHOUT CIRCUIT.
12. 3#8 & 1#10G IN 1"C THROUGHOUT CIRCUIT.
13. PROVIDE ISOLATED GROUND WIRE IN ADDITION TO STANDARD GROUND WIRE IN ALL BRANCH CIRCUITS TO 'IG' OUTLETS.
14. 4#12 & 1#12G IN 3/4"C THROUGHOUT CIRCUIT.
15. SEE E-4.1 FOR LOCATION OF PANELS.
16. PROVIDE AND INSTALL 1/2"C. WITH (2) #12 + (1) #12G. FOR CONTROL POWER TO HEAT PUMP UNIT INDICATED. VERIFY EXACT REQUIREMENTS AND LOCATION WITH THE MECHANICAL PLANS PRIOR TO ROUGH-IN.
17. 3#6 & 1#10G IN 1"C THROUGHOUT CIRCUIT.
18. ROUTE HOMERUN VIA DIV 23 CONTROLS.
19. PROVIDE AND INSTALL 120V CONNECTIONS TO FSD UNIT. REFER TO MECHANICAL PLANS FOR EXACT LOCATION OF EQUIPMENT. SEE FIRE ALARM DRAWINGS FOR MONITOR MODULE CONNECTIONS.
20. COORDINATE ALL ELEVATOR EQUIPMENT LOCATIONS AND REQUIREMENTS WITH ELEVATOR EQUIPMENT VENDOR PRIOR TO ROUGH-IN - SEE DETAIL 3/E-5.3.

A/V SYSTEM NOTES

1. SEE THE A/V CONSULTANT'S DRAWINGS AND SPECIFICATIONS FOR ALL A/V EQUIPMENT, PANEL, AND DEVICE LOCATIONS AND REQUIREMENTS.
2. THE A/V CONTRACTOR (DIVISION 11) WILL PROVIDE AND INSTALL ALL A/V EQUIPMENT, RACKS, DEVICES, PANELS AND A/V SYSTEMS WIRING.
3. DIVISION 26 SHALL PROVIDE ALL BACKBOXES, CONDUITS AND RACEWAYS REQUIRED FOR THE A/V SYSTEM IN COORDINATION WITH THE A/V DRAWINGS.
4. MAINTAIN ALL SEPARATIONS BETWEEN A/V SYSTEM CONDUITS, AND BETWEEN A/V SYSTEM AND POWER CONDUITS AS STIPULATED BY THE "CONDUIT SEPARATION TABLES" IN SPECIFICATION SECTION 26 05 83.
5. SEE E-PL SERIES GENERAL NOTES FOR ADDITIONAL REQUIREMENTS.

GENERAL NOTES

A. DEDICATED NEUTRALS REQUIRED FOR ALL BRANCH CIRCUITS.

B. ELECTRICAL DEVICES ON FIRE-RATED WALLS TO BE INSTALLED 24" APART MINIMUM.

C. PROVIDE ISOLATED GROUND IN ADDITION TO STANDARD GROUND CONDUCTOR IN ALL CIRCUITING TO I.G RECEPTACLES.

QUATTROCCHI KWOK ARCHITECTS
Main Office:
636 Fifth Street, Santa Rosa, CA 95404
Pleasanton Office:
600 Main Street, Suite E,
Pleasanton, CA 94566
(707) 576-0829

O'MAHONY & MYER
ELECTRICAL ENGINEERING and LIGHTING DESIGN
4340 REDWOOD HWY., SUITE 245
SAN RAFAEL, CALIFORNIA 94903
(415) 492-0420/FAX (415) 479-9602
www.ommconsulting.com

REGISTERED PROFESSIONAL ENGINEER PAUL J. COLEMAN No.14738 Exp. 6/21 ELECTRICAL STATE OF CALIFORNIA

FREEDOM HIGH SCHOOL

PERFORMING ARTS AND CTE FACILITIES

1050 NEROLY RD
OAKLEY, CA 94561

LIBERTY UNION HIGH SCHOOL DISTRICT

	DSA	2019

ARCH PROJECT NO: 1739.00
DRAWN BY: TV/LN/ME
DRAWING SCALE:
PTN: 61721-0068

BID SET

JUNE 28, 2019

SHEET TITLE

BUILDING A - TECH LEDGE FLOOR PLAN - POWER & SIGNAL - PAC

SHEET NUMBER

E-A3.3

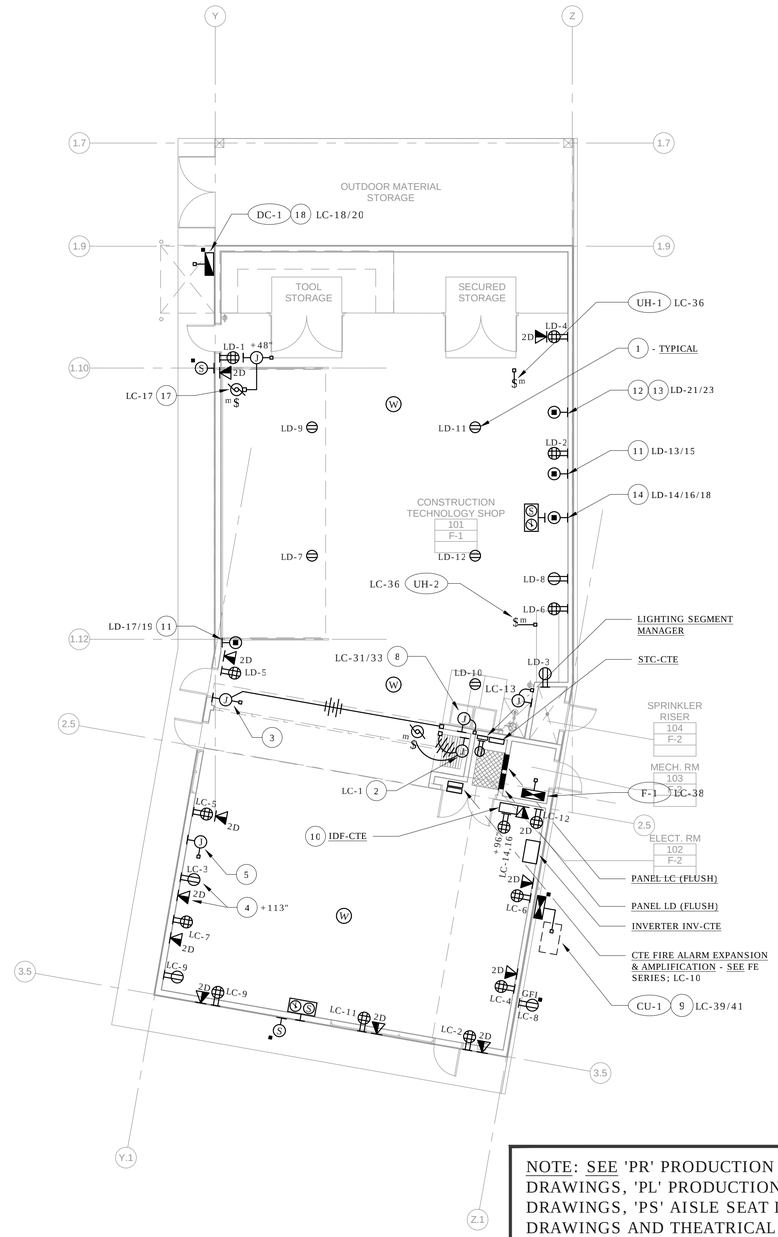

NOTE: SEE 'PR' PRODUCTION RIGGING DRAWINGS, 'PL' PRODUCTION LIGHTING DRAWINGS, 'PS' AISLE SEAT LIGHTING DRAWINGS AND THEATRICAL AUDIO-VISUAL 'AV' DRAWINGS FOR ADDITIONAL DIVISION 26 SCOPE OF WORK. TYPICAL THIS PROJECT.

BUILDING B - 1ST FLOOR PLAN - POWER & SIGNAL - CTE

SCALE 1/8" = 1' - 0"

1 / E-B3.1

NUMBERED SHEET NOTES

1. OVERHEAD CORD REEL OUTLET - SEE 3/E-7.6.
2. MOTORIZED PARTITION DOOR CONNECTIONS - VERIFY LOCATION AND REQUIREMENTS FOR POWER & CONTROL CONNECTION POINTS WITH MANUFACTURER'S SHOP DRAWINGS AND CONNECT COMPLETE.
3. PARTITION DOOR CONTROL STATION - VERIFY LOCATIONS AND CONNECTION REQUIREMENTS.
4. IN CEILING.
5. PROVIDE AND INSTALL ALL RACEWAY FOR PROJECTION SCREEN AND CONTROLS PER AV DRAWINGS.
6. NOT USED.
7. PROVIDE ISOLATED GROUND WIRE IN ADDITION TO STANDARD GROUND WIRE IN ALL BRANCH CIRCUITS TO 'IG' OUTLETS.
8. ELECTRIC WATER HEATER - CONNECT COMPLETE; #10AWG THROUGHOUT CIRCUIT.
9. 2#8 & 1#10G IN 3/4"C THROUGHOUT CIRCUIT.
10. DEDICATED CIRCUIT FOR EACH DUPLEX IN QUAD.
11. NEMA L6-20R 250V 3PG SINGLE PHASE TWISTLOCK RECEPTACLE UP 18" U.O.N.
12. NEMA L6-30R 250V 3PG SINGLE PHASE TWISTLOCK RECEPTACLE UP 18" U.O.N.
13. #10AWG THROUGHOUT CIRCUIT.
14. NEMA L21-20R 125/250V 4PG THREE PHASE TWISTLOCK RECEPTACLE UP 18" U.O.N.; 4#12 & 1#12G IN 3/4"C THROUGHOUT CIRCUIT.
15. PROVIDE FLUSH IN-WALL WEATHER-PROOF COVER PLATE WITH LOCKING LID. PASS AND SEYMOUR #4600 SERIES. REQUIRES SPECIAL ROUGH-IN.
16. PROVIDE AND INSTALL POWER CONNECTION TO OVERHEAD COILING DOOR. CONNECT COMPLETE.
17. PROVIDE AND INSTALL ALL RACEWAY AND CABLING FOR COILING DOOR CONTROLS - VERIFY ALL REQUIREMENTS AND CONNECT COMPLETE.
18. 2#10 & 1#10G. IN 3/4" C THROUGHOUT CIRCUIT.

A/V SYSTEM NOTES

1. SEE THE A/V CONSULTANT'S DRAWINGS AND SPECIFICATIONS FOR ALL A/V EQUIPMENT, PANEL, AND DEVICE LOCATIONS AND REQUIREMENTS.
2. THE A/V CONTRACTOR (DIVISION 11) WILL PROVIDE AND INSTALL ALL A/V EQUIPMENT, RACKS, DEVICES, PANELS AND A/V SYSTEMS WIRING.
3. DIVISION 26 SHALL PROVIDE ALL BACKBOXES, CONDUITS AND RACEWAYS REQUIRED FOR THE A/V SYSTEM IN COORDINATION WITH THE A/V DRAWINGS.
4. MAINTAIN ALL SEPARATIONS BETWEEN A/V SYSTEM CONDUITS, AND BETWEEN A/V SYSTEM AND POWER CONDUITS AS STIPULATED BY THE "CONDUIT SEPARATION TABLES" IN SPECIFICATION SECTION 26 05 83.
5. SEE E-PL SERIES GENERAL NOTES FOR ADDITIONAL REQUIREMENTS.

GENERAL NOTES

A. DEDICATED NEUTRALS REQUIRED FOR ALL BRANCH CIRCUITS.

B. ELECTRICAL DEVICES ON FIRE-RATED WALLS TO BE INSTALLED 24" APART MINIMUM.

C. PROVIDE ISOLATED GROUND IN ADDITION TO STANDARD GROUND CONDUCTOR IN ALL CIRCUITING TO I.G RECEPTACLES.

QUATTROCCHI KWOK ARCHITECTS
Main Office:
636 Fifth Street, Santa Rosa, CA 95404
Pleasanton Office:
600 Main Street, Suite E,
Pleasanton, CA 94566
(707) 576-0829

O'MAHONY & MYER
ELECTRICAL ENGINEERING and LIGHTING DESIGN
4340 REDWOOD HWY., SUITE 245
SAN RAFAEL, CALIFORNIA 94903
(415) 492-0420/FAX (415) 479-9602
www.ommconsulting.com

PAUL J. COLEMAN No. 14738 Exp. 6/21 REGISTERED PROFESSIONAL ENGINEER ELECTRICAL STATE OF CALIFORNIA

FREEDOM HIGH SCHOOL

PERFORMING ARTS AND CTE FACILITIES

1050 NEROLY RD
OAKLEY, CA 94561

LIBERTY UNION HIGH SCHOOL DISTRICT

	DSA	2019

ARCH PROJECT NO: 1739.00
DRAWN BY: TV/LN/ME
DRAWING SCALE:
PTN: 61721-0068

BID SET

JUNE 28, 2019

SHEET TITLE
BUILDING B - FIRST FLOOR PLAN - POWER & SIGNAL - CTE

SHEET NUMBER
E-B3.1

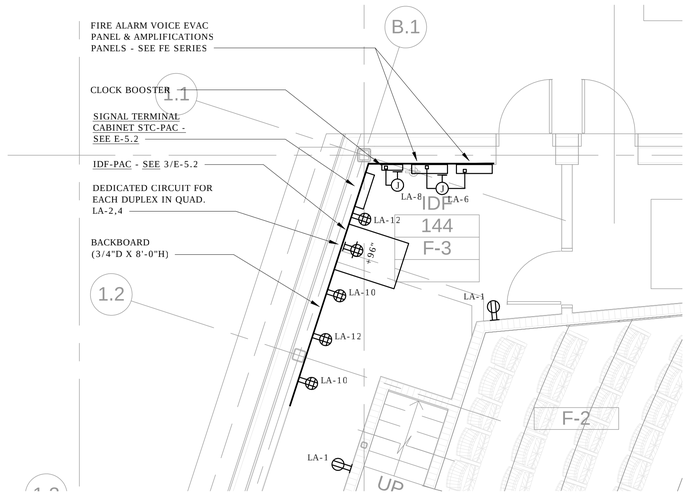

PARTIAL PLAN - IDF - POWER & SIGNAL

SCALE 1/4" = 1' - 0"

3 / E-4.1

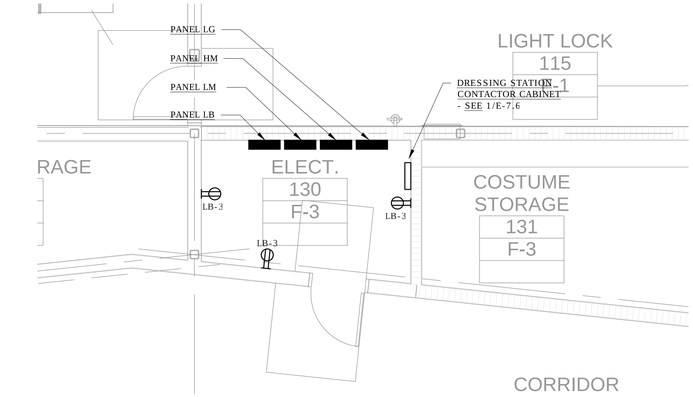

PARTIAL PLAN - ELECTRICAL

SCALE 1/4" = 1' - 0"

1 / E-4.1

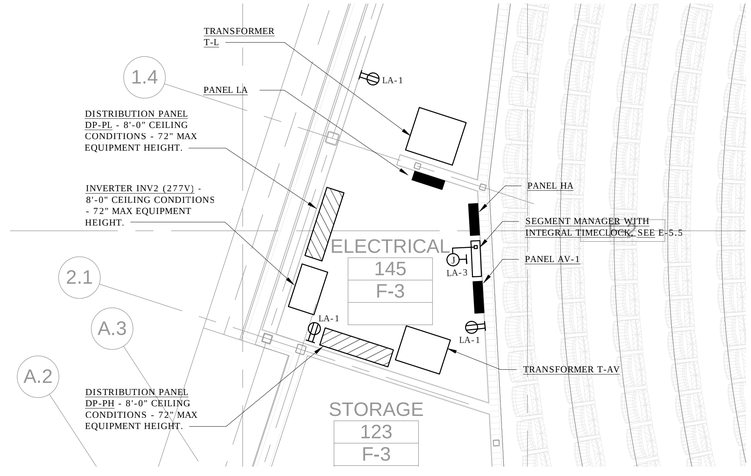

PARTIAL PLAN - MAIN ELECTRICAL ROOM

SCALE 1/4" = 1' - 0"

2 / E-4.1

QUATTROCCHI KWOK ARCHITECTS
Main Office:
636 Fifth Street, Santa Rosa, CA 95404
Pleasanton Office:
600 Main Street, Suite E,
Pleasanton, CA 94566
(707) 576-0829

O'MAHONY & MYER
ELECTRICAL ENGINEERING and LIGHTING DESIGN
4340 REDWOOD HWY., SUITE 245
SAN RAFAEL, CALIFORNIA 94903
(415) 492-0420/FAX (415) 479-9662
www.ommconsulting.com

PAUL J. COLEMAN No. 14738 Exp. 6/21 REGISTERED PROFESSIONAL ENGINEER ELECTRICAL STATE OF CALIFORNIA

FREEDOM HIGH SCHOOL

PERFORMING ARTS AND CTE FACILITIES

1050 NEROLY RD
OAKLEY, CA 94561

LIBERTY UNION HIGH SCHOOL DISTRICT

1	DSA	2019

ARCH PROJECT NO: 1739.00
DRAWN BY: TV/LN/ME
DRAWING SCALE:
PTN: 61721-0068

BID SET

JUNE 28, 2019

SHEET TITLE

FIRST FLOOR PARTIAL PLANS - ELECTRICAL

SHEET NUMBER

E-4.1

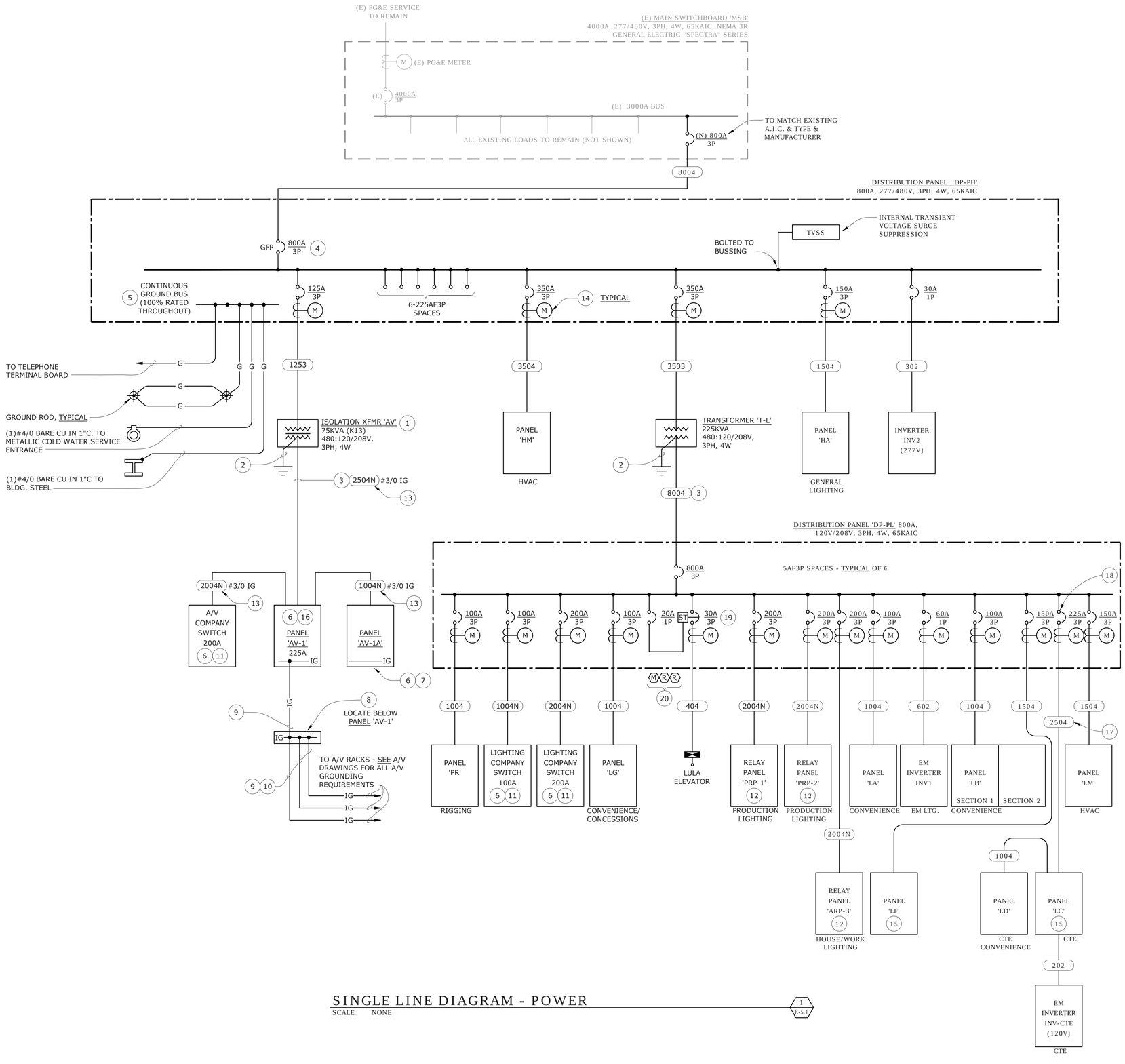

SINGLE LINE DIAGRAM - POWER

SCALE: NONE

1 / E-5.1

COPPER FEEDER SCHEDULE

FEEDER	CONDUIT	CONDUCTORS
8004	(2) 4"	(2)SETS: 4#500 MCM & 1#4/0 GROUND
3503	(1) 3"	(3)350 MCM & (1)#1/0 G.
3504	(1) 3"	(4)350 MCM & (1)#1 G.
2504	(1) 3"	(4)250 MCM & (1)#2 G.
2254	(1) 3"	(4)#4/0 & (1)#4 G.
2004N	(1) 3"	(3)#3/0, (2) #3/0 NEU. & (1)#4 G.
1753	(1) 2"	(3)#2/0 & (1)#4 G.
1754N	(1) 3"	(3)#2/0 & (2)#2/0 NEU. & (1)#4 G.
1504	(1) 2"	(4)#1/0 & (1)#4 G.
1253	(1) 1.25"	(3)#1 & (1)#6 G.
1004N	(1) 2"	(3)#2, (2)#2 NEU. & (1)#6 G.
1004	(1) 1.5"	(4)#2 & (1)#6 G.
602	(1) 1"	(2)#6 & (1)#10 G.
403	(1) 1"	(3)#8 & (1)#6 G.
202	(1) 0.75"	(2)#12 & (1)#12 G.

FEEDER TAG KEY

400 4 N

- INDICATES DOUBLE NEUTRAL
- WIRE QUANTITY
- FEEDER AMPACITY

NOTE: NOT ALL FEEDERS ON THIS SCHEDULE ARE NECESSARILY USED ON THIS PROJECT.

GENERAL ELECTRICAL NOTES

1. CONTRACTOR TO RETAIN INDEPENDENT TESTING COMPANY (EMERSON OR EQUAL) TO PREPARE A SHORT-CIRCUIT AND COORDINATION STUDY (INCLUDING GROUND FAULT), AND ARC-FLASH STUDY FOR DISTRIBUTION SYSTEM, INCLUDING ALL ADJUSTABLE TRIP BREAKERS - SET BREAKER TRIP SETTING AS PER STUDY RECOMMENDATIONS AND IDENTIFY ALL ARC FLASH HAZARD LEVELS ON NEW AND EXISTING EQUIPMENT.

NUMBERED SHEET NOTES

1. PROVIDE AND INSTALL K13, 480V PRIMARY ~208/120V, 3PH, 4W SEC) ISOLATION TRANSFORMER FOR AV LOADS. PROVIDE WITH DOUBLE ELECTROSTATIC SHIELD.
2. PROVIDE AND INSTALL (1)#4/0G. IN 1-1/2"C. TO GROUNDING ELECTRODE.
3. CIRCUIT LENGTH NOT TO EXCEED 25 FEET.
4. LABEL AS 'MAIN BUILDING DISCONNECT'.
5. IN ADDITION TO GROUNDING INDICATED, BOND ALL COLD WATER PIPING SYSTEM, GAS PIPING SYSTEMS, AND SPRINKLER PIPING SYSTEMS TO THE BUILDING GROUNDING ELECTRODE SYSTEM WITH CODE SIZED BONDING CONDUCTOR IN (1) ¾ INCH CONDUIT. BOND WHEREVER THERE IS A BREAK IN THE CONTINUITY OF THESE SYSTEMS THROUGHOUT THE PROJECT.
6. PROVIDE WITH 200% NEUTRAL BUSSING.
7. PROVIDE MOTORIZED BREAKERS IN SEQUENCER CONTROLLED LOAD CENTER, LYNTEC RPC, OR EQUAL. SEE SPECIFICATIONS.
8. AV SYSTEM 'TECHNICAL GROUND' GROUND BUS CABINET WITH ISOLATED GROUND BUS.
9. PROVIDE AND INSTALL (1)#3/0 IN 1-1/2"C.
10. PROVIDE NON-CONDUCTIVE BUSHING AT AV RACK. ENTER RACK AT TOP.
11. PROVIDE COMPANY SWITCH PER SPECIFICATIONS.
12. FURNISHED BY DIV. 11; INSTALL AND CONNECT COMPLETE. PROVIDE WITH INTEGRAL MAIN BREAKERS.
13. PROVIDE ADDITIONAL IG CONDUCTOR, SIZE AS NOTED.
14. TITLE 24 METERING - PROVISIONS ONLY.
15. SPLIT-BUS PANEL (LIGHTING, CONVENIENCE, HVAC) TO COMPLY WITH T24 REQUIREMENTS.
16. PROVIDE SUB-FEEDER BREAKER FOR 200A FEEDER TO COMPANY SWITCH.
17. OVER-SIZED FOR VOLTAGE DROP.
18. OVER-SIZE LUGS.
19. PROVIDE SHUNT TRIP ELEVATOR CIRCUIT BREAKER WITH ALL REQUIRED FIRE ALARM CONNECTIONS - SEE 3/E-5.3 FOR ELEVATOR REQUIREMENTS.
20. REFER TO FE SERIES PLANS FOR FIRE ALARM DEVICE LOCATIONS AND REQUIREMENTS.

QUATTROCCHI KWOK ARCHITECTS
Main Office:
636 Fifth Street, Santa Rosa, CA 95404
Pleasanton Office:
600 Main Street, Suite E,
Pleasanton, CA 94566
(707) 576-0829

O'MAHONY & MYER
ELECTRICAL ENGINEERING and LIGHTING DESIGN
4340 REDWOOD HWY., SUITE 245
SAN RAFAEL, CALIFORNIA 94903
(415) 492-0420/FAX (415) 479-9602
www.ommconsulting.com

PAUL J. COLEMAN No.14738 Exp. 6/21 REGISTERED PROFESSIONAL ENGINEER ELECTRICAL STATE OF CALIFORNIA

FREEDOM HIGH SCHOOL

PERFORMING ARTS AND CTE FACILITIES

1050 NEROLY RD
OAKLEY, CA 94561

LIBERTY UNION HIGH SCHOOL DISTRICT

	DSA	2019

ARCH PROJECT NO: 1739.00
DRAWN BY: TV/LN/ME
DRAWING SCALE:
PTN: 61721-0068

BID SET

JUNE 28, 2019

SHEET TITLE

SINGLE LINE DIAGRAM - POWER

SHEET NUMBER

E-5.1

DATA EQUIPMENT LIST

1	FLOOR - SUPPORTED - TYPE DATA CABINET WITH METAL FRONT DOOR - 52RU : 32"W x 42"D EATON #RSVHHWC WITH 'AIR DAM' KIT (OR EQUAL)	SEE SPECIFICATIONS
2	WIRE MANAGEMENT - TYPICAL	SEE SPECIFICATIONS
3	FIBER OPTIC MULTIPLEXER/CONCENTRATOR AND/OR OTHER ACTIVE NETWORK EQUIPMENT	BY NETWORK INTEGRATOR OR OWNER
4	FIBER OPTIC PATCH PANEL	SEE SPECIFICATIONS
5	CATEGORY 6A MODULAR PATCH CORDS	SEE SPECIFICATIONS
6	FIBER PATCH CORDS	SEE SPECIFICATIONS
7	CATEGORY 6A PATCH PANEL	48-PORT MODULAR TO 110 - SEE SPECIFICATIONS
8		
9	25-PAIR FEEDER CABLE WITH FEMALE AMP END/ PIGTAIL TO 110 BLOCKS	CABLE EXCHANGE #253-X90-50F
10	110 BLOCKS FOR COPPER PAIR TERMINATIONS	SEE SPECIFICATIONS
11	LIGHTNING PROTECTION BLOCKS 100PR 66/66	CIRCA TELECOM #188 DECA1-100 OR EQUAL

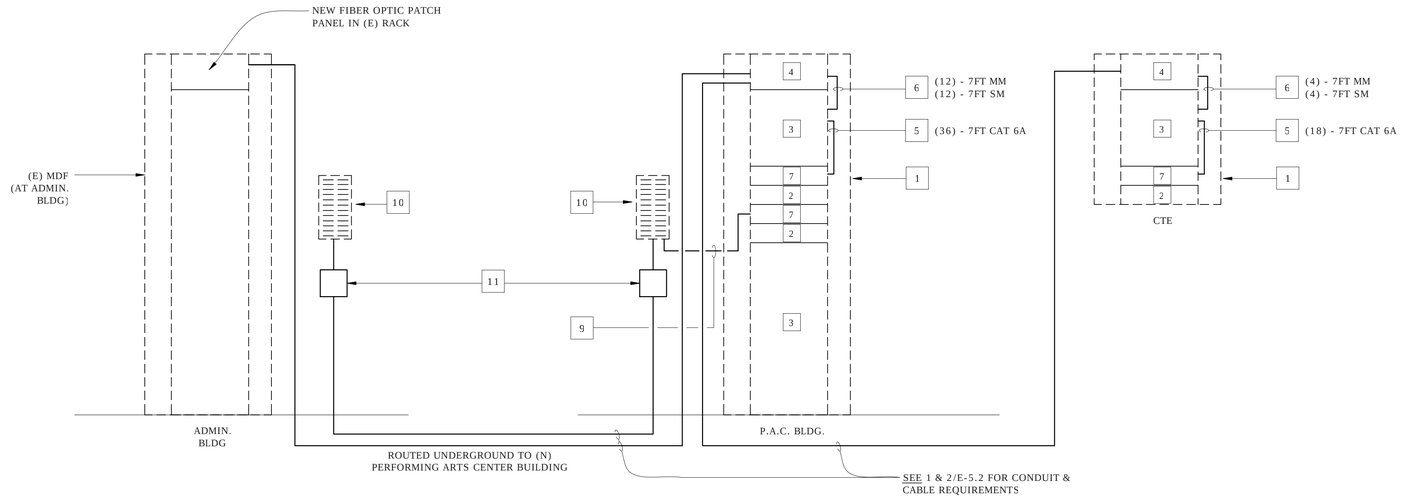

TYPICAL TELECOM CABINET ELEVATIONS

SCALE: NONE

3 / E-5.2

GENERAL CLOCK/SPEAKER NOTES

1. ALL NEW DEVICES SHALL BE COMPATIBLE WITH EXISTING SYSTEM.
2. PROVIDE ALL REQUIRED PROGRAMMING MODIFICATIONS TO THE EXISTING PA AND CLOCK SYSTEM TO ACCOMODATE THESE ADDITIONS. PRIOR TO BID, VERIFY THAT THE EXISTING PROGRAM FILES FOR THIS SITE ARE AVAILABLE. INCLUDE IN THE BID ALL COSTS REQUIRED TO RECREATE ANY MISSING OR DEFECTIVE FILES.
3. ALL RELOCATIONS AND ADDITIONS TO THE EXISTING SYSTEM SHALL BE PERFORMED BY A CURRENTLY AUTHORIZED AND FACTORY-TRAINED DEALER.

SIGNAL SYSTEM NUMBERED NOTES

1. TELECOM CABLING TO BE FULLY TERMINATED ON JACKS AND LOCATED AT A CONCEALED LOCATION FOR CABLE PATCHING TO CLOCK/SPEAKER DEVICE. PROVIDE QUANTITIES AS SHOWN ON THE FLOOR PLANS AND DIAGRAMS. COORDINATE EXACT LOCATION AND REQUIREMENTS PRIOR TO ROUGH-IN.
2. DATA JACK SYMBOLS NOT SHOWN ON FLOOR PLANS FOR CLOCK/SPEAKER DEVICES, ONLY THE CLOCK/SPEAKER SYMBOL. CONTRACTOR SHALL PROVIDE AND INSTALL ALL JACKS, PER THE REQUIREMENTS OF NUMBERED NOTE 1, IN QUANTITIES AS SHOWN ON THE FLOOR PLANS AND DIAGRAMS.

NOTE:
REFER TO FLOOR PLANS FOR QUANTITY AND LOCATION OF ALL DEVICES AND EQUIPMENT.

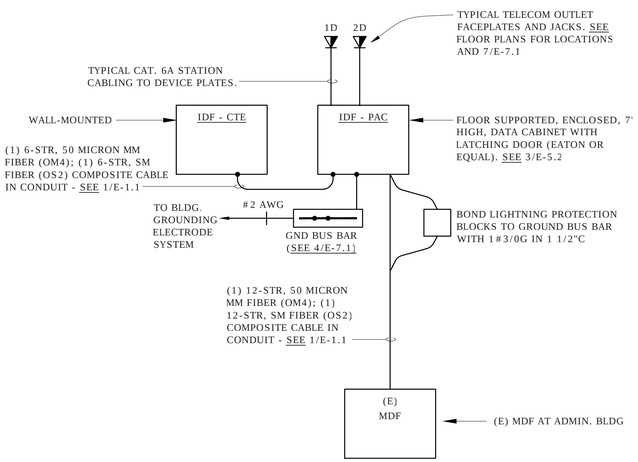

IP TELEPHONE AND DATA SYSTEM RISER DIAGRAM

SCALE: NONE

2 / E-5.2

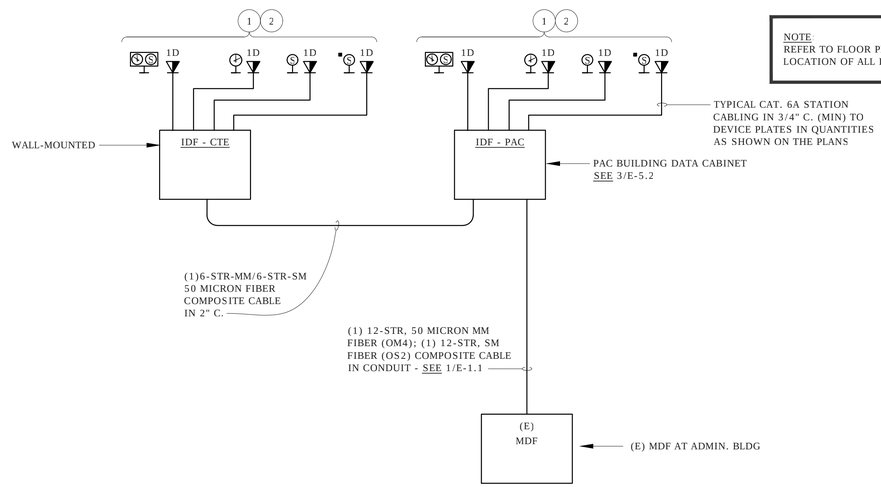

CLOCK / SPEAKER SYSTEM RISER DIAGRAM

SCALE: NONE

1 / E-5.2

QUATTROCCHI KWOK ARCHITECTS
Main Office:
636 Fifth Street, Santa Rosa, CA 95404
Pleasanton Office:
600 Main Street, Suite E,
Pleasanton, CA 94566
(707) 576-0829

O'MAHONY & MYER
ELECTRICAL ENGINEERING and LIGHTING DESIGN
4340 REDWOOD HWY., SUITE 245
SAN RAFAEL, CALIFORNIA 94903
(415) 492-0420/FAX (415) 479-9602
www.ommconsulting.com

PAUL J. COLEMBERO — No. 14738 — Exp. 6/21 — REGISTERED PROFESSIONAL ENGINEER — ELECTRICAL — STATE OF CALIFORNIA

FREEDOM HIGH SCHOOL

PERFORMING ARTS AND CTE FACILITIES

1050 NEROLY RD
OAKLEY, CA 94561

LIBERTY UNION HIGH SCHOOL DISTRICT

1	DSA	2019

ARCH PROJECT NO: 1739.00
DRAWN BY: TV/LN/ME
DRAWING SCALE:
PTN: 61721-0068

BID SET

JUNE 28, 2019

SHEET TITLE

SINGLE LINE DIAGRAM - SIGNAL

SHEET NUMBER

E-5.2

NOTE:

DIAGRAM INTENDED FOR TRUNKLINE SITE ROUTING OF CONDUIT. REFER TO MECHANICAL PLANS FOR ALL EMS REQUIREMENTS.

NUMBERED SHEET NOTES

1. ENERGY MANAGEMENT SYSTEM TERMINAL CABINET - 12"W x 12"H x 6"D, SURFACE MOUNT, WITH HINGED AND LATCHED COVER AND INTERIOR MOUNTING BACKBOARD. LABEL "ENERGY MANAGEMENT SYSTEM". MOUNT UP HIGH ON WALL TO ALLOW SPACE FOR FIRE ALARM EXPANDER PANEL TO BE INSTALLED BELOW. EXPANDER PANEL BY OTHERS.

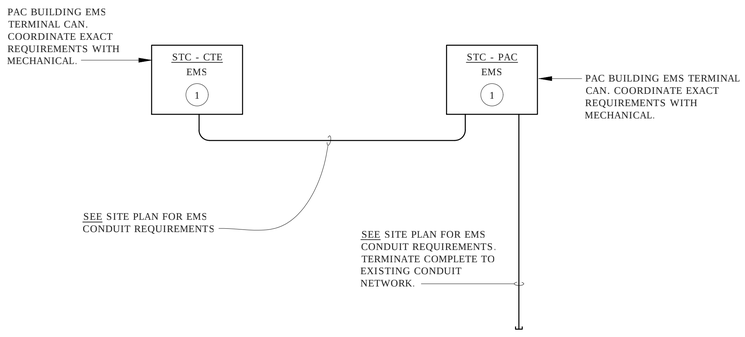

EMS CONDUIT DIAGRAM

SCALE: NONE

2 / E-5.3

NOTES:

DIAGRAM INTENDED FOR TRUNKLINE SITE ROUTING OF CONDUIT AND CABLING. REFER TO FE SERIES FOR ADDITIONAL EQUIPMENT AND REQUIREMENTS

REFER TO FE SERIES FLOOR PLANS FOR QUANTITY AND LOCATION OF ALL DEVICES AND EQUIPMENT.

NUMBERED SHEET NOTES

1. FIRE ALARM SYSTEM TERMINAL CABINET - 12"W x 12"H x 6"D, SURFACE MOUNT, WITH HINGED AND LATCHED COVER AND INTERIOR MOUNTING BACKBOARD. LABEL "FIRE ALARM SYSTEM". MOUNT UP HIGH ON WALL TO ALLOW SPACE FOR FIRE ALARM EXPANDER PANEL TO BE INSTALLED BELOW. EXPANDER PANEL BY OTHERS.

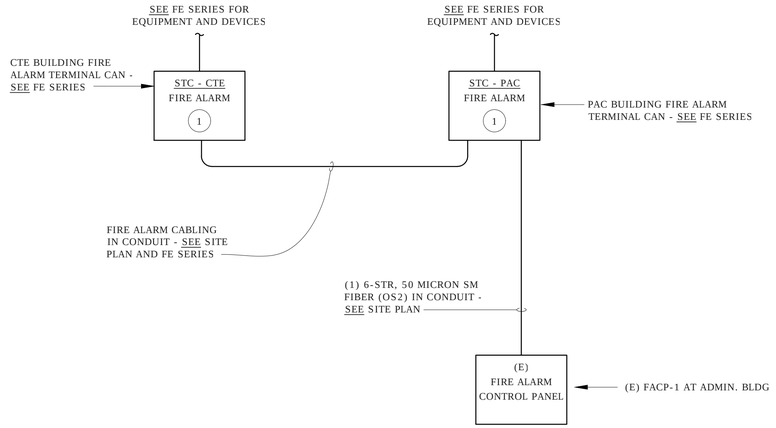

SITE FIRE ALARM SYSTEM DIAGRAM

SCALE: NONE

1 / E-5.3

QUATTROCCHI KWOK ARCHITECTS
Main Office:
636 Fifth Street, Santa Rosa, CA 95404
Pleasanton Office:
600 Main Street, Suite E,
Pleasanton, CA 94566
(707) 576-0829

O'MAHONY & MYER
ELECTRICAL ENGINEERING and LIGHTING DESIGN
4340 REDWOOD HWY., SUITE 245
SAN RAFAEL, CALIFORNIA 94903
(415) 492-0420/FAX (415) 479-9602
www.ommconsulting.com

PAUL J. COLEMAN — No. 14738 — Exp. 6/21 — REGISTERED PROFESSIONAL ENGINEER — ELECTRICAL — STATE OF CALIFORNIA

FREEDOM HIGH SCHOOL

PERFORMING ARTS AND CTE FACILITIES

1050 NEROLY RD
OAKLEY, CA 94561

LIBERTY UNION HIGH SCHOOL DISTRICT

1	DSA	2019

ARCH PROJECT NO: 1739.00
DRAWN BY: TV/LN/ME
DRAWING SCALE:
PTN: 61721-0068

BID SET

JUNE 28, 2019

SHEET TITLE

SINGLE LINE DIAGRAMS - POWER

SHEET NUMBER

E-5.3

THEATRICAL RELAY PANEL 'ARP3' SCHEDULE

CONTROL ZONE DESIGNATION	RELAY	DMX ADDRESS	LOAD VA	LOAD TYPE	ROOM NAME / FIXTURE TYPE
aa	1		67	0-10V	HOUSE / STEPLIGHTS
ab	2		718	DMX	HOUSE SIDE WALLS / WALLWASHERS
*ac	3		33	DMX	HOUSE / DOWNLIGHTS
ad	4		158	DMX	CIRCULATION / STORAGE OFF STAGE
ae	5		53	0-10V	STAGE / STEPLIGHTS
af	6		29	0-10V	ORCHESTRA PIT / STEPLIGHTS
ag	7		396	DMX	AUDITORIUM UNDER CATWALK
ah	8		19	0-10V	AUDITORIUM LIGHT LOCKS / STEPLIGHTS
*ai	9		33	DMX	STAGE LIGHT LOCKS / DOWNLIGHTS
aj	10		19	0-10V	STAGE LIGHT LOCKS / STEPLIGHTS
*ak	11		49	DMX	AUDITORIUM LIGHT LOCKS / DOWNLIGHTS
al	12		96	0-10V	AUDITORIUM TECH LEDGE / STEPLIGHTS
am	13		19	0-10V	STAGE TECH LEDGE / STEPLIGHTS
an	14		480	DMX	BACK OF AUDITORIUM / PENDANTS
ao	15		600	DMX	FRONT OF AUDITORIUM / DOWNLIGHTS
ap	16		2814	0-10V	STAGE / WORKLIGHTS
aq	17		163	0-10V	CATWALK / WORKLIGHTS
ar	18		572	0-10V	TECH LEDGE / WORKLIGHTS
as	19		43	0-10V	STAGE STAIRWELL / STEPLIGHTS
at	20		29	0-10V	CONTROL BOOTH / AUDIO BOOTH STEPLIGHTS
au	21		5	0-10V	AUDITORIUM STAIRWELL / STEPLIGHTS
av	22		19	0-10V	ORCHESTRA PIT / STAIR LIGHTS
*aw	23		66	DMX	AUDITORIUM ACCESS LIFT LIGHTS
*ax	24		153	0-10V	AUDITORIUM STAIRWELL
*ay	25		153	0-10V	STAGE STAIRWELL
az	26		240	SWITCHED	SEAT LIGHTS
ba	27		176	DMX	SPARE
bb	28		353	DMX	AUDITORIUM SR BACK SIDEWALL
bc	29		176	DMX	AUDITORIUM BACK WALL
bd	30		353	DMX	AUDITORIUM BACK WALL
be	31		353	DMX	AUDITORIUM BACK WALL
bf	32		10	0-10V	STAGE FOYER STEP LIGHTS
bg	33		16	0-10V	ELEVATOR DOWNLIGHT
bh	34		529	DMX	AUDITORIUM BACK WALL
bi	35		176	DMX	AUDITORIUM BACK WALL
bj	36		176	DMX	AUDITORIUM BACK WALL
bk	37		353	DMX	AUDITORIUM SL BACK REAR SIDEWALL
bl	38		353	DMX	AUDITORIUM SR BACK SIDEWALL
bm	39		706	DMX	AUDITORIUM FRONT SIDEWALL
bn	40		353	DMX	AUDITORIUM FRONT SIDEWALL
bo	41		176	DMX	SPARE
bp	42		50	DMX	AUDIO ROOM WALLWASH
bq	43		19	0-10V	TECH LEDGE STEPLIGHTS
*br	44		66	DMX	STAGE FOYER DOWNLIGHT
	45				SPARE
	46				SPARE
	47				SPARE
	48				SPARE

* NORMAL/EMERGENCY ZONE - SEE 1/E-5.4 & 1/E-PL5.01 FOR POWER & CONTROL WIRING

NORMAL AND EMERGENCY LIGHTING STATUS

NORMAL POWER LINE IN	RELAY STATUS	NORMAL LIGHTING	EMERGENCY LIGHTING
120VAC	ON	ON	ON
120VAC	OFF	OFF	OFF
UNAVAILABLE	EITHER	OFF (NO POWER)	ON

PROVIDE (1) EMERGENCY LIGHTING CONTROL MODULE PER EACH LOW VOLTAGE RELAY CIRCUITS INDICATED ON RELAY PNL ARP-3 SCHEDULE OR AS NOTED ON ALL LIGHTING PLANS

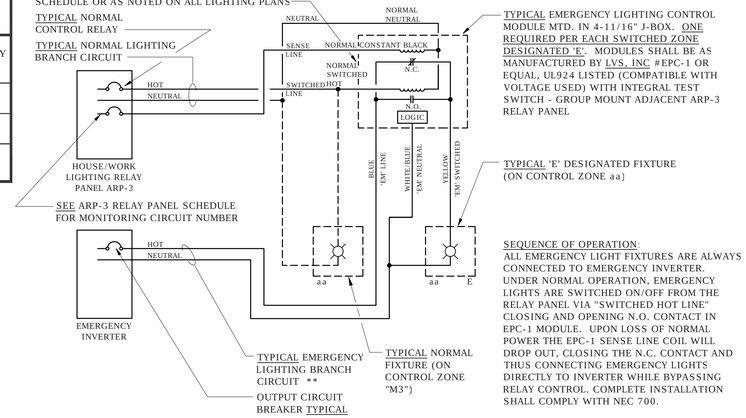

NOTES:
1. SCHEMATIC SHOWN IN DE-ENERGIZED STATE (NORMAL POWER UNAVAILABLE).

** ALL EMERGENCY SOURCE CIRCUITS SHALL BE INSTALLED IN SEPARATE RACEWAYS (FROM NORMAL POWER), PER 2016 NEC 700.10(B), OR APPLICABLE CODE AT THE TIME OF PERMITTING.

EMERGENCY LIGHTING CONTROL MODULE WIRING DIAGRAM FOR HOUSE/WORK LIGHTING RELAY PANEL ARP-3 CONTROLLED EMERGENCY (AND NORMAL FIXTURES)

1 E-5.4

SCALE: NONE
FILE: L:\DETAILS\LIGHT\LTG CONTROL\LLC002A-HORIZ

QUATTROCCHI KWOK ARCHITECTS
Main Office:
636 Fifth Street, Santa Rosa, CA 95404
Pleasanton Office:
600 Main Street, Suite E,
Pleasanton, CA 94566
(707) 576-0829

O'MAHONY & MYER
ELECTRICAL ENGINEERING and LIGHTING DESIGN
4340 REDWOOD HWY., SUITE 245
SAN RAFAEL, CALIFORNIA 94903
(415) 492-0420/FAX (415) 479-9662
www.ommconsulting.com

PAUL J. COLEMAN No. 14738 Exp. 6/21 REGISTERED PROFESSIONAL ENGINEER ELECTRICAL STATE OF CALIFORNIA

FREEDOM HIGH SCHOOL

PERFORMING ARTS AND CTE FACILITIES

1050 NEROLY RD
OAKLEY, CA 94561

LIBERTY UNION HIGH SCHOOL DISTRICT

	DSA	2019

ARCH PROJECT NO: 1739.00
DRAWN BY: TV/LN/ME
DRAWING SCALE:
PTN: 61721-0068

BID SET

JUNE 28, 2019

SHEET TITLE

HOUSE LIGHTING CONTROLS

SHEET NUMBER

E-5.4

FREEDOM HS PERFORMING ARTS CENTER AND CTE - 218054

SEQUENCE OF OPERATION:
Upon the loss of normal power, the LVS Emergency Control Module will bypass the Room Controller and force the emergency fixtures ON. The Room Controller will force the dimmed emergency fixture to 100%. The LVS is UL924 listed.

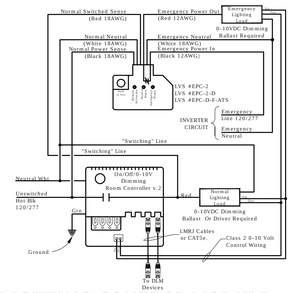

EMERGENCY LIGHTING CONTROL MODULE
WIRING DIAGRAM FOR DIMMED EMERGENCY
FIXTURES CONTROLLED BY 0-10V DIMMING ROOM CONTROLLER

3 / E5.5

SCALE: NONE
FILE: L:\DETAILS\LIGHT\LTG CONTROL WATTSTOPPER DLM\LLCW010

WIRING LEGEND

- BRANCH CIRCUIT WIRING - PROVIDED AND INSTALLED BY CONTRACTOR. EXACT QTY., TYPE AND SIZE VARIES
- CAT5e CABLING - PROVIDED AND INSTALLED BY CONTRACTOR, VERIFY WIRE TYPE WITH LIGHTING CONTROL MANUFACTURER
- 0-10V DIMMING CONTROL WIRING

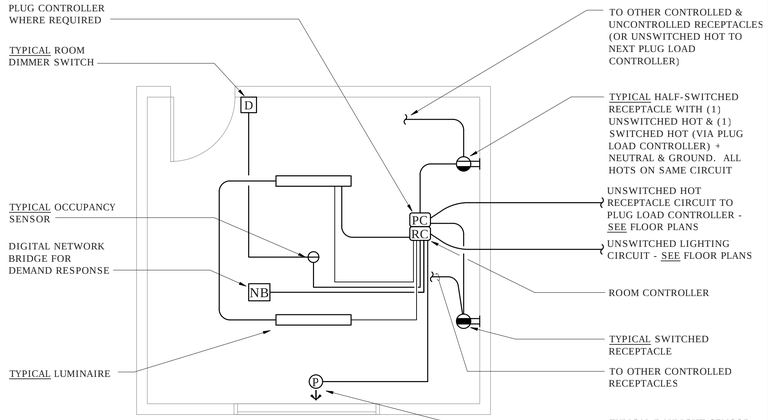

NOTE:
SEE SPECIFIC ROOM CONTROLLER WIRING DIAGRAMS FOR EACH APPLICATION.

TYPICAL ROOM CONTROL DIAGRAM WITH DEMAND RESPONSE CAPABILITY

1 / E5.5

SCALE: NONE
FILE: L:\DETAILS\LIGHT\LTG CONTROL WATTSTOPPER DLM\LLCW007A

EMS SYSTEM INTERFACE:

1. COORDINATE WITH DISTRICT EMS SYSTEM FOR BACNET INTERFACE BETWEEN LIGHTING CONTROLS & EMS SYSTEM.
2. PROVIDE BACNET INTERFACE EXPORT TABLE DATA FOR PROPER BINDINGS.
3. CONSULT DISTRICT FOR SPECIFIC STATUS & CONTROL FUNCTIONS TO BE INCLUDED IN INTERFACE.

CORRIDORS & STAIRWAYS:

Run Cat5 cable from room controller to Segment Manager. Multi-zone 0-10v dimmed application with ceiling mounted occupancy sensors for Partial Off w/ Auto Off and manual dimming. Lights will turn on automatically from the occupancy sensor upon entering the space, and can be dimmed manually from the device on the wall. Lights will dim down to a 50% light level when the space is un-occupied during the buildings "Occupied Hours". Upon entering the "After-Hours" mode, the same occupancy sensors will automatically turn the lights off when the space is unoccupied. Time-out of sensor to be set at 20 minutes.

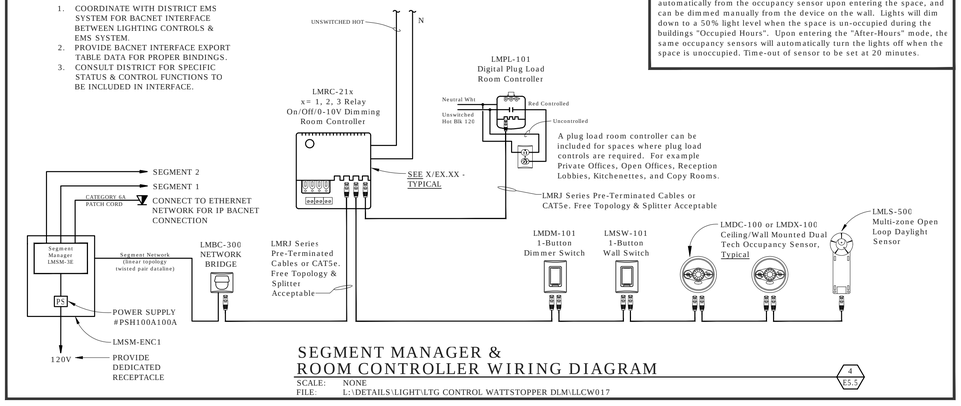

SEGMENT MANAGER &
ROOM CONTROLLER WIRING DIAGRAM

4 / E5.5

SCALE: NONE
FILE: L:\DETAILS\LIGHT\LTG CONTROL WATTSTOPPER DLM\LLCW017

NOTE:
One, two or three zone 0-10v dimmed application with wall or ceiling mounted occupancy sensor(s) for shut off and manual dimming. Lights will turn on automatically from the occupancy sensor upon entering the space and can be dimmed or switched manually from the device on the wall. Lights will be turned off automatically by the occupancy sensor. Time-out of sensor to be set at 20 minutes.

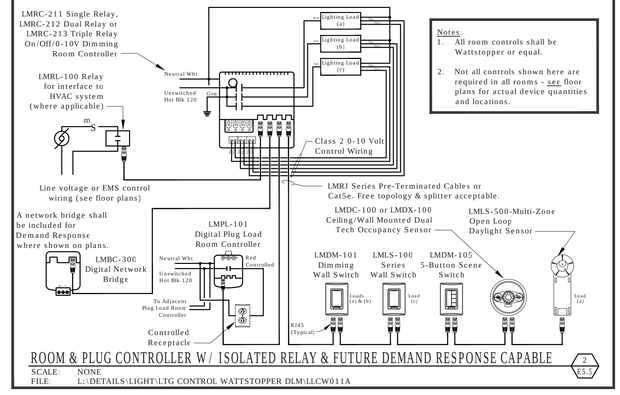

Notes:
1. All room controls shall be Wattstopper or equal.
2. Not all controls shown here are required in all rooms - see floor plans for actual device quantities and locations.

ROOM & PLUG CONTROLLER W/ ISOLATED RELAY & FUTURE DEMAND RESPONSE CAPABLE

2 / E5.5

SCALE: NONE
FILE: L:\DETAILS\LIGHT\LTG CONTROL WATTSTOPPER DLM\LLCW011A

QUATTROCCHI KWOK ARCHITECTS
Main Office:
636 Fifth Street, Santa Rosa, CA 95404
Pleasanton Office:
600 Main Street, Suite E,
Pleasanton, CA 94566
(707) 576-0829

O'MAHONY & MYER
ELECTRICAL ENGINEERING and LIGHTING DESIGN
4340 REDWOOD HWY., SUITE 245
SAN RAFAEL, CALIFORNIA 94903
(415) 492-0420/FAX (415) 479-9602
www.ommconsulting.com

PAUL J. COLEMAN No. 14738 Exp. 6/21 REGISTERED PROFESSIONAL ENGINEER ELECTRICAL STATE OF CALIFORNIA

FREEDOM HIGH SCHOOL

PERFORMING ARTS AND CTE FACILITIES

1050 NEROLY RD
OAKLEY, CA 94561

LIBERTY UNION HIGH SCHOOL DISTRICT

1	DSA	2019

ARCH PROJECT NO: 1739.00
DRAWN BY: TV/LN/ME
DRAWING SCALE:
PTN: 61721-0068

BID SET

JUNE 28, 2019

SHEET TITLE

LIGHTING CONTROL DIAGRAMS

SHEET NUMBER

E-5.5

FREEDOM HS PERFORMING ARTS CENTER AND CTE - 218054

INVERTER OUTPUT PANEL INV1

VOLTS: 120
PHASE: 1
BUSSING:
POLES: 30P

LOAD DESCRIPTION	KVA	BRKR.	CKT
FIRST FLOOR		20/1	1
STAIRWELLS / CONTROL BOOTH LEVEL		20/1	2
TECH LEDGE LEVEL		20/1	3
AUDITORIUM NORMALLY OFF PENDANTS	0.8	20/1	4
STAGE NORMALLY OFF PENDANTS	0.8	20/1	5
DMX EMERGENCY BYPASS CONTROLS	0.01	20/1	6
SPARE		20/1	7
SPARE		20/1	8
	1.61		

PHASE A: 1610 **VA**

13.42 **MAX AMPS**

INVERTER UNIT SPECIFICATIONS

1. ALL EMERGENCY SOURCE CIRCUITS SHALL BE INSTALLED IN SEPARATE RACEWAYS (FROM NORMAL POWER), PER 2014 NEC 700.10(B), OR APPLICABLE CODE AT THE TIME OF PERMITTING.
2. REFER ALSO TO SPECIFICATIONS SECTION 265101. UNITS SHALL BE MYERS POWER PRODUCTS OR APPROVED EQUAL:
   'INV1': 1-EM-2-S-BA2006/NA2002-T-S-M-2YW
   'INV2': 6-E-4-S-BD2006-E-F-M-S-T-Z-2YW
   'INV-CTE': 1-EM-1-S-BA2002-T-S-M-2YW
3. UNITS SHALL BE 120V OR 277V 1PH 2W INPUT, 120V OR 277V OUTPUT WITH 20AMP OUTPUT CIRCUIT BREAKER, RATED AS FOLLOWS:
   'INV1': 2.8KVA
   'INV2': 3.75KVA
   'INV-CTE': 1.0KVA
4. INPUT SHALL BE EQUIPPED WITH ANSI 62.41 SURGE PROTECTION AND 1HZ NOMINAL SYNCHRONIZING SLEW RATE.
5. OUTPUT VOLTAGE STATIC REGULATION SHALL BE +/- 5% FOR 100% RESISTIVE LOAD.
6. OUTPUT DISTORTION SHALL BE 5% THD MAXIMUM.
7. OVERLOAD RATING: 150% MOMENTARY; 120% FOR 5 MINUTES.
8. TRANSFER TIME: NO BREAK
9. BATTERY SHALL BE SEALED LEAD CALCIUM, 10 YEAR LIFE, 90 MINUTE RUN TIME, WITH AUTO-DISCONNECT FOR LOW BATTERY VOLTAGE.
10. PROVIDE RS232 PORT FOR EXTERNAL COMMUNICATIONS.
11. INVERTER SHALL BE PWM TYPE.
12. PROVIDE MAINTENANCE BYPASS.
13. PROVIDE IN NEMA 1 ENCLOSURE, FRONT ACCESS ONLY.
14. PROVIDE FACTORY STARTUP AND TEST OF EACH UNIT TO THE SATISFACTION OF BUILDING INSPECTION AUTHORITIES AND WITH MAXIMUM 4 HOURS OF PERSONNEL TRAINING FOLLOWING STARTUP.
15. AUTO SELF TESTING.
16. PROVIDE QUANTITY OF OUTPUT CIRCUIT BREAKERS NOTED ON INVERTER SCHEDULE RATED 20AMPS EACH WITH DEDICATED CIRCUITS FOR EACH OF THE EMERGENCY LIGHTING LOADS. PROVIDE (2) CIRCUIT BREAKERS FOR INV-CTE.
17. ALL OUTPUT BREAKERS SHALL BE NORMALLY ON, EXCEPT INV1-4 & INV1-5, WHICH SHALL BE NORMALLY OFF.
18. PROVIDE REMOTE STATUS PANEL FOR 'INV1' AND 'INV2'.
19. CEC 2016 SPECIAL SEISMIC CERTIFICATION.
20. SUBMIT FOR REVIEW AND APPROVAL.

PANEL HM

VOLTS: 277/480
PHASE: 3 PH
WIRE: 4 W
BUSSING: 400A
POLES: 42P

ALL BREAKERS TYPE HACR

MAIN BRKR: MLO
FEEDER: SEE SINGLE LINE
CONDUIT: SEE SINGLE LINE
MOUNTED: SURFACE
AIC RATING: SERIES

LOAD DESCRIPTION	TYPE	A	B	C	BRKR.	CKT.	CKT.	BRKR.	A	B	C	TYPE	LOAD DESCRIPTION
	H	10.30				1	2		12.45			H	
AC-1	H		10.30		50/3	3	4	60/3		12.45		H	AC-3
	H			10.30		5	6				12.45	H	
	H	10.30				7	8		4.16			H	
AC-2	H		10.30		50/3	9	10	25/3		4.16		H	AC-4
	H			10.30		11	12				4.16	H	
	H	3.88				13	14		5.54			H	
AC-8	H		3.88		20/3	15	16	30/3		5.54		H	AC-5
	H			3.88		17	18				5.54	H	
	H	7.20				19	20		3.88			H	
AC-9	H		7.20		40/3	21	22	20/3		3.88		H	AC-6
	H			7.20		23	24				3.88	H	
SPARE					20/1	25	26		3.88			H	
SPARE					20/1	27	28	20/3		3.88		H	AC-7
SPARE					20/1	29	30				3.88	H	
SPARE					20/1	31	32		5.70			H	
SPARE					20/1	33	34	30/3		5.70		H	HP-1
SPARE					20/1	35	36				5.70	H	
SPARE					20/1	37	38	20/1					SPARE
SPARE					20/1	39	40	20/1					SPARE
SPARE					20/1	41	42	20/1					SPARE
		31.68	31.68	31.68					35.61	35.61	35.61		

DEMAND LOAD SUMMARY	CONN. KVA	DEMAND FACTOR	DEMAND KVA
TYPE "M": NON-CONTINUOUS / MISC. LOADS	0.00	100%	0.00
TYPE "L": LIGHTING / CONTINUOUS LOADS	0.00	125%	0.00
TYPE "R": RECEPTACLES (FIRST 10KVA)	0.00	100%	0.00
TYPE "R": RECEPTACLES (OVER 10KVA)	0.00	50%	0.00
TYPE "H": HVAC / MECHANICAL LOADS	201.87	100%	201.87
TOTALS:	201.87		201.87

PHASE A: 67.29 **KVA**
PHASE B: 67.29 **KVA**
PHASE C: 67.29 **KVA**

242.92 **MAX AMPS / PHASE**

PANEL AV-1

VOLTS: 120 / 208
PHASE: 3 PH
WIRE: 4 W
BUSSING: 400A
POLES: 30P

NOTES
1. PROVIDE 200% RATED NEUTRAL BUS
2. PROVIDE ISOLATED GROUND BUS PLUS STANDARD GROUND BUS

MAIN BRKR: 250A3P
FEEDER: SEE SINGLE LINE
CONDUIT: SEE SINGLE LINE
MOUNTED: SURFACE
AIC RATING: 65K AIC

LOAD DESCRIPTION	TYPE	A	B	C	BRKR.	CKT.	CKT.	BRKR.	A	B	C	TYPE	LOAD DESCRIPTION
PANEL AV-1A POWER SUPPLY	M	0.20			20/1	1	2	20/1					SPARE
SPARE					20/1	3	4	20/1					SPARE
SPARE					20/1	5	6	20/1					SPARE
SPARE					20/1	7	8						
SPARE					20/1	9	10						SPACE (100AF 3P)
SPARE					20/1	11	12						
SPARE					20/1	13	14						
SPARE					20/1	15	16						SPACE (100AF 3P)
SPARE					20/1	17	18						
	M	5.16				19	20	20/1					SPARE
PANEL AV-1A	M		4.80		100/3	21	22	20/1					SPARE
	M			4.20		23	24	20/1					SPARE
						25	26		18.00			M	
SPACE (100AF 3P)						27	28	200/3*		18.00		M	A/V COMPANY SWITCH
						29	30				18.00	M	
		5.36	4.80	4.20					18.00	18.00	18.00		

* PROVIDE AS SURVEYED BREAKER

DEMAND LOAD SUMMARY	CONN. KVA	DEMAND FACTOR	DEMAND KVA
TYPE "M": NON-CONTINUOUS / MISC. LOADS	68.36	100%	68.36
TYPE "L": LIGHTING / CONTINUOUS LOADS	0.00	125%	0.00
TYPE "R": RECEPTACLES (FIRST 10KVA)	0.00	100%	0.00
TYPE "R": RECEPTACLES (OVER 10KVA)	0.00	50%	0.00
TYPE "H": HVAC / MECHANICAL LOADS	0.00	100%	0.00
TOTALS:	68.36		68.36

PHASE A: 23.36 **KVA**
PHASE B: 22.80 **KVA**
PHASE C: 22.20 **KVA**

194.67 **MAX AMPS / PHASE**

PANEL LA

VOLTS: 120 / 208
PHASE: 3 PH
WIRE: 4 W
BUSSING: 100A
POLES: 42P

MAIN BRKR: MLO
FEEDER: SEE SINGLE LINE
CONDUIT: SEE SINGLE LINE
MOUNTED: SURFACE
AIC RATING: SERIES

LOAD DESCRIPTION	TYPE	A	B	C	BRKR.	CKT.	CKT.	BRKR.	A	B	C	TYPE	LOAD DESCRIPTION
MAIN ELEC RM	R	0.90			20/1	1	2	20/1	0.50			M	IDF-PAC
LIGHTING CONTROLS	M		0.20		20/1	3	4	20/1		0.50		M	IDF-PAC
AMP, AUDIO, CONTROL RM, LEDGE, CIRC.	R			0.90	20/1	5	6	20/1			0.50	M	FAEP-PAC
AMP, AUDIO, CONTROL RM, LEDGE, CIRC.	R	0.90			20/1	7	8	20/1	0.20			M	CLOCK BOOSTER
AMP, AUDIO, CONTROL RM, LEDGE, CIRC.	R		0.90		20/1	9	10	20/1		0.72		R	IDF ROOM
CONTROL RM COUNTER	R			0.72	20/1	11	12	20/1			0.72	R	IDF ROOM
LEDGE, STORAGE	R	0.54			20/1	13	14	20/1	0.54			R	AUDITORIUM
LEDGE, STORAGE	R		0.54		20/1	15	16	30/2		1.20		M	PROJECTOR
LEDGE, STORAGE	R			0.54	20/1	17	18				1.20	M	
FOLLOW SPOT	M	1.50				19	20		1.50			M	
	M		1.50		20/3	21	22	20/3		1.50		M	FOLLOW SPOT
	M			1.50		23	24				1.50	M	
EXTERIOR RECEPTACLES	R	0.36			20/1	25	26	20/1	0.25			M	SPRINKLER BELL
AUDITORIUM, STORAGE	R		0.90		20/1	27	28	20/1		0.72		R	LEDGE
AUDITORIUM, STORAGE	R			0.72	20/1	29	30	20/1			0.72	R	PLD-LC-8 & PLD-C-9
SPARE					20/1	31	32	20/1	0.54			R	AUDITORIUM
SPARE					20/1	33	34	20/1					SPARE
SPARE					20/1	35	36	20/1					SPARE
SPARE					20/1	37	38	20/1	0.36			R	PLD-C-7
SPARE					20/1	39	40	20/1					SPARE
SPARE					20/1	41	42	20/1					SPARE
		4.20	4.04	4.38					3.89	4.64	4.64		

DEMAND LOAD SUMMARY	CONN. KVA	DEMAND FACTOR	DEMAND KVA
TYPE "M": NON-CONTINUOUS / MISC. LOADS	13.55	100%	13.55
TYPE "L": LIGHTING / CONTINUOUS LOADS	0.00	125%	0.00
TYPE "R": RECEPTACLES (FIRST 10KVA)	10.00	100%	10.00
TYPE "R": RECEPTACLES (OVER 10KVA)	2.24	50%	1.12
TYPE "H": HVAC / MECHANICAL LOADS	0.00	100%	0.00
TOTALS:	25.79		24.67

PHASE A: 8.09 **KVA**
PHASE B: 8.68 **KVA**
PHASE C: 9.02 **KVA**

75.17 **MAX AMPS / PHASE**

PANEL AV-1A

VOLTS: 120 / 208
PHASE: 3 PH
WIRE: 4 W
BUSSING: 100A
POLES: 41P

NOTES
1. PROVIDE IG BUS IN ADDITION TO STANDARD GROUND BUS.
2. PROVIDE 200% RATED NEUTRAL BUS.
3. PANEL SHALL BE LYNTEC RPC TYPE, WITH MOTORIZED BREAKERS

MAIN BRKR: MLO
FEEDER: SEE SINGLE LINE
CONDUIT: SEE SINGLE LINE
MOUNTED: SURFACE
AIC RATING: SERIES

LOAD DESCRIPTION	TYPE	A	B	C	BRKR.	CKT.	CKT.	BRKR.	A	B	C	TYPE	LOAD DESCRIPTION
A/V RACKS - AMP RM	M	0.75			20/1	1	2	20/1	0.36			R	AUDITORIUM FLOOR POCKET
A/V RACKS - AMP RM	M		0.75		20/1	3	4	20/1		0.36		R	AUDITORIUM FRONT
A/V RACKS - AMP RM	M			0.75	20/1	5	6	20/1			0.36	R	AUDITORIUM FRONT
A/V RACKS - AMP RM	M	0.75			20/1	7	8	20/1	0.36			R	STAGE - FLOOR POCKET
A/V RACKS - AMP RM	M		0.75		20/1	9	10	20/1		0.36		R	STAGE - FLOOR POCKET
A/V RACKS - AMP RM	M			0.75	20/1	11	12	20/1			0.36	R	STAGE - FLOOR POCKET
A/V RACK - STAGE	M	0.75			20/1	13	14	20/1	0.36			R	STAGE
A/V RACK - STAGE	M		0.75		20/1	15	16	20/1		0.36		R	STAGE
SPARE					20/1	17	18	20/1			0.36	R	STAGE
SPARE					20/1	19	20	20/1					SPARE
SPARE	R				20/1	21	22	20/1					SPARE
SPARE	R				20/1	23	24	20/1			0.36	R	STAGE
SPARE					20/1	25	26	20/1	0.36			R	GRID OVER STAGE
SPARE	R				20/1	27	28	20/1		0.36		R	SR AND SL CATWALKS
SPARE	R				20/1	29	30	20/1			0.54	R	TECH LEDGE, CATWALK
A/V RACK - AUDIO RM	M	0.75			20/1	31	32	20/1	0.36			R	TECH LEDGE
A/V RACK - AUDIO RM	M		0.75		20/1	33	34	20/1		0.36		R	TECH LEDGE
AUDIO RM	R			0.36	20/1	35	36	20/1			0.36	R	LIGHT LEDGES
CONTROL BOOTH	R	0.36			20/1	37	38	20/1					SPARE
SPARE					20/1	39	40	20/1					SPARE
SPARE					20/1	41	42						
		3.36	3.00	1.86					1.80	1.80	2.34		

DEMAND LOAD SUMMARY	CONN. KVA	DEMAND FACTOR	DEMAND KVA
TYPE "M": NON-CONTINUOUS / MISC. LOADS	7.50	100%	7.50
TYPE "L": LIGHTING / CONTINUOUS LOADS	0.00	125%	0.00
TYPE "R": RECEPTACLES (FIRST 10KVA)	6.66	100%	6.66
TYPE "R": RECEPTACLES (OVER 10KVA)	0.00	50%	0.00
TYPE "H": HVAC / MECHANICAL LOADS	0.00	100%	0.00
TOTALS:	14.16		14.16

PHASE A: 5.16 **KVA**
PHASE B: 4.80 **KVA**
PHASE C: 4.20 **KVA**

43.00 **MAX AMPS / PHASE**

INVERTER OUTPUT PANEL INV2

VOLTS: 277
PHASE: 1
BUSSING: 30A
POLES: 6P

LOAD DESCRIPTION	KVA	BRKR.	CKT
LTG - ELECT, STAIR, CORRIDOR 110,	0.85	20/1	1
LTG - LOBBY, CORR 109, CHORAL, THEATRICAL, RR	1.38	20/1	2
LTG - EXTERIOR	0.68	20/1	3
SPARE		20/1	4
SPARE		20/1	5
SPARE		20/1	6
	2.91		

PHASE A: 2910 **VA**

10.51 **MAX AMPS**

PANEL HA

VOLTS: 277 / 480
PHASE: 3 PH
WIRE: 4 W
BUSSING: 225A
POLES: 24P

MAIN BRKR: MLO
FEEDER: SEE SINGLE LINE
CONDUIT: SEE SINGLE LINE
MOUNTED: SURFACE
AIC RATING: SERIES

LOAD DESCRIPTION	TYPE	A	B	C	BRKR.	CKT.	CKT.	BRKR.	A	B	C	TYPE	LOAD DESCRIPTION
LTG - SITE	L	0.85			20/1	1	2	20/1	1.02			L	LTG - ELEC, TICKETS, CONTROL BOOTHS
LTG - SITE	L		0.90		20/1	3	4	20/1		1.94		L	LTG - LOBBY, STUDENT COMMONS
LTG - MENS/WOMENS, CHORAL, PRACTICE	L			1.44	20/1	5	6	20/1			0.62	L	LTG - SOFFIT DOWNLIGHTS
LTG - THEATRE ARTS, OFFICE, STORAGE	L	1.32			20/1	7	8	20/1					SPARE
LTG - PROP STORAGE	L		1.93		20/1	9	10	20/1					SPARE
LTG - CIRC 110, DRESSING, CHANGING	L			1.69	20/1	11	12	20/1					SPARE
SPARE					20/1	13	14	20/1					SPARE
SPARE					20/1	15	16	20/1					SPARE
SPARE					20/1	17	18	20/1					SPARE
					20/1	19	20	20/1					
					20/1	21	22	20/1					
					20/1	23	24	20/1					
						25	26						
						27	28						
						29	30						
						31	32						
						33	34						
						35	36						
						37	38						
						39	40						
						41	42						
		2.17	2.83	3.13					1.02	1.94	0.62		

DEMAND LOAD SUMMARY	CONN. KVA	DEMAND FACTOR	DEMAND KVA
TYPE "M": NON-CONTINUOUS / MISC. LOADS	0.00	100%	0.00
TYPE "L": LIGHTING / CONTINUOUS LOADS	11.71	125%	14.64
TYPE "R": RECEPTACLES (FIRST 10KVA)	0.00	100%	0.00
TYPE "R": RECEPTACLES (OVER 10KVA)	0.00	50%	0.00
TYPE "H": HVAC / MECHANICAL LOADS	0.00	100%	0.00
TOTALS:	11.71		14.64

PHASE A: 3.19 **KVA**
PHASE B: 4.77 **KVA**
PHASE C: 3.75 **KVA**

17.22 **MAX AMPS / PHASE**

QUATTROCCHI KWOK ARCHITECTS
Main Office:
636 Fifth Street, Santa Rosa, CA 95404
Pleasanton Office:
600 Main Street, Suite E,
Pleasanton, CA 94566
(707) 576-0829

O'MAHONY & MYER
ELECTRICAL ENGINEERING and LIGHTING DESIGN
4340 REDWOOD HWY., SUITE 245
SAN RAFAEL, CALIFORNIA 94903
(415) 492-0420/FAX (415) 479-9662
www.ommconsulting.com

PAUL J. COLEMAN — No. 14738 — Exp. 6/21 — REGISTERED PROFESSIONAL ENGINEER — ELECTRICAL — STATE OF CALIFORNIA

FREEDOM HIGH SCHOOL

PERFORMING ARTS AND CTE FACILITIES

1050 NEROLY RD
OAKLEY, CA 94561

LIBERTY UNION HIGH SCHOOL DISTRICT

	DSA	2019

ARCH PROJECT NO: 1739.00
DRAWN BY: TV/LN/ME
DRAWING SCALE:
PTN: 61721-0068

BID SET

JUNE 28, 2019

SHEET TITLE

PANEL SCHEDULES

SHEET NUMBER

E-6.1

FREEDOM HS PERFORMING ARTS CENTER AND CTE - 218054

PANEL LD

VOLTS: 120 / 208
PHASE: 3 PH
WIRE: 4 W
BUSSING: 100A
POLES: 42P

MAIN BRKR: MLO
FEEDER: SEE SINGLE LINE
CONDUIT: SEE SINGLE LINE
MOUNTED: SURFACE
AIC RATING: SERIES

LOAD DESCRIPTION	TYPE	A	B	C	BRKR.	CKT.	CKT.	BRKR.	A	B	C	TYPE	LOAD DESCRIPTION
SHOP	R	1.00			20/1	1	2	20/1	1.00			R	SHOP
SHOP	R		1.00		20/1	3	4	20/1		1.00		R	SHOP
SHOP	R			1.00	20/1	5	6	20/1			1.00	R	SHOP
SHOP CORD REEL	R	1.00			20/1	7	8	20/1	1.00			R	SHOP
SHOP CORD REEL	R		1.00		20/1	9	10	20/1		1.00		R	SHOP CORD REEL
SHOP CORD REEL	R			1.00	20/1	11	12	20/1			1.00	R	SHOP CORD REEL
SHOP	R	1.00			20/2	13	14		1.50				
			1.00			15	16	20/3		1.50		R	SHOP
SHOP	R			1.00	20/2	17	18				1.50		
		1.00				19	20						
SHOP	R		2.00		30/2	21	22	20/3					SPARE
				2.00		23	24						
SPARE					20/2	25	26						
						27	28	30/3					SPARE
SPARE					30/2	29	30						
						31	32	20/1					SPARE
SPARE					20/1	33	34	20/1					SPARE
SPARE					20/1	35	36	20/1					SPARE
SPARE					20/1	37	38	20/1					SPARE
SPARE					20/1	39	40	20/1					SPARE
SPARE					20/1	41	42	20/1					SPARE
		4.00	5.00	5.00					3.50	3.50	3.50		

DEMAND LOAD SUMMARY	CONN. KVA	DEMAND FACTOR	DEMAND KVA
TYPE "M": NON-CONTINUOUS / MISC. LOADS	0.00	100%	0.00
TYPE "L": LIGHTING / CONTINUOUS LOADS	0.00	125%	0.00
TYPE "R": RECEPTACLES (FIRST 10KVA)	10.00	100%	10.00
TYPE "R": RECEPTACLES (OVER 10KVA)	7.50	50%	3.75
TYPE "H": HVAC / MECHANICAL LOADS	0.00	100%	0.00
TOTALS:	17.50		13.75

PHASE A: 7.50 **KVA**
PHASE B: 8.50 **KVA**
PHASE C: 8.50 **KVA**

70.83 **MAX AMPS / PHASE**

PANEL LB

VOLTS: 120 / 208
PHASE: 3 PH
WIRE: 4 W
BUSSING: 225A
POLES: 42P

MAIN BRKR: MLO
FEEDER: SEE SINGLE LINE
CONDUIT: SEE SINGLE LINE
MOUNTED: SURFACE
AIC RATING: SERIES

LOAD DESCRIPTION	TYPE	A	B	C	BRKR.	CKT.	CKT.	BRKR.	A	B	C	TYPE	LOAD DESCRIPTION
ROOF	R	1.08			20/1	1	2	20/1	0.36			R	CATWALK SR
SECONDARY ELEC RM	R		0.54		20/1	3	4	20/1		0.36		R	CATWALK SR
CATWALK SL	R			0.36	20/1	5	6	20/1			0.20	M	SMOKE HATCHES
CATWALK SL	R	0.36			20/1	7	8	20/1	0.36			R	CATWALK FRONT OF STAGE
DIMMER ROOM, LEDGE	R		0.72		20/1	9	10	20/1		0.36		R	STAGE
DRESSING STATION CONTROLS	M			0.20	20/1	11	12	20/1			0.36	R	STAGE, LIGHT LOCK
CATWALK FRONT OF STAGE	R	0.36			20/1	13	14	20/1	0.36			R	STAGE, STORAGE
EXTERIOR RECEPTACLES	R		0.54		20/1	15	16	20/1		0.36		R	STAGE, STORAGE
AUDITORIUM PROJECTION SCREEN	M			0.50	20/1	17	18	20/1			0.36	R	STAGE, STORAGE
DRESSING ROOM STATION	R	1.20			20/1	19	20	20/1	0.36			R	STAGE, CIRCULATION
DRESSING ROOM STATION	R		1.20		20/1	21	22	20/1		0.36		R	STAGE, CIRCULATION
DRESSING ROOM STATION	R			1.20	20/1	23	24	20/1			1.08	R	LIGHT LOCK, CIRCULATION, SET PREP
DRESSING ROOM STATION	R	1.20			20/1	25	26	20/1	0.90			R	CIRCULATION, CHANGING, DRESSING
DRESSING ROOM STATION	R		1.20		20/1	27	28	20/1		0.90		R	CIRCULATION, CHANGING, DRESSING
DRESSING ROOM STATION	R			1.20	20/1	29	30	20/1			0.90	R	CIRCULATION, CHANGING, DRESSING
DRESSING ROOM STATION	R	1.20			20/1	31	32	20/1					SPARE
DRESSING ROOM STATION	R		1.20		20/1	33	34	20/1					SPARE
DRESSING ROOM STATION	R			1.20	20/1	35	36	20/1					SPARE
DRESSING ROOM STATION	R	1.20			20/1	37	38	20/1					SPARE
DRESSING ROOM STATION	R		1.20		20/1	39	40	20/1					SPARE
DRESSING ROOM STATION	R			1.20	20/1	41	42	20/1					SPARE
		6.60	6.60	5.86					2.34	2.34	2.90		

DEMAND LOAD SUMMARY	CONN. KVA	DEMAND FACTOR	DEMAND KVA
TYPE "M": NON-CONTINUOUS / MISC. LOADS	0.90	100%	0.90
TYPE "L": LIGHTING / CONTINUOUS LOADS	0.00	125%	0.00
TYPE "R": RECEPTACLES (FIRST 10KVA)	10.00	100%	10.00
TYPE "R": RECEPTACLES (OVER 10KVA)	15.74	50%	7.87
TYPE "H": HVAC / MECHANICAL LOADS	0.00	100%	0.00
TOTALS:	26.64		18.77

PHASE A: 8.94 **KVA**
PHASE B: 8.94 **KVA**
PHASE C: 8.76 **KVA**

74.50 **MAX AMPS / PHASE**

PANEL LF

VOLTS: 120 / 208
PHASE: 3 PH
WIRE: 4 W
BUSSING: 100A
POLES: 42P

MAIN BRKR: MLO
FEEDER: SEE SINGLE LINE
CONDUIT: SEE SINGLE LINE
MOUNTED: FLUSH
AIC RATING: SERIES

LOAD DESCRIPTION	TYPE	A	B	C	BRKR.	CKT.	CKT.	BRKR.	A	B	C	TYPE	LOAD DESCRIPTION
ROOF	R	0.36			20/1	1	2	20/1	0.36			R	PRACTICE ROOM
A/V RACK - CHORAL RM	M		0.75		20/1	3	4	20/1		0.36		R	PRACTICE ROOM
A/V RACK - CHORAL RM	M			0.75	20/1	5	6	20/1			0.90	R	STORAGE, THEATRE ARTS
MEN'S, WOMEN'S, CIRCULATION	R	0.54			20/1	7	8	20/1	0.72			R	SHARED OFFICE
SPARE					20/1	9	10	20/1		0.75		R	THEATRE ARTS DISPLAY
FLOOR POCKETS - CHORAL	R			0.72	20/1	11	12	20/1					
FLOOR POCKETS - CHORAL	R	0.72			20/1	13	14	20/1	0.72			R	THEATRE ARTS
CHORAL	R		0.36		20/1	15	16	20/1		0.72		R	THEATRE ARTS
CHORAL	R			0.36	20/1	17	18	20/1			0.72	R	THEATRE ARTS
CHORAL	R	0.36			20/1	19	20	20/1	0.72			R	THEATRE ARTS
CHORAL DISPLAY	M		0.75		20/1	21	22	20/1		0.72		R	THEATRE ARTS
CHORAL	R			0.36	20/1	23	24	20/1			0.72	R	THEATRE ARTS
SPARE					20/1	25	26	20/1	0.72			R	THEATRE ARTS
SPARE					20/1	27	28	20/1					SPARE
SPARE					20/1	29	30	20/1					SPARE
SPARE					20/1	31	32	20/1					SPARE
SPARE					20/1	33	34	20/1					SPARE
SPARE					20/1	35	36	20/1					SPARE
SPARE					20/1	37	38	20/1					SPARE
SPARE					20/1	39	40	20/1					SPARE
SPARE					20/1	41	42	20/1					SPARE
		1.98	1.86	2.19					3.24	2.55	2.34		

DEMAND LOAD SUMMARY	CONN. KVA	DEMAND FACTOR	DEMAND KVA
TYPE "M": NON-CONTINUOUS / MISC. LOADS	2.25	100%	2.25
TYPE "L": LIGHTING / CONTINUOUS LOADS	0.00	125%	0.00
TYPE "R": RECEPTACLES (FIRST 10KVA)	10.00	100%	10.00
TYPE "R": RECEPTACLES (OVER 10KVA)	1.91	50%	0.96
TYPE "H": HVAC / MECHANICAL LOADS	0.00	100%	0.00
TOTALS:	14.16		13.21

PHASE A: 5.22 **KVA**
PHASE B: 4.41 **KVA**
PHASE C: 4.53 **KVA**

43.50 **MAX AMPS / PHASE**

PANEL LC

VOLTS: 120 / 208 V
PHASE: 3 PH
WIRE: 4 W
BUSSING: 225A
AIC RATING: SERIES

NOTE: MAIN BREAKER LUGS CAPABLE OF LANDING 250MCM CONDUCTORS

MAIN BRKR: 225A3P
MAIN METER: CT Provisions Only
FEEDER: SEE SINGLE LINE
CONDUIT: SEE SINGLE LINE
MOUNTED: SURFACE

LOAD DESCRIPTION	TYPE	A	B	C	BRKR.	CKT.	CKT.	BRKR.	A	B	C	TYPE	LOAD DESCRIPTION
MOTOR OPERATED PARTITION	M	1.00			20/1	1	2	20/1	0.36			R	CLASSROOM
SPARE					20/1	3	4	20/1		0.36		R	CLASSROOM
CLASSROOM	R			0.36	20/1	5	6	20/1			0.36	R	CLASSROOM
CLASSROOM	R	0.36			20/1	7	8	20/1	0.36			R	EXTERIOR
CLASSROOM	R		0.54		20/1	9	10	20/1		0.40		M	FAEP-CTE
CLASSROOM	R			0.36	20/1	11	12	20/1			0.36	R	CLASSROOM
HAND DRYER - CONSTRUCTION LAB	R	1.50			20/1	13	14	20/1	0.50			M	IDF-CTE
SPARE					20/1	15	16	20/1		0.50		M	IDF-CTE
COILING DOOR - CONSTRUCTION LAB	M			1.20	20/1	17	18	30/2			2.79	M	DUST COLLECTOR - CONSTRUCTION LAB
SPARE					20/1	19	20		2.79			M	
SPARE					20/1	21	22	20/1					SPARE
SPARE					20/1	23	24	20/1					SPARE
	M	7.50				25	26						
PANEL LD	M		8.50		100/3	27	28						SPACE
	M			8.50		29	30						

CT Provisions Only (Plug Load < 25kVA)

ELECTRIC WATER HEATER	H	1.50			20/2	31	32	20/1					SPARE
	H		1.50			33	34	20/1					SPARE
SPARE					20/1	35	36	20/1			0.58	H	LH-L, LH-2
SPARE					20/1	37	38	20/1	1.77			H	FURNACE FAN F-1
CU-1	H		3.34		40/2	39	40	20/1					SPARE
	H			3.34		41	42	20/1					SPARE

CT Provisions Only (Lighting)

SPARE					20/1	43	44	20/1	0.75			L	INVERTER CTE
SPARE					20/1	45	46	20/1					SPARE
SPARE					20/1	47	48	20/1			0.75	L	CTE LIGHTING
SPARE					20/1	49	50	20/1					SPARE
SPARE					20/1	51	52	20/1					SPARE
SPARE					20/1	53	54	20/1					SPARE

CT Provisions Only (HVAC)

		11.86	13.88	13.76					6.53	1.26	4.84		

DEMAND LOAD SUMMARY	CONN. KVA	DEMAND FACTOR	DEMAND KVA
TYPE "M": NON-CONTINUOUS / MISC. LOADS	33.68	100%	33.68
TYPE "L": LIGHTING / CONTINUOUS LOADS	1.50	125%	1.88
TYPE "R": RECEPTACLES (FIRST 10KVA)	4.56	100%	4.56
TYPE "R": RECEPTACLES (OVER 10KVA)	0.00	50%	0.00
TYPE "H": HVAC / MECHANICAL LOADS	12.03	100%	12.03
TOTALS:	51.77		52.15

PHASE A: 18.39 **KVA**
PHASE B: 15.14 **KVA**
PHASE C: 18.60 **KVA**

155.00 **MAX AMPS / PHASE**

ENCLOSURE HEIGHT: **72" MIN.**

QUATTROCCHI KWOK ARCHITECTS
Main Office:
636 Fifth Street, Santa Rosa, CA 95404
Pleasanton Office:
600 Main Street, Suite E,
Pleasanton, CA 94566
(707) 576-0829

O'MAHONY & MYER
ELECTRICAL ENGINEERING and LIGHTING DESIGN
4340 REDWOOD HWY., SUITE 245
SAN RAFAEL, CALIFORNIA 94903
(415) 492-0420/FAX (415) 479-9662
www.ommconsulting.com

REGISTERED PROFESSIONAL ENGINEER PAUL J. COLEMAN No. 14738 Exp. 6/21 ELECTRICAL STATE OF CALIFORNIA

FREEDOM HIGH SCHOOL

PERFORMING ARTS AND CTE FACILITIES

1050 NEROLY RD
OAKLEY, CA 94561

LIBERTY UNION HIGH SCHOOL DISTRICT

1	DSA	2019

ARCH PROJECT NO: 1739.00
DRAWN BY: TV/LN/ME
DRAWING SCALE:
PTN: 61721-0068

BID SET

JUNE 28, 2019

SHEET TITLE

PANEL SCHEDULES

SHEET NUMBER

E-6.2

PANEL PR

VOLTS: 120 / 208
PHASE: 3 PH
WIRE: 4 W
BUSSING: 100A
POLES: 30P

ALL B
BRADDYS
TYPE HAMC

MAIN BRKR: MLO
FEEDER: SEE SINGLE LINE
CONDUIT: SEE SINGLE LINE
MOUNTED: SURFACE
AIC RATING: SERIES

LOAD DESCRIPTION	TYPE	A	B	C	BRKR.	CKT.	CKT.	BRKR.	A	B	C	TYPE	LOAD DESCRIPTION
DRAPERY MOTOR	M	1.20			20/1	1	2	20/1	1.20			M	DRAPERY MOTOR
DRAPERY MOTOR	M		1.20		20/1	3	4	20/1		1.20		M	DRAPERY MOTOR
DRAPERY MOTOR	M			1.20	20/1	5	6	20/1			1.20	M	DRAPERY MOTOR
SPARE					20/1	7	8	20/1	1.20			M	DRAPERY MOTOR
SPARE					20/1	9	10	20/1		1.20		M	DRAPERY MOTOR
MOTORIZED CURTAIN	M			1.20	20/1	11	12	20/1					SPARE
	M	1.20				13	14		1.20			M	
BATTEN HOIST MOTOR	M		1.20		20/3	15	16	20/3		1.20		M	BATTEN HOIST MOTOR
	M			1.20		17	18				1.20	M	
SPARE					20/1	19	20	20/1					SPARE
SPARE					20/1	21	22	20/1					SPARE
SPARE					20/1	23	24	20/1					SPARE
SPARE					20/1	25	26	20/1					SPARE
SPARE					20/1	27	28	20/1					SPARE
SPARE					20/1	29	30	20/1					SPARE
						31	32						
						33	34						
						35	36						
						37	38						
						39	40						
						41	42						
		2.40	2.40	3.60					3.60	3.60	2.40		

DEMAND LOAD SUMMARY	CONN. KVA	DEMAND FACTOR	DEMAND KVA
TYPE "M": NON-CONTINUOUS / MISC. LOADS	18.00	100%	18.00
TYPE "L": LIGHTING / CONTINUOUS LOADS	0.00	125%	0.00
TYPE "R": RECEPTACLES (FIRST 10KVA)	0.00	100%	0.00
TYPE "R": RECEPTACLES (OVER 10KVA)	0.00	50%	0.00
TYPE "H": HVAC / MECHANICAL LOADS	0.00	100%	0.00
TOTALS:	18.00		18.00

PHASE A: 6.00 **KVA**
PHASE B: 6.00 **KVA**
PHASE C: 6.00 **KVA**

50.00 **MAX AMPS / PHASE**

PANEL LG

VOLTS: 120 / 208
PHASE: 3 PH
WIRE: 4 W
BUSSING: 100A
POLES: 42P

MAIN BRKR: MLO
FEEDER: SEE SINGLE LINE
CONDUIT: SEE SINGLE LINE
MOUNTED: SURFACE
AIC RATING: SERIES

LOAD DESCRIPTION	TYPE	A	B	C	BRKR.	CKT.	CKT.	BRKR.	A	B	C	TYPE	LOAD DESCRIPTION
CHANGING REST ROOM	R	1.00			20/1	1	2	20/1	0.36			R	SET PREP DISPLAY
CHANGING REST ROOM	R		1.00		20/1	3	4	20/1		0.72		R	DRESSING RM DISPLAYS
STAFF REST ROOM	R			1.00	20/1	5	6	20/1			0.72	R	SET PREP, STORAGE
LOBBY DESK	R	0.36			20/1	7	8	20/1	0.72			R	SET PREP, STORAGE
LOBBY DESK	R		0.36		20/1	9	10	20/1		0.72		R	SET PREP, STORAGE
LOBBY	R			0.54	20/1	11	12	20/1			0.72	R	STORAGE, STUDENT COMMONS
TICKET COUNTER POS	R	0.54			20/1	13	14	20/1	0.72			R	STORAGE, STUDENT COMMONS
TICKET COUNTER POS	R		0.36		20/1	15	16	20/1		0.75		R	LOBBY DISPLAY
CONCESSIONS	R			1.00	20/1	17	18	20/1			0.75	R	LOBBY DISPLAY
CONCESSIONS	R	1.00			20/1	19	20	20/1	0.72			R	LOBBY
CONCESSIONS	R		1.00		20/1	21	22	20/1		0.54		R	CONCESSIONS
CONCESSIONS	R			1.00	20/1	23	24	20/1			0.75	R	CONCESSIONS DISPLAY
DIVISION 23 GATEWAY	M	0.25			20/1	25	26	20/1	0.05			L	LTG - ELEVATOR PIT
CLERESTORY MECHOSHADES	M		0.60		20/1	27	28	20/1		0.05		L	LTG - ELEVATOR MACHINE RM
SPARE					20/1	29	30	20/1			0.18	M	REC - ELEVATOR PIT RECEPTACLE
SPARE					20/1	31	32	20/1	0.18			M	REC - ELEVATOR MACHINE RM RECEPTACLE
SPARE					20/1	33	34	20/1					SPARE
SPARE					20/1	35	36	20/1					SPARE
SPARE					20/1	37	38	20/1					SPARE
SPARE					20/1	39	40	20/1					SPARE
SPARE					20/1	41	42	20/1					SPARE
		3.15	3.32	3.54					2.75	2.78	3.12		

DEMAND LOAD SUMMARY	CONN. KVA	DEMAND FACTOR	DEMAND KVA
TYPE "M": NON-CONTINUOUS / MISC. LOADS	1.21	100%	1.21
TYPE "L": LIGHTING / CONTINUOUS LOADS	0.10	125%	0.13
TYPE "R": RECEPTACLES (FIRST 10KVA)	10.00	100%	10.00
TYPE "R": RECEPTACLES (OVER 10KVA)	7.35	50%	3.68
TYPE "H": HVAC / MECHANICAL LOADS	0.00	100%	0.00
TOTALS:	18.66		15.01

PHASE A: 5.90 **KVA**
PHASE B: 6.10 **KVA**
PHASE C: 6.66 **KVA**

55.50 **MAX AMPS / PHASE**

PANEL LM

VOLTS: 120 / 208
PHASE: 3 PH
WIRE: 4 W
BUSSING: 225A
POLES: 42P

MAIN BRKR: MLO
FEEDER: SEE SINGLE LINE
CONDUIT: SEE SINGLE LINE
MOUNTED: SURFACE
AIC RATING: SERIES

LOAD DESCRIPTION	TYPE	A	B	C	BRKR.	CKT.	CKT.	BRKR.	A	B	C	TYPE	LOAD DESCRIPTION
FC-4	H	0.20			15/2	1	2	15/2	1.40			H	HP-2
	H		0.20			3	4			1.40		H	
EWH GIRLS W/R	H			2.00	30/1	5	6	20/1			0.76	H	EF-1
EWH STAFF W/R	H	2.00			30/1	7	8	20/1	0.76			H	EF-2
FC-3	H		0.20		15/2	9	10	20/1		0.60		H	EF-3,4,5,6,7
	H			0.20		11	12	20/1			0.50	M	OVERHEAD COILING DOOR
FC-5	H	0.20			15/2	13	14	20/1	0.50			M	OVERHEAD COILING DOOR
	H		0.20			15	16	20/1		0.50		M	OVERHEAD COILING DOOR
FC-1	H			0.20	15/2	17	18	20/1			1.50	M	HANDICAP LIFT
	H	0.20				19	20	20/1	1.50			M	ELECTRIC HAND-DRYER
HP-6	H		1.40		15/2	21	22	20/1		1.50		M	HANDICAP LIFT
	H			1.40		23	24	20/1			1.50	M	ELECTRIC HAND-DRYER
ELECTRIC HAND-DRYER MEN'S	M	1.50			20/1	25	26	20/1	1.50			M	ELECTRIC HAND-DRYER
ELECTRIC HAND-DRYER MEN'S	M		1.50		20/1	27	28	20/1					SPARE
ELECTRIC HAND-DRYER WOMEN'S	M			1.50	20/1	29	30	20/1			0.80	M	ELECTRIC WATER COOLER
SPARE					20/1	31	32	20/1	0.80			M	ELECTRIC WATER COOLER
EWH BOYS W/R	H		2.00		30/1	33	34	20/2		1.50		M	ELECTRIC WATER HEATER
ELECTRIC HAND-DRYER WOMEN'S	M			1.50	20/1	35	36				1.50	M	
					20/1	37	38	20/2	1.50			H	ELECTRIC WATER HEATER
FC-7	H		0.20		15/2	39	40			1.50		H	
	H			0.20		41	42	20/1					SPARE
		4.10	5.70	7.00					7.96	7.00	6.56		

DEMAND LOAD SUMMARY	CONN. KVA	DEMAND FACTOR	DEMAND KVA
TYPE "M": NON-CONTINUOUS / MISC. LOADS	19.60	100%	19.60
TYPE "L": LIGHTING / CONTINUOUS LOADS	0.00	125%	0.00
TYPE "R": RECEPTACLES (FIRST 10KVA)	0.00	100%	0.00
TYPE "R": RECEPTACLES (OVER 10KVA)	0.00	50%	0.00
TYPE "H": HVAC / MECHANICAL LOADS	18.72	100%	18.72
TOTALS:	38.32		38.32

PHASE A: 12.06 **KVA**
PHASE B: 12.70 **KVA**
PHASE C: 13.56 **KVA**

113.00 **MAX AMPS / PHASE**

QUATTROCCHI KWOK
ARCHITECTS
Main Office:
636 Fifth Street, Santa Rosa, CA 95404
Pleasanton Office:
600 Main Street, Suite E,
Pleasanton, CA 94566
(707) 576-0829

O'MAHONY & MYER
ELECTRICAL ENGINEERING and LIGHTING DESIGN
4340 REDWOOD HWY., SUITE 245
SAN RAFAEL, CALIFORNIA 94903
(415) 492-0420/FAX (415) 479-9602
www.ommconsulting.com

PAUL J. COLEMAN — No. 14738 Exp. 6/21 — REGISTERED PROFESSIONAL ENGINEER — ELECTRICAL — STATE OF CALIFORNIA

FREEDOM HIGH SCHOOL

PERFORMING ARTS AND CTE FACILITIES

1050 NEROLY RD
OAKLEY, CA 94561

LIBERTY UNION HIGH SCHOOL DISTRICT

1	DSA	2019

ARCH PROJECT NO: 1739.00
DRAWN BY: TV/LN/ME
DRAWING SCALE:
PTN: 61721-0068

BID SET

JUNE 28, 2019

SHEET TITLE

PANEL SCHEDULES

SHEET NUMBER

E-6.3

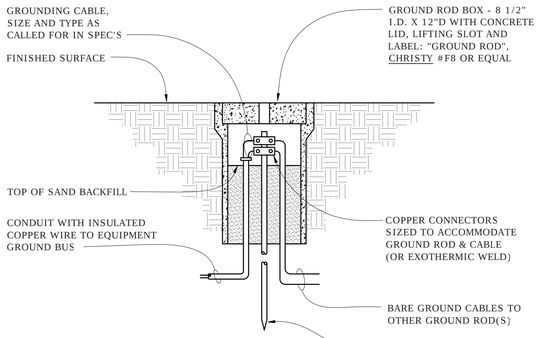

GROUND ROD INSTALLATION

SCALE: NONE

5 E-7.1

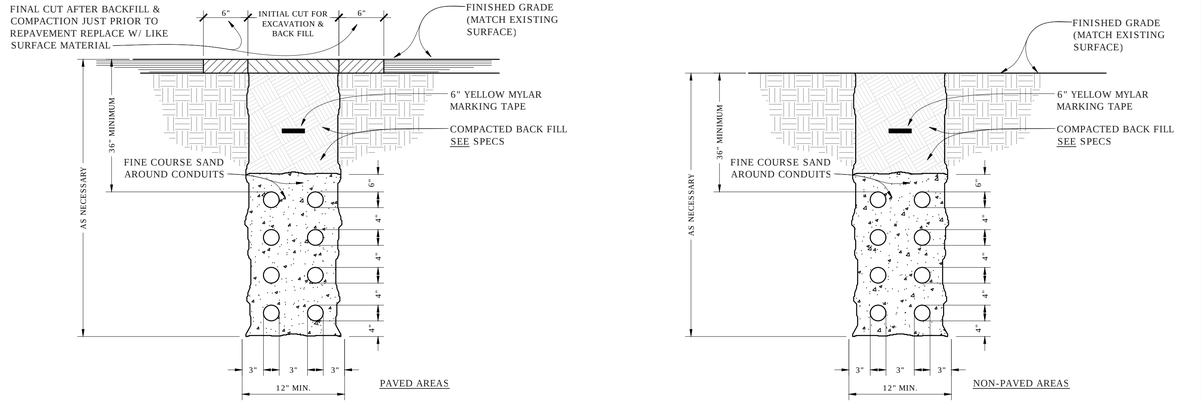

TYPICAL TRENCH SECTIONS

SCALE: NONE

1 E-7.1

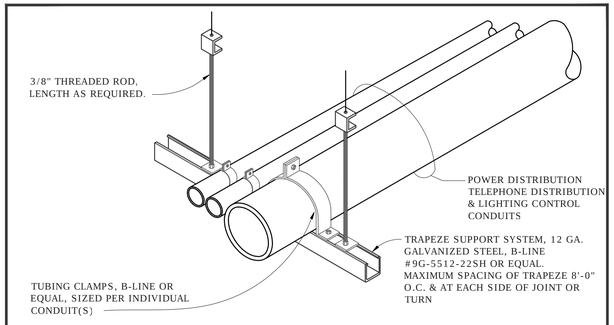

NOTE:
1. AFTER COMPLETION OF INSTALLATION, ENTIRE ASSEMBLY IS TO BE PAINTED AS DIRECTED BY THE ARCHITECT WITH MIN. 2 COATS EPOXY ENAMEL PAINTS.
2. CONTRACTOR TO PROVIDE SEISMIC BRACING PER ASCE 7 13.3 (SEE 6/E-7.2) FOR CONDUIT RACKS MEETING ANY OF THE FOLLOWING CONDITIONS:
   a. COMBINED CONDUIT WEIGHT PER RACK IS 10LB/FT OR MORE
   b. HANGER LENGTH EXCEEDS 12" FROM SUPPORT POINT TO SUPPORTING STRUCTURE
   c. ANY CONDUIT ON THE RACK EXCEEDS 2.5"

CONDUIT MOUNTING DETAIL

SCALE: NONE

6 E-7.1

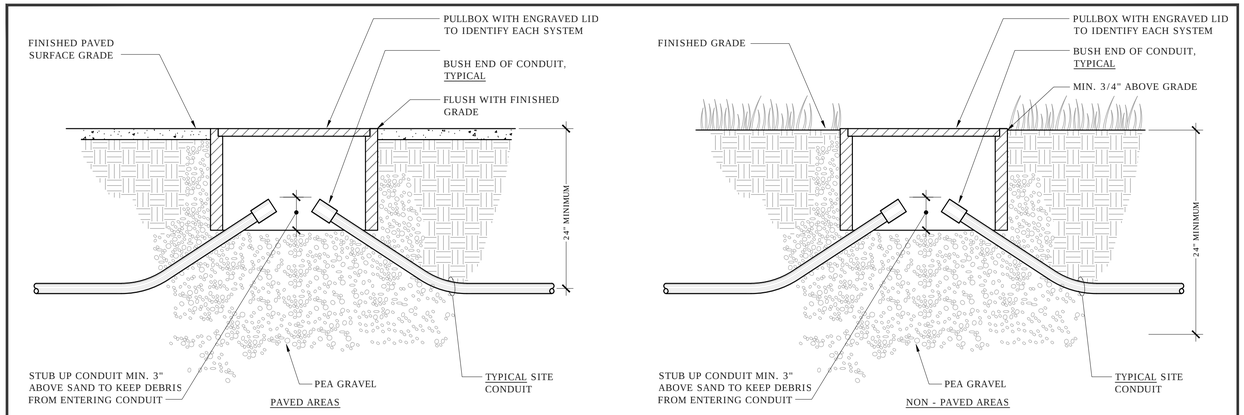

TYPICAL PULLBOX DETAILS

SCALE: NOT TO SCALE

2 E-7.1

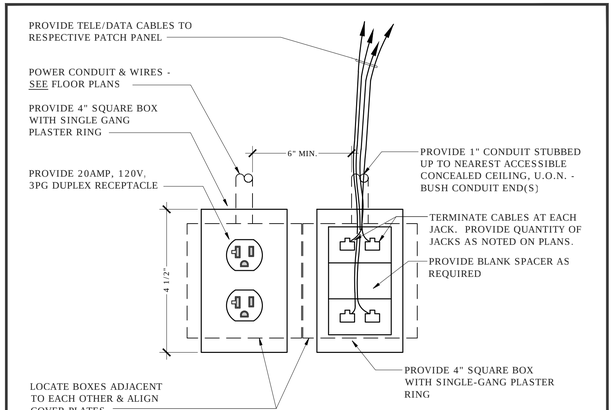

COMBINATION POWER, TELE / DATA OUTLETS (ΦTV)

SCALE: NONE

3 E-7.1

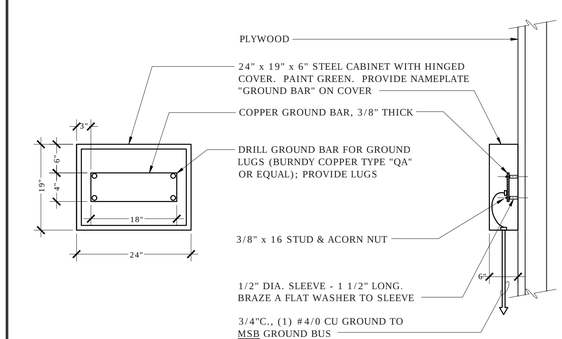

GROUND BAR CABINET

SCALE: NONE

4 E-7.1

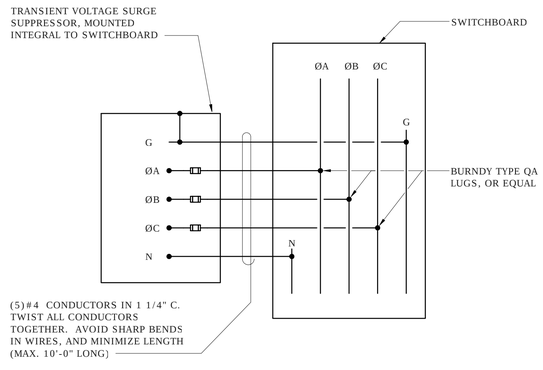

SURGESUPPRESSOR CONNECTION DIAGRAM

SCALE: NONE
FILE: L:\DETAILS\POWER\SURGE\PSURG001 (MOD.)

5 E-7.1

QUATTROCCHI KWOK ARCHITECTS
Main Office:
636 Fifth Street, Santa Rosa, CA 95404
Pleasanton Office:
600 Main Street, Suite E,
Pleasanton, CA 94566
(707) 576-0829

O'MAHONY & MYER
ELECTRICAL ENGINEERING and LIGHTING DESIGN
4340 REDWOOD HWY., SUITE 245
SAN RAFAEL, CALIFORNIA 94903
(415) 492-0420/FAX (415) 479-9602
www.ommconsulting.com

PAUL J. COLEMAN No. 14738 Exp. 6/21 REGISTERED PROFESSIONAL ENGINEER ELECTRICAL STATE OF CALIFORNIA

FREEDOM HIGH SCHOOL

PERFORMING ARTS AND CTE FACILITIES

1050 NEROLY RD
OAKLEY, CA 94561

LIBERTY UNION HIGH SCHOOL DISTRICT

1	DSA	2019

ARCH PROJECT NO: 1739.00
DRAWN BY: TV/LN/ME
DRAWING SCALE:
PTN: 61721-0068

BID SET

JUNE 28, 2019

SHEET TITLE

DETAILS

SHEET NUMBER

E-7.1

NOTES:
1. TRIM ALL EXCESS BRACING CABLES FOR A FINISHED AND TRIM FINAL INSTALLATION.

2. CONTRACTOR SHALL COORDINATE PROVISION OF STRUCTURAL BLOCKING IN WALLS FOR SWAY BRACING WITH GENERAL CONTRACTOR, PRIOR TO INSTALLATION OF SHEET ROCK; 600S162-43 METAL STUD BLOCKING SHALL BE SECURED USING MINIMUM TWO (2)#8 SMS AT EACH VERTICAL WALL STUD; NOTCH FLANGES OF BLOCKING AT EACH STUD; S.S.D. FOR TYPICAL ATTACHMENT DETAILS.

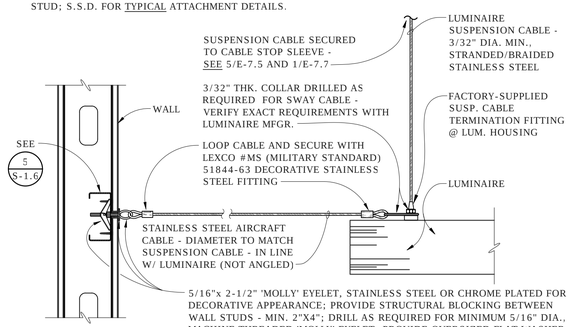

SWAY BRACE DETAIL AT WALL

6 E-7.7

SCALE: NONE
FILE: L:\DETAILS\LIGHT\BRACING\LBRAC006B

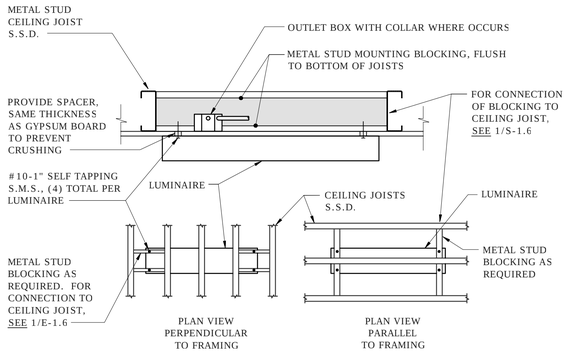

SURFACE MOUNTED LUMINAIRE

7 E-7.7

SCALE: NONE
FILE: L:\LIGHT\SURFACE\LSURF003A

NOTES:
* USE LEXCO #MS (MILITARY STANDARD) 51844-63 COMPRESSION LOOPS TO SECURE ALL STAINLESS STEEL AIRCRAFT SAFETY, HANGER AND SEISMIC BRACING WIRES/CABLES.

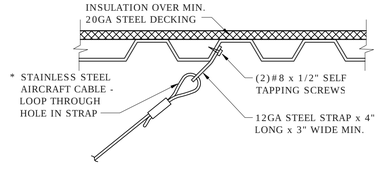

HANGER & BRACING WIRES AT DECKING

8 E-7.7

SCALE: NOT TO SCALE
FILE: L:\DETAILS\LIGHT\BRACING\LBRAC003 (MODIFIED FOR 218054)

8 GA. GALVANIZED STEEL MOUNTING PLATE - 3" x LENGTH AS REQUIRED - SECURE TO DECK WITH MIN. THREE (3)#12 SHEET METAL SCREWS, 1-1/4"L, PER FLUTE *
STEEL NUT - TYPICAL
LOCKWASHER - TYPICAL
FLATWASHER - TYPICAL
OCTAGONAL OUTLET J-BOX - 4"SQ. x 2"D. WITH COVERPLATE DRILLED FOR S.O. CORD EXIT, WITH RUBBER GROMMET *
CEILING DECK - SEE STRUCTURAL DRAWINGS
LUMINAIRE SUSPENSION CABLE STOP SLEEVE, SUPPLIED BY LUMINAIRE - TYPICAL
CONDUIT TO OTHER LUMINAIRES OR HOMERUN - TYP.
STAINLESS STEEL AIRCRAFT CABLE - DIAMETER TO MATCH SUSPENSION CABLE. SEE 8/E-7.2 FOR CONNECTION TO STRUCTURE. PROVIDE AND INSTALL ONLY AT LOCATIONS WHERE LUMINAIRE IS NOT FREE TO SWAY 45 DEGREES WITHOUT HITTING OBSTRUCTIONS
DECORATIVE CEILING CANOPY WITH CORD FEED OPENING, SUPPLIED WITH LUMINAIRE, PAINTED TO MATCH CEILING, AS DIRECTED BY ARCHITECT
POWER CORD SUPPLIED WITH LUMINAIRE, WITH STRAIN RELIEF
LOOP CABLE AND SECURE WITH LEXCO #MS (MILITARY STANDARD) 51844-63 DECORATIVE STAINLESS STEEL FITTING
CLEAR CABLE TIE
FACTORY SUPPLIED SUSP. CABLE TERMINATION FITTING @ LUMINAIRE HOUSING
3/32" THICK COLLAR DRILLED AS REQUIRED FOR SWAY CABLE - VERIFY EXACT REQUIREMENTS WITH LUMINAIRE MFGR.
* SIZE MOUNTING PLATE AS REQUIRED, AFTER FABRICATION AND INSTALLATION, PROPERLY PREPARE & PAINT ALL MOUNTING PLATES, J-BOXES, CONDUIT & MISC. HARDWARE TO MATCH ADJACENT SURFACES, AS DIRECTED BY THE ARCHITECT
LUMINAIRE - SEE LUMINAIRE SCHEDULE

LUMINAIRE AT EXPOSED METAL CEILING DECK

4 E-7.7

SCALE: NONE
FILE: (NEW FOR 218054)

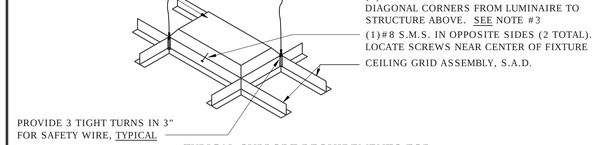

TYPICAL SUPPORT REQUIREMENTS FOR RECESSED LUMINAIRES 2'x4' OR SMALLER, AND NOT GREATER THAN 56 LBS.

NOTES:
1. FOR LUMINAIRES LARGER THAN 2'x4', AND/OR GREATER THAN 56 LBS., REFER TO ELECTRICAL EQUIPMENT ANCHORAGE NOTES ON SHEET E-0.1, FOR ADDITIONAL REQUIREMENTS AND COORDINATE WITH ARCHITECTURAL CEILING DETAILS AND NOTES.
2. SEE ARCHITECTURAL DRAWINGS FOR CEILING TYPES.
3. SEE DETAILS 2/E-7.7 AND 7/A-10.4, FOR ADDITIONAL REQUIREMENTS.

RECESSED OR SURFACE MOUNTED LUMINAIRE SUPPORT

5 E-7.7

SCALE: NOT TO SCALE
FILE: L:\DETAILS\LIGHT\RECESSED-DSA\LRECE-DSA001

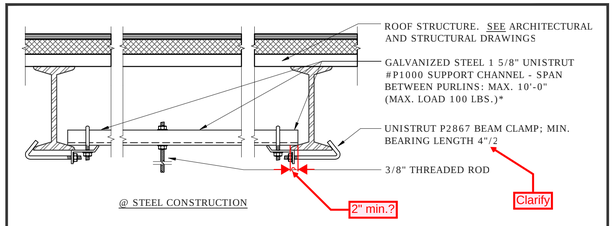

NOTES:
* UNISTRUT BLOCKING, IF AND WHERE REQUIRED, SHALL BE PROVIDED AND INSTALLED BY CONTRACTOR, SECURED TO STRUCTURAL MEMBERS AS DETAILED, OR AS DIRECTED BY THE STRUCTURAL ENGINEER.

THREADED ROD CONNECTION TO STRUCTURE

1 E-7.7

SCALE: NONE
FILE: L:\DETAILS\LIGHT\BRACING\LBRAC001A

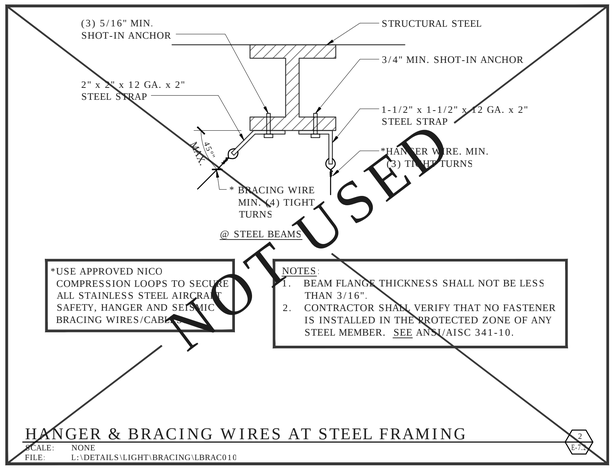

*USE APPROVED NICO COMPRESSION LOOPS TO SECURE ALL STAINLESS STEEL AIRCRAFT SAFETY, HANGER AND SEISMIC BRACING WIRES/CABLES.

NOTES:
1. BEAM FLANGE THICKNESS SHALL NOT BE LESS THAN 3/16".
2. CONTRACTOR SHALL VERIFY THAT NO FASTENER IS INSTALLED IN THE PROTECTED ZONE OF ANY STEEL MEMBER. SEE ANSI/AISC 341-10.

NOT USED

HANGER & BRACING WIRES AT STEEL FRAMING

2 E-7.7

SCALE: NONE
FILE: L:\DETAILS\LIGHT\BRACING\LBRAC010

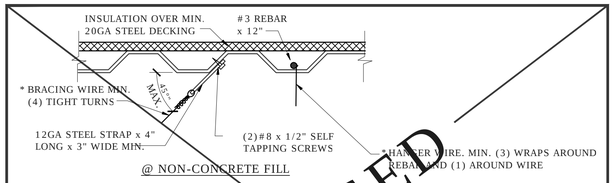

NOTES:
* USE LEXCO #MS (MILITARY STANDARD) 51844-63 COMPRESSION LOOPS TO SECURE ALL STAINLESS STEEL AIRCRAFT SAFETY, HANGER AND SEISMIC BRACING WIRES/CABLES.

NOT USED

HANGER & BRACING WIRES AT DECKING

3 E-7.7

SCALE: NONE
FILE: L:\DETAILS\LIGHT\BRACING\LBRACING003 (MODIFIED FOR 218054)

QUATTROCCHI KWOK ARCHITECTS
Main Office:
636 Fifth Street, Santa Rosa, CA 95404
Pleasanton Office:
600 Main Street, Suite E,
Pleasanton, CA 94566
(707) 576-0829

O'MAHONY & MYER
ELECTRICAL ENGINEERING and LIGHTING DESIGN
4340 REDWOOD HWY., SUITE 245
SAN RAFAEL, CALIFORNIA 94903
(415) 492-0420/FAX (415) 479-9602
www.ommconsulting.com

PAUL J. COLEMAN No.14738 Exp. 6/21 REGISTERED PROFESSIONAL ENGINEER ELECTRICAL STATE OF CALIFORNIA

FREEDOM HIGH SCHOOL

PERFORMING ARTS AND CTE FACILITIES

1050 NEROLY RD
OAKLEY, CA 94561

LIBERTY UNION HIGH SCHOOL DISTRICT

	DSA	2019

ARCH PROJECT NO: 1739.00
DRAWN BY: TV/LN/ME
DRAWING SCALE:
PTN: 61721-0068

BID SET

JUNE 28, 2019

SHEET TITLE

DETAILS

SHEET NUMBER

E-7.2

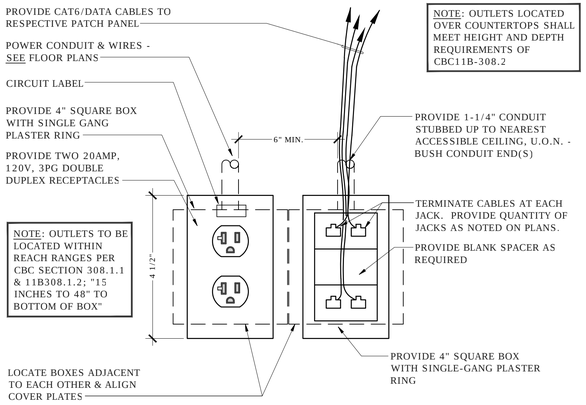

COMBINATION POWER, TELE / DATA OUTLETS

7 E-7.3

SCALE: NONE
FILE: L:\DETAILS\POWER\PDWIRE\PPDWI001 (MOD.)

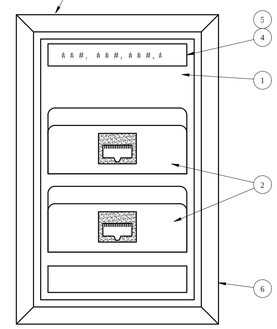

NOTE: EXACT FACEPLATE CONFIGURATION VARIES FOR OUTLET TYPES - WALL, FLUSH FLOOR, CONCEALED SERVICE

NUMBERED NOTES

1. SINGLE-GANG QUADPLEX MODULAR FACEPLATE WITH ANGLED EXIT.
2. 8 PIN 8 POS, T568B DATA JACK, COLORED BLUE, EXCEPT AT MEDIA/AV LOCATIONS COLORED YELLOW.
3. NOT USED.
4. PANDUIT, EFPL-1, 1.80 X 0.375 INCH. WHITE, POLYESTER LABEL. LABELS SHALL HAVE CAPACITY FOR 2 COLUMNS FOR LASER PRINTERS.
5. PROVIDE LABELING AND FACEPLATE IDENTIFICATION AS NOTED IN THE SPECIFICATIONS.
6. SEE FLOOR PLANS FOR QUANTITY & TYPE OF JACKS IN EACH LOCATION.

TYPICAL TELECOM FACEPLATE DETAIL (▼)

4 E7.3

SCALE: NONE (MODIFIED)

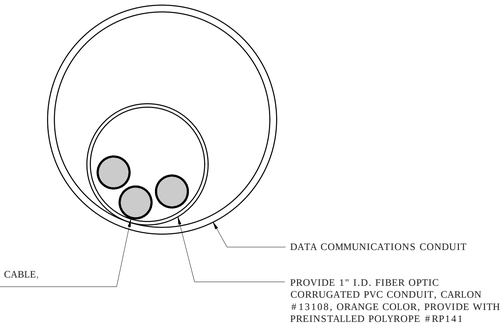

DATA CONDUIT AND CABLE SECTION

1 E-7.3

SCALE: NONE

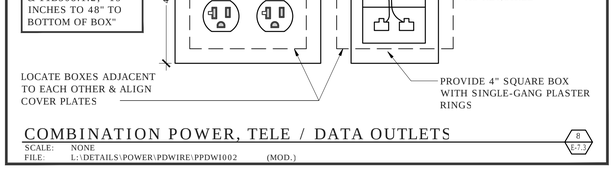

COMBINATION POWER, TELE / DATA OUTLETS

8 E-7.3

SCALE: NONE
FILE: L:\DETAILS\POWER\PDWIRE\PPDWI002 (MOD.)

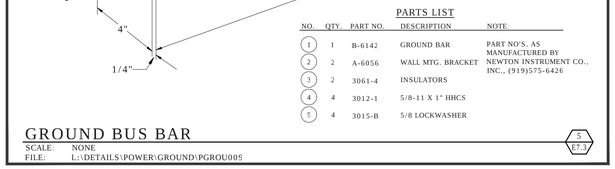

PARTS LIST

NO.	QTY.	PART NO.	DESCRIPTION	NOTE:
1	1	B-6142	GROUND BAR	PART NO'S. AS MANUFACTURED BY NEWTON INSTRUMENT CO., INC., (919)575-6426
2	2	A-6056	WALL MTG. BRACKET	
3	2	3061-4	INSULATORS	
4	4	3012-1	5/8-11 X 1" HHCS	
5	4	3015-B	5/8 LOCKWASHER	

GROUND BUS BAR

5 E-7.3

SCALE: NONE
FILE: L:\DETAILS\POWER\GROUND\PGROU009

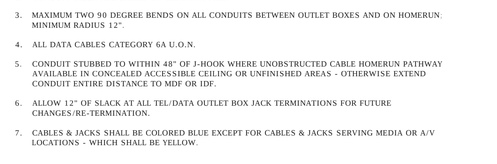

NOTES.

1. PROVIDE A COMPLETE DATA RACEWAY SYSTEM BETWEEN PATCH PANELS AND OUTLETS, U.O.N. EXCEPT PLENUM-RATED CABLES ON J-HOOKS SHALL BE USED FOR CONCEALED ACCESSIBLE CEILING LOCATIONS - AND IN UNFINISHED AREAS.
2. CONDUIT SIZES ARE BASED ON MAXIMUM FILL.
3. MAXIMUM TWO 90 DEGREE BENDS ON ALL CONDUITS BETWEEN OUTLET BOXES AND ON HOMERUN: MINIMUM RADIUS 12".
4. ALL DATA CABLES CATEGORY 6A U.O.N.
5. CONDUIT STUBBED TO WITHIN 48" OF J-HOOK WHERE UNOBSTRUCTED CABLE HOMERUN PATHWAY AVAILABLE IN CONCEALED ACCESSIBLE CEILING OR UNFINISHED AREAS - OTHERWISE EXTEND CONDUIT ENTIRE DISTANCE TO MDF OR IDF.
6. ALLOW 12" OF SLACK AT ALL TEL/DATA OUTLET BOX JACK TERMINATIONS FOR FUTURE CHANGES/RE-TERMINATION.
7. CABLES & JACKS SHALL BE COLORED BLUE EXCEPT FOR CABLES & JACKS SERVING MEDIA OR A/V LOCATIONS - WHICH SHALL BE YELLOW.

TYPICAL TEL/DATA RACEWAY CONFIGURATION

2 E7.3

SCALE: NONE (MODIFIED FOR 215004)

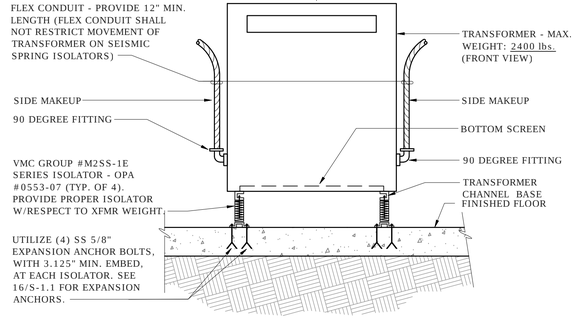

TRANSFORMER MOUNTING DETAIL

6 E-7.3

SCALE: NONE
FILE: L:\DETAILS\POWER\TRANSFORMER\PTRANS005 (MOD.)

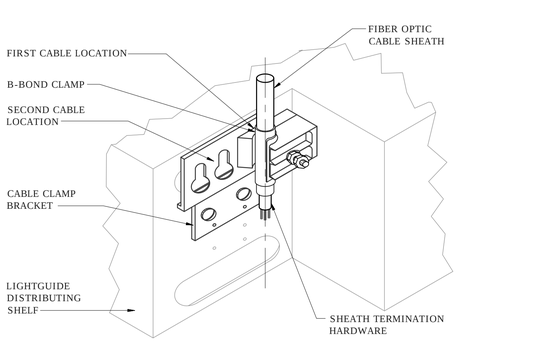

FIBER OPTIC CABLE - SHEATH CLAMP

3 E7.3

SCALE: NONE

QUATTROCCHI KWOK ARCHITECTS
Main Office:
636 Fifth Street, Santa Rosa, CA 95404
Pleasanton Office:
600 Main Street, Suite E,
Pleasanton, CA 94566
(707) 576-0829

O'MAHONY & MYER
ELECTRICAL ENGINEERING and LIGHTING DESIGN
4340 REDWOOD HWY., SUITE 245
SAN RAFAEL, CALIFORNIA 94903
(415) 492-0420/FAX (415) 479-9602
www.ommconsulting.com

REGISTERED PROFESSIONAL ENGINEER PAUL J. COLEMAN No.14738 Exp. 6/21 ELECTRICAL STATE OF CALIFORNIA

FREEDOM HIGH SCHOOL

PERFORMING ARTS AND CTE FACILITIES

1050 NEROLY RD
OAKLEY, CA 94561

LIBERTY UNION HIGH SCHOOL DISTRICT

△	DSA	2019

ARCH PROJECT NO: 1739.00
DRAWN BY: TV/LN/ME
DRAWING SCALE:
PTN: 61721-0068

BID SET

JUNE 28, 2019

SHEET TITLE

DETAILS

SHEET NUMBER

E-7.3

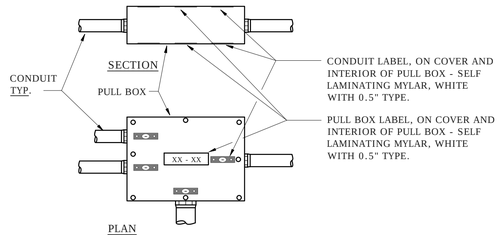

TYPICAL TELECOM PULL BOX LABELING

SCALE: NONE

7 E7.4

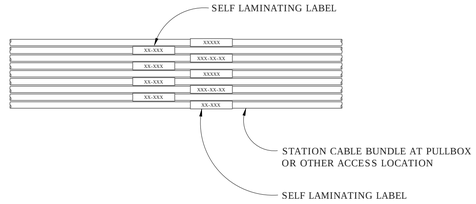

TYPICAL STATION CABLE LABELING

SCALE: NONE

4 E7.4

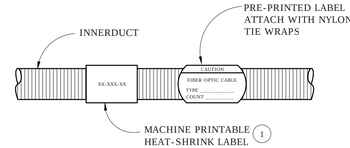

NUMBERED NOTES

1. LABEL LOCATION AT INNER DUCT, LABEL TYPE PANDUIT MMP350-C .75" x 3.5" 316 STAINLESS MACHINE .25" H PRINTING.
2. LABEL LOCATION AT OVERHEAD INNER DUCT W/F.O. CABLE, LABEL TYPE PANDUIT PST-FO PLASTIC. 2" x 3.5" YELLOW, PRE-PRINTED.

TYPICAL INNERDUCT LABELING

SCALE: NONE

1 E7.4

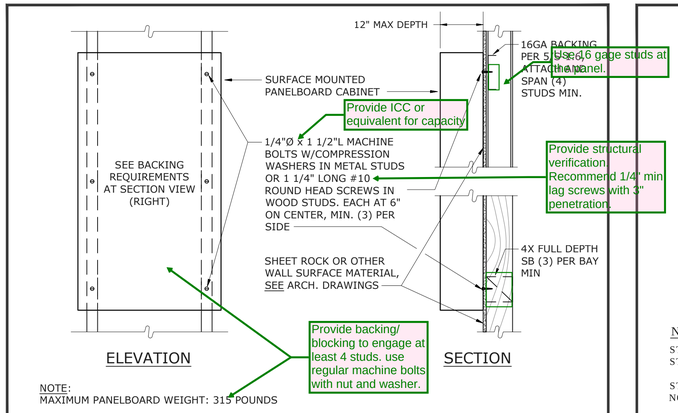

SURFACE PANELBOARD MOUNTING

SCALE: NONE
FILE: L:\DETAILS\POWER\PANEL\PPANE008

8 E7.4

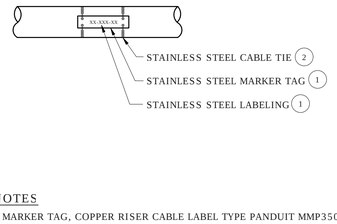

NUMBERED NOTES

STAINLESS STEEL MARKER TAG, COPPER RISER CABLE LABEL TYPE PANDUIT MMP350-C .75" x 3.5" 316 STAINLESS, EMBOSSED .25" H PRINTING.

STAINLESS STEEL CABLE TIE W/ NEOPRENE CUSHION SLEEVE, STRAP STEEL TYPE - PANDUIT MLT65-CP316 NON-MAGNETIC, .18" WITH NO PRINTING.

TYPICAL TELEPHONE TRUNK CABLE LABELING

SCALE: NONE

5 E7.4

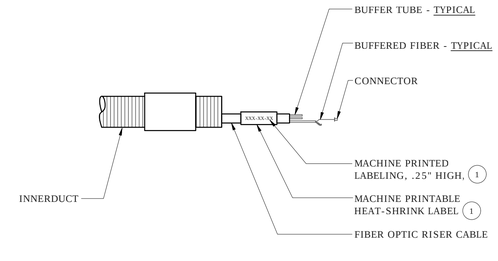

NUMBERED NOTES

1. LABEL LOCATION AT FIBER OPTIC RISER CABLE, LABEL TYPE PANDUIT MMP350-C .75" x 3.5" 316 STAINLESS, MACHINE .25" H PRINTING.

TYPICAL FIBER OPTIC CABLE LABELING

SCALE: NONE

2 E7.4

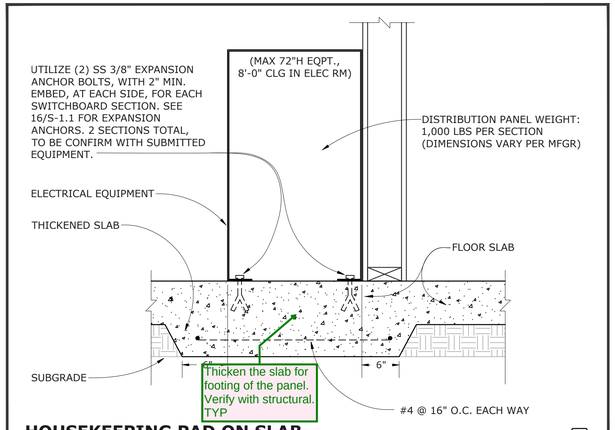

HOUSEKEEPING PAD ON SLAB

SCALE: NONE
FILE: L:\DETAILS\POWER\PADS\PPADS003A (MOD)

9 E7.4

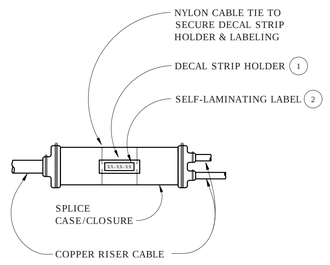

NUMBERED NOTES

1. SPLICE CASE DECAL STRIP HOLDER, LABEL TYPE 3M 5012 BLACK PE STRIP.
2. LOCATE ON SPLICE CASE CLOSURE, LABEL TYPE SELF LAMINATING 3M SCOTCHLITE 5000 SILVER, PRE-PRINTED 1" INDIVIDUAL LETTERING, APPLY DIRECTLY TO DECAL STRIP HOLDER.

TYPICAL SPLICE CASE LABELING

SCALE: NONE

6 E7.4

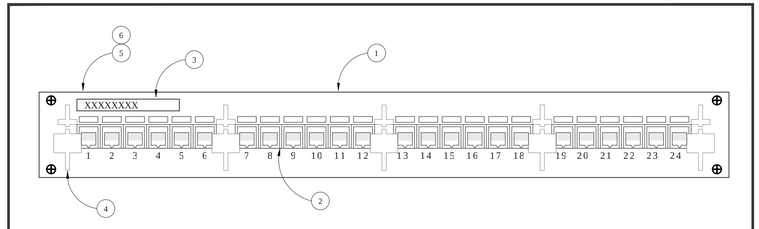

NUMBERED NOTES

1. 2 RU RACK PANEL WHICH SHALL ACCEPT FOUR TILT-OUT INSERT PANELS.
2. INSERT PANEL SHALL ACCEPT SIX T568B 8-PIN 8-POSITION JACKS.
3. IDENTIFICATION LABEL THAT IDENTIFIES RACK AND PATCH PANEL LOCATION.
4. FRONT-MOUNT PANEL WIRE MANAGEMENT HOOKS.
5. PATCH PANEL SHALL BE PANDUIT MINI-COM MODULAR 24 PORT #CPP24WBL, OR 48 PORT EQUIVALENT, APPROVED EQUAL.
6. SEE E-5.2 FOR QUANTITY & TYPE OF PATCH PANELS AT EACH IDF.

TYPICAL COPPER PATCH PANEL

SCALE: NONE

3 E7.4

QUATTROCCHI KWOK ARCHITECTS
Main Office:
636 Fifth Street, Santa Rosa, CA 95404
Pleasanton Office:
600 Main Street, Suite E,
Pleasanton, CA 94566
(707) 576-0829

O'MAHONY & MYER
ELECTRICAL ENGINEERING and LIGHTING DESIGN
4340 REDWOOD HWY., SUITE 245
SAN RAFAEL, CALIFORNIA 94903
(415) 492-0420/FAX (415) 479-9602
www.ommconsulting.com

PAUL J. COLEMAN No. 14738 Exp. 6/21 REGISTERED PROFESSIONAL ENGINEER ELECTRICAL STATE OF CALIFORNIA

FREEDOM HIGH SCHOOL

PERFORMING ARTS AND CTE FACILITIES

1050 NEROLY RD
OAKLEY, CA 94561

LIBERTY UNION HIGH SCHOOL DISTRICT

	DSA	2019

ARCH PROJECT NO: 1739.00
DRAWN BY: TV/LN/ME
DRAWING SCALE:
PTN: 61721-0068

BID SET

JUNE 28, 2019

SHEET TITLE

DETAILS

SHEET NUMBER

E-7.4

* OVERALL 20'-0" OR 13'-8" HEIGHT (LUMINAIRE + POLE) IS LESS THAN 35FT.; THEREFORE D.S.A. REVIEW IS NOT REQUIRED

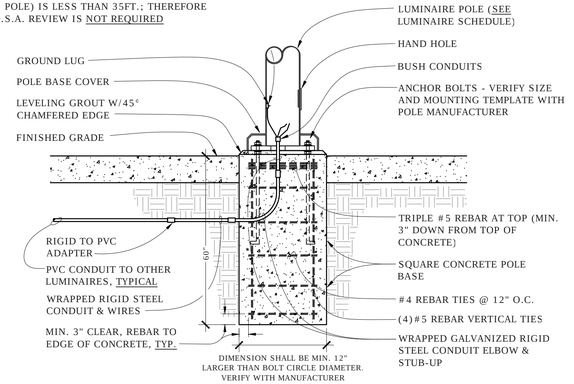

SQUARE POLE BASE IN SIDEWALK OR PAVED AREA

6 / E-7.5

SCALE: NOT TO SCALE
FILE: L:\DETAILS\LIGHT\POLEBASE\LPOLE001A (MODIFIED)

* OVERALL 20'-0" OR 13'-8" HEIGHT IS LESS THAN 35FT; THEREFORE D.S.A. REVIEW IS NOT REQUIRED

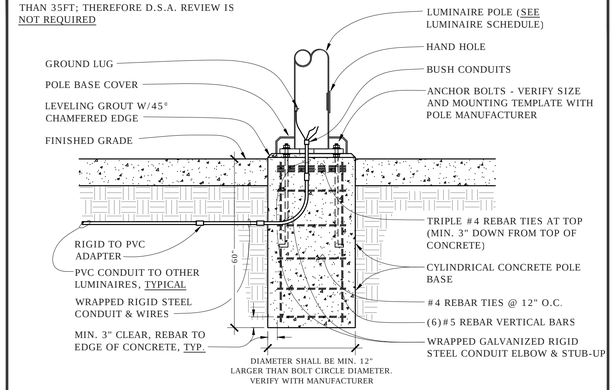

POLE BASE IN SIDEWALK OR PAVED AREA

4 / E-7.5

SCALE: NOT TO SCALE
FILE: L:\DETAILS\LIGHT\POLEBASE\LPOLE001A

* OVERALL 3'-6" HEIGHT IS LESS THAN 35FT.; THEREFORE D.S.A. REVIEW IS NOT REQUIRED

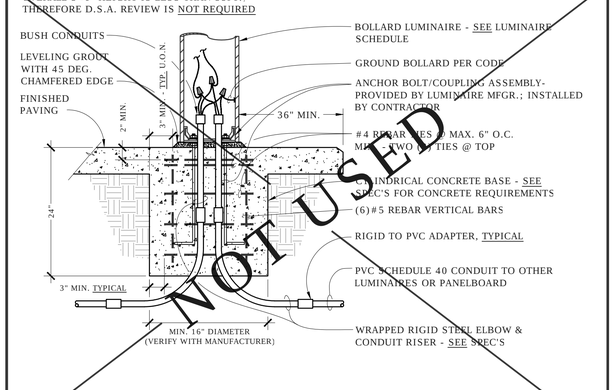

BOLLARD MOUNTING AT NEW CONCRETE SLAB / WALKWAY

1 / E-7.5

SCALE: NONE
FILE: L:\DETAILS\LIGHT\BOLLARD\LBOLL009 (MODIFIED)

NOTES:
1. LUMINAIRE SHALL BE FREE TO SWING 45° FROM THE VERTICAL IN ALL DIRECTIONS WITHOUT HITTING ANY OBSTRUCTIONS.
2. SUPPORT (NON-FEED) DETAIL SIMILAR TO ENLARGED VIEW, EXCEPT NO J-BOX OR CONDUIT.

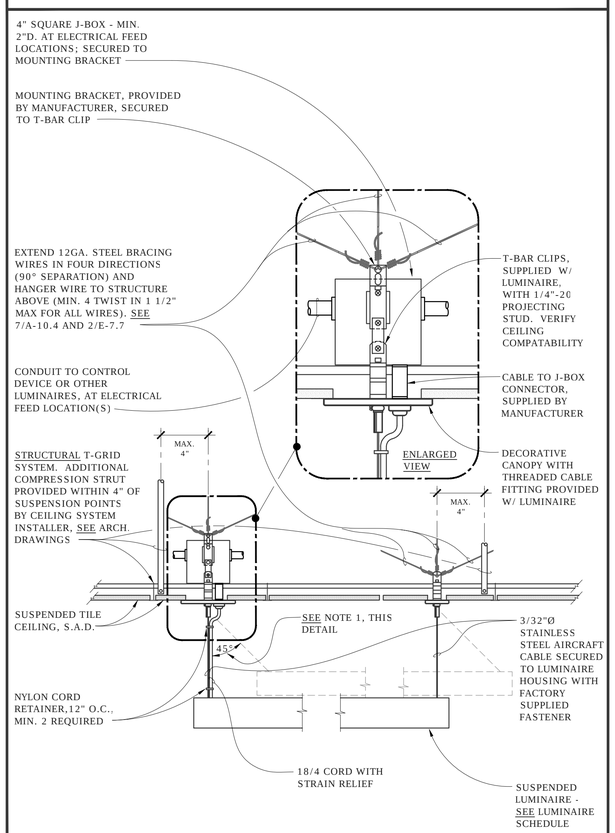

SUSPENDED LUMINAIRE: ON-GRID MOUNTING - T-BAR / SUSPENDED CEILING

5 / E-7.5

SCALE: NOT TO SCALE
FILE: L:\LIGHT\PENDANT\LPEND031

* OVERALL 24'-8" HEIGHT (LUMINAIRE + POLE + BASE) IS LESS THAN 35FT.; THEREFORE D.S.A. REVIEW IS NOT REQUIRED

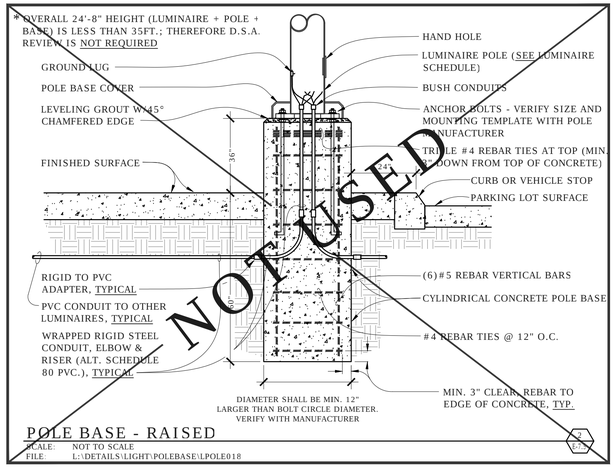

POLE BASE - RAISED

2 / E-7.5

SCALE: NOT TO SCALE
FILE: L:\DETAILS\LIGHT\POLEBASE\LPOLE018

* OVERALL 20'-0" OR 13'-8" HEIGHT (LUMINAIRE + POLE) IS LESS THAN 35FT.; THEREFORE D.S.A. REVIEW IS NOT REQUIRED

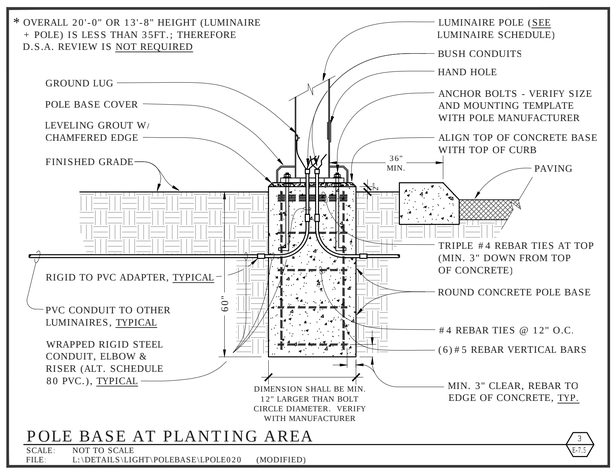

POLE BASE AT PLANTING AREA

3 / E-7.5

SCALE: NOT TO SCALE
FILE: L:\DETAILS\LIGHT\POLEBASE\LPOLE020 (MODIFIED)

QUATTROCCHI KWOK ARCHITECTS
Main Office:
636 Fifth Street, Santa Rosa, CA 95404
Pleasanton Office:
600 Main Street, Suite E,
Pleasanton, CA 94566
(707) 576-0829

O'MAHONY & MYER
ELECTRICAL ENGINEERING and LIGHTING DESIGN
4340 REDWOOD HWY., SUITE 245
SAN RAFAEL, CALIFORNIA 94903
(415) 492-0420/FAX (415) 479-9602
www.ommconsulting.com

PAUL J. COLEMAN No.14738 Exp. 6/21 REGISTERED PROFESSIONAL ENGINEER ELECTRICAL STATE OF CALIFORNIA

FREEDOM HIGH SCHOOL

PERFORMING ARTS AND CTE FACILITIES

1050 NEROLY RD
OAKLEY, CA 94561

LIBERTY UNION HIGH SCHOOL DISTRICT

	DSA	2019

ARCH PROJECT NO: 1739.00
DRAWN BY: TV/LN/ME
DRAWING SCALE:
PTN: 61721-0068

BID SET

JUNE 28, 2019

SHEET TITLE

DETAILS

SHEET NUMBER

E-7.5

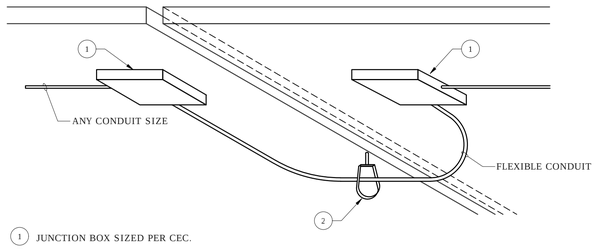

1 JUNCTION BOX SIZED PER CEC.

2 SUPPORT FLEX LOOP AT MIDPOINT WITH OVERSIZED J-CLEVIS ON THREADED ROD. CLEVIS TO BE SUSPENDED BELOW DECK.

CONDUITS LARGER THAN 1 INCH
(MAX. CONDUIT SIZE: 2")

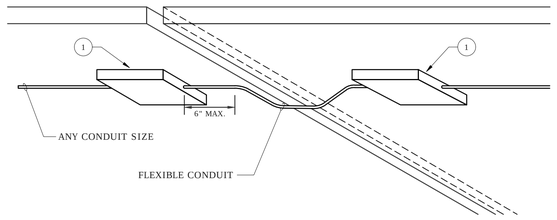

CONDUITS 1 INCH AND SMALLER

CONDUIT DETAIL AT SEISMIC AND EXPANSION JOINTS

4 E-7.6

SCALE: NONE
FILE L:\DETAILS\POWER\CONDUIT\PCOND044

* TYPICAL OF 2 CONTACTORS; 2 SET OF CONTROLS, ONE FOR EACH DRESSING ROOM.

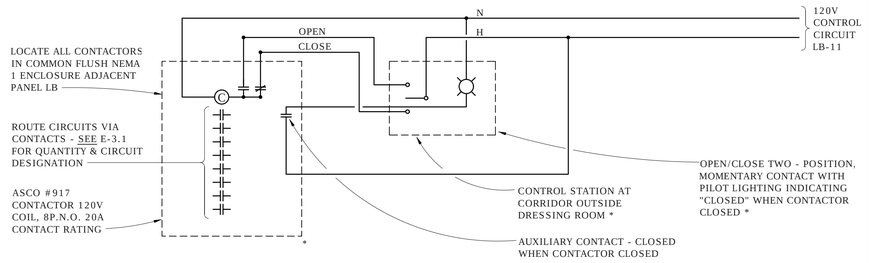

DRESSING STATION CONTROL (TYPICAL FOR 2 DRESSING ROOMS)

1 E-7.6

SCALE: NONE
FILE: (MODIFIED FOR 216061)

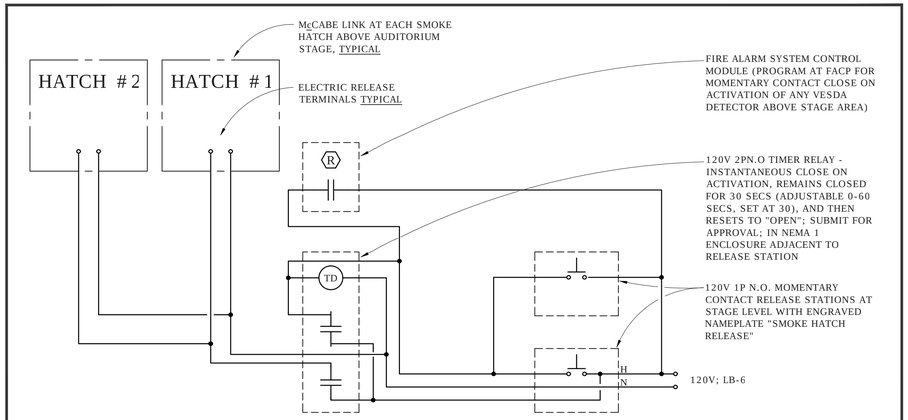

AUDITORIUM SMOKE HATCH CONTROL

SCALE: NONE (MODIFIED)

2 E-7.6

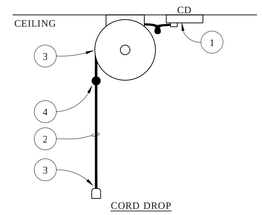

CORD DROP

DETAIL NOTES

1 TWIST-LOCK RATED RECEPTACLE LABELED "CORD DROP" AS NOTED ON ELECTRICAL PLAN.

2 PROVIDE 50FT MIN. CORD LENGTH.

3 CEILING MOUNTED 360 DEGREE SWIVEL INDUSTRIAL CORD REEL (HUBBELL #HBL45123C, OR EQUAL). PROVIDE FEMALE RECEPTACLE NEMA 5-20R, CONNECTOR. VERIFY WITH OWNER PRIOR TO PURCHASE.

4 SET HEIGHT OF CORD AS DIRECTED BY THE OWNER VIA BALL STOP.

TYPICAL CORD DROP REEL

3 E-7.6

SCALE: NONE
FILE L:\DETAILS\POWER\RECEPT\PRECE027A

QUATTROCCHI KWOK ARCHITECTS
Main Office:
636 Fifth Street, Santa Rosa, CA 95404
Pleasanton Office:
600 Main Street, Suite E,
Pleasanton, CA 94566
(707) 576-0829

O'MAHONY & MYER
ELECTRICAL ENGINEERING and LIGHTING DESIGN
4340 REDWOOD HWY., SUITE 245
SAN RAFAEL, CALIFORNIA 94903
(415) 492-0420/FAX (415) 479-9662
www.ommconsulting.com

PAUL J. COLEMAN No.14738 Exp. 6/21 REGISTERED PROFESSIONAL ENGINEER ELECTRICAL STATE OF CALIFORNIA

FREEDOM HIGH SCHOOL

PERFORMING ARTS AND CTE FACILITIES

1050 NEROLY RD
OAKLEY, CA 94561

LIBERTY UNION HIGH SCHOOL DISTRICT

1	DSA	2019

ARCH PROJECT NO: 1739.00
DRAWN BY: TV/LN/ME
DRAWING SCALE:
PTN: 61721-0068

BID SET

JUNE 28, 2019

SHEET TITLE

DETAILS

SHEET NUMBER

E-7.6

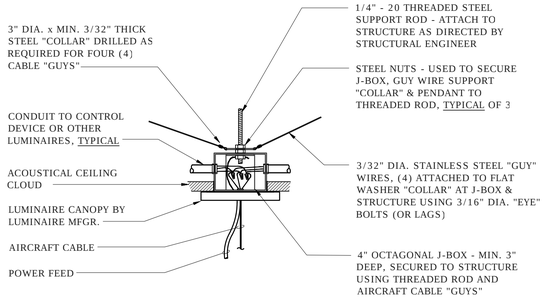

CABLE PENDANT MOUNTING

3 / E-7.7

SCALE: NONE
FILE: L:\DETAILS\LIGHT\PENDANT\LPEND042 (MODIFIED FOR 218054)

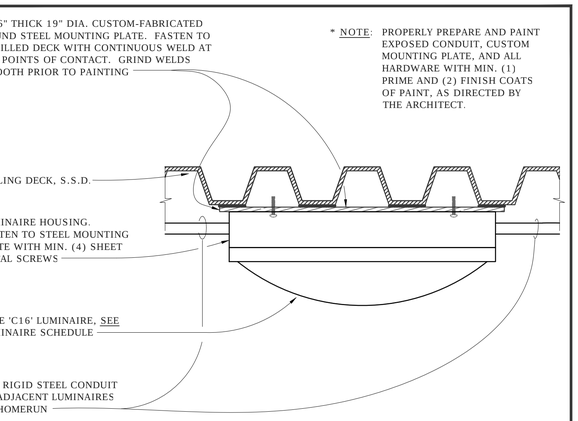

LUMINAIRE MOUNTING AT CANOPIES

4 / E-7.7

SCALE: NOT TO SCALE
FILE: L:\DETAILS\LIGHT\SURFACE\LSURF016 (MODIFIED FOR 218054)

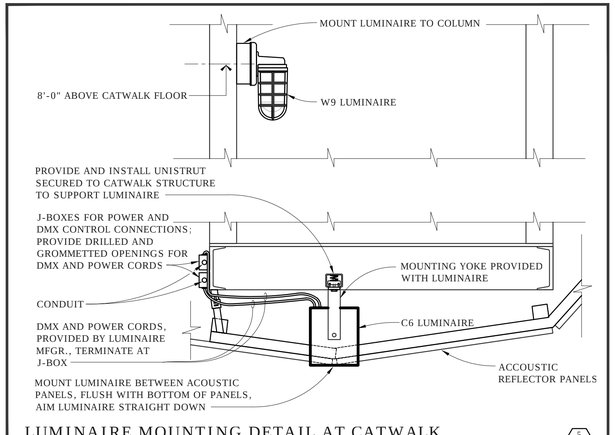

LUMINAIRE MOUNTING DETAIL AT CATWALK

5 / E-7.7

SCALE: NO SCALE
FILE: (NEW FOR 218054)

NOTES: 1. LUMINAIRE SHALL BE FREE TO SWING 45° FROM THE VERTICAL IN ALL DIRECTIONS WITHOUT HITTING ANY OBSTRUCTION.
2. FOR CONNECTION OF COMPRESSION ROD AND GUY WIRES TO STRUCTURE - SEE DETAILS 7/A-10.4 & 15/A-10.4.

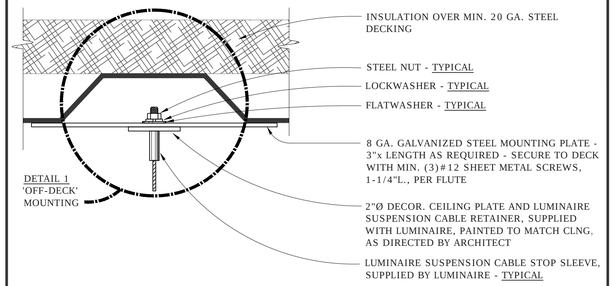

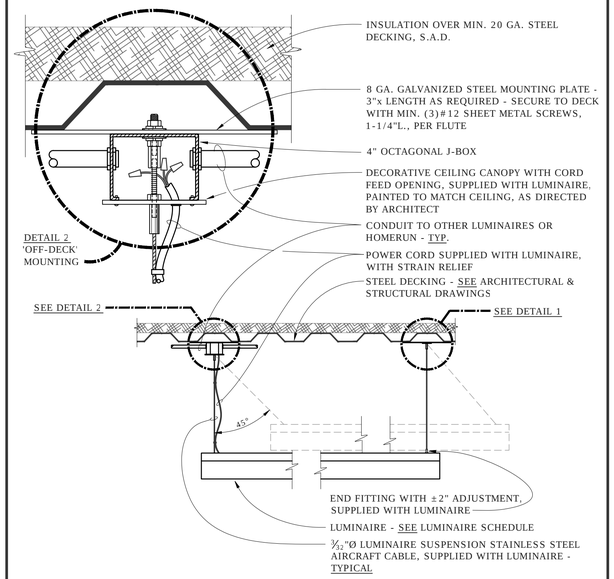

SUSPENDED LUMINAIRE MOUNTING - AT EXPOSED DECKING

1 / E-7.7

SCALE: NONE
FILE: L:\LIGHT\PENDANT\LPEND053A (MODIFIED FOR 218054)

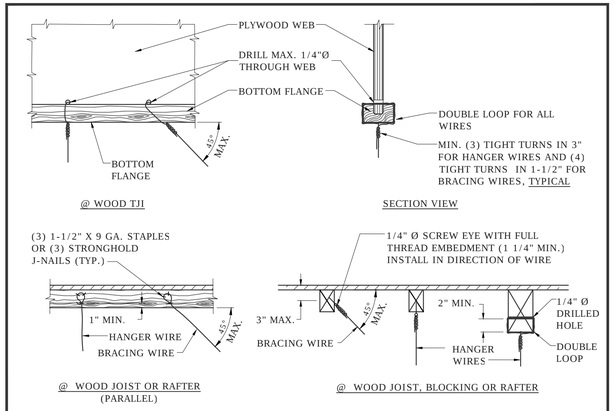

HANGER & BRACING WIRES AT WOOD FRAMING

2 / E-7.7

SCALE: NONE
FILE: L:\DETAILS\LIGHT\BRACING\LBRAC002A

QUATTROCCHI KWOK ARCHITECTS
Main Office:
636 Fifth Street, Santa Rosa, CA 95404
Pleasanton Office:
600 Main Street, Suite E,
Pleasanton, CA 94566
(707) 576-0829

O'MAHONY & MYER
ELECTRICAL ENGINEERING and LIGHTING DESIGN
4340 REDWOOD HWY., SUITE 245
SAN RAFAEL, CALIFORNIA 94903
(415) 492-0420/FAX (415) 479-9602
www.ommconsulting.com

REGISTERED PROFESSIONAL ENGINEER PAUL J. COLEMBROKE No.14738 Exp. 6/21 ELECTRICAL STATE OF CALIFORNIA

FREEDOM HIGH SCHOOL

PERFORMING ARTS AND CTE FACILITIES

1050 NEROLY RD
OAKLEY, CA 94561

LIBERTY UNION HIGH SCHOOL DISTRICT

1	DSA	2019

ARCH PROJECT NO: 1739.00
DRAWN BY: TV/LN/ME
DRAWING SCALE:
PTN: 61721-0068

BID SET

JUNE 28, 2019

SHEET TITLE

DETAILS

SHEET NUMBER

E-7.7

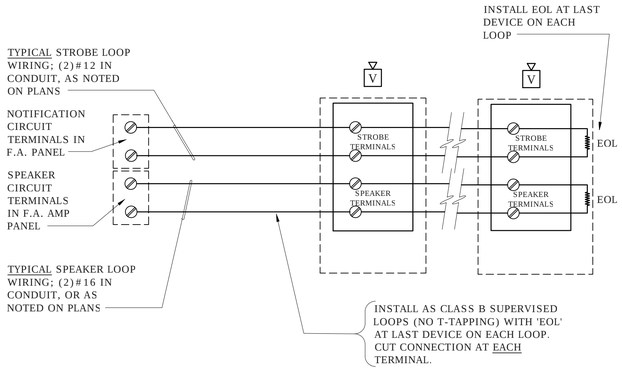

TYPICAL NOTIFICATION / SPEAKER CIRCUIT WIRING

1

SCALE: NONE
FILE: L:\DETAILS\POWER\FIREALRM\PFIRE012A

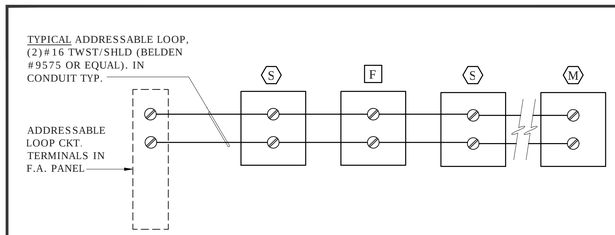

NOTE:

1. T-TAPPING ALLOWED ON ADDRESSABLE LOOPS. NO `EOL' DEVICES REQUIRED. MAXIMUM TOTAL LENGTH OF 3,000 FEET.
2. PROPERLY TERMINATE SHIELDS AND DRAINS AS PER SYSTEM SUPPLIERS RECOMMENDED INSTRUCTIONS.

TYPICAL ADDRESSABLE INITIATION LOOP WIRING

2

SCALE: NONE
FILE: L:\DETAILS\POWER\FIREALRM\PFIRE013

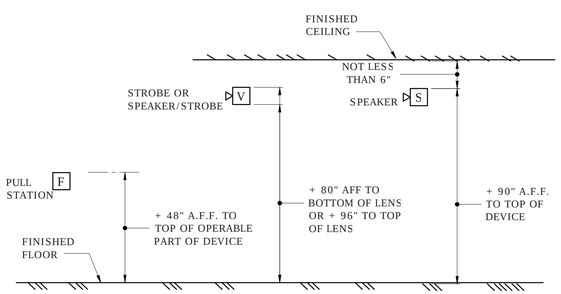

FIRE ALARM DEVICE MOUNTING HEIGHT DETAIL

3

SCALE: NOT TO SCALE
FILE: L:\DETAILS\POWER\FIREALRM\PFIRE002 MOD.

GENERAL FIRE ALARM NOTES CONTD.

1. PER CEC STANDARDS, ALL WIRING IS TO BE PULLED THROUGH EACH JUNCTION BOX AND CONNECTED DIRECTLY TO EACH FIRE ALARM DEVICE. DO NOT SPLICE WIRE. THERE MUST BE AT LEAST 6" OF WIRE LEAD FROM THE BOX TO THE DEVICE. ALL BOXES TO BE SIZED PER CEC FOR PROPER VOLUME WITH INSTALLED WIRING AND DEVICES.
2. SUPERVISING STATION: AUTOMATIC FIRE ALARM SYSTEMS SHALL TRANSMIT THE ALARM, SUPERVISORY AND TROUBLE SIGNALS TO AN APPROVED SUPERVISING STATION AS REQUIRED BY NFPA 72, AS AMENDED BY CFC CHAPTER 80. THE SUPERVISION STATION SHALL BE LISTED AS EITHER UUFX OR UUJS BY UNDERWRITERS LABORATORY OR SHALL MEET THE REQUIREMENTS OF FACTORY MUTUAL RESEARCH APPROVAL STANDARD 3011.
3. A DOCUMENTATION CABINET SHALL BE INSTALLED ADJACENT TO THE FACP IN THE FRONT OFFICE (NFPA 72, 7.7.2.1).
4. ALL RECORD DOCUMENTATION SHALL BE STORED IN THE DOCUMENTATION CABINET (NFPA 72, 7.7.2.2): PROVIDE NAMEPLATE "FIRE ALARM SYSTEM RECORD DOCUMENTS" (NFPA 72, 7.7.2.4).

FIRE ALARM WIRING LEGEND

TAG	DESCRIPTION	CABLING
A	INITIATION CIRCUIT	(2) #16 TWISTED/UNSHIELDED
B	NOTIFICATION CIRCUIT	(2) #12 THWN
C	SPEAKER WIRING	(2) #16 SHIELDED, SPEAKER CABLE
D	COMMUNICATIONS	(1) 6-STRAND SM (OS2) FIBER OPTIC CABLING, OSP RATED.

NOTES:
CONTRACTOR SHALL VERIFY EXACT CABLE/WIRE TYPES WITH SYSTEM MANUFACTURER PRIOR TO ROUGH-IN.
INSTALL CABLES IN WIREMOLD RACEWAY IN FINISH AREAS LIKE OFFICES, ADMIN & CLASSROOMS.

FIRE ALARM SYSTEM DESCRIPTION

1. THE FIRE ALARM SYSTEM SHALL BE AN AUTOMATIC ADDRESSABLE SYSTEM WITH VOICE EVACUATION, CLASS B WIRING FOR NAC'S AND SLC'S TO MATCH EXISTING.
2. CIRCUIT PATHWAY SURVIVABILITY SHALL BE LEVEL 1.
3. PROVIDE AND INSTALL NEW EQUIPMENT, DEVICES AND REQUIRED MODULES FULLY COMPATIBLE WITH (E) FACP AND PROVIDE CONNECTIONS COMPLETE FOR A FULLY FUNCTIONING NETWORKED FIRE ALARM SYSTEM.
4. THE NEW FIRE ALARM SYSTEM INCLUDES CARBON MONOXIDE DETECTORS WHERE REQUIRED.
5. THE NAME OF THE SPECIFIC PERSON RESPONSIBLE FOR THE SYSTEM DESIGN IS CHRIS LIPPINCOTT (O'MAHONY & MYER).
6. SYSTEM INSTALLATION SHALL BE BY A LICENSED ELECTRICAL OR FIRE ALARM CONTRACTOR WITH A CALIFORNIA C-10 LICENSE, FACTORY-AUTHORIZED, REGULARLY ENGAGED IN THE INSTALLATION AND COMMISSIONING OF FIRE ALARM SYSTEMS TO NFPA 72 STANDARDS. INSTALLING CONTRACTOR'S NAME AND CONTACT INFORMATION SHALL BE LISTED IN THE NFPA CLOSE OUT DOCUMENTATION AT COMPLETION OF PROJECT.

FIRE ALARM SCOPE OF WORK

1. TERMINATE EACH NOTIFICATION LOOP TO THE FAEP, VOICE EVAC SYSTEM AS SHOWN ON PLANS AND RISER DIAGRAMS. PROVIDE NECESSARY MODULES IN THE (E) FACP TO ACCOMMODATE THE NEW DEVICES & VOICE EVAC SYSTEM.
2. TERMINATE EACH INITIATION LOOP AT THE MAIN FIRE ALARM CONTROL PANEL AS SHOWN.
3. PROVIDE A COMPLETE NETWORK FIRE ALARM SYSTEM, INCLUDING REMOTE POWER SUPPLY TERMINAL CABINETS, EXPANDER PANELS, OUTLETS, DEVICES AND WIRING FOR THE FACILITY AS SHOWN.

SEQUENCE OF OPERATION

1. MANUAL PULL STATION - WHEN A PULL STATION IS PULLED, IT SHALL ANNUNCIATE AN ALARM AT THE FACP. ALARM SHALL ACTIVATE ALL AUDIO AND VISUAL DEVICES THROUGHOUT THE CAMPUS.
2. SMOKE AND HEAT DETECTORS - WHEN A SMOKE OR HEAT DETECTOR IS ACTIVATED, IT SHALL ANNUNCIATE AN ALARM AT THE FACP. ALARM SHALL ACTIVATE ALL AUDIO AND VISUAL DEVICES THROUGHOUT THE CAMPUS.
3. CARBON MONOXIDE DETECTORS - WHEN TRIGGERED, CARBON MONOXIDE DETECTORS SHALL BE PROGRAMMED TO PROVIDE LOCAL NOTIFICATION THROUGH DEVICE BASE AS WELL AS ADMINISTRATION AREA NOTIFICATION THROUGH DEDICATED HORN/STROBE EMITTING A TEMPORAL 4 TONE. A CARBON MONOXIDE ALARM SHALL NOT ACTIVATE CAMPUS FIRE ALARM SYSTEM AND SHALL NOT DIAL OUT TO OFF-SITE MONITORING.
4. ANY BUILDING POWER FAILURE- IF THE BUILDING LOSES POWER, THE FAILURE SHALL SHOW UP AS A TROUBLE SIGNAL ON THE FACP. THE SYSTEM SHALL STAY ACTIVE ON BATTERY BACK-UP POWER IN ACCORDANCE WITH THE STATE FIRE CODE.
5. SYSTEM SHALL INDICATE TROUBLE ALARMS FOR ALL SYSTEM FAULTS (i.e. GROUND FAULTS, SHORTS, OPEN CIRCUITS, BATTERY DISCONNECT, ETC.).
6. FIRE/SMOKE DAMPERS - WHEN A FIRE/SMOKE DAMPER SMOKE DETECTOR IS ACTIVATED, IT SHALL ANNUNCIATE AN ALARM AT THE MAIN FACP. ALARM SHALL ACTIVATE ALL AUDIO AND VISUAL DEVICES THROUGHOUT THE CAMPUS AND SHALL SHUT DOWN THE ASSOCIATED HVAC UNIT.
7. FIRE SPRINKLER SYSTEM - WHEN A FLOW SWITCH IS ACTIVATED, IT SHALL ANNUNCIATE AN ALARM AT THE MAIN FACP. ALARM SHALL ACTIVATE ALL AUDIO AND VISUAL DEVICES THROUGHOUT THE CAMPUS. WHEN TAMPER SWITCH IS ACTIVATED, IT SHALL ANNUNCIATE A SUPERVISORY ALARM AT THE MAIN FACP.
8. UPON ALARM CONDITION, AUTO DIALER TO NOTIFY THE SUPERVISING STATION, AND AUTHORIZED SCHOOL PERSONNEL TO NOTIFY THE FIRE DEPARTMENT AND INITIATE EVACUATION OF STUDENTS AND FACULTY AS PER THE SCHOOL'S EVACUATION PLAN.
9. UPON TROUBLE CONDITION, AUTO DIALER TO NOTIFY THE SUPERVISING STATION, AND AUTHORIZED SCHOOL PERSONNEL TO NOTIFY AUTHORIZED TECHNICIAN TO CORRECT THE TROUBLE CONDITION.

FIRE ALARM EQUIPMENT LIST

SYMBOL	DESCRIPTION	MANUFACTURER & MODEL NUMBER	CSFM LISTING NUMBER	STANDBY CURRENT	ALARM CURRENT
FACP	FIRE ALARM VOICE EVAC CONTROL PANEL WITH DIGITAL AUDIO CONTROLLER, 50W AMPLIFIER, MICROPHONE MULTIPLEX MODULE & EXPANSION BAY	SIMPLEX 4100ES	7165-0026:0251	373mA 200mA	470mA 250mA
FAEP	FIRE ALARM MINIPLEX TRANSPONDER	SIMPLEX 4100-9600	7165-0026:0251	87mA	87mA
FAAP	FIRE ALARM REMOTE ANNUNCIATOR W/ MICROPHONE	SIMPLEX 4100-9611	7165-0026:0251	87mA	87mA
M	ADDRESSABLE MONITOR MODULE W/ EOLR	SIMPLEX 4090-9001	7300-0026:0223	-	5.10mA
R	ADDRESSABLE RELAY MODULE	SIMPLEX 4090-9002	7300-0026:0223	-	-
S	ADDRESSABLE PHOTOELECTRIC SMOKE DETECTOR	SIMPLEX 4098-9714	7272-0026:0218	0.40mA	1mA
H	ADDRESSABLE PHOTOELECTRIC HEAT DETECTOR	SIMPLEX 4098-9733	7272-0026:0218	0.40mA	1mA
-	DETECTOR BASE	SIMPLEX 4098-9792	7300-0026:0217	-	-
S CO	ADDRESSABLE CO SENSOR BASE	SIMPLEX 4098-9773	7300-0026:0330	1.00mA	139mA
D	ADDRESSABLE DUCT SMOKE DETECTOR	SIMPLEX 4908-9756	3240-0026:0241	2mA	40mA
-	DUCT DETECTOR REMOTE TEST STATION	SIMPLEX 2098-9806	7300-0026:0150	-	-
F	ADDRESSABLE MANUAL PULLSTATION	SIMPLEX 4099-9004	7150-0026:0224	0.038mA	5.10mA
	ADDRESSABLE AIR SAMPLING SMOKE DETECTION SYSTEM	VESDA-E VEA-040-A10	7259-1728:0122	1.13A	1.13A
S	VISUAL STROBE, WALL MOUNT, SELECTABLE CANDELA UL 1971 PUBLIC MODE NOTIFICATION	SIMPLEX 4906-9103	7125-0026:0316	-	-
			15cd	0mA	53mA
			30cd	0mA	84mA
			75cd	0mA	165mA
			110cd	0mA	224mA
V	COMBINATION VISUAL STROBE AND SPEAKER, WALL MOUNT, SELECTABLE CANDELA UL 1971 PUBLIC MODE NOTIFICATION, VISUAL DEVICE	SIMPLEX 4906-9153 (1/2 WATT TAP)	7320-0026:0247	-	-
			STROBE CKT: 15cd	0mA	53mA
			STROBE CKT: 30cd	0mA	84mA
			STROBE CKT: 75cd	0mA	165mA
			STROBE CKT: 110cd	0mA	224mA
S	EXTERIOR AUDIBLE SPEAKER WITH WEATHER-PROOF BACKBOX	WHEELOCK #ET-1010R (1W TAP)	7320-0785:0105	0mA	7mA
	DOCUMENTATION CABINET	SPACE AGE ELECT. SSU00685			

NOTE:
DETECTOR SUBSCRIPTS:
"c" - DETECTOR IN ACCESSIBLE CEILING SPACE
"p" - DETECTOR WITHIN 36" OF PEAK

GENERAL FIRE ALARM NOTES

1. FINAL FIRE ALARM TEST SHALL BE MADE WITH THE DSA INSPECTOR OF RECORD (IOR). LOCAL FIRE AUTHORITY SHALL BE NOTIFIED OF DATE AND TIME OF FINAL ALARM TESTING AND SHALL ASSIST/WITNESS SUCH TESTING WHEN ABLE. DSA/ARCHITECT/ENGINEER AND OWNER SHALL BE NOTIFIED A MINIMUM OF (48) HOURS PRIOR TO THE FINAL INSPECTION AND/OR TESTING.
2. FIRE ALARM CONTRACTOR SHALL PROVIDE SYSTEM PROGRAMMING FOR SUPERVISORY MONITORING PER CBC SECTION 901.6.2. MONITORING SHALL BE TESTED AND VERIFIED AS SENDING THE CORRECT SIGNALS IN CONJUNCTION WITH FINAL ACCEPTANCE TEST. OWNER SHALL BE RESPONSIBLE FOR ESTABLISHING A FIRE SYSTEM MONITORING CONTRACT AND/OR PROVISIONS
3. UNDERGROUND AND EXTERIOR CONDUITS SHALL HAVE WATERTIGHT FITTINGS.
4. FIRE ALARM DEVICE MOUNTING HEIGHTS:

   PULL STATION: 48" TO TOP OF OPERATOR ABOVE FINISHED FLOOR.

   HORN INTERIOR: 90" MIN. TO TOP OF DEVICE ABOVE FINISHED FLOOR, OR 100" MAX TO TOP OF DEVICE, BUT NOT LESS THAN 6" FROM CEILING.

   WALL MOUNTED STROBE OR HORN/STROBE: BETWEEN 80" TO BOTTOM OF DEVICE LENS TO +96" TO TOP OF DEVICE LENS ABOVE FINISH FLOOR, BUT NOT LESS THAN 6" FROM CEILING.

   CONTROL PANELS / ANNUNCIATORS: 48" TO BOTTOM OF EQUIPMENT.
5. AUDIBLE FIRE ALARM SYSTEM LEVEL SHALL BE AT LEAST 15dBA ABOVE THE AVERAGE AMBIENT SOUND LEVEL IN ALL OCCUPIABLE AREAS, OR 5 dBA ABOVE THE MAXIMUM SOUND LEVEL HAVING A DURATION OF AT LEAST 60 SECONDS, WHICHEVER IS GREATER, MEASURED AT 5 FEET ABOVE THE FLOOR. AUDIBLE SIGNALS SHALL NOT BE LESS THAN 75dBA AT 10 FEET, OR MORE THAN 110dBA AT THE MINIMUM HEARING DISTANCE.
6. AUDIBLE DEVICES SHALL BE SYNCHRONIZED TEMPORAL THREE DISTINCTIVE FIRE ALARM SOUND PER NFPA 72.
7. APPLICABLE CODES:
   a. CBC 2016; CEC 2016; CMC 2016; CFC 2016.
   b. STATE FIRE MARSHAL TITLE 19, PUBLIC SAFETY.
   c. NFPA 72, 2016 EDITION W/CA AMENDMENTS, FIRE ALARM CODE.
   d. NFPA 720, STANDARD FOR THE INSTALLATION OF CARBON MONOXIDE (CO) DETECTION AND WARNING EQUIPMENT, 2015.
8. STROBES SHALL FLASH AT A RATE NOT EXCEEDING TWO FLASHES PER SECOND, AND NOT LESS THAN ONE FLASH EVERY SECOND. THE DEVICE SHALL HAVE A PULSING LIGHT SOURCE NOT LESS THAN 15 CANDELA. VISUAL DEVICES WITHIN 55 FEET OF EACH OTHER SHALL BE SYNCHRONIZED.
9. FIRE ALARM CONTRACTOR SHALL PROVIDE A "RECORD OF COMPLETION" TO THE INSPECTOR OF RECORD IOR/DSA AFTER COMPLETION OF OPERATIONAL ACCEPTANCE TESTS, PER NFPA 72.
10. POWER SERVICE TO THE FACP, REMOTE POWER SUPPLIES, AND CENTRAL STATION AUTO DIALER SHALL BE ON A DEDICATED BRANCH CIRCUIT WITH A RED MARKING AND IDENTIFIED AS "FIRE ALARM CIRCUIT CONTROL".
11. INSTALL ALL WIRING IN CONDUIT, MIN. 3/4" CONDUIT. ALL FIRE ALARM SYSTEM WIRING SHALL BE FLP (FIRE POWER LIMITED) OR FPLP (FIRE POWER LIMITED PLENUM RATED) AS REQUIRED FOR APPLICATION. WIRING IN CONDUIT ABOVE GROUND MAY BE THHN OR THWN.
12. CONDUIT AND WIRING SHALL BE PER MANUFACTURERS REQUIREMENTS.
13. ALL FIRE ALARM COMPONENTS SHALL BE SECURED TO MOUNTING SURFACES PER MANUFACTURERS SPECIFICATIONS. NO SINGLE DEVICES/EQPT. SHALL EXCEED 20LBS. WITHOUT SPECIAL MOUNTING DETAILS.
14. INSTALLATION OF SYSTEM SHALL NOT BE STARTED UNTIL COMPLETE SET OF CONSTRUCTION DOCUMENTS (WITH DEVICE TYPES AND LISTINGS) HAVE BEEN REVIEWED AND APPROVED BY DSA.
15. A STAMPED SET OF APPROVED PLANS SHALL BE ON THE JOB SITE AT ALL TIMES AND SHALL BE USED FOR INSTALLATION.
16. ANY DISCREPANCIES BETWEEN THE CONTRACT DOCUMENTS AND CODE OR RECOGNIZED STANDARDS SHALL BE BROUGHT TO THE ATTENTION OF DSA AND ARCHITECT/ENGINEER OF RECORD.
17. THE CONTRACTOR SHALL INSTALL AND ADJUST ALL DEVICES TO MAXIMIZE PERFORMANCE AND TO MINIMIZE FALSE ALARMS.
18. SMOKE DETECTORS SHALL NOT BE ANY CLOSER THAN 1 FOOT FROM FIRE SPRINKLER HEADS OR 3 FEET FROM ANY SUPPLY DIFFUSER. IN AREAS OF CONSTRUCTION OR POSSIBLE DAMAGE /CONTAMINATION, INSTALLED DEVICES SHALL BE COVERED UNTIL AREA IS READY TO BE TURNED OVER TO THE OWNER.

QUATTROCCHI KWOK ARCHITECTS
Main Office:
636 Fifth Street, Santa Rosa, CA 95404
Pleasanton Office:
600 Main Street, Suite E,
Pleasanton, CA 94566
(707) 576-0829

O'MAHONY & MYER
ELECTRICAL ENGINEERING and LIGHTING DESIGN
4340 REDWOOD HWY., SUITE 245
SAN RAFAEL, CALIFORNIA 94903
(415) 492-0420/FAX (415) 479-9662
www.ommconsulting.com

PAUL J. COLEMAN No. 14738 Exp. 6/21 REGISTERED PROFESSIONAL ENGINEER ELECTRICAL STATE OF CALIFORNIA

FREEDOM HIGH SCHOOL

PERFORMING ARTS AND CTE FACILITIES

1050 NEROLY RD
OAKLEY, CA 94561

LIBERTY UNION HIGH SCHOOL DISTRICT

1	DSA	2019

ARCH PROJECT NO: 1739.00
DRAWN BY: TV/LN/ME
DRAWING SCALE:
PTN: 61721-0068

BID SET

JUNE 28, 2019

SHEET TITLE:

FIRE ALARM NOTES, DETAILS & COMPONENTS LIST

SHEET NUMBER

FE-0.1

FREEDOM HS PERFORMING ARTS CENTER AND CTE - 218054

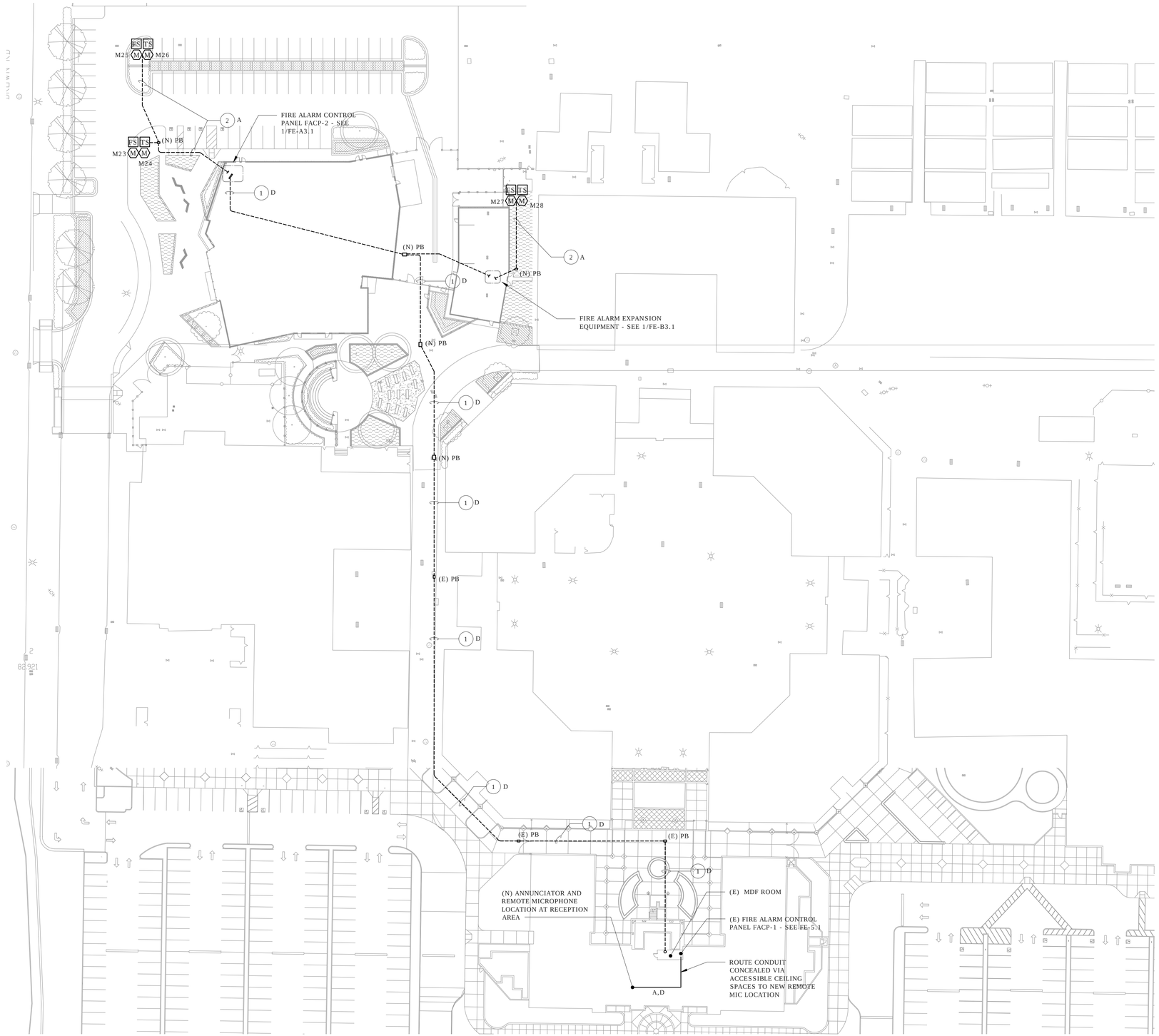

SITE PLAN - FIRE ALARM

SCALE 1" = 40'

REF. NORTH

1 / FE-1.1

NUMBERED SHEET NOTES

1. PROVIDE AND INSTALL FIRE ALARM CABLING NOTED VIA UNDERGROUND ROUTE SHOWN ON SHEET E-1.1 AND E-1.0. PROVIDE FIRE ALARM CABLING NOTED ADJACENT NUMBERED NOTE.
2. PROVIDE AND INSTALL FIRE ALARM CABLING NOTED VIA UNDERGROUND ROUTE SHOWN ON SHEET E-1.1. PROVIDE FIRE ALARM CABLING NOTED ADJACENT NUMBERED NOTE.

QUATTROCCHI KWOK ARCHITECTS
Main Office:
636 Fifth Street, Santa Rosa, CA 95404
Pleasanton Office:
600 Main Street, Suite E,
Pleasanton, CA 94566
(707) 576-0829

O'MAHONY & MYER
ELECTRICAL ENGINEERING and LIGHTING DESIGN
4340 REDWOOD HWY., SUITE 245
SAN RAFAEL, CALIFORNIA 94903
(415) 492-0420/FAX (415) 479-9662
www.ommconsulting.com

REGISTERED PROFESSIONAL ENGINEER PAUL J. COLEMAN No. 14738 Exp. 6/21 ELECTRICAL STATE OF CALIFORNIA

FREEDOM HIGH SCHOOL

PERFORMING ARTS AND CTE FACILITIES

1050 NEROLY RD
OAKLEY, CA 94561

LIBERTY UNION HIGH SCHOOL DISTRICT

	DSA	2019

ARCH PROJECT NO: 1739.00
DRAWN BY: TV/LN/ME
DRAWING SCALE:
PTN: 61721-0068

BID SET

JUNE 28, 2019

SHEET TITLE

SITE PLAN - FIRE ALARM

SHEET NUMBER

FE-1.1

FREEDOM HS PERFORMING ARTS CENTER AND CTE – 218054

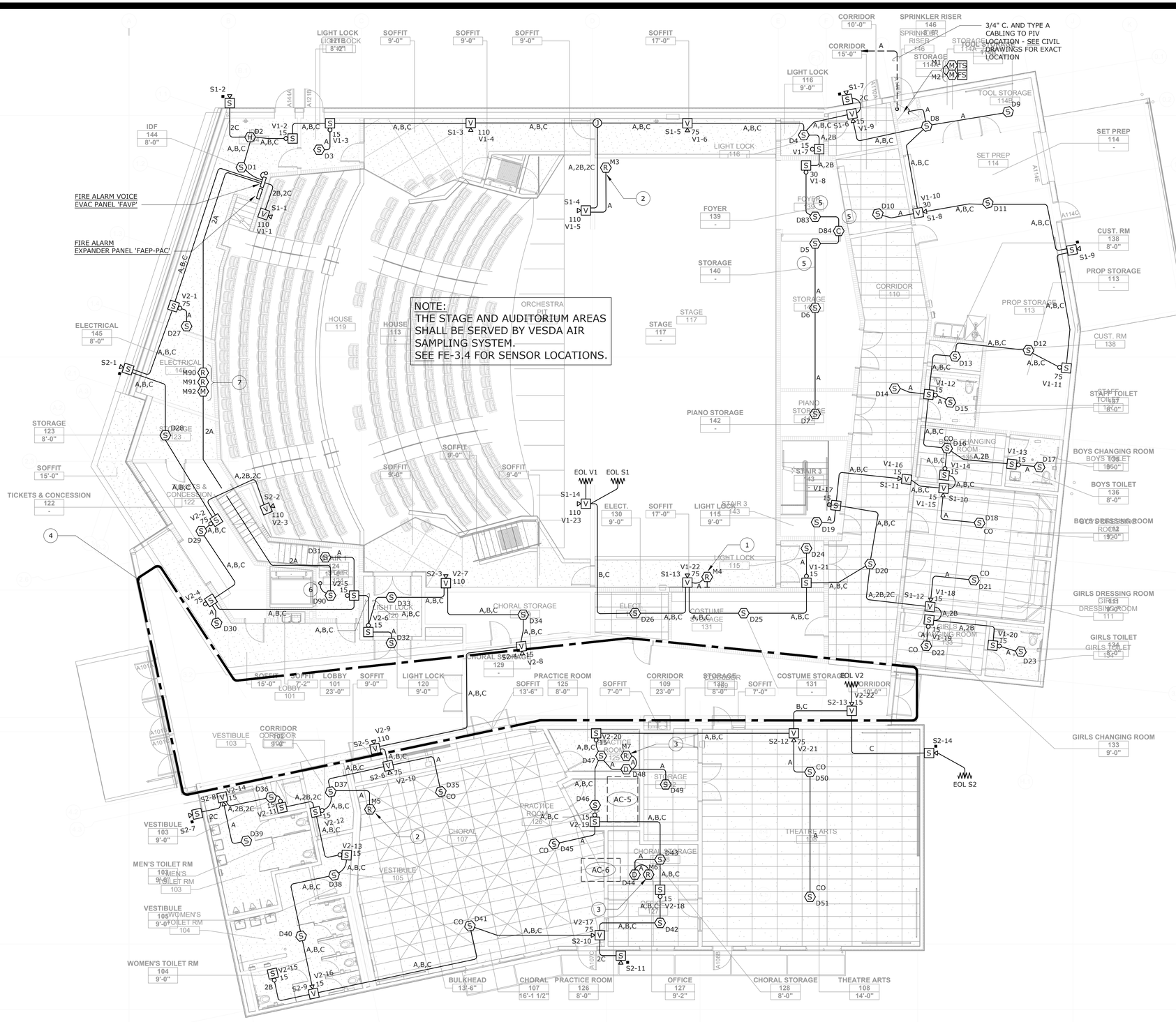

BUILDING A - 1ST FLOOR PLAN - FIRE ALARM - PAC

SCALE 1/8" = 1' - 0"

1 E-431.1

NUMBERED SHEET NOTES

1. PROVIDE AND INSTALL RELAY MODULE FOR FIRE ALARM SYSTEM CONTROL OF STAGE SMOKE HATCH RELEASE. CONNECT COMPLETE TO STAGE HATCH CONTROL PANEL.
2. PROVIDE AND INSTALL RELAY MODULE FOR FIRE ALARM SYSTEM CONTROL OF AV PANEL. CONNECT COMPLETE TO AV PANEL. SEE AV SYSTEM DRAWINGS FOR PANEL LOCATION.
3. PROVIDE AND INSTALL RELAY MODULE TO FACILITATE AUTOMATIC SHUTDOWN OF MECHANICAL UNIT UPON ALARM. COORDINATE EXACT LOCATION WITH DIVISION 23 - MECHANICAL.
4. SEE FE-3.4 FOR CEILING MOUNTED DEVICES IN THIS AREA.
5. DEDICATED SMOKE AND CONTROL MODULE ARRANGEMENT FOR FIRE DOOR RELEASE. PROGRAM DEVICES TO INITIATE ROLL DOWN OF FIRE DOOR UPON ALARM CONDITION. LOCATE SMOKE DEVICES WITHIN 5' OF FIRE DOOR, ON EACH SIDE.
6. ELEVATOR RECALL SMOKE DETECTOR - LOCATE WITHIN 3' OF ELEVATOR DOOR. REFER TO 3/E-5.3 FOR REQUIREMENTS.
7. DEVICES TO BE LOCATED ADJACENT DISTRIBUTION BOARD DP-PH FOR ELEVATOR SHUT TRIP CIRCUIT BREAKER FIRE ALARM CONNECTION REQUIREMENTS. REFER TO 3/E-5.3 AND 1/E-5.1 FOR REQUIREMENTS.

QUATTROCCHI KWOK ARCHITECTS
Main Office:
636 Fifth Street, Santa Rosa, CA 95404
Pleasanton Office:
600 Main Street, Suite E,
Pleasanton, CA 94566
(707) 576-0829

O'MAHONY & MYER
ELECTRICAL ENGINEERING and LIGHTING DESIGN
4340 REDWOOD HWY., SUITE 245
SAN RAFAEL, CALIFORNIA 94903
(415) 492-0420/FAX (415) 479-9662
www.ommconsulting.com

PAUL J. COLEMAN — No. 14738 — Exp. 6/21 — REGISTERED PROFESSIONAL ENGINEER — ELECTRICAL — STATE OF CALIFORNIA

FREEDOM HIGH SCHOOL

PERFORMING ARTS AND CTE FACILITIES

1050 NEROLY RD
OAKLEY, CA 94561

LIBERTY UNION HIGH SCHOOL DISTRICT

	DSA	2019

ARCH PROJECT NO: 1739.00
DRAWN BY: TV/LN/ME
DRAWING SCALE:
PTN: 61721-0068

BID SET

JUNE 28, 2019

SHEET TITLE

BUILDING A - FIRST FLOOR PLAN - FIRE ALARM - PAC

SHEET NUMBER

FE-A3.1

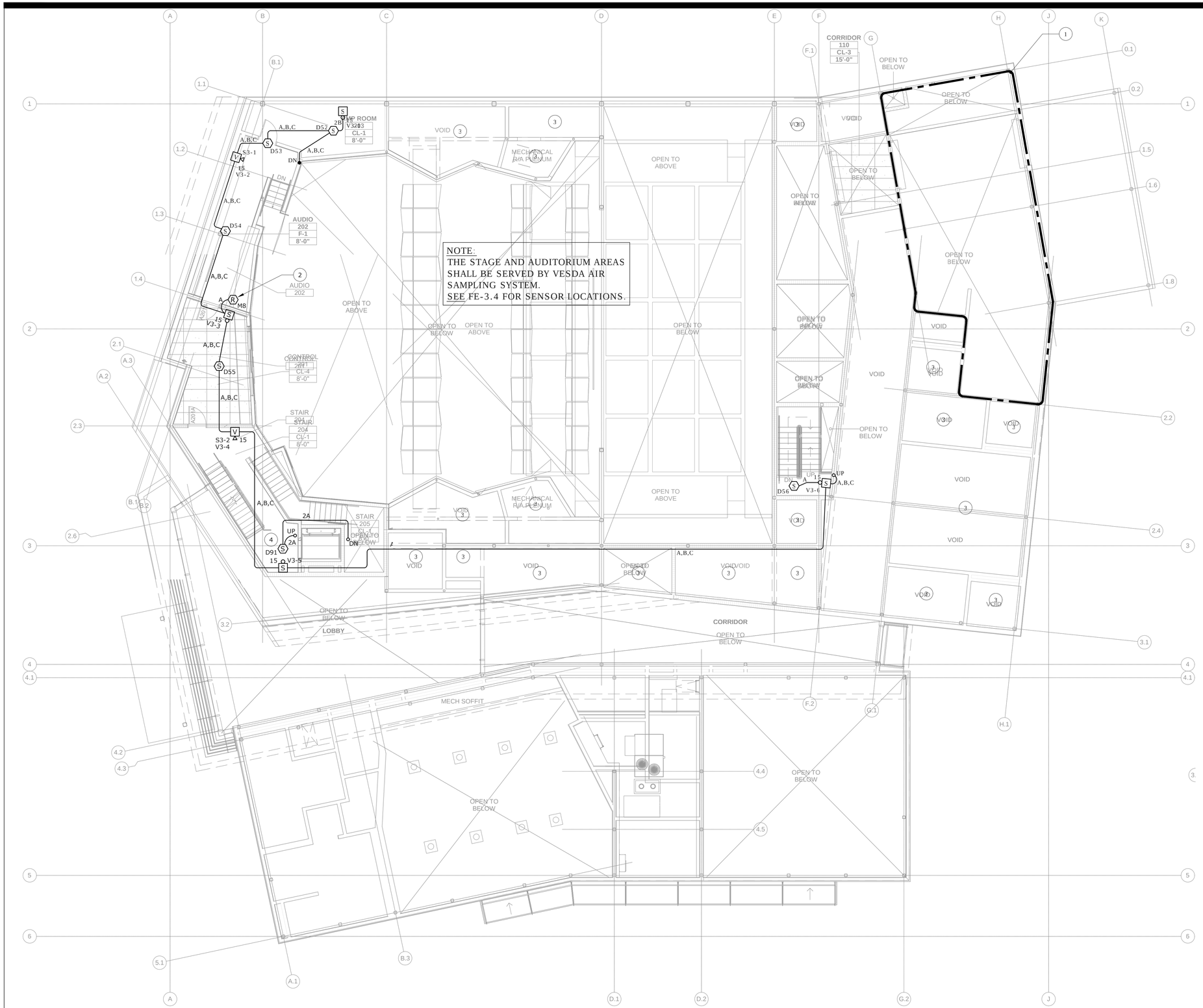

BUILDING A - CONTROL BOOTH LEVEL PLAN - FIRE ALARM - PAC

SCALE 1/8" = 1' - 0"

NUMBERED SHEET NOTES

1. SEE FE-3.1 FOR CEILING MOUNTED DEVICES IN THIS ROOM.
2. PROVIDE AND INSTALL RELAY MODULE FOR FIRE ALARM SYSTEM CONTROL OF AV PANEL. CONNECT COMPLETE TO AV PANEL. SEE AV SYSTEM DRAWINGS FOR PANEL LOCATION.
3. THIS ENCLOSED AREA IS FULLY SPRINKLERED AND THEREFORE DOES NOT REQUIRE FIRE ALARM DEVICES.
4. ELEVATOR RECALL SMOKE DETECTOR - LOCATE WITHIN 3' OF ELEVATOR DOOR. REFER TO 3/E-5.3 FOR REQUIREMENTS.

QUATTROCCHI KWOK ARCHITECTS
Main Office:
636 Fifth Street, Santa Rosa, CA 95404
Pleasanton Office:
600 Main Street, Suite E,
Pleasanton, CA 94566
(707) 576-0829

O'MAHONY & MYER
ELECTRICAL ENGINEERING and LIGHTING DESIGN
4340 REDWOOD HWY., SUITE 245
SAN RAFAEL, CALIFORNIA 94903
(415) 492-0420/FAX (415) 479-9602
www.ommconsulting.com

PAUL J. COLEMAN No. 14738 Exp. 6/21 REGISTERED PROFESSIONAL ENGINEER ELECTRICAL STATE OF CALIFORNIA

FREEDOM HIGH SCHOOL

PERFORMING ARTS AND CTE FACILITIES

1050 NEROLY RD
OAKLEY, CA 94561

LIBERTY UNION HIGH SCHOOL DISTRICT

	DSA	2019

ARCH PROJECT NO: 1739.00
DRAWN BY: TV/LN/ME
DRAWING SCALE:
PTN: 61721-0068

BID SET

JUNE 28, 2019

SHEET TITLE

BUILDING A - CONTROL BOOTH LEVEL PLAN - FIRE ALARM - PAC

SHEET NUMBER

FE-A3.2

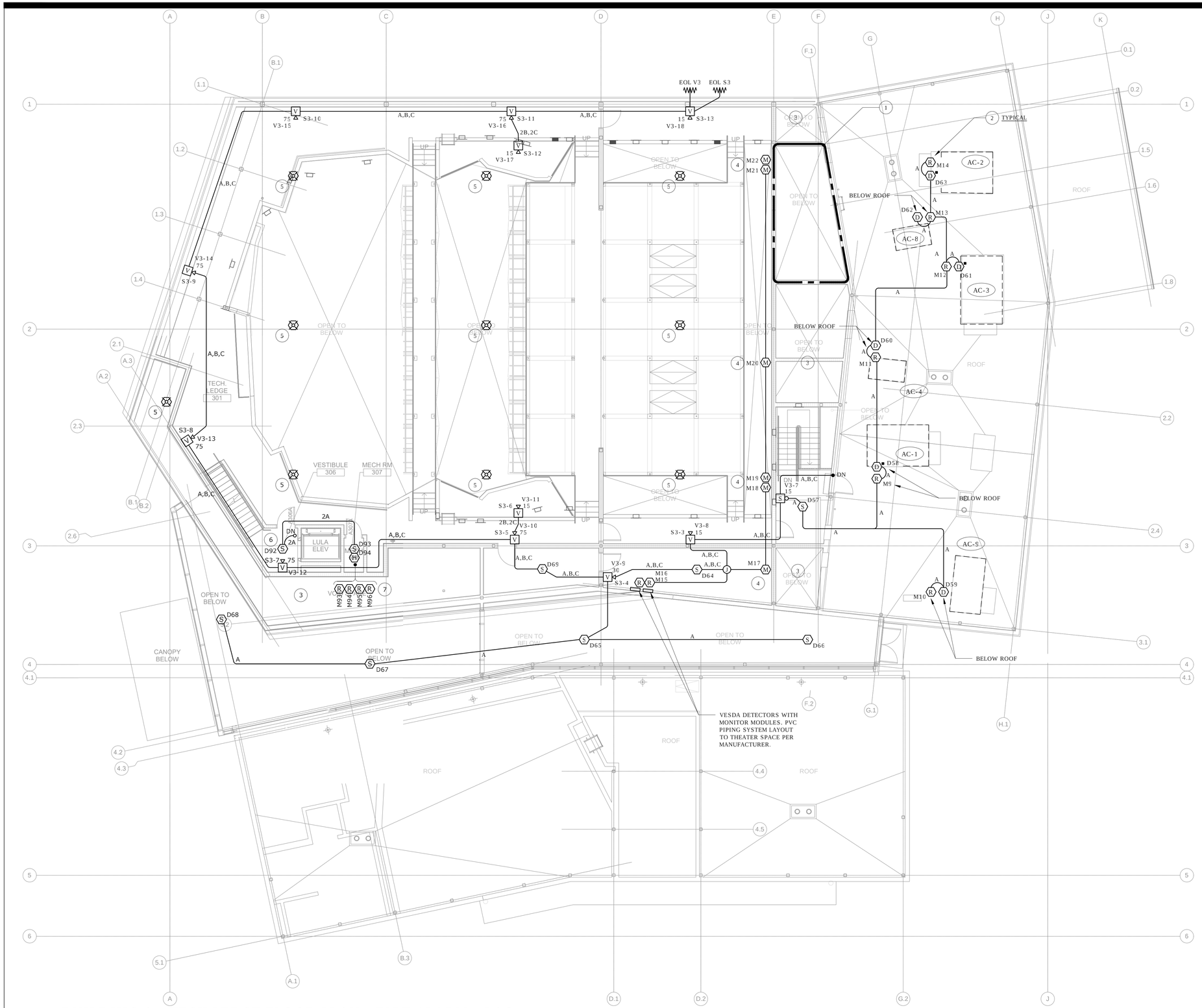

BUILDING A - TECH LEDGE FLOOR PLAN - FIRE ALARM - PAC

SCALE 1/8" = 1' - 0"

1 / FE-3.4

NUMBERED SHEET NOTES

1. SEE FE-3.1 FOR CEILING MOUNTED DEVICES IN THIS ROOM.
2. PROVIDE AND INSTALL RELAY MODULE TO FACILITATE AUTOMATIC SHUTDOWN OF MECHANICAL UNIT UPON ALARM. COORDINATE EXACT LOCATION WITH DIVISION 23 - MECHANICAL.
3. THIS ENCLOSED AREA IS FULLY SPRINKLERED AND THEREFORE DOES NOT REQUIRE FIRE ALARM DEVICES.
4. LOCATE MONITOR MODULE AT FIRE SMOKE DAMPER ASSEMBLY. SMOKE DETECTOR IS INTEGRAL TO UNIT. SEE MECHANICAL PLANS FOR EXACT LOCATIONS AND REQUIREMENTS, VERIFY PRIOR TO ROUGH-IN.
5. AIR SAMPLING DETECTION POINT.
6. ELEVATOR RECALL SMOKE DETECTOR - LOCATE WITHIN 3' OF ELEVATOR DOOR. REFER TO 3/E-5.3 FOR REQUIREMENTS.
7. ELEVATOR MACHINE ROOM RELAY MODULES - REFER TO 3/E-5.3 FOR REQUIREMENTS.

QUATTROCCHI KWOK ARCHITECTS
Main Office:
636 Fifth Street, Santa Rosa, CA 95404
Pleasanton Office:
600 Main Street, Suite E,
Pleasanton, CA 94566
(707) 576-0829

O'MAHONY & MYER
ELECTRICAL ENGINEERING and LIGHTING DESIGN
4340 REDWOOD HWY., SUITE 245
SAN RAFAEL, CALIFORNIA 94903
(415) 492-0420/FAX (415) 479-9662
www.ommconsulting.com

PAUL J. COLEMAN No. 14738 Exp. 6/21 REGISTERED PROFESSIONAL ENGINEER ELECTRICAL STATE OF CALIFORNIA

FREEDOM HIGH SCHOOL

PERFORMING ARTS AND CTE FACILITIES

1050 NEROLY RD
OAKLEY, CA 94561

LIBERTY UNION HIGH SCHOOL DISTRICT

1	DSA	2019

ARCH PROJECT NO: 1739.00
DRAWN BY: TV/LN/ME
DRAWING SCALE:
PTN: 61721-0068

BID SET

JUNE 28, 2019

SHEET TITLE

BUILDING A - TECH LEDGE FLOOR PLAN - FIRE ALARM - PAC

SHEET NUMBER

FE-A3.3

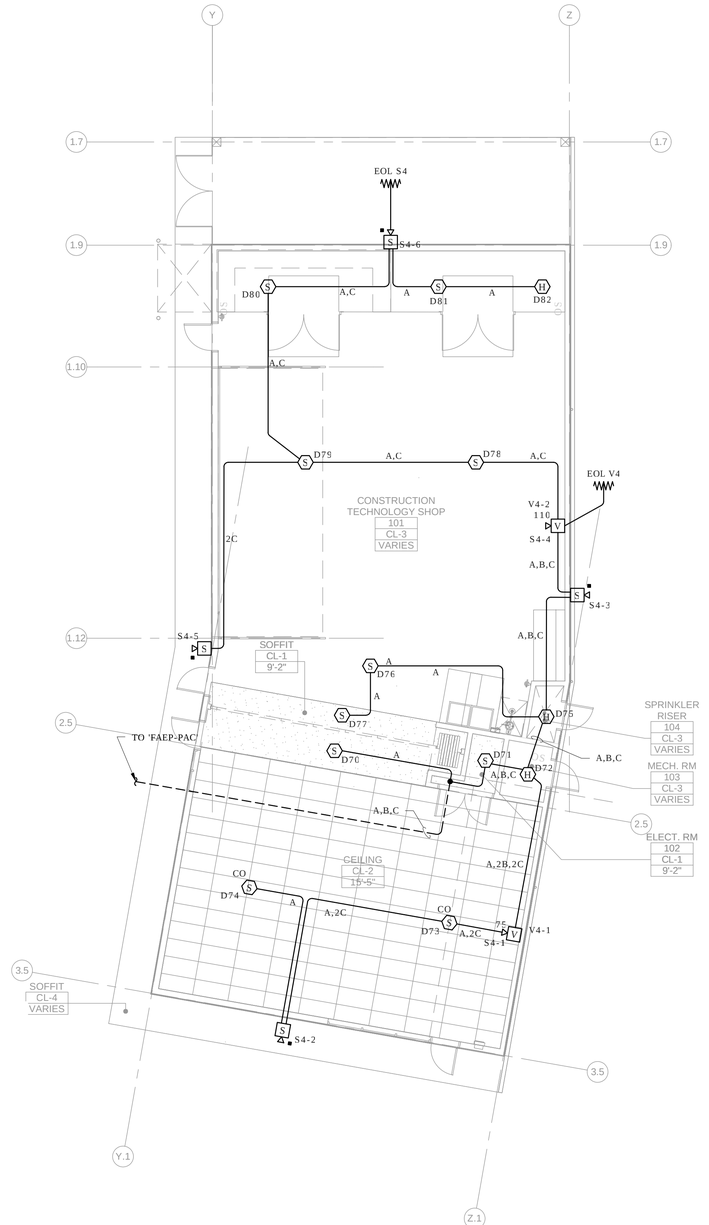

BUILDING B - 1ST FLOOR PLAN - FIRE ALARM - CTE

SCALE 1/8" = 1' - 0"

1 / E-B1

QUATTROCCHI KWOK
ARCHITECTS
Main Office:
636 Fifth Street, Santa Rosa, CA 95404
Pleasanton Office:
600 Main Street, Suite E,
Pleasanton, CA 94566
(707) 576-0829

O'MAHONY & MYER
ELECTRICAL ENGINEERING and LIGHTING DESIGN
4340 REDWOOD HWY., SUITE 245
SAN RAFAEL, CALIFORNIA 94903
(415) 492-0420/FAX (415) 479-9602
www.ommconsulting.com

REGISTERED PROFESSIONAL ENGINEER
PAUL J. COLEMAN
No. 14738
Exp. 6/21
ELECTRICAL
STATE OF CALIFORNIA

FREEDOM HIGH SCHOOL

PERFORMING ARTS AND CTE FACILITIES

1050 NEROLY RD
OAKLEY, CA 94561

LIBERTY UNION HIGH SCHOOL DISTRICT

1	DSA	2019

ARCH PROJECT NO: 1739.00
DRAWN BY: TV/LN/ME
DRAWING SCALE:
PTN: 61721-0068

BID SET

JUNE 28, 2019

SHEET TITLE

BUILDING B - FIRST FLOOR PLAN - FIRE ALARM - CTE

SHEET NUMBER

FE-B3.1

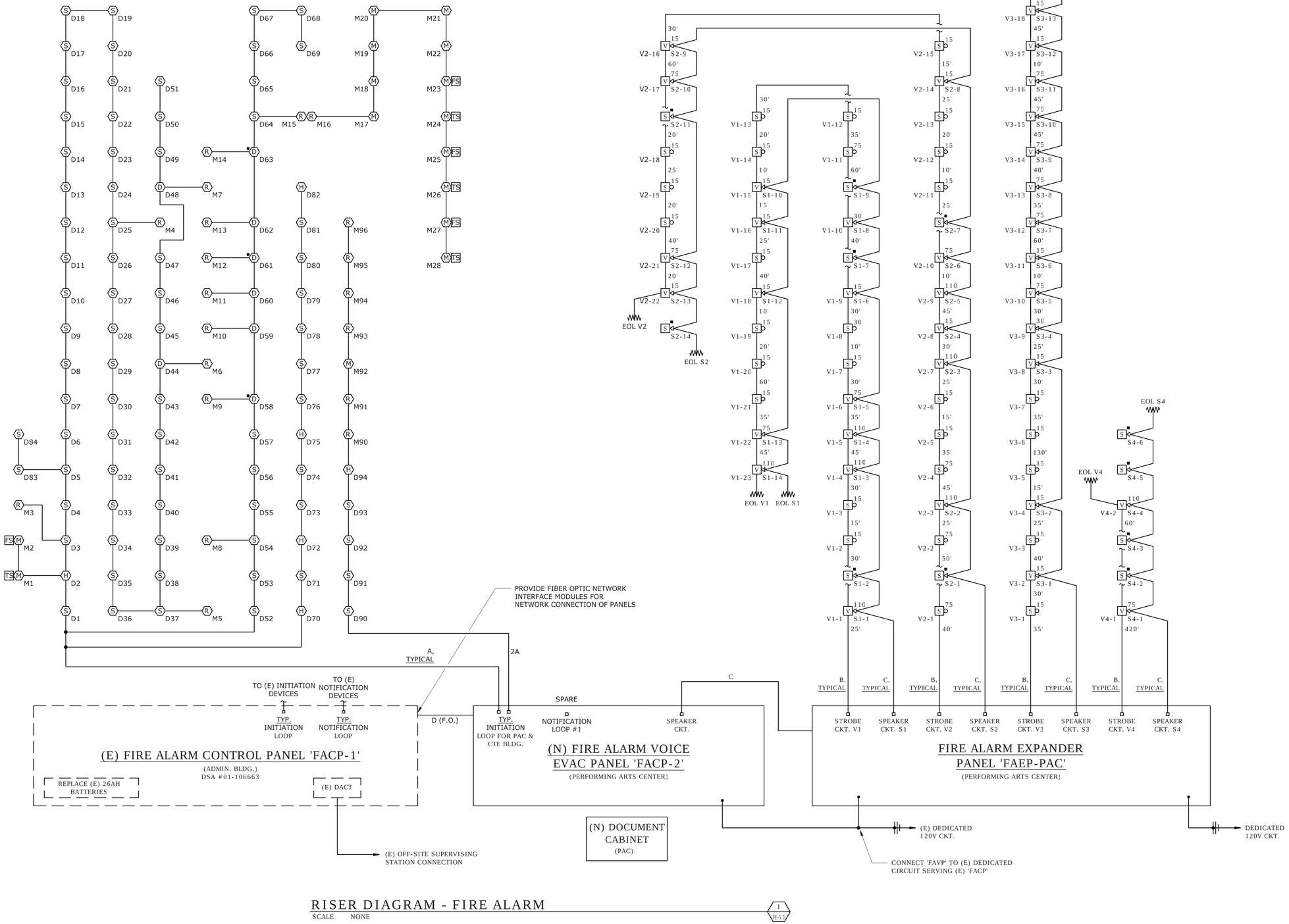

RISER DIAGRAM - FIRE ALARM

SCALE: NONE

1 / FE-5.1

QUATTROCCHI KWOK ARCHITECTS
Main Office:
636 Fifth Street, Santa Rosa, CA 95404
Pleasanton Office:
600 Main Street, Suite E,
Pleasanton, CA 94566
(707) 576-0829

O'MAHONY & MYER
ELECTRICAL ENGINEERING and LIGHTING DESIGN
4340 REDWOOD HWY., SUITE 245
SAN RAFAEL, CALIFORNIA 94903
(415) 492-0420/FAX (415) 479-9662
www.ommconsulting.com

REGISTERED PROFESSIONAL ENGINEER — PAUL J. COLEMAN — No. 14738 — Exp. 6/21 — ELECTRICAL — STATE OF CALIFORNIA

FREEDOM HIGH SCHOOL

PERFORMING ARTS AND CTE FACILITIES

1050 NEROLY RD
OAKLEY, CA 94561

LIBERTY UNION HIGH SCHOOL DISTRICT

	DSA	2019

ARCH PROJECT NO: 1739.00
DRAWN BY: TV/LN/ME
DRAWING SCALE:
PTN: 61721-0068

BID SET

JUNE 28, 2019

SHEET TITLE

RISER DIAGRAM - FIRE ALARM

SHEET NUMBER

FE-5.1

BATTERY CALCULATIONS: **FIRE ALARM VOICE EVAC PANEL 'FACP-2'**

STANDBY MODE

	EA (A)	QTY.	CURRENT
(E) CONTROL UNIT/LOADS	0.573	2	1.146
ANNUNCIATOR	0.087	1	0.087
REMOTE MIC	0.002	1	0.002
DETECTORS	0.0004	160	0.058
CO DETECTORS	0.0010	6	0.006
MODULES	0.0004	36	0.014

TOTAL STANDBY CURRENT = 1.313 A
REQUIRED (24 HOURS) = 31.504 AH

ALARM MODE

	EA (A)	QTY.	CURRENT
(E) CONTROL UNIT/LOADS	0.720	2	1.440
ANNUNCIATOR	0.087	1	0.087
REMOTE MIC	0.006	1	0.006
DETECTORS	0.001	160	0.160
CO DETECTORS	0.017	6	0.102
MODULES	0.006	36	0.216
1/2W SPEAKERS	0.032	8	0.256
1W SPEAKERS	0.064	1	0.064

TOTAL ALARM CURRENT = 2.331 A
REQUIRED (15 MIN) = 0.583 AH

TOTAL POWER REQUIRED WITH 120%
BATTERY DERATING FACTOR = **38.504 AH**

PROVIDE TWO 12V, 55AH BATTERIES
MOUNTED IN SEPARATE ENCLOSURE

BATTERY CALCULATIONS: **FIRE ALARM EXTENDER PANEL 'FAEP-PAC'**

STANDBY MODE

	EA (A)	QTY.	CURRENT
(E) FAEP CTRL UNIT	0.085	1	0.085

TOTAL STANDBY CURRENT = 0.085 A
REQUIRED (24 HOURS) = 2.040 AH

ALARM MODE

	EA (A)	QTY.	CURRENT
(E) FAEP CTRL UNIT	0.185	1	0.185
NOTIFICATION CKT V1	2.515	1	2.515
NOTIFICATION CKT V2	2.350	1	2.350
NOTIFICATION CKT V3	2.096	1	2.096
NOTIFICATION CKT V4	0.453	1	0.453

TOTAL POWER REQUIRED WITH 120%
BATTERY DERATING FACTOR = **2.448 AH**

REPLACE (E) WITH TWO 12V, 9AH BATTERIES

VOLTAGE DROP CALCULATIONS

FIRE ALARM EXPANDER PANEL 'FAEP-PAC'

SIGNAL CIRCUIT:	**V1**																							
TOTAL CKT CURRENT =	2.515 A																							
MAX VOLT-DROP =	**13.71%**																							
SYSTEM VOLTAGE =	20.4 V																							
Device Address-->	V1-1	V1-2	V1-3	V1-4	V1-5	V1-6	V1-7	V1-8	V1-9	V1-10	V1-11	V1-12	V1-13	V1-14	V1-15	V1-16	V1-17	V1-18	V1-19	V1-20	V1-21	V1-22	V1-23	
Type of Device -->	110wspst	15str	15str	110wspst	110wspst	75wspst	15str	30str	15wspst	30wspst	75str	15str	15str	15str	15wspst	15wspst	15str	15wspst	15str	15str	15str	75wspst	110wspst	eol
Current of Device (Amp) -->	0.224	0.067	0.067	0.224	0.224	0.165	0.067	0.111	0.053	0.084	0.207	0.067	0.067	0.067	0.053	0.053	0.067	0.053	0.067	0.067	0.067	0.165	0.224	0.005
Size of Wire (AWG) -->	#12	#12	#12	#12	#12	#12	#12	#12	#12	#12	#12	#12	#12	#12	#12	#12	#12	#12	#12	#12	#12	#12	#12	#12
Distance to each Device (Ft) -->	25	30	15	30	45	35	30	10	30	40	60	35	30	20	10	15	25	40	10	20	60	35	45	5
Current Total (Amp) -->	2.515	2.291	2.224	2.157	1.933	1.709	1.544	1.477	1.366	1.313	1.229	1.022	0.955	0.888	0.821	0.768	0.715	0.648	0.595	0.528	0.461	0.394	0.229	0.005
Device Volt-drop -->	1.19%	2.49%	3.12%	4.35%	5.99%	7.12%	8.00%	8.28%	9.05%	10.05%	11.44%	12.12%	12.66%	13.00%	13.15%	13.37%	13.71%	14.20%	14.31%	14.51%	15.04%	15.30%	15.49%	15.49%
Device Volt -->	20.2	19.9	19.8	19.5	19.2	18.9	18.8	18.7	18.6	18.4	18.1	17.9	17.8	17.7	17.7	17.7	17.6	17.5	17.5	17.4	17.3	17.3	17.2	17.2

SIGNAL CIRCUIT:	**V2**																					
TOTAL CKT CURRENT =	2.350 A																					
MAX VOLT-DROP =	**13.17%**																					
SYSTEM VOLTAGE =	20.4 V																					
Device Address-->	V2-1	V2-2	V2-3	V2-4	V2-5	V2-6	V2-7	V2-8	V2-9	V2-10	V2-11	V2-12	V2-13	V2-14	V2-15	V2-16	V2-17	V2-18	V2-19	V2-20	V2-21	V2-22		
Type of Device -->	110wspst	15str	15str	110wspst	110wspst	75wspst	15str	30str	15wspst	30wspst	75str	15str	15str	15str	15wspst	15wspst	15str	15wspst	15str	15str	15str	110wspst	eol	
Current of Device (Amp) -->	0.224	0.067	0.067	0.224	0.224	0.165	0.067	0.111	0.053	0.084	0.207	0.067	0.067	0.067	0.053	0.053	0.067	0.053	0.067	0.067	0.067	0.224	0.005	
Size of Wire (AWG) -->	#12	#12	#12	#12	#12	#12	#12	#12	#12	#12	#12	#12	#12	#12	#12	#12	#12	#12	#12	#12	#12	#12	#12	
Distance to each Device (Ft) -->	40	50	25	45	35	15	25	30	45	10	25	10	20	25	15	30	60	20	25	20	40	20	5	
Current Total (Amp) -->	2.350	2.126	2.059	1.992	1.768	1.544	1.379	1.312	1.201	1.148	1.064	0.857	0.790	0.723	0.656	0.603	0.550	0.483	0.430	0.363	0.296	0.229	0.005	
Device Volt-drop -->	1.78%	3.79%	4.76%	6.46%	7.63%	8.07%	8.72%	9.47%	10.49%	10.71%	11.21%	11.37%	11.67%	12.01%	12.20%	12.54%	13.17%	13.35%	13.55%	13.69%	13.91%	14.00%	14.00%	
Device Volt -->	20.0	19.6	19.4	19.1	18.8	18.8	18.6	18.5	18.3	18.2	18.1	18.1	18.0	17.9	17.9	17.8	17.7	17.7	17.6	17.6	17.6	17.5	17.5	

SIGNAL CIRCUIT:	**V3**																			
TOTAL CKT CURRENT =	2.096 A																			
MAX VOLT-DROP =	**12.79%**																			
SYSTEM VOLTAGE =	20.4 V																			
Device Address-->	V3-1	V3-2	V3-3	V3-4	V3-5	V3-6	V3-7	V3-8	V3-9	V3-10	V3-11	V3-12	V3-13	V3-14	V3-15	V3-16	V3-17	V3-18		
Type of Device -->	110wspst	15str	15str	110wspst	110wspst	75wspst	15str	30str	15wspst	30wspst	75str	15str	15str	15str	15wspst	15wspst	15str	110wspst	eol	
Current of Device (Amp) -->	0.224	0.067	0.067	0.224	0.224	0.165	0.067	0.111	0.053	0.084	0.207	0.067	0.067	0.067	0.053	0.053	0.067	0.224	0.005	
Size of Wire (AWG) -->	#12	#12	#12	#12	#12	#12	#12	#12	#12	#12	#12	#12	#12	#12	#12	#12	#12	#12	#12	
Distance to each Device (Ft) -->	35	30	40	25	15	130	35	30	25	30	10	60	35	40	45	45	10	45	5	
Current Total (Amp) -->	2.096	1.872	1.805	1.738	1.514	1.290	1.125	1.058	0.947	0.894	0.810	0.603	0.536	0.469	0.402	0.349	0.296	0.229	0.005	
Device Volt-drop -->	1.39%	2.45%	3.82%	4.64%	5.07%	8.24%	8.99%	9.59%	10.04%	10.54%	10.70%	11.38%	11.74%	12.09%	12.43%	12.73%	12.79%	12.98%	12.98%	
Device Volt -->	20.1	19.9	19.6	19.5	19.4	18.7	18.6	18.4	18.4	18.2	18.2	18.1	18.0	17.9	17.9	17.8	17.8	17.8	17.8	

SIGNAL CIRCUIT:	**V4**		
TOTAL CKT CURRENT =	0.453 A		
MAX VOLT-DROP =	**3.86%**		
SYSTEM VOLTAGE =	20.4 V		
Device Address-->	V4-1	V4-2	
Type of Device -->	110wspst	110wspst	eol
Current of Device (Amp) -->	0.224	0.224	0.005
Size of Wire (AWG) -->	#12	#12	#12
Distance to each Device (Ft) -->	420	60	5
Current Total (Amp) -->	0.453	0.229	0.005
Device Volt-drop -->	3.60%	3.86%	3.86%
Device Volt -->	19.7	19.6	19.6

QUATTROCCHI KWOK ARCHITECTS
Main Office:
636 Fifth Street, Santa Rosa, CA 95404
Pleasanton Office:
600 Main Street, Suite E,
Pleasanton, CA 94566
(707) 576-0829

O'MAHONY & MYER
ELECTRICAL ENGINEERING and LIGHTING DESIGN
4340 REDWOOD HWY., SUITE 245
SAN RAFAEL, CALIFORNIA 94903
(415) 492-0420/FAX (415) 479-9602
www.ommconsulting.com

PAUL J. COLEMAN No. 14738 Exp. 6/21 REGISTERED PROFESSIONAL ENGINEER ELECTRICAL STATE OF CALIFORNIA

FREEDOM HIGH SCHOOL

PERFORMING ARTS AND CTE FACILITIES

1050 NEROLY RD
OAKLEY, CA 94561

LIBERTY UNION HIGH SCHOOL DISTRICT

	DSA	2019

ARCH PROJECT NO: 1739.00
DRAWN BY: TV/LN/ME
DRAWING SCALE:
PTN: 61721-0068

BID SET

JUNE 28, 2019

SHEET TITLE

CALCULATIONS - FIRE ALARM

SHEET NUMBER

FE-6.1

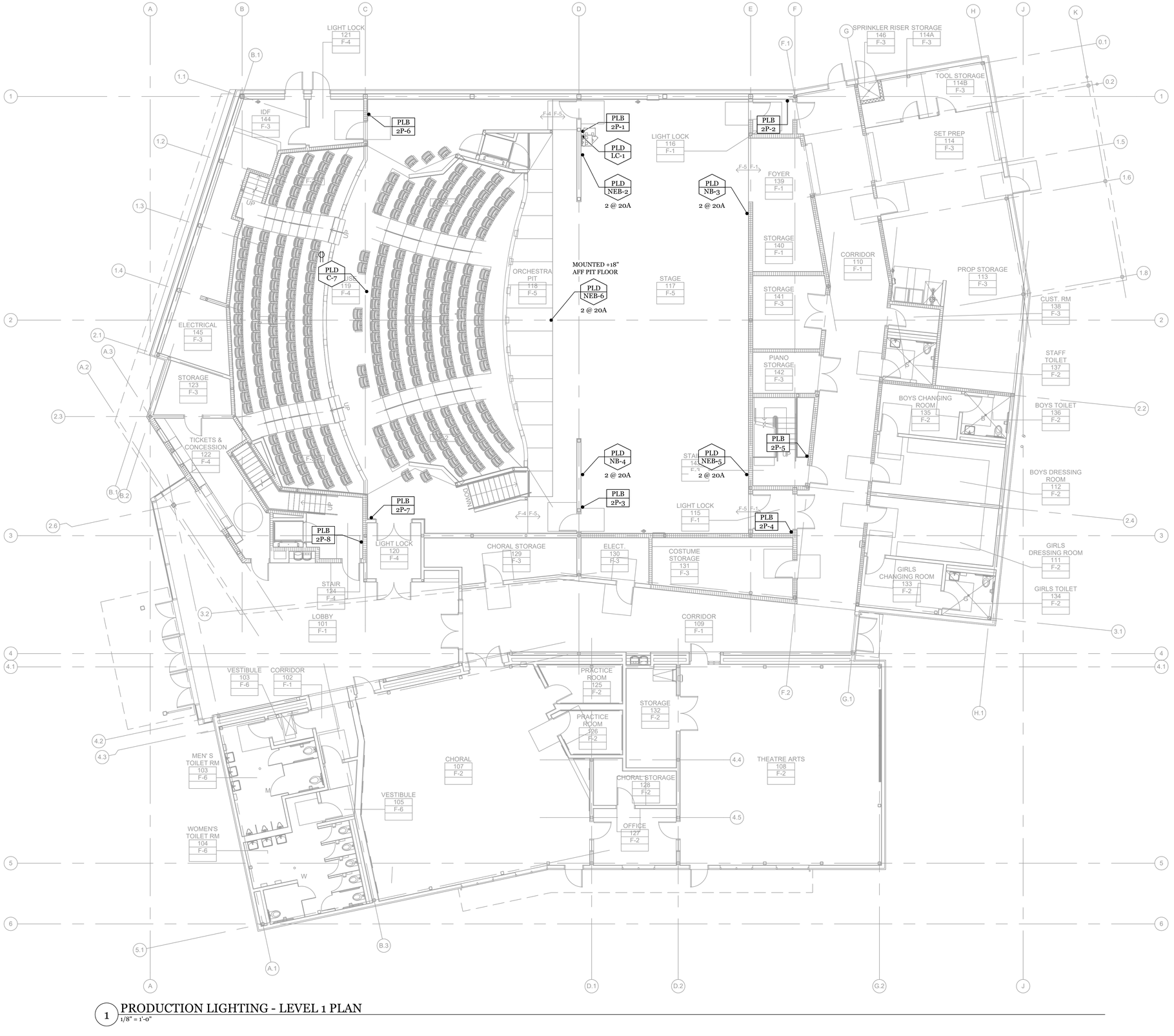

1 PRODUCTION LIGHTING - LEVEL 1 PLAN
1/8" = 1'-0"

PRODUCTION LIGHTING SYMBOL KEY

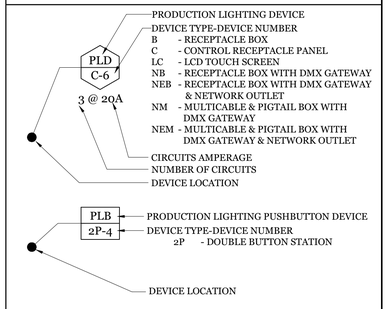

LIGHTING GENERAL NOTES

1. THIS SHEET IS INTENDED TO PROVIDE PRODUCTION LIGHTING SYSTEM INFORMATION ONLY. REFERENCE OTHER PRODUCTION SYSTEMS, ARCHITECTURAL AND ENGINEERING DOCUMENTS FOR RELATED AREAS.
2. REFERENCE SPECIFICATIONS AND ELECTRICAL DRAWINGS FOR DIVISION 26 INSTALLATION REQUIREMENTS
3. ALL CIRCUITS SHALL HAVE A DEDICATED HOMERUN UNLESS OTHERWISE INDICATED.
4. ALL CIRCUITS SHALL HAVE A DEDICATED NEUTRAL. ALL POWER DEVICE BOXES SHALL HAVE AT LEAST ONE DEDICATED GROUND HOMERUN TO THE DIMMER RACK.

ABBREVIATIONS

VIF = VERIFY IN FIELD	CLR = CLEAR
SAD = SEE ARCHITECTURAL DRAWINGS	HL = HOUSE LEFT
SSD = SEE STRUCTURAL DRAWINGS	HR = HOUSE RIGHT
SMD = SEE MECHANICAL DRAWINGS	SR = STAGE RIGHT
SED = SEE ELECTRICAL DRAWINGS	SL = STAGE LEFT
AFF = ABOVE FINISHED FLOOR	SIM. = SIMILAR
NIC = NOT IN CONTRACT	OPP. = OPPOSITE
HT = HEIGHT	NTS = NOT TO SCALE
TYP = TYPICAL	MIN = MINIMUM
RWL = RECOMMENDED WORKING LOAD	MAX = MAXIMUM
UON = UNLESS OTHERWISE NOTED	

QUATTROCCHI KWOK ARCHITECTS
Main Office:
636 Fifth Street, Santa Rosa, CA 95404
Pleasanton Office:
600 Main Street, Suite E,
Pleasanton, CA 94566
(707) 576-0829

LICENSED ARCHITECT
JIM THEISS
LICENSE # C22643
EXP JUNE 30, 2019
STATE OF CALIFORNIA

SIGNED: DECEMBER 14, 2018

The Shalleck Collaborative Inc.
Planning and Design of Theatres | Production Systems | AV
1533 Martin Luther King Jr Way
Berkeley, CA 94709
tel 415-956-2200
www.shalleck.com

FREEDOM HIGH SCHOOL

PERFORMING ARTS AND CTE FACILITIES

1050 NEROLY RD
OAKLEY, CA 94561

LIBERTY UNION HIGH SCHOOL DISTRICT

ARCH PROJECT NO: 1739.00
DRAWN BY:
DRAWING SCALE:
PTN: 61721-0068

BID SET

AUGUST 13, 2019

SHEET TITLE

PRODUCTION LIGHTING LEVEL 1 DEVICE PLANS

SHEET NUMBER

PL-1.01

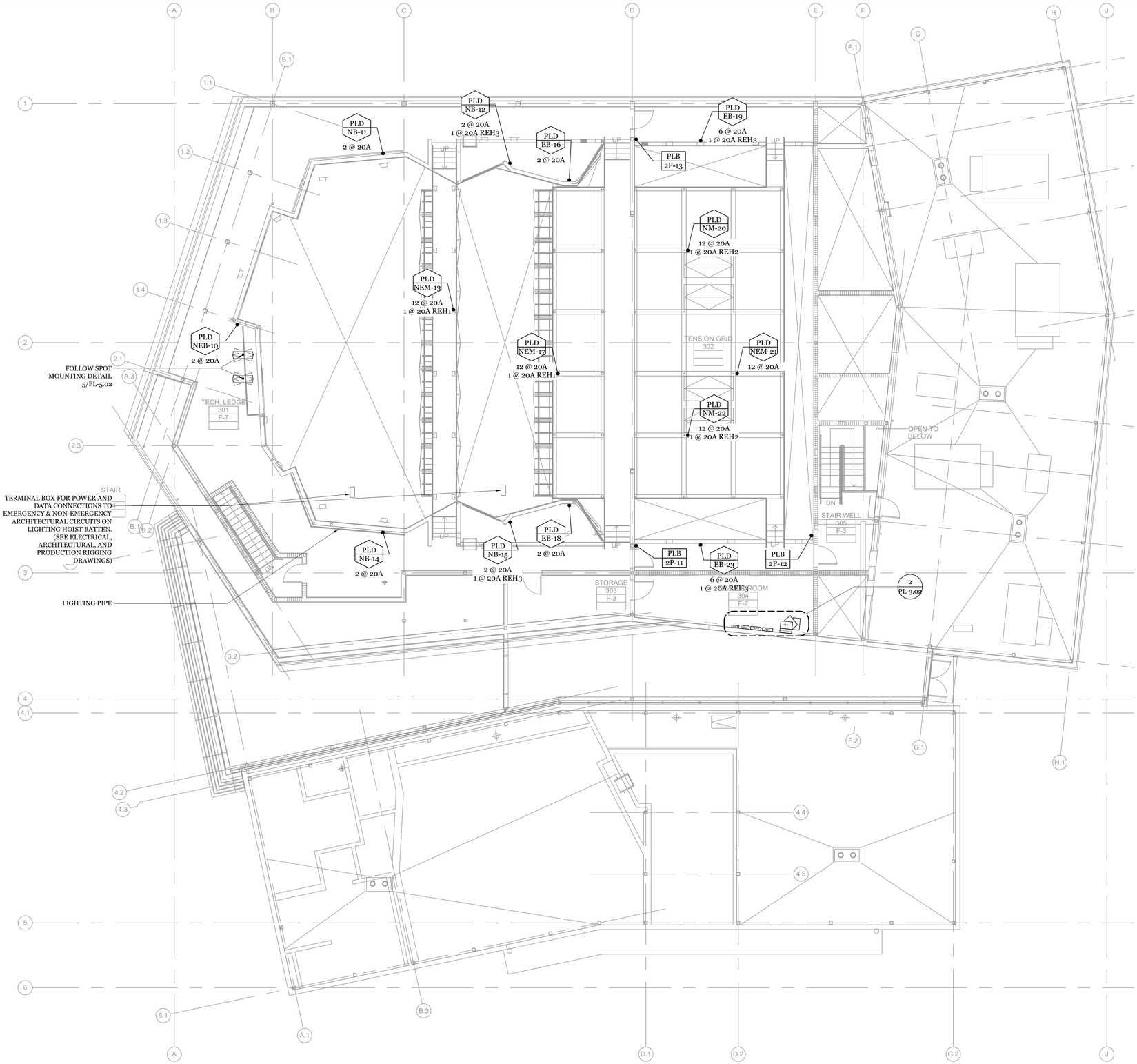

1 PRODUCTION LIGHTING - LEVEL 3 PLAN
1/8" = 1'-0"

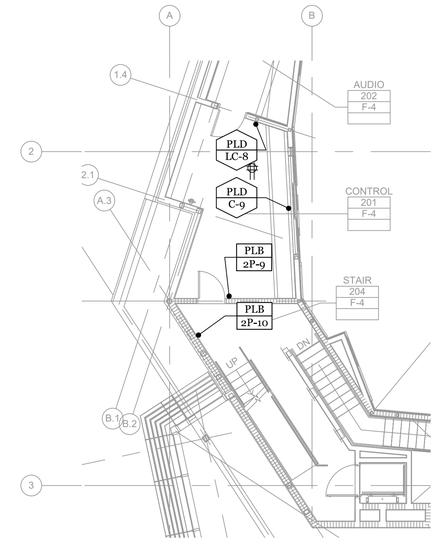

2 PRODUCTION LIGHTING PLAN AT BOOTH
1/8" = 1'-0"

PRODUCTION LIGHTING SYMBOL KEY

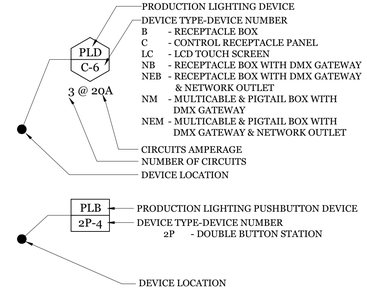

LIGHTING GENERAL NOTES

1. THIS SHEET IS INTENDED TO PROVIDE PRODUCTION LIGHTING SYSTEM INFORMATION ONLY. REFERENCE OTHER PRODUCTION SYSTEMS, ARCHITECTURAL AND ENGINEERING DOCUMENTS FOR RELATED AREAS.
2. REFERENCE SPECIFICATIONS AND ELECTRICAL DRAWINGS FOR DIVISION 26 INSTALLATION REQUIREMENTS
3. ALL CIRCUITS SHALL HAVE A DEDICATED HOMERUN UNLESS OTHERWISE INDICATED.
4. ALL CIRCUITS SHALL HAVE A DEDICATED NEUTRAL. ALL POWER DEVICE BOXES SHALL HAVE AT LEAST ONE DEDICATED GROUND HOMERUN TO THE DIMMER RACK.

ABBREVIATIONS

VIF = VERIFY IN FIELD
SAD = SEE ARCHITECTURAL DRAWINGS
SSD = SEE STRUCTURAL DRAWINGS
SMD = SEE MECHANICAL DRAWINGS
SED = SEE ELECTRICAL DRAWINGS
AFF = ABOVE FINISHED FLOOR
NIC = NOT IN CONTRACT
HT = HEIGHT
TYP = TYPICAL
RWL = RECOMMENDED WORKING LOAD
UON = UNLESS OTHERWISE NOTED
CLR = CLEAR
HL = HOUSE LEFT
HR = HOUSE RIGHT
SR = STAGE RIGHT
SL = STAGE LEFT
SIM. = SIMILAR
OPP. = OPPOSITE
NTS = NOT TO SCALE
MIN = MINIMUM
MAX = MAXIMUM

QUATTROCCHI KWOK ARCHITECTS
Main Office:
636 Fifth Street, Santa Rosa, CA 95404
Pleasanton Office:
600 Main Street, Suite E,
Pleasanton, CA 94566
(707) 576-0829

LICENSED ARCHITECT
JIM THEISS
LICENSE # C22643
EXP JUNE 30, 2019
STATE OF CALIFORNIA

SIGNED: DECEMBER 14, 2018

The Shalleck Collaborative Inc.
Planning and Design of Theatres | Production Systems | AV
1533 Martin Luther King Jr Way
Berkeley, CA 94709
tel 415-956-1000
www.shalleck.com

FREEDOM HIGH SCHOOL

PERFORMING ARTS AND CTE FACILITIES

1050 NEROLY RD
OAKLEY, CA 94561

LIBERTY UNION HIGH SCHOOL DISTRICT

ARCH PROJECT NO: 1739.00
DRAWN BY:
DRAWING SCALE:
PTN: 61721-0068

BID SET

AUGUST 13, 2019

SHEET TITLE

PRODUCTION LIGHTING LEVEL 3 DEVICE PLANS

SHEET NUMBER

PL-1.03

ALL CONDUIT FOR LOW VOLTAGE PLC DEVICES SHALL BE 1" MIN DIAMETER UNLESS OTHERWISE NOTED

ALL LOW VOLTAGE WIRE PROVIDED, INSTALLED, AND TERMINATED BY DIVISION 26.
STANDARD BACKBOXES PROVIDED BY DIVISION 26,
UNLESS SURFACE MOUNTED OR A CUSTOM SPECIALTY BOX

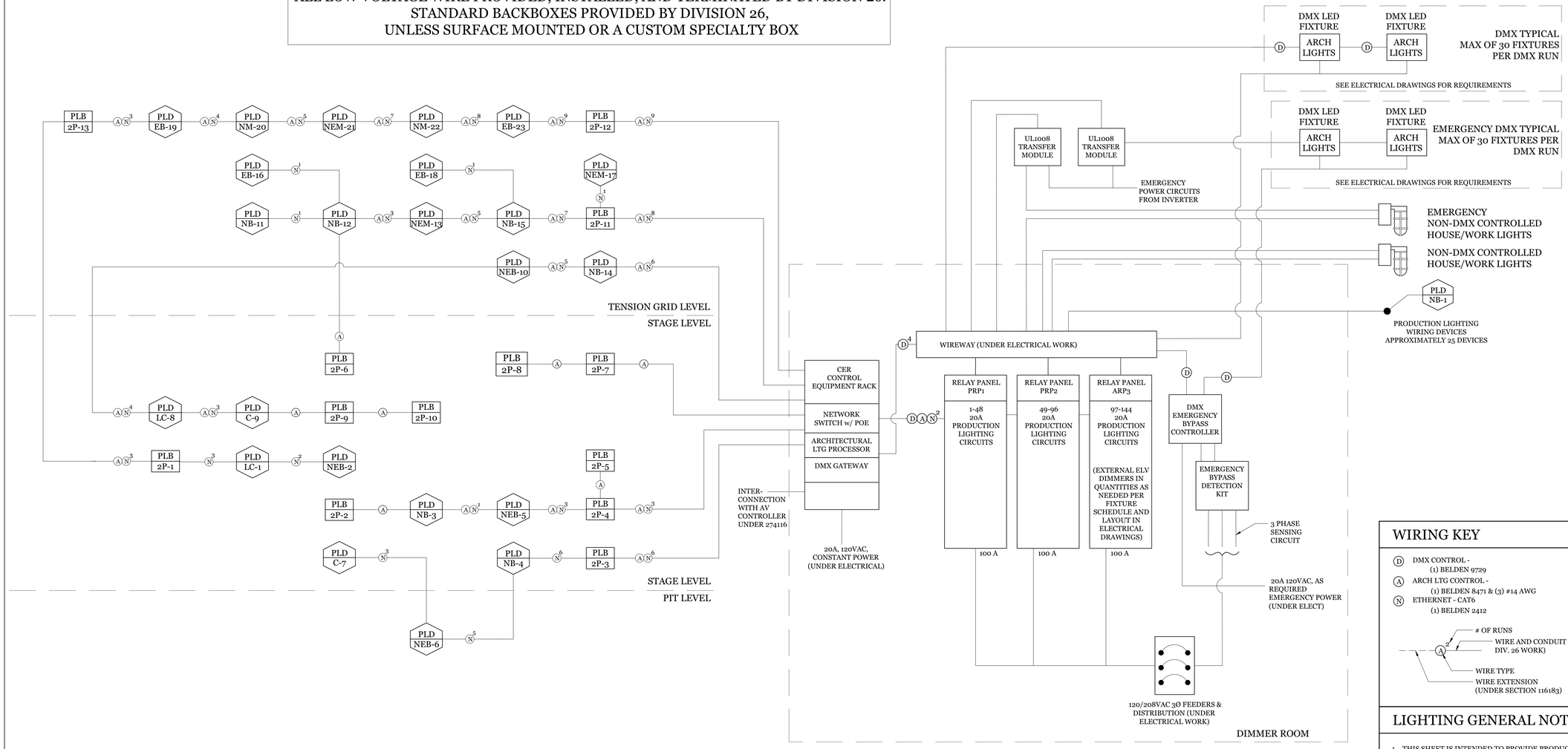

1 SINGLE LINE DIAGRAM

WIRING KEY

- (D) DMX CONTROL - (1) BELDEN 9729
- (A) ARCH LTG CONTROL - (1) BELDEN 8471 & (3) #14 AWG
- (N) ETHERNET - CAT6 (1) BELDEN 2412

LIGHTING GENERAL NOTES

1. THIS SHEET IS INTENDED TO PROVIDE PRODUCTION LIGHTING SYSTEM INFORMATION ONLY. REFERENCE OTHER PRODUCTION SYSTEMS, ARCHITECTURAL AND ENGINEERING DOCUMENTS FOR RELATED AREAS.
2. REFERENCE SPECIFICATIONS AND ELECTRICAL DRAWINGS FOR DIVISION 26 INSTALLATION REQUIREMENTS
3. ALL CIRCUITS SHALL HAVE A DEDICATED HOMERUN UNLESS OTHERWISE INDICATED.
4. ALL CIRCUITS SHALL HAVE A DEDICATED NEUTRAL. ALL POWER DEVICE BOXES SHALL HAVE AT LEAST ONE DEDICATED GROUND HOMERUN TO THE DIMMER RACK.

ABBREVIATIONS

VIF = VERIFY IN FIELD
SAD = SEE ARCHITECTURAL DRAWINGS
SSD = SEE STRUCTURAL DRAWINGS
SMD = SEE MECHANICAL DRAWINGS
SED = SEE ELECTRICAL DRAWINGS
AFF = ABOVE FINISHED FLOOR
NIC = NOT IN CONTRACT
HT = HEIGHT
TYP = TYPICAL
RWL = RECOMMENDED WORKING LOAD
UON = UNLESS OTHERWISE NOTED
CLR = CLEAR
HL = HOUSE LEFT
HR = HOUSE RIGHT
SR = STAGE RIGHT
SL = STAGE LEFT
SIM. = SIMILAR
OPP. = OPPOSITE
NTS = NOT TO SCALE
MIN = MINIMUM
MAX = MAXIMUM

QUATTROCCHI KWOK ARCHITECTS
Main Office:
636 Fifth Street, Santa Rosa, CA 95404
Pleasanton Office:
600 Main Street, Suite E,
Pleasanton, CA 94566
(707) 576-0829

LICENSED ARCHITECT
JIM THEISS
LICENSE # C22643
EXP JUNE 30, 2019
STATE OF CALIFORNIA

SIGNED: DECEMBER 14, 2018

The Shalleck Collaborative Inc.
Planning and Design of Theatres | Production Systems | AV
1533 Martin Luther King Jr Way
Berkeley, CA 94709
tel 415-956-0200
www.shalleck.com

FREEDOM HIGH SCHOOL

PERFORMING ARTS AND CTE FACILITIES

1050 NEROLY RD
OAKLEY, CA 94561

LIBERTY UNION HIGH SCHOOL DISTRICT

ARCH PROJECT NO: 1739.00
DRAWN BY:
DRAWING SCALE:
PTN: 61721-0068

BID SET

AUGUST 13, 2019

SHEET TITLE

PRODUCTION LIGHTING SINGLE LINE DIAGRAM

SHEET NUMBER

PL-3.01

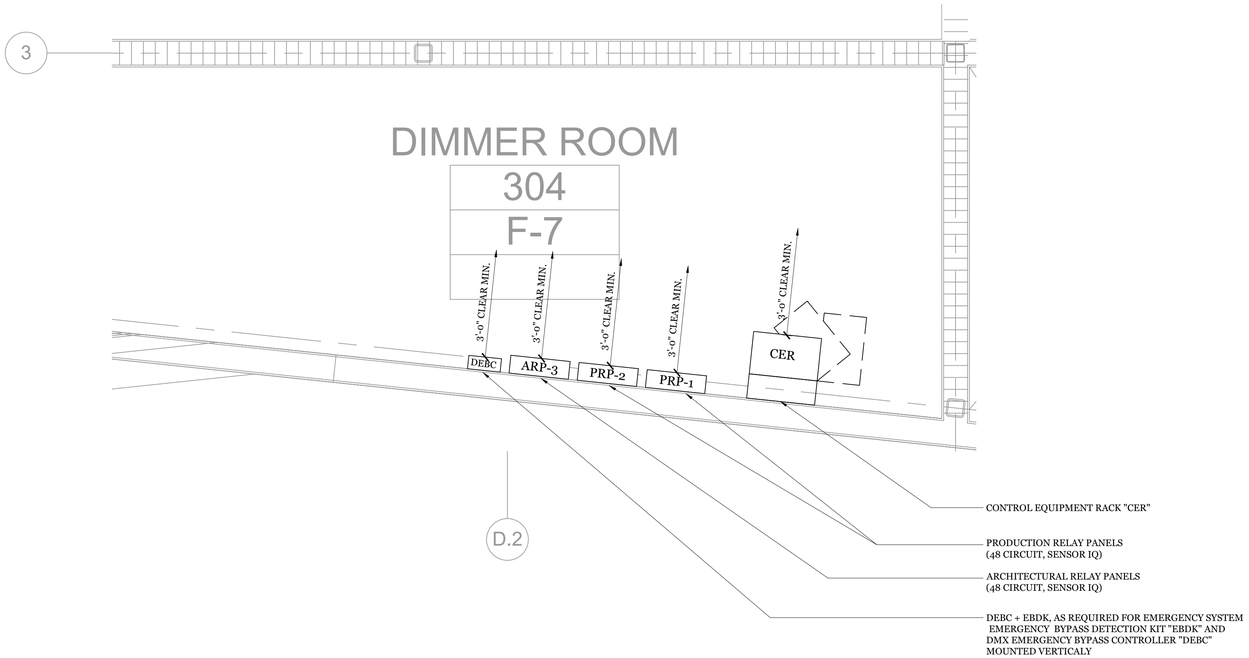

2 PRODUCTION LIGHTING DETAIL PLAN AT DIMMER ROOM

1/2" = 1'-0"

THEATRICAL LIGHTING PUSHBUTTON SCHEDULE

DEVICE TYPE	DEVICE NUMBER	DEVICE DETAIL	FINISH	MOUNTING REF	NOTES
2P	1	1/PL-5.01	BLACK	FM @ SWITCH HT	
2P	2	1/PL-5.01	BLACK	FM @ SWITCH HT	
2P	3	1/PL-5.01	BLACK	FM @ SWITCH HT	
2P	4	1/PL-5.01	BLACK	FM @ SWITCH HT	
2P	5	1/PL-5.01	BLACK	FM @ SWITCH HT	
2P	6	1/PL-5.01	BY ARCH	FM @ SWITCH HT	
2P	7	1/PL-5.01	BY ARCH	FM @ SWITCH HT	
2P	8	1/PL-5.01	BY ARCH	FM @ SWITCH HT	
2P	9	1/PL-5.01	BLACK	FM @ SWITCH HT	
2P	10	1/PL-5.01	BLACK	FM @ SWITCH HT	
2P	11	1/PL-5.01	BLACK	FM @ SWITCH HT	
2P	12	1/PL-5.01	BLACK	FM @ SWITCH HT	
2P	13	1/PL-5.01	BLACK	FM @ SWITCH HT	

THEATRICAL LIGHTING DEVICE SCHEDULE

DEVICE TYPE	DEVICE NUMBER	NETWORK: 1-PORT-GATEWAY-IN	NETWORK: 1-PORT-GATEWAY-OUT	NETWORK: 2-PORT-GATEWAY-IN	NETWORK: 2-PORT-GATEWAY-IN-OUT	NETWORK: 2-PORT-GATEWAY-OUT	NETWORK: NETWORK-OUTLET	NETWORK: TAP-ID	RELAY CIR.: CIRCUIT QTY	RELAY CIR.: CIRCUIT #	DUPLEX	QUAD	DEVICE DETAIL	FINISH	MOUNTING REF	NOTES
LC	1												4/PL-5.01	BLACK	RACKMOUNT	
NEB	2		1				1		2	83-84			5/PL-5.01	BLACK	FM @ +18" AFF	
NB	3		1						2	87-88			6/PL-5.01	BLACK	FM @ +18" AFF	
NB	4		1						2	81-82			6/PL-5.01	BLACK	FM @ +18" AFF	
NEB	5		1				1		2	85-86			5/PL-5.01	BLACK	FM @ +18" AFF	
NEB	6		1				1		2	89-90			5/PL-5.01	BLACK	SM @ +18 AFF (ORCH. PIT)	
C	7	1					2				1		2/PL-5.01	BLACK	1/PL-5.02	
LC	8												3/PL-5.01	BLACK	FM @ SWITCH HT	
C	9	1					2				1		2/PL-5.01	BLACK	FM @ OUTLET HT	
NEB	10		1				1		2	95-96			5/PL-5.01	BLACK	FM @ +18" AFF	
NB	11		1						2	93-94			6/PL-5.01	BLACK	FM @ +18" AFF	
NB	12		1						2	29-30			6/PL-5.01	BLACK	FM @ +18" AFF	
NEM	13		1				1		12	1-12			9/PL-5.02	BLACK	3/PL-5.02	
NB	14		1						2	91-92			6/PL-5.01	BLACK	FM @ +18" AFF	
NB	15		1						2	25-26			6/PL-5.01	BLACK	FM @ +18" AFF	
EB	16								2	31-32			7/PL-5.01	BLACK	FM @ +18" AFF	
NEM	17		1						12	13-24			9/PL-5.01	BLACK	3/PL-5.02	
EB	18								2	27-28			7/PL-5.01	BLACK	FM @ +18" AFF	
EB	19		1						6	75-80			7/PL-5.01	BLACK	3/PL5.02	
NM	20		1						12	45-56			8/PL-5.01	BLACK	3/PL5.02	
NEM	21		1				1		12	57-68			9/PL-5.01	BLACK	3/PL5.02	
NM	22		1						12	33-44			8/PL-5.01	BLACK	3/PL5.02	
EB	23		1						6	69-74			7/PL-5.01	BLACK	3/PL5.02	

1 PRODUCTION LIGHTING SCHEDULES

-

THEATRICAL RELAY PANEL 'ARP3' SCHEDULE

CONTROL ZONE DESIGNATION	RELAY	DMX ADDRESS	LOAD VA	LOAD TYPE	ROOM NAME / FIXTURE TYPE
aa	1		67	0-10V	HOUSE / STEPLIGHTS
ab	2		718	DMX	HOUSE SIDE WALLS / WALLWASHERS
*ac	3		33	DMX	HOUSE / DOWNLIGHTS
ad	4		158	DMX	CIRCULATION / STORAGE OFF STAGE
ae	5		53	0-10V	STAGE / STEPLIGHTS
af	6		29	0-10V	ORCHESTRA PIT / STEPLIGHTS
ag	7		396	DMX	AUDITORIUM UNDER CATWALK
ah	8		19	0-10V	AUDITORIUM LIGHT LOCKS / STEPLIGHTS
*ai	9		33	DMX	STAGE LIGHT LOCKS / DOWNLIGHTS
aj	10		19	0-10V	STAGE LIGHT LOCKS / STEPLIGHTS
*ak	11		49	DMX	AUDITORIUM LIGHT LOCKS / DOWNLIGHTS
al	12		96	0-10V	AUDITORIUM TECH LEDGE / STEPLIGHTS
am	13		19	0-10V	STAGE TECH LEDGE / STEPLIGHTS
an	14		480	DMX	BACK OF AUDITORIUM / PENDANTS
ao	15		600	DMX	FRONT OF AUDITORIUM / DOWNLIGHTS
ap	16		2814	0-10V	STAGE / WORKLIGHTS
aq	17		163	0-10V	CATWALK / WORKLIGHTS
ar	18		572	0-10V	TECH LEDGE / WORKLIGHTS
as	19		43	0-10V	STAGE STAIRWELL / STEPLIGHTS
at	20		29	0-10V	CONTROL BOOTH / AUDIO BOOTH STEPLIGHTS
au	21		5	0-10V	AUDITORIUM STAIRWELL / STEPLIGHTS
av	22		19	0-10V	ORCHESTRA PIT / STAIR LIGHTS
*aw	23		66	DMX	AUDITORIUM ACCESS LIFT LIGHTS
*ax	24		153	0-10V	AUDITORIUM STAIRWELL
*ay	25		153	0-10V	STAGE STAIRWELL
az	26		240	SWITCHED	SEAT LIGHTS
ba	27		176	DMX	SPARE
bb	28		353	DMX	AUDITORIUM SR BACK SIDEWALL
bc	29		176	DMX	AUDITORIUM BACK WALL
bd	30		353	DMX	AUDITORIUM BACK WALL
be	31		353	DMX	AUDITORIUM BACK WALL
bf	32		10	0-10V	STAGE FOYER STEP LIGHTS
bg	33		16	0-10V	ELEVATOR DOWNLIGHT
bh	34		529	DMX	AUDITORIUM BACK WALL
bi	35		176	DMX	AUDITORIUM BACK WALL
bj	36		176	DMX	AUDITORIUM BACK WALL
bk	37		353	DMX	AUDITORIUM SL BACK REAR SIDEWALL
bl	38		353	DMX	AUDITORIUM SR BACK SIDEWALL
bm	39		706	DMX	AUDITORIUM FRONT SIDEWALL
bn	40		353	DMX	AUDITORIUM FRONT SIDEWALL
bo	41		176	DMX	SPARE
bp	42		50	DMX	AUDIO ROOM WALLWASH
bq	43		19	0-10V	TECH LEDGE STEPLIGHTS
*br	44		66	DMX	STAGE FOYER DOWNLIGHT
	45				SPARE
	46				SPARE
	47				SPARE
	48				SPARE

* NORMAL/EMERGENCY ZONE - SEE 1/E-5.4 & 1/E-PL5.01 FOR POWER & CONTROL WIRING

3 THEATRICAL REALY PANEL "ARP-3" SCHEDULE

-

LIGHTING GENERAL NOTES

1. THIS SHEET IS INTENDED TO PROVIDE PRODUCTION LIGHTING SYSTEM INFORMATION ONLY. REFERENCE OTHER PRODUCTION SYSTEMS, ARCHITECTURAL AND ENGINEERING DOCUMENTS FOR RELATED AREAS.
2. REFERENCE SPECIFICATIONS AND ELECTRICAL DRAWINGS FOR DIVISION 26 INSTALLATION REQUIREMENTS
3. ALL CIRCUITS SHALL HAVE A DEDICATED HOMERUN UNLESS OTHERWISE INDICATED.
4. ALL CIRCUITS SHALL HAVE A DEDICATED NEUTRAL. ALL POWER DEVICE BOXES SHALL HAVE AT LEAST ONE DEDICATED GROUND HOMERUN TO THE DIMMER RACK.

ABBREVIATIONS

VIF = VERIFY IN FIELD
SAD = SEE ARCHITECTURAL DRAWINGS
SSD = SEE STRUCTURAL DRAWINGS
SMD = SEE MECHANICAL DRAWINGS
SED = SEE ELECTRICAL DRAWINGS
AFF = ABOVE FINISHED FLOOR
NIC = NOT IN CONTRACT
HT = HEIGHT
TYP = TYPICAL
RWL = RECOMMENDED WORKING LOAD
UON = UNLESS OTHERWISE NOTED
CLR = CLEAR
HL = HOUSE LEFT
HR = HOUSE RIGHT
SR = STAGE RIGHT
SL = STAGE LEFT
SIM. = SIMILAR
OPP. = OPPOSITE
NTS = NOT TO SCALE
MIN = MINIMUM
MAX = MAXIMUM

QUATTROCCHI KWOK ARCHITECTS
Main Office:
636 Fifth Street, Santa Rosa, CA 95404
Pleasanton Office:
600 Main Street, Suite E,
Pleasanton, CA 94566
(707) 576-0829

LICENSED ARCHITECT
JIM THEISS
LICENSE # C22643
EXP JUNE 30, 2019
STATE OF CALIFORNIA

SIGNED: DECEMBER 14, 2018

The Shalleck Collaborative Inc.
Planning and Design of Theatres | Production Systems | AV
1533 Martin Luther King Jr Way
Berkeley, CA 94709
tel 415-956-0200
www.shalleck.com

FREEDOM HIGH SCHOOL

PERFORMING ARTS AND CTE FACILITIES

1050 NEROLY RD
OAKLEY, CA 94561

LIBERTY UNION HIGH SCHOOL DISTRICT

ARCH PROJECT NO: 1739.00
DRAWN BY:
DRAWING SCALE:
PTN: 61721-0068

BID SET

AUGUST 13, 2019

SHEET TITLE

PRODUCTION LIGHTING DEVICE SCHEDULE

SHEET NUMBER

PL-3.02

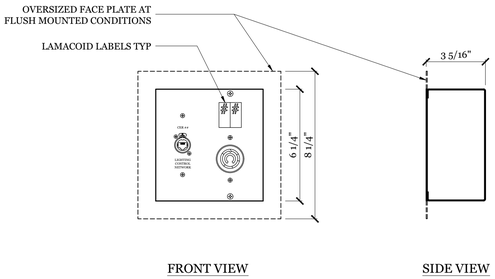

SEE SCHEDULE FOR CIRCUIT QUANTITY

7 PLD TYPE "EB" DEVICE

3" = 1'-0" — THIS DEVICE WEIGHS LESS THAN 20#

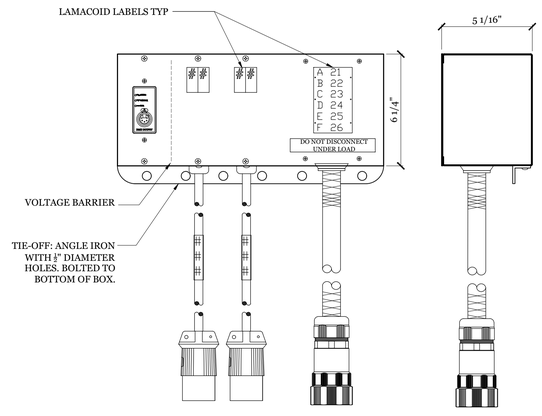

SEE SCHEDULE FOR CIRCUIT QUANTITY

8 PLD TYPE "NM" DEVICE

3" = 1'-0" — THIS DEVICE WEIGHS LESS THAN 20#

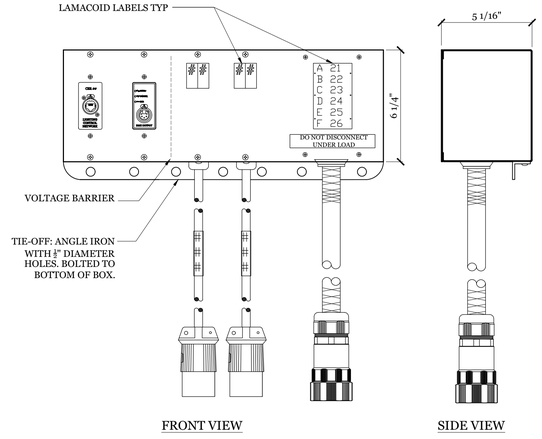

SEE SCHEDULE FOR CIRCUIT QUANTITY

9 PLD TYPE "NEM" DEVICE

3" = 1'-0" — THIS DEVICE WEIGHS LESS THAN 20#

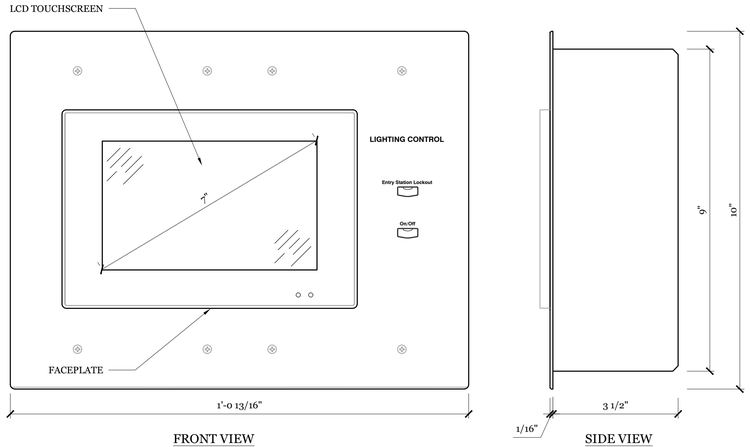

3 PLD TYPE "LC" DEVICE @ WALL MOUNT LOCATION

HALF FULL SIZE — THIS DEVICE WEIGHS LESS THAN 20#

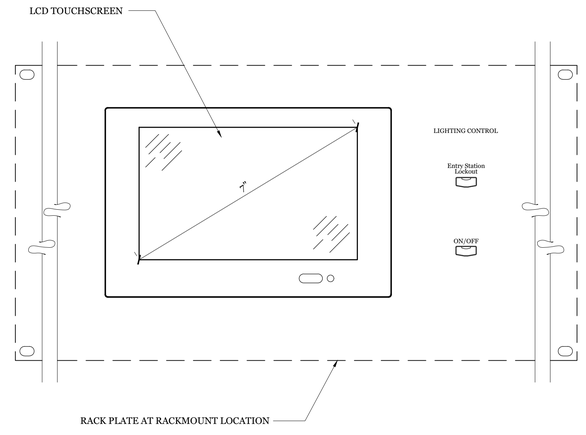

4 PLD TYPE "LC" DEVICE @ RACKMOUNT LOCATION

HALF FULL SIZE — THIS DEVICE WEIGHS LESS THAN 20#

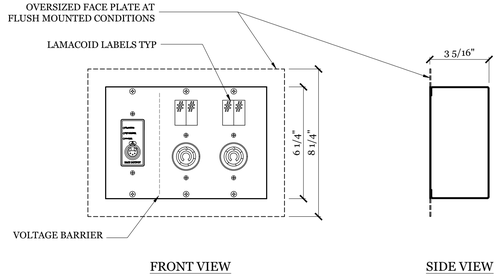

SEE SCHEDULE FOR CIRCUIT QUANTITY

6 PLD TYPE "NB" DEVICE

3" = 1'-0" — THIS DEVICE WEIGHS LESS THAN 20#

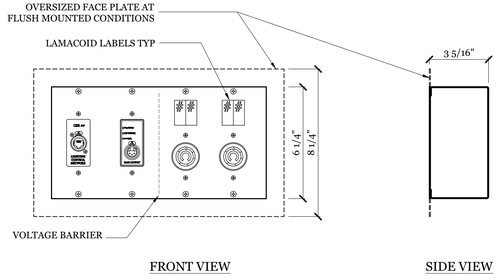

SEE SCHEDULE FOR CIRCUIT QUANTITY

5 PLD TYPE "NEB" DEVICE

3" = 1'-0" — THIS DEVICE WEIGHS LESS THAN 20#

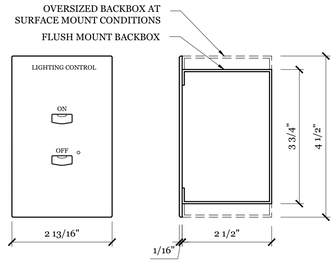

1 PLB DEVICE "2P"

HALF FULL SCALE — THIS DEVICE WEIGHS LESS THAN 20#

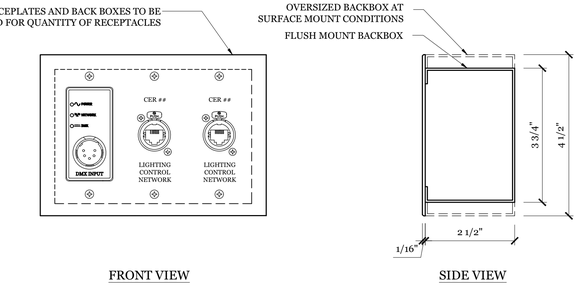

SEE SCHEDULE FOR DEVICE RECEPTACLE TYPES AND QUANTITY

2 PLD TYPE "C" DEVICE

HALF FULL SCALE — THIS DEVICE WEIGHS LESS THAN 20#

LIGHTING GENERAL NOTES

1. THIS SHEET IS INTENDED TO PROVIDE PRODUCTION LIGHTING SYSTEM INFORMATION ONLY. REFERENCE OTHER PRODUCTION SYSTEMS, ARCHITECTURAL AND ENGINEERING DOCUMENTS FOR RELATED AREAS.
2. REFERENCE SPECIFICATIONS AND ELECTRICAL DRAWINGS FOR DIVISION 26 INSTALLATION REQUIREMENTS
3. ALL CIRCUITS SHALL HAVE A DEDICATED HOMERUN UNLESS OTHERWISE INDICATED.
4. ALL CIRCUITS SHALL HAVE A DEDICATED NEUTRAL. ALL POWER DEVICE BOXES SHALL HAVE AT LEAST ONE DEDICATED GROUND HOMERUN TO THE DIMMER RACK.

ABBREVIATIONS

VIF = VERIFY IN FIELD
SAD = SEE ARCHITECTURAL DRAWINGS
SSD = SEE STRUCTURAL DRAWINGS
SMD = SEE MECHANICAL DRAWINGS
SED = SEE ELECTRICAL DRAWINGS
AFF = ABOVE FINISHED FLOOR
NIC = NOT IN CONTRACT
HT = HEIGHT
TYP = TYPICAL
RWL = RECOMMENDED WORKING LOAD
UON = UNLESS OTHERWISE NOTED
CLR = CLEAR
HL = HOUSE LEFT
HR = HOUSE RIGHT
SR = STAGE RIGHT
SL = STAGE LEFT
SIM. = SIMILAR
OPP. = OPPOSITE
NTS = NOT TO SCALE
MIN = MINIMUM
MAX = MAXIMUM

QUATTROCCHI KWOK ARCHITECTS
Main Office:
636 Fifth Street, Santa Rosa, CA 95404
Pleasanton Office:
600 Main Street, Suite E,
Pleasanton, CA 94566
(707) 576-0829

LICENSED ARCHITECT
JIM THEISS
LICENSE # C22643
EXP JUNE 30, 2019
STATE OF CALIFORNIA

SIGNED: DECEMBER 14, 2018

The Shalleck Collaborative Inc.
Planning and Design of Theatres | Production Systems | AV
1533 Martin Luther King Jr Way
Berkeley, CA 94709
tel 415-956-1000
www.shalleck.com

FREEDOM HIGH SCHOOL

PERFORMING ARTS AND CTE FACILITIES

1050 NEROLY RD
OAKLEY, CA 94561

LIBERTY UNION HIGH SCHOOL DISTRICT

ARCH PROJECT NO: 1739.00
DRAWN BY:
DRAWING SCALE:
PTN: 61721-0068

BID SET

AUGUST 13, 2019

SHEET TITLE

PRODUCTION LIGHTING DEVICE DETAILS

SHEET NUMBER

PL-5.01

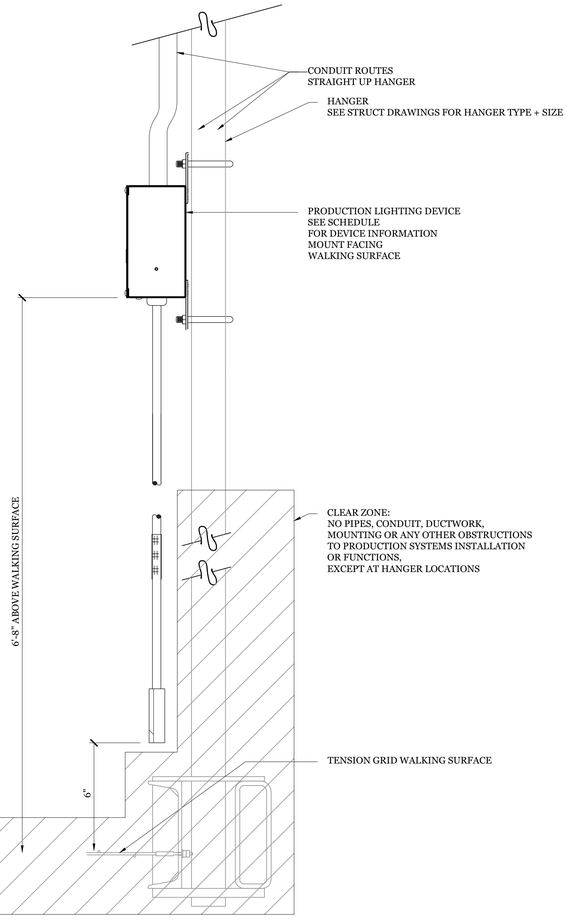

3 PIGTAIL BOX HANGER MOUNTING DETAIL
3"=1'-0"
THIS DEVICE WEIGHS LESS THAN 20#

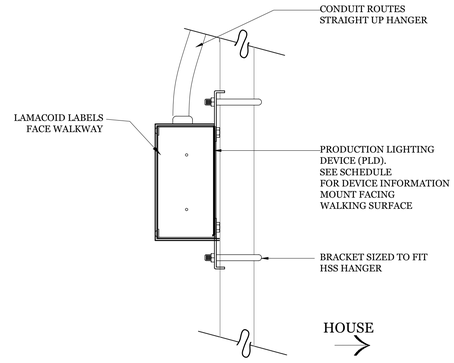

2 RECEPTACLE BOX HANGER MOUNTING DETAIL
3"=1'-0"
THIS DEVICE WEIGHS LESS THAN 20#

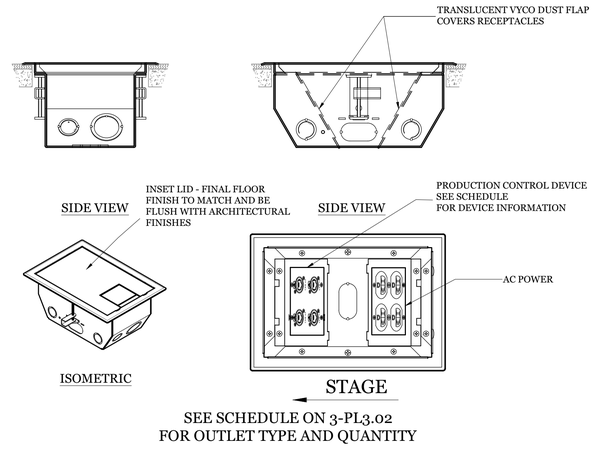

SEE SCHEDULE ON 3-PL3.02
FOR OUTLET TYPE AND QUANTITY

1 PLC TYPE "FB" - FLOOR BOX
3"=1'-0"
THIS DEVICE WEIGHS LESS THAN 20#

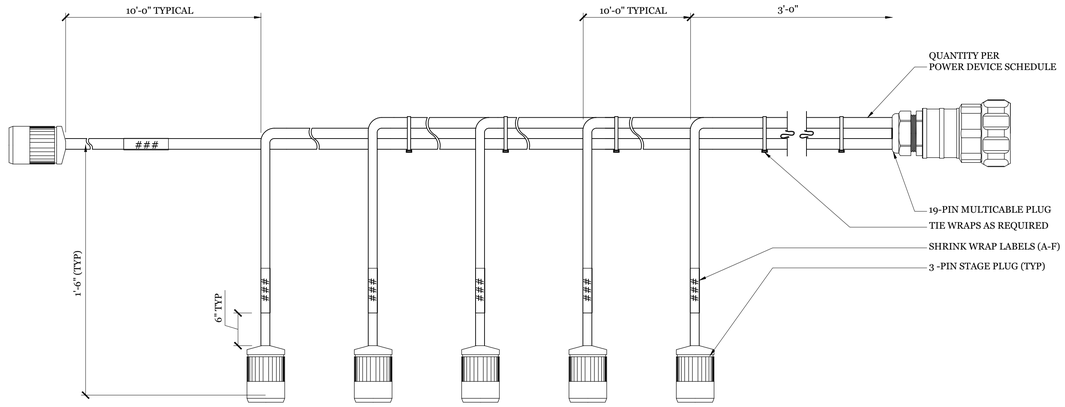

4 MULTI-CABLE FAN OUT
3"=1'-0"
THIS DEVICE WEIGHS LESS THAN 20#

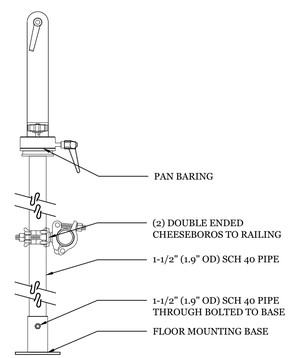

5 FOLLOW SPOT MOUNTING
1-1/2" = 1'-0"

LIGHTING GENERAL NOTES

1. THIS SHEET IS INTENDED TO PROVIDE PRODUCTION LIGHTING SYSTEM INFORMATION ONLY. REFERENCE OTHER PRODUCTION SYSTEMS, ARCHITECTURAL AND ENGINEERING DOCUMENTS FOR RELATED AREAS.
2. REFERENCE SPECIFICATIONS AND ELECTRICAL DRAWINGS FOR DIVISION 26 INSTALLATION REQUIREMENTS
3. ALL CIRCUITS SHALL HAVE A DEDICATED HOMERUN UNLESS OTHERWISE INDICATED.
4. ALL CIRCUITS SHALL HAVE A DEDICATED NEUTRAL. ALL POWER DEVICE BOXES SHALL HAVE AT LEAST ONE DEDICATED GROUND HOMERUN TO THE DIMMER RACK.

ABBREVIATIONS

VIF = VERIFY IN FIELD	CLR = CLEAR
SAD = SEE ARCHITECTURAL DRAWINGS	HL = HOUSE LEFT
SSD = SEE STRUCTURAL DRAWINGS	HR = HOUSE RIGHT
SMD = SEE MECHANICAL DRAWINGS	SR = STAGE RIGHT
SED = SEE ELECTRICAL DRAWINGS	SL = STAGE LEFT
AFF = ABOVE FINISHED FLOOR	SIM. = SIMILAR
NIC = NOT IN CONTRACT	OPP. = OPPOSITE
HT = HEIGHT	NTS = NOT TO SCALE
TYP = TYPICAL	MIN = MINIMUM
RWL = RECOMMENDED WORKING LOAD	MAX = MAXIMUM
UON = UNLESS OTHERWISE NOTED	

QUATTROCCHI KWOK ARCHITECTS
Main Office:
636 Fifth Street, Santa Rosa, CA 95404
Pleasanton Office:
600 Main Street, Suite E,
Pleasanton, CA 94566
(707) 576-0829

LICENSED ARCHITECT
JIM THEISS
LICENSE # C22643
EXP JUNE 30, 2019
STATE OF CALIFORNIA

SIGNED: DECEMBER 14, 2018

The Shalleck Collaborative Inc.
Planning and Design of Theatres | Production Systems | AV
1533 Martin Luther King Jr Way
Berkeley, CA 94709
tel 415-956-1000
www.shalleck.com

FREEDOM HIGH SCHOOL

PERFORMING ARTS AND CTE FACILITIES

1050 NEROLY RD
OAKLEY, CA 94561

LIBERTY UNION HIGH SCHOOL DISTRICT

ARCH PROJECT NO: 1739.00
DRAWN BY:
DRAWING SCALE:
PTN: 61721-0068

BID SET

AUGUST 13, 2019

SHEET TITLE

PRODUCTION LIGHTING MOUNTING DETAILS

SHEET NUMBER

PL-5.02

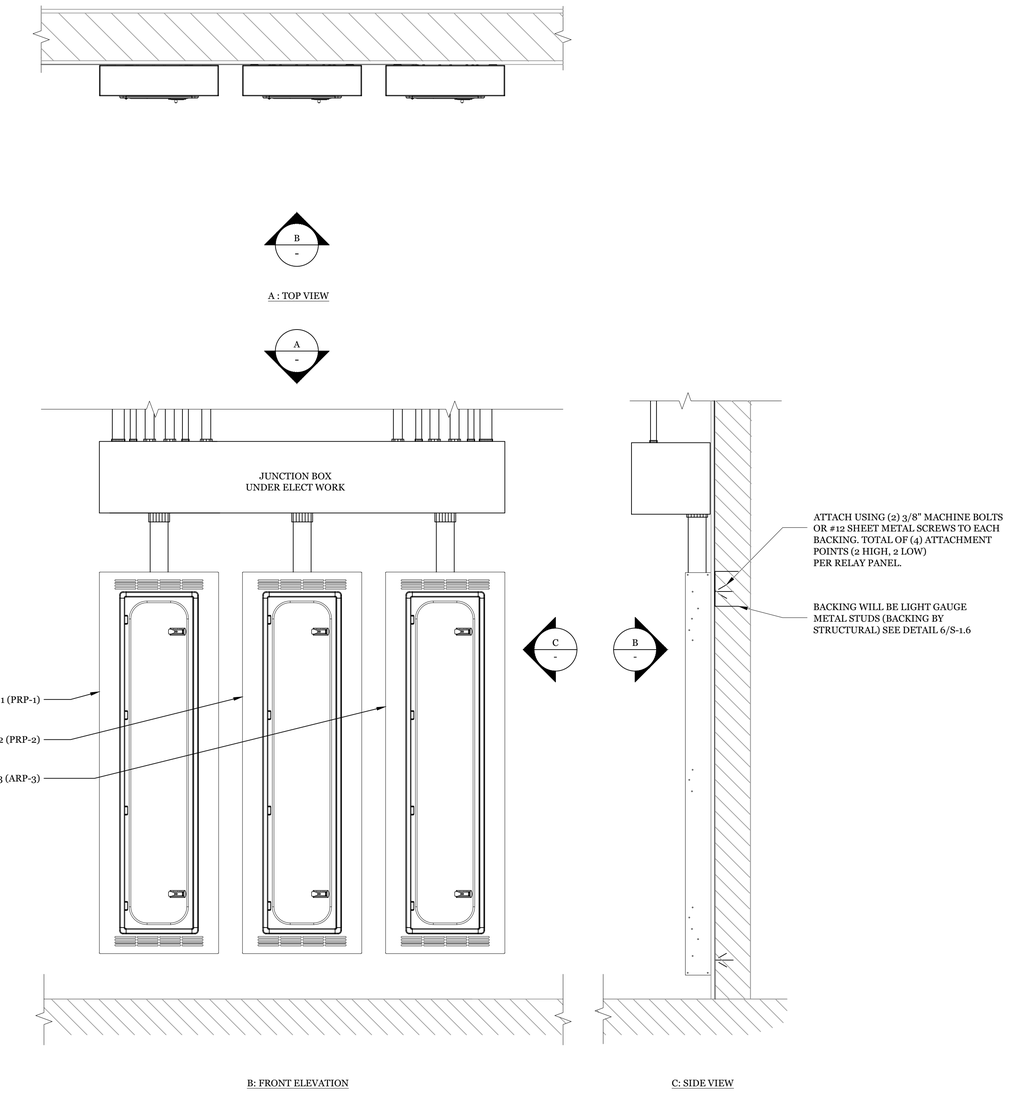

2 PRODUCTION & ARCHITECTURAL RELAY PANEL MOUNTING

1" = 1'-0"

PANEL WEIGHT: 120#/EA

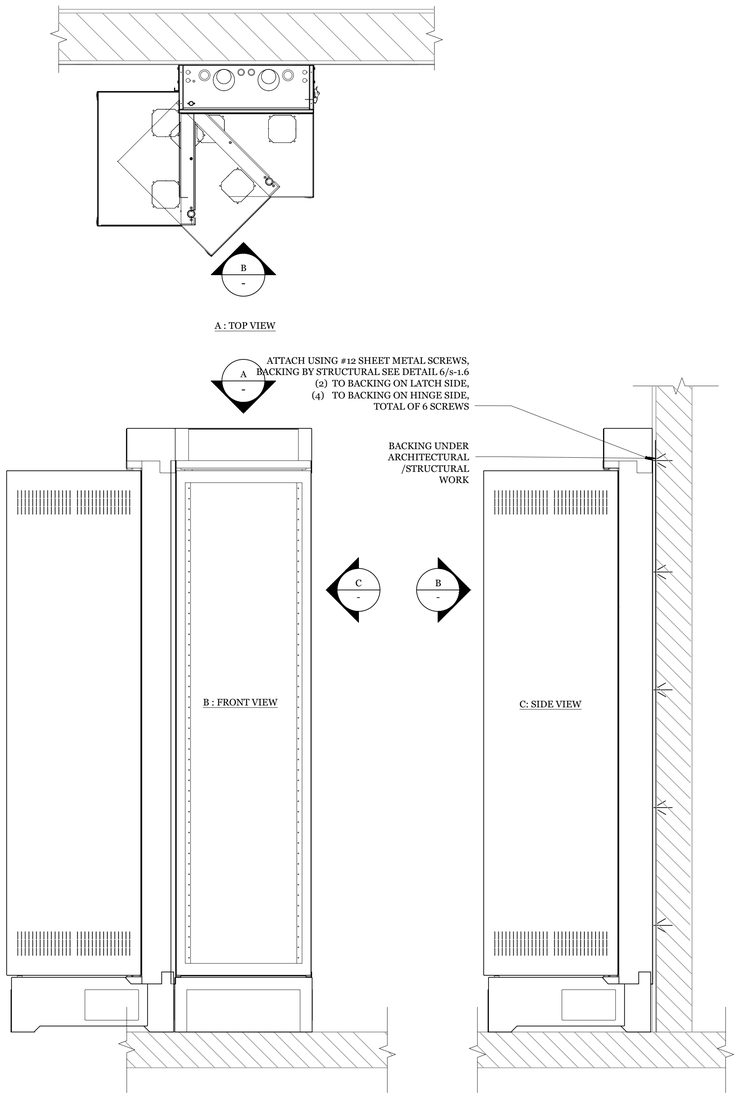

1 CONTROL EQUIPMENT RACK (CER) MOUNTING - ELEVATION

1" = 1'-0"

PANEL WEIGHT: 335# MAX

LIGHTING GENERAL NOTES

1. THIS SHEET IS INTENDED TO PROVIDE PRODUCTION LIGHTING SYSTEM INFORMATION ONLY. REFERENCE OTHER PRODUCTION SYSTEMS, ARCHITECTURAL AND ENGINEERING DOCUMENTS FOR RELATED AREAS.
2. REFERENCE SPECIFICATIONS AND ELECTRICAL DRAWINGS FOR DIVISION 26 INSTALLATION REQUIREMENTS
3. ALL CIRCUITS SHALL HAVE A DEDICATED HOMERUN UNLESS OTHERWISE INDICATED.
4. ALL CIRCUITS SHALL HAVE A DEDICATED NEUTRAL. ALL POWER DEVICE BOXES SHALL HAVE AT LEAST ONE DEDICATED GROUND HOMERUN TO THE DIMMER RACK.

ABBREVIATIONS

VIF = VERIFY IN FIELD	CLR = CLEAR
SAD = SEE ARCHITECTURAL DRAWINGS	HL = HOUSE LEFT
SSD = SEE STRUCTURAL DRAWINGS	HR = HOUSE RIGHT
SMD = SEE MECHANICAL DRAWINGS	SR = STAGE RIGHT
SED = SEE ELECTRICAL DRAWINGS	SL = STAGE LEFT
AFF = ABOVE FINISHED FLOOR	SIM. = SIMILAR
NIC = NOT IN CONTRACT	OPP. = OPPOSITE
HT = HEIGHT	NTS = NOT TO SCALE
TYP = TYPICAL	MIN = MINIMUM
RWL = RECOMMENDED WORKING LOAD	MAX = MAXIMUM
UON = UNLESS OTHERWISE NOTED	

QUATTROCCHI KWOK ARCHITECTS
Main Office:
636 Fifth Street, Santa Rosa, CA 95404
Pleasanton Office:
600 Main Street, Suite E,
Pleasanton, CA 94566
(707) 576-0829

LICENSED ARCHITECT
JIM THEISS
LICENSE # C22643
EXP JUNE 30, 2019
STATE OF CALIFORNIA

SIGNED: DECEMBER 14, 2018

The Shalleck Collaborative Inc.
Planning and Design of Theatres | Production Systems | AV
1533 Martin Luther King Jr Way
Berkeley, CA 94709
tel 415-956-1000
www.shalleck.com

FREEDOM HIGH SCHOOL

PERFORMING ARTS AND CTE FACILITIES

1050 NEROLY RD
OAKLEY, CA 94561

LIBERTY UNION HIGH SCHOOL DISTRICT

ARCH PROJECT NO: 1739.00
DRAWN BY:
DRAWING SCALE:
PTN: 61721-0068

BID SET

AUGUST 13, 2019

SHEET TITLE

PRODUCTION LIGHTING PANEL MOUNTINGS

SHEET NUMBER

PL-5.03





1RU — RACK IDENTIFICATION PANEL 1


NETWORK PATCH PANEL
ORCHESTRA PIT
UPSTAGE RIGHT
UPSTAGE LEFT
DOWNSTAGE RIGHT
DOWNSTAGE RIGHT
DOWNSTAGE RIGHT
DOWNSTAGE LEFT
DOWNSTAGE LEFT
DOWNSTAGE LEFT
DOWNSTAGE LEFT
TECH TABLE
TECH TABLE
TECH TABLE
AV MIX
AV MIX
AV MIX
CONTROL BOOTH
CONTROL BOOTH
CONTROL BOOTH
LOBBY
LOBBY
LOBBY

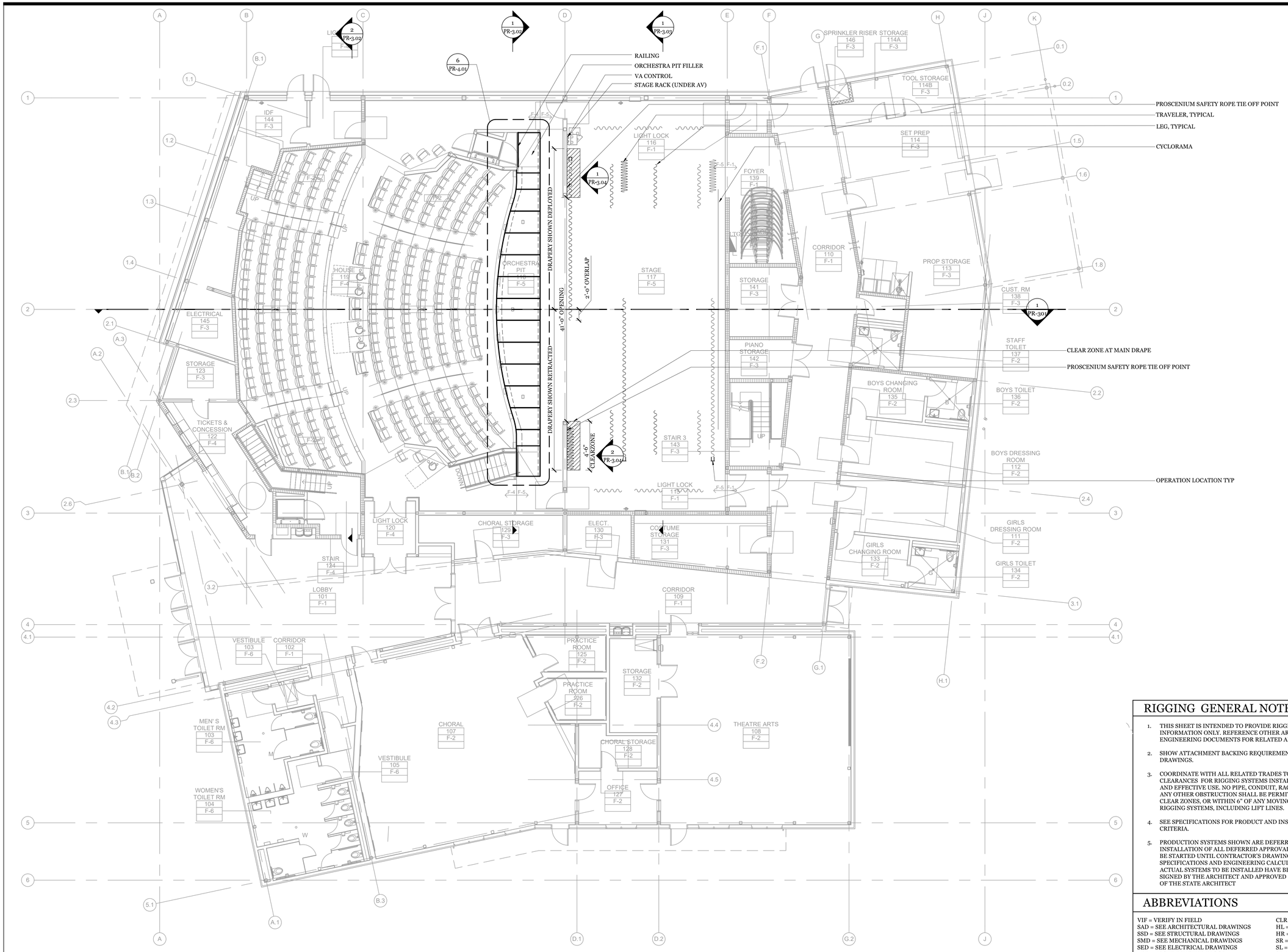

1 PRODUCTION RIGGING - LEVEL 1 PLAN
1/8" = 1'-0"

RIGGING GENERAL NOTES

1. THIS SHEET IS INTENDED TO PROVIDE RIGGING AND DRAPERY INFORMATION ONLY. REFERENCE OTHER ARCHITECTURAL AND ENGINEERING DOCUMENTS FOR RELATED AREAS.
2. SHOW ATTACHMENT BACKING REQUIREMENTS ON SHOP DRAWINGS.
3. COORDINATE WITH ALL RELATED TRADES TO MAINTAIN CLEARANCES FOR RIGGING SYSTEMS INSTALLATION AND SAFE AND EFFECTIVE USE. NO PIPE, CONDUIT, RACEWAY, DUCT, NOR ANY OTHER OBSTRUCTION SHALL BE PERMITTED IN RIGGING CLEAR ZONES, OR WITHIN 6" OF ANY MOVING COMPONENT OF RIGGING SYSTEMS, INCLUDING LIFT LINES.
4. SEE SPECIFICATIONS FOR PRODUCT AND INSTALLATION CRITERIA.
5. PRODUCTION SYSTEMS SHOWN ARE DEFERRED APPROVAL. INSTALLATION OF ALL DEFERRED APPROVAL ITEMS SHALL NOT BE STARTED UNTIL CONTRACTOR'S DRAWINGS, SPECIFICATIONS AND ENGINEERING CALCULATIONS FOR THE ACTUAL SYSTEMS TO BE INSTALLED HAVE BEEN ACCEPTED AND SIGNED BY THE ARCHITECT AND APPROVED BY THE DIVISION OF THE STATE ARCHITECT

ABBREVIATIONS

VIF = VERIFY IN FIELD	CLR = CLEAR
SAD = SEE ARCHITECTURAL DRAWINGS	HL = HOUSE LEFT
SSD = SEE STRUCTURAL DRAWINGS	HR = HOUSE RIGHT
SMD = SEE MECHANICAL DRAWINGS	SR = STAGE RIGHT
SED = SEE ELECTRICAL DRAWINGS	SL = STAGE LEFT
AFF = ABOVE FINISHED FLOOR	SIM. = SIMILAR
NIC = NOT IN CONTRACT	OPP. = OPPOSITE
HT = HEIGHT	NTS = NOT TO SCALE
TYP = TYPICAL	MIN = MINIMUM
RWL = RECOMMENDED WORKING LOAD	MAX = MAXIMUM

QUATTROCCHI KWOK ARCHITECTS
Main Office:
636 Fifth Street, Santa Rosa, CA 95404
Pleasanton Office:
600 Main Street, Suite E,
Pleasanton, CA 94566
(707) 576-0829

LICENSED ARCHITECT
JIM THEISS
LICENSE # C22643
EXP JUNE 30, 2019
STATE OF CALIFORNIA

SIGNED: DECEMBER 14, 2018

The Shalleck Collaborative Inc.
Planning and Design of Theatres | Production Systems | AV
1633 Martin Luther King Jr Way
Berkeley, CA 94709
tel 415-956-1000
www.shalleck.com

FREEDOM HIGH SCHOOL

PERFORMING ARTS AND CTE FACILITIES

1050 NEROLY RD
OAKLEY, CA 94561

LIBERTY UNION HIGH SCHOOL DISTRICT

ARCH PROJECT NO: 1739.00
DRAWN BY:
DRAWING SCALE:
PTN: 61721-0068

BID SET

AUGUST 13, 2019

SHEET TITLE

PRODUCTION RIGGING LEVEL 1 PLAN

SHEET NUMBER

PR-1.01

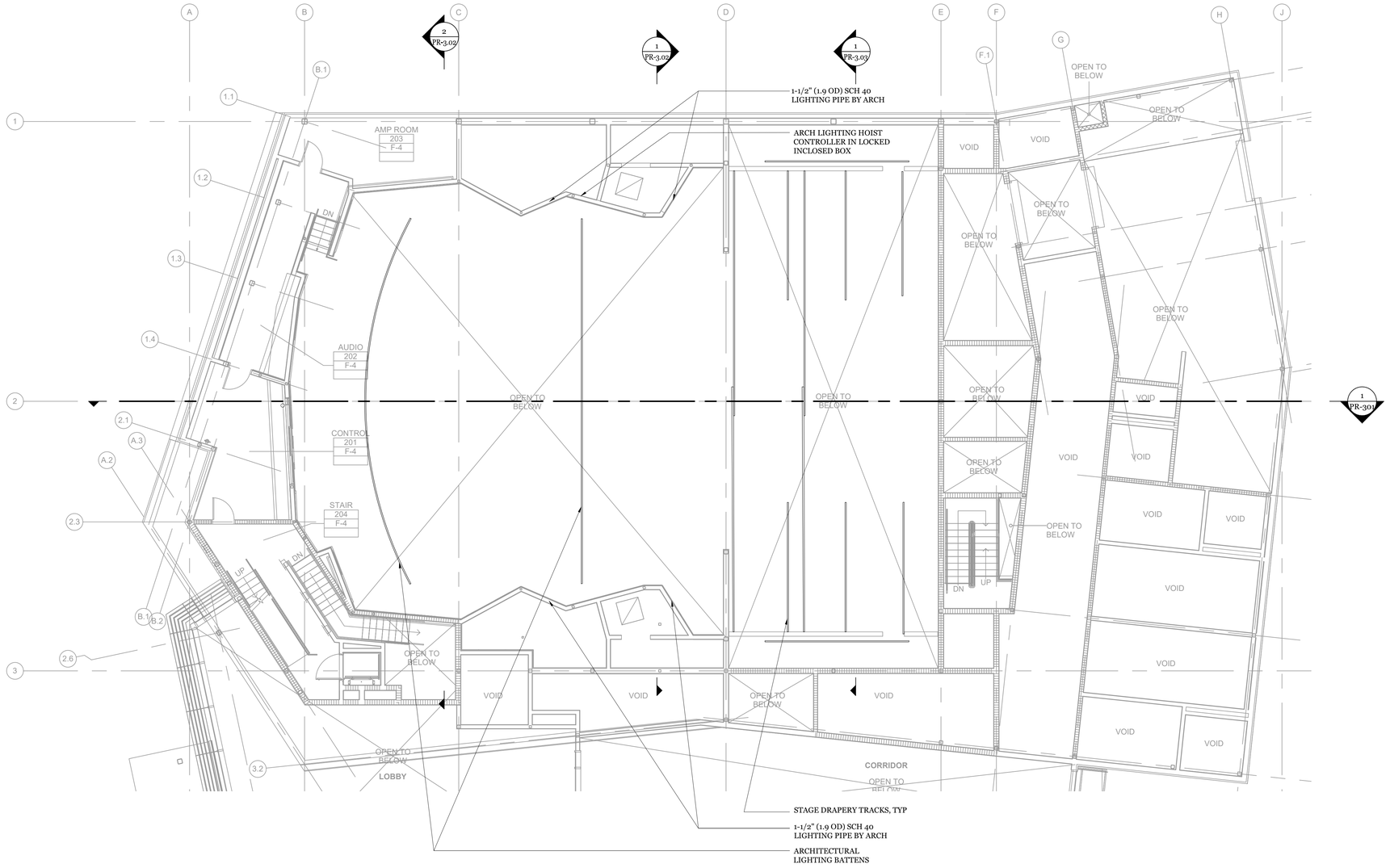

1 PRODUCTION RIGGING - LEVEL 2 PLAN
1/8" = 1'-0"

RIGGING GENERAL NOTES

1. THIS SHEET IS INTENDED TO PROVIDE RIGGING AND DRAPERY INFORMATION ONLY. REFERENCE OTHER ARCHITECTURAL AND ENGINEERING DOCUMENTS FOR RELATED AREAS.
2. SHOW ATTACHMENT BACKING REQUIREMENTS ON SHOP DRAWINGS.
3. COORDINATE WITH ALL RELATED TRADES TO MAINTAIN CLEARANCES FOR RIGGING SYSTEMS INSTALLATION AND SAFE AND EFFECTIVE USE. NO PIPE, CONDUIT, RACEWAY, DUCT, NOR ANY OTHER OBSTRUCTION SHALL BE PERMITTED IN RIGGING CLEAR ZONES, OR WITHIN 6" OF ANY MOVING COMPONENT OF RIGGING SYSTEMS, INCLUDING LIFT LINES.
4. SEE SPECIFICATIONS FOR PRODUCT AND INSTALLATION CRITERIA.
5. PRODUCTION SYSTEMS SHOWN ARE DEFERRED APPROVAL. INSTALLATION OF ALL DEFERRED APPROVAL ITEMS SHALL NOT BE STARTED UNTIL CONTRACTOR'S DRAWINGS, SPECIFICATIONS AND ENGINEERING CALCULATIONS FOR THE ACTUAL SYSTEMS TO BE INSTALLED HAVE BEEN ACCEPTED AND SIGNED BY THE ARCHITECT AND APPROVED BY THE DIVISION OF THE STATE ARCHITECT

ABBREVIATIONS

VIF = VERIFY IN FIELD	CLR = CLEAR
SAD = SEE ARCHITECTURAL DRAWINGS	HL = HOUSE LEFT
SSD = SEE STRUCTURAL DRAWINGS	HR = HOUSE RIGHT
SMD = SEE MECHANICAL DRAWINGS	SR = STAGE RIGHT
SED = SEE ELECTRICAL DRAWINGS	SL = STAGE LEFT
AFF = ABOVE FINISHED FLOOR	SIM. = SIMILAR
NIC = NOT IN CONTRACT	OPP. = OPPOSITE
HT = HEIGHT	NTS = NOT TO SCALE
TYP = TYPICAL	MIN = MINIMUM
RWL = RECOMMENDED WORKING LOAD	MAX = MAXIMUM

QUATTROCCHI KWOK ARCHITECTS
Main Office:
636 Fifth Street, Santa Rosa, CA 95404
Pleasanton Office:
600 Main Street, Suite E,
Pleasanton, CA 94566
(707) 576-0829

LICENSED ARCHITECT
JIM THEISS
LICENSE # C22643
EXP JUNE 30, 2019
STATE OF CALIFORNIA

SIGNED: DECEMBER 14, 2018

The Shalleck Collaborative Inc.
Planning and Design of Theatres | Production Systems | AV
1633 Martin Luther King Jr Way
Berkeley, CA 94709
tel 415-956-1000
www.shalleck.com

FREEDOM HIGH SCHOOL

PERFORMING ARTS AND CTE FACILITIES

1050 NEROLY RD
OAKLEY, CA 94561

LIBERTY UNION HIGH SCHOOL DISTRICT

ARCH PROJECT NO: 1739.00
DRAWN BY:
DRAWING SCALE:
PTN: 61721-0068

BID SET

AUGUST 13, 2019

SHEET TITLE

PRODUCTION RIGGING LEVEL 2 PLAN

SHEET NUMBER

PR-1.02

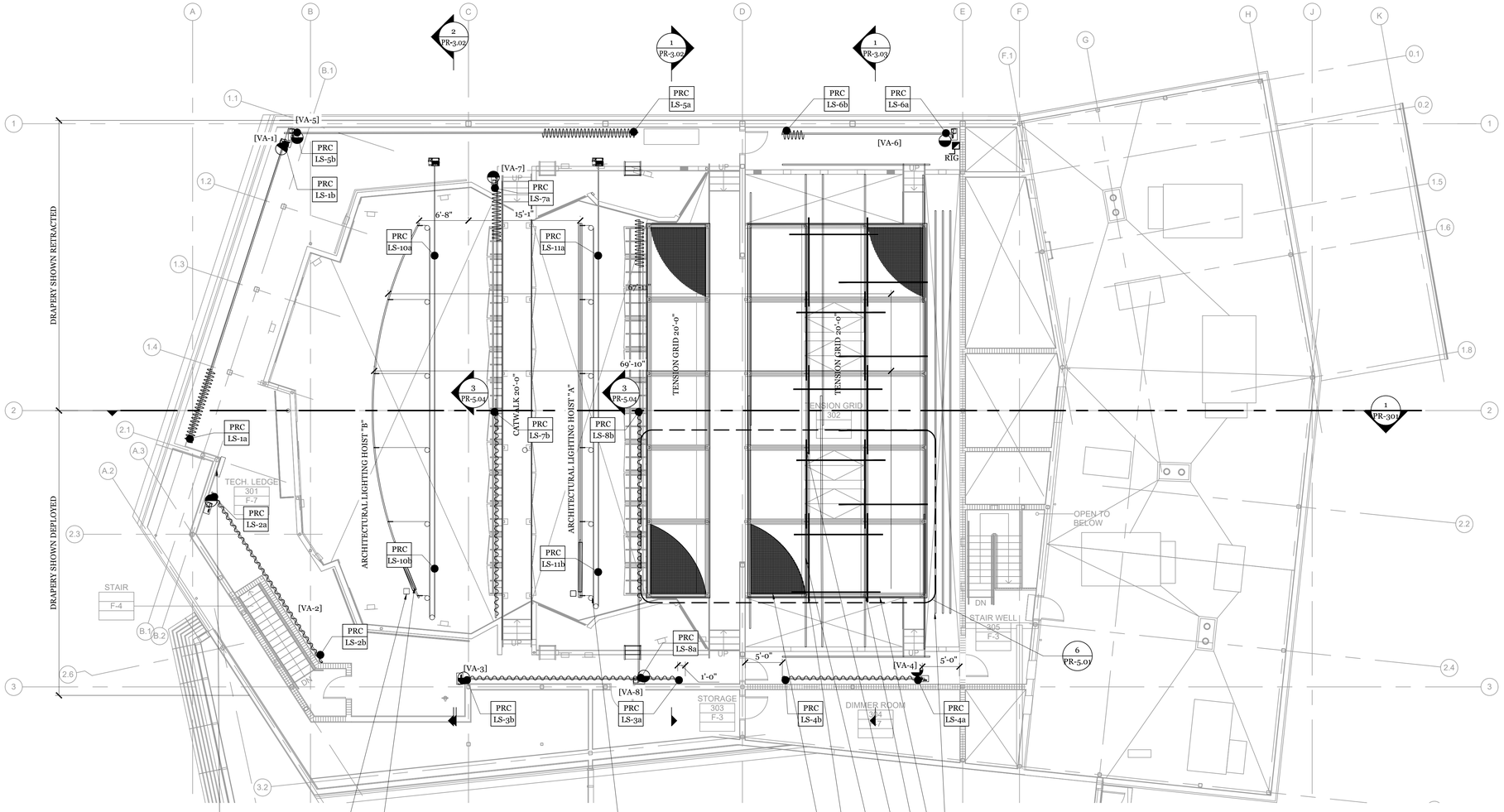

HOIST BATTEN

PANTOGRAPH FOR CABLE MANAGEMENT OF ARCH LIGHTING BATTEN

TERMINAL BOX AT ROOF DECK FOR DIMMED ARCH LIGHTING (UNDER ELEC WORK) 208V/3-PHASE DISCONNECT FOR 1.5 HP MOTOR, TYPICAL

VARIABLE ACOUSTIC DRAPERY CONTROLLER

TENSION GRID WIRES CUT AWAY FOR CLARITY

TENSION GRID MODULE (UNDER RIGGING WORK)

LEG TRACK MOUNTED TO UNDERSIDE OF TENSION GRID (UNDER RIGGING)

1-1/2" SCHEDULE 40 PIPE (1.9"OD) HANGERS WITHIN TENSION GRID (UNDER STRUCTURAL)

HSS HANGERS AT PERIMETER OF TENSION GRID (UNDER STRUCTURAL)

PERIMETER FRAME (UNDER STRUCTURAL)

DEAD HUNG BATTENS

1 PRODUCTION RIGGING - LEVEL 3 PLAN
1/8" = 1'-0"

RIGGING SYMBOL KEY

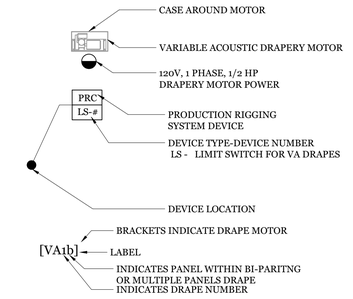

RIGGING GENERAL NOTES

1. THIS SHEET IS INTENDED TO PROVIDE RIGGING AND DRAPERY INFORMATION ONLY. REFERENCE OTHER ARCHITECTURAL AND ENGINEERING DOCUMENTS FOR RELATED AREAS.
2. SHOW ATTACHMENT BACKING REQUIREMENTS ON SHOP DRAWINGS.
3. COORDINATE WITH ALL RELATED TRADES TO MAINTAIN CLEARANCES FOR RIGGING SYSTEMS INSTALLATION AND SAFE AND EFFECTIVE USE. NO PIPE, CONDUIT, RACEWAY, DUCT, NOR ANY OTHER OBSTRUCTION SHALL BE PERMITTED IN RIGGING CLEAR ZONES, OR WITHIN 6" OF ANY MOVING COMPONENT OF RIGGING SYSTEMS, INCLUDING LIFT LINES.
4. SEE SPECIFICATIONS FOR PRODUCT AND INSTALLATION CRITERIA.
5. PRODUCTION SYSTEMS SHOWN ARE DEFERRED APPROVAL. INSTALLATION OF ALL DEFERRED APPROVAL ITEMS SHALL NOT BE STARTED UNTIL CONTRACTOR'S DRAWINGS, SPECIFICATIONS AND ENGINEERING CALCULATIONS FOR THE ACTUAL SYSTEMS TO BE INSTALLED HAVE BEEN ACCEPTED AND SIGNED BY THE ARCHITECT AND APPROVED BY THE DIVISION OF THE STATE ARCHITECT

ABBREVIATIONS

VIF = VERIFY IN FIELD	CLR = CLEAR
SAD = SEE ARCHITECTURAL DRAWINGS	HL = HOUSE LEFT
SSD = SEE STRUCTURAL DRAWINGS	HR = HOUSE RIGHT
SMD = SEE MECHANICAL DRAWINGS	SR = STAGE RIGHT
SED = SEE ELECTRICAL DRAWINGS	SL = STAGE LEFT
AFF = ABOVE FINISHED FLOOR	SIM. = SIMILAR
NIC = NOT IN CONTRACT	OPP. = OPPOSITE
HT = HEIGHT	NTS = NOT TO SCALE
TYP = TYPICAL	MIN = MINIMUM
RWL = RECOMMENDED WORKING LOAD	MAX = MAXIMUM

QUATTROCCHI KWOK ARCHITECTS
Main Office:
636 Fifth Street, Santa Rosa, CA 95404
Pleasanton Office:
600 Main Street, Suite E,
Pleasanton, CA 94566
(707) 576-0829

LICENSED ARCHITECT
JIM THEISS
LICENSE # C22643
EXP JUNE 30, 2019
STATE OF CALIFORNIA

SIGNED: DECEMBER 14, 2018

The Shalleck Collaborative Inc.
Planning and Design of Theatres | Production Systems | AV
1633 Martin Luther King Jr Way
Berkeley, CA 94709
tel 415-956-1000
www.shalleck.com

FREEDOM HIGH SCHOOL

PERFORMING ARTS AND CTE FACILITIES

1050 NEROLY RD
OAKLEY, CA 94561

LIBERTY UNION HIGH SCHOOL DISTRICT

ARCH PROJECT NO: 1739.00
DRAWN BY:
DRAWING SCALE:
PTN: 61721-0068

BID SET

AUGUST 13, 2019

SHEET TITLE

PRODUCTION RIGGING LEVEL 3 PLAN

SHEET NUMBER

PR-1.03

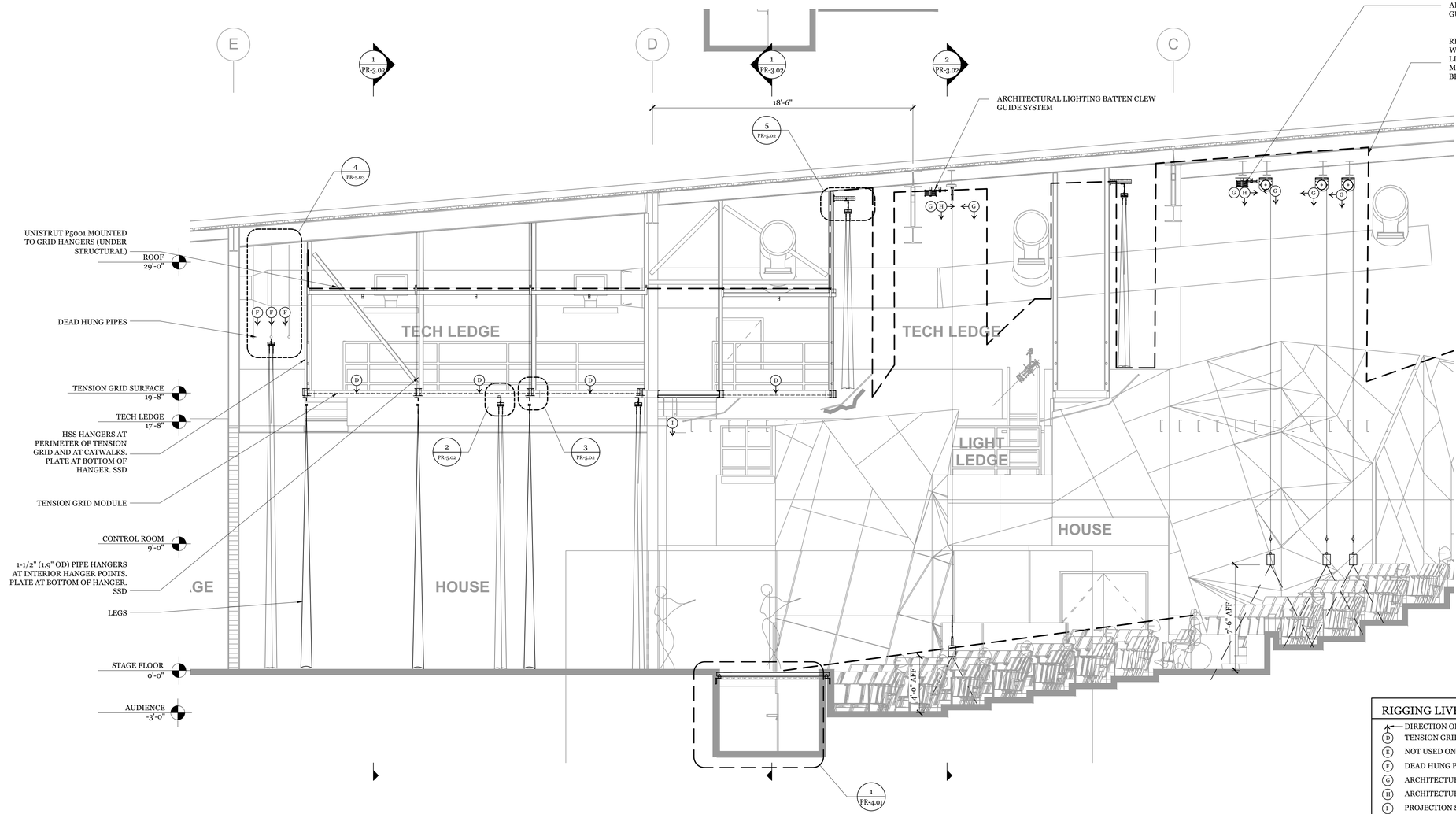

1 CENTERLINE LOADING SECTION
1/4" = 1'-0"

RIGGING LIVE LOAD KEY

- DIRECTION OF LOAD
- (D) TENSION GRID: 25# / SF
- (E) NOT USED ON SHEET
- (F) DEAD HUNG PIPE: 25#/LF
- (G) ARCHITECTURAL LIGHTING BATTEN LOFTBLOCK: 250#/LF MAX
- (H) ARCHITECTURAL LIGHTING BATTEN MULEBLOCK: 1000# MAX
- (I) PROJECTION SCREEN: 1000# LOAD

RIGGING GENERAL NOTES

1. THIS SHEET IS INTENDED TO PROVIDE RIGGING AND DRAPERY INFORMATION ONLY. REFERENCE OTHER ARCHITECTURAL AND ENGINEERING DOCUMENTS FOR RELATED AREAS.
2. SHOW ATTACHMENT BACKING REQUIREMENTS ON SHOP DRAWINGS.
3. COORDINATE WITH ALL RELATED TRADES TO MAINTAIN CLEARANCES FOR RIGGING SYSTEMS INSTALLATION AND SAFE AND EFFECTIVE USE. NO PIPE, CONDUIT, RACEWAY, DUCT, NOR ANY OTHER OBSTRUCTION SHALL BE PERMITTED IN RIGGING CLEAR ZONES, OR WITHIN 6" OF ANY MOVING COMPONENT OF RIGGING SYSTEMS, INCLUDING LIFT LINES.
4. SEE SPECIFICATIONS FOR PRODUCT AND INSTALLATION CRITERIA.
5. PRODUCTION SYSTEMS SHOWN ARE DEFERRED APPROVAL. INSTALLATION OF ALL DEFERRED APPROVAL ITEMS SHALL NOT BE STARTED UNTIL CONTRACTOR'S DRAWINGS, SPECIFICATIONS AND ENGINEERING CALCULATIONS FOR THE ACTUAL SYSTEMS TO BE INSTALLED HAVE BEEN ACCEPTED AND SIGNED BY THE ARCHITECT AND APPROVED BY THE DIVISION OF THE STATE ARCHITECT

ABBREVIATIONS

VIF = VERIFY IN FIELD	CLR = CLEAR
SAD = SEE ARCHITECTURAL DRAWINGS	HL = HOUSE LEFT
SSD = SEE STRUCTURAL DRAWINGS	HR = HOUSE RIGHT
SMD = SEE MECHANICAL DRAWINGS	SR = STAGE RIGHT
SED = SEE ELECTRICAL DRAWINGS	SL = STAGE LEFT
AFF = ABOVE FINISHED FLOOR	SIM. = SIMILAR
NIC = NOT IN CONTRACT	OPP. = OPPOSITE
HT = HEIGHT	NTS = NOT TO SCALE
TYP = TYPICAL	MIN = MINIMUM
RWL = RECOMMENDED WORKING LOAD	MAX = MAXIMUM

QUATTROCCHI KWOK ARCHITECTS
Main Office:
636 Fifth Street, Santa Rosa, CA 95404
Pleasanton Office:
600 Main Street, Suite E,
Pleasanton, CA 94566
(707) 576-0829

LICENSED ARCHITECT
JIM THEISS
LICENSE # C22643
EXP JUNE 30, 2019
STATE OF CALIFORNIA

SIGNED: DECEMBER 14, 2018

The Shalleck Collaborative Inc.
Planning and Design of Theatres | Production Systems | AV
1633 Martin Luther King Jr Way
Berkeley, CA 94709
tel 415-956-1000
www.shalleck.com

FREEDOM HIGH SCHOOL

PERFORMING ARTS AND CTE FACILITIES

1050 NEROLY RD
OAKLEY, CA 94561

LIBERTY UNION HIGH SCHOOL DISTRICT

ARCH PROJECT NO: 1739.00
DRAWN BY:
DRAWING SCALE:
PTN: 61721-0068

BID SET

AUGUST 13, 2019

SHEET TITLE

PRODUCTION RIGGING CENTERLINE SECTION

SHEET NUMBER

PR-3.01

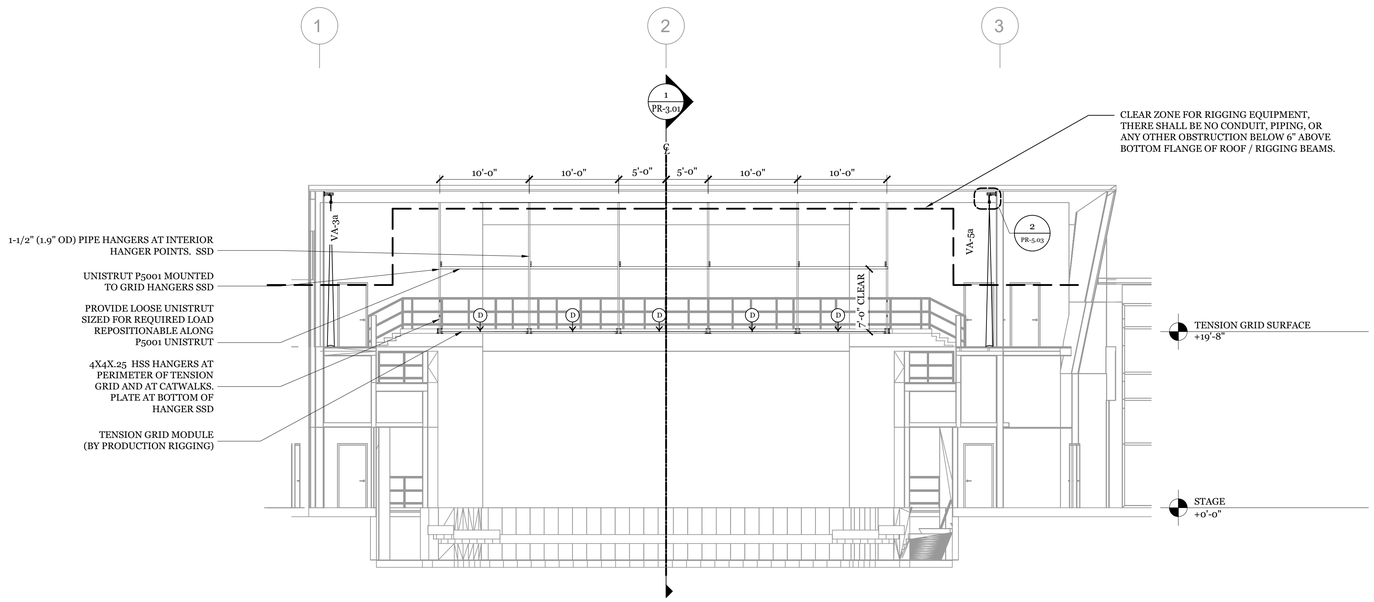

1 TRANSVERSE LOADING SECTION AT FRONT OF HOUSE TENSION GRID
1/8" = 1'-0"

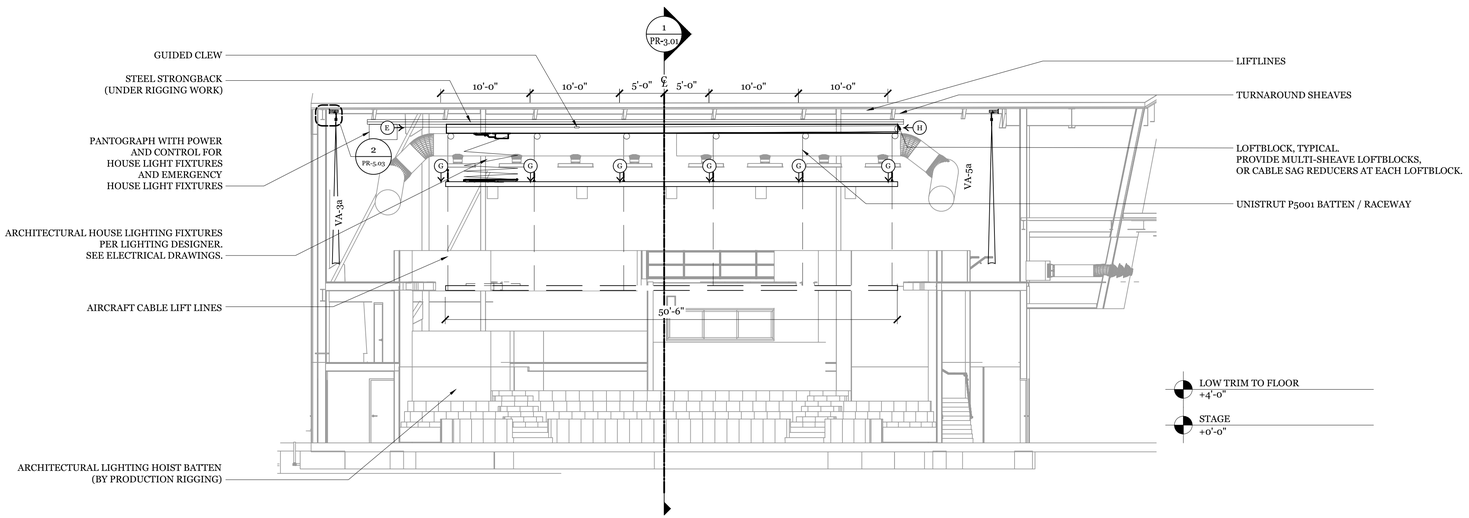

2 TRANSVERSE LOADING SECTION AT FRONT OF HOUSE ARCHITECTURAL LIGHTING BATTEN
1/8" = 1'-0"

RIGGING LIVE LOAD KEY

- DIRECTION OF LOAD
- (D) TENSION GRID: 25# / SF
- (E) ARCHITECTURAL LIGHTING BATTEN HEADBLOCK AND HOIST: 250#/LF MAX
- (F) DEAD HUNG PIPE: 25#/LF
- (G) ARCHITECTURAL LIGHTING BATTEN LOFTBLOCK: 250#/LF MAX
- (H) ARCHITECTURAL LIGHTING BATTEN MULEBLOCK: 1000# MAX
- (I) PROJECTION SCREEN: 1000# LOAD

RIGGING GENERAL NOTES

1. THIS SHEET IS INTENDED TO PROVIDE RIGGING AND DRAPERY INFORMATION ONLY. REFERENCE OTHER ARCHITECTURAL AND ENGINEERING DOCUMENTS FOR RELATED AREAS.
2. SHOW ATTACHMENT BACKING REQUIREMENTS ON SHOP DRAWINGS.
3. COORDINATE WITH ALL RELATED TRADES TO MAINTAIN CLEARANCES FOR RIGGING SYSTEMS INSTALLATION AND SAFE AND EFFECTIVE USE. NO PIPE, CONDUIT, RACEWAY, DUCT, NOR ANY OTHER OBSTRUCTION SHALL BE PERMITTED IN RIGGING CLEAR ZONES, OR WITHIN 6" OF ANY MOVING COMPONENT OF RIGGING SYSTEMS, INCLUDING LIFT LINES.
4. SEE SPECIFICATIONS FOR PRODUCT AND INSTALLATION CRITERIA.
5. PRODUCTION SYSTEMS SHOWN ARE DEFERRED APPROVAL. INSTALLATION OF ALL DEFERRED APPROVAL ITEMS SHALL NOT BE STARTED UNTIL CONTRACTOR'S DRAWINGS, SPECIFICATIONS AND ENGINEERING CALCULATIONS FOR THE ACTUAL SYSTEMS TO BE INSTALLED HAVE BEEN ACCEPTED AND SIGNED BY THE ARCHITECT AND APPROVED BY THE DIVISION OF THE STATE ARCHITECT

ABBREVIATIONS

VIF = VERIFY IN FIELD	CLR = CLEAR
SAD = SEE ARCHITECTURAL DRAWINGS	HL = HOUSE LEFT
SSD = SEE STRUCTURAL DRAWINGS	HR = HOUSE RIGHT
SMD = SEE MECHANICAL DRAWINGS	SR = STAGE RIGHT
SED = SEE ELECTRICAL DRAWINGS	SL = STAGE LEFT
AFF = ABOVE FINISHED FLOOR	SIM. = SIMILAR
NIC = NOT IN CONTRACT	OPP. = OPPOSITE
HT = HEIGHT	NTS = NOT TO SCALE
TYP = TYPICAL	MIN = MINIMUM
RWL = RECOMMENDED WORKING LOAD	MAX = MAXIMUM

QUATTROCCHI KWOK ARCHITECTS
Main Office:
636 Fifth Street, Santa Rosa, CA 95404
Pleasanton Office:
600 Main Street, Suite E,
Pleasanton, CA 94566
(707) 576-0829

LICENSED ARCHITECT
JIM THEISS
LICENSE # C22643
EXP JUNE 30, 2019
STATE OF CALIFORNIA

SIGNED: DECEMBER 14, 2018

The Shalleck Collaborative Inc.
Planning and Design of Theatres | Production Systems | AV
1533 Martin Luther King Jr Way
Berkeley, CA 94709
tel 415-956-1000
www.shalleck.com

FREEDOM HIGH SCHOOL

PERFORMING ARTS AND CTE FACILITIES

1050 NEROLY RD
OAKLEY, CA 94561

LIBERTY UNION HIGH SCHOOL DISTRICT

ARCH PROJECT NO:	1739.00
DRAWN BY:	
DRAWING SCALE:	
PTN:	61721-0068

BID SET

AUGUST 13, 2019

SHEET TITLE

PRODUCTION RIGGING FOH SECTIONS

SHEET NUMBER

PR-3.02

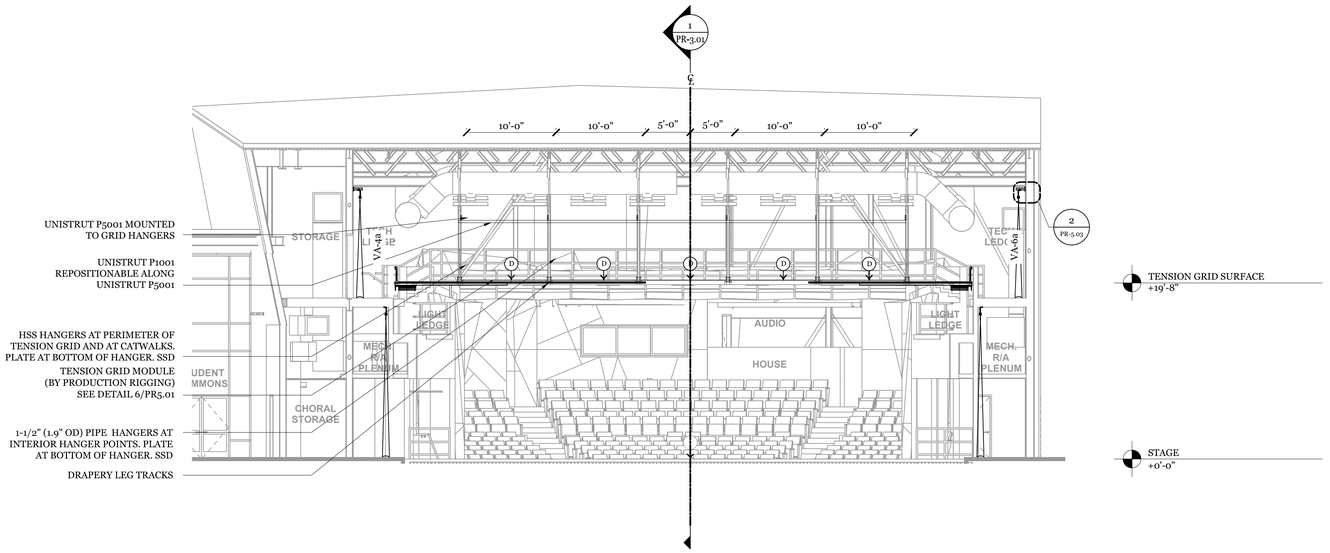

1 TRANSVERSE LOADING SECTION AT STAGE TENSION GRID
1/8" = 1'-0"

RIGGING LIVE LOAD KEY

- DIRECTION OF LOAD
- (D) TENSION GRID: 25# / SF
- (E) ARCHITECTURAL LIGHTING BATTEN HEADBLOCK AND HOIST: 250#/LF MAX
- (F) DEAD HUNG PIPE: 25#/LF
- (G) ARCHITECTURAL LIGHTING BATTEN LOFTBLOCK: 250#/LF MAX
- (H) ARCHITECTURAL LIGHTING BATTEN MULEBLOCK: 1000# MAX
- (I) PROJECTION SCREEN: 1000# LOAD

RIGGING GENERAL NOTES

1. THIS SHEET IS INTENDED TO PROVIDE RIGGING AND DRAPERY INFORMATION ONLY. REFERENCE OTHER ARCHITECTURAL AND ENGINEERING DOCUMENTS FOR RELATED AREAS.
2. SHOW ATTACHMENT BACKING REQUIREMENTS ON SHOP DRAWINGS.
3. COORDINATE WITH ALL RELATED TRADES TO MAINTAIN CLEARANCES FOR RIGGING SYSTEMS INSTALLATION AND SAFE AND EFFECTIVE USE. NO PIPE, CONDUIT, RACEWAY, DUCT, NOR ANY OTHER OBSTRUCTION SHALL BE PERMITTED IN RIGGING CLEAR ZONES, OR WITHIN 6" OF ANY MOVING COMPONENT OF RIGGING SYSTEMS, INCLUDING LIFT LINES.
4. SEE SPECIFICATIONS FOR PRODUCT AND INSTALLATION CRITERIA.
5. PRODUCTION SYSTEMS SHOWN ARE DEFERRED APPROVAL. INSTALLATION OF ALL DEFERRED APPROVAL ITEMS SHALL NOT BE STARTED UNTIL CONTRACTOR'S DRAWINGS, SPECIFICATIONS AND ENGINEERING CALCULATIONS FOR THE ACTUAL SYSTEMS TO BE INSTALLED HAVE BEEN ACCEPTED AND SIGNED BY THE ARCHITECT AND APPROVED BY THE DIVISION OF THE STATE ARCHITECT

ABBREVIATIONS

VIF = VERIFY IN FIELD	CLR = CLEAR
SAD = SEE ARCHITECTURAL DRAWINGS	HL = HOUSE LEFT
SSD = SEE STRUCTURAL DRAWINGS	HR = HOUSE RIGHT
SMD = SEE MECHANICAL DRAWINGS	SR = STAGE RIGHT
SED = SEE ELECTRICAL DRAWINGS	SL = STAGE LEFT
AFF = ABOVE FINISHED FLOOR	SIM. = SIMILAR
NIC = NOT IN CONTRACT	OPP. = OPPOSITE
HT = HEIGHT	NTS = NOT TO SCALE
TYP = TYPICAL	MIN = MINIMUM
RWL = RECOMMENDED WORKING LOAD	MAX = MAXIMUM

QUATTROCCHI KWOK ARCHITECTS
Main Office:
636 Fifth Street, Santa Rosa, CA 95404
Pleasanton Office:
600 Main Street, Suite E,
Pleasanton, CA 94566
(707) 576-0829

LICENSED ARCHITECT
JIM THEISS
LICENSE # C22643
EXP JUNE 30, 2019
STATE OF CALIFORNIA

SIGNED: DECEMBER 14, 2018

The Shalleck Collaborative Inc.
Planning and Design of Theatres | Production Systems | AV
1633 Martin Luther King Jr Way
Berkeley, CA 94709
tel 415-956-1000
www.shalleck.com

FREEDOM HIGH SCHOOL

PERFORMING ARTS AND CTE FACILITIES

1050 NEROLY RD
OAKLEY, CA 94561

LIBERTY UNION HIGH SCHOOL DISTRICT

ARCH PROJECT NO: 1739.00
DRAWN BY:
DRAWING SCALE:
PTN: 61721-0068

BID SET

AUGUST 13, 2019

SHEET TITLE

PRODUCTION RIGGING STAGE SECTION

SHEET NUMBER

PR-3.03

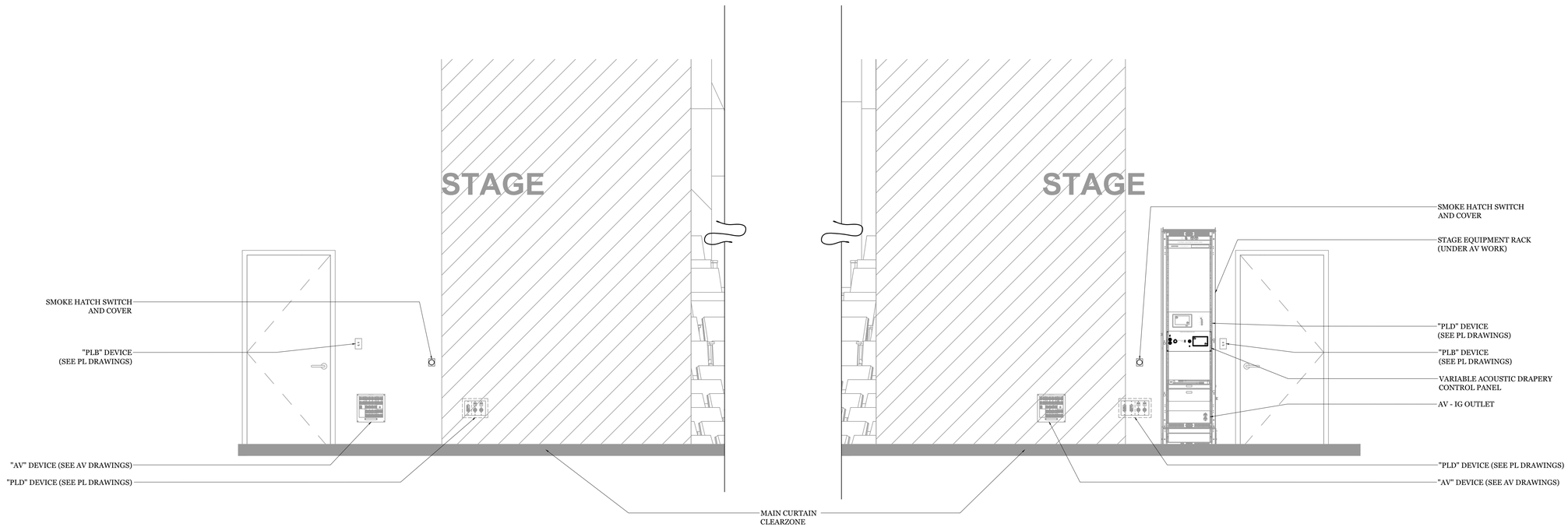

2 ELEVATION OF STAGE LEFT PROSCENIUM WALL
1/2" = 1'-0"

1 ELEVATION OF STAGE RIGHT PROSCENIUM WALL
1/2" = 1'-0"

RIGGING GENERAL NOTES

1. THIS SHEET IS INTENDED TO PROVIDE RIGGING AND DRAPERY INFORMATION ONLY. REFERENCE OTHER ARCHITECTURAL AND ENGINEERING DOCUMENTS FOR RELATED AREAS.
2. SHOW ATTACHMENT BACKING REQUIREMENTS ON SHOP DRAWINGS.
3. COORDINATE WITH ALL RELATED TRADES TO MAINTAIN CLEARANCES FOR RIGGING SYSTEMS INSTALLATION AND SAFE AND EFFECTIVE USE. NO PIPE, CONDUIT, RACEWAY, DUCT, NOR ANY OTHER OBSTRUCTION SHALL BE PERMITTED IN RIGGING CLEAR ZONES, OR WITHIN 6" OF ANY MOVING COMPONENT OF RIGGING SYSTEMS, INCLUDING LIFT LINES.
4. SEE SPECIFICATIONS FOR PRODUCT AND INSTALLATION CRITERIA.
5. PRODUCTION SYSTEMS SHOWN ARE DEFERRED APPROVAL. INSTALLATION OF ALL DEFERRED APPROVAL ITEMS SHALL NOT BE STARTED UNTIL CONTRACTOR'S DRAWINGS, SPECIFICATIONS AND ENGINEERING CALCULATIONS FOR THE ACTUAL SYSTEMS TO BE INSTALLED HAVE BEEN ACCEPTED AND SIGNED BY THE ARCHITECT AND APPROVED BY THE DIVISION OF THE STATE ARCHITECT

ABBREVIATIONS

VIF = VERIFY IN FIELD	CLR = CLEAR
SAD = SEE ARCHITECTURAL DRAWINGS	HL = HOUSE LEFT
SSD = SEE STRUCTURAL DRAWINGS	HR = HOUSE RIGHT
SMD = SEE MECHANICAL DRAWINGS	SR = STAGE RIGHT
SED = SEE ELECTRICAL DRAWINGS	SL = STAGE LEFT
AFF = ABOVE FINISHED FLOOR	SIM. = SIMILAR
NIC = NOT IN CONTRACT	OPP. = OPPOSITE
HT = HEIGHT	NTS = NOT TO SCALE
TYP = TYPICAL	MIN = MINIMUM
RWL = RECOMMENDED WORKING LOAD	MAX = MAXIMUM

QUATTROCCHI KWOK ARCHITECTS
Main Office:
636 Fifth Street, Santa Rosa, CA 95404
Pleasanton Office:
600 Main Street, Suite E,
Pleasanton, CA 94566
(707) 576-0829

LICENSED ARCHITECT
JIM THEISS
LICENSE # C22643
EXP JUNE 30, 2019
STATE OF CALIFORNIA

SIGNED: DECEMBER 14, 2018

The Shalleck Collaborative Inc.
Planning and Design of Theatres | Production Systems | AV
1633 Martin Luther King Jr Way
Berkeley, CA 94709
tel 415-956-1000
www.shalleck.com

FREEDOM HIGH SCHOOL

PERFORMING ARTS AND CTE FACILITIES

1050 NEROLY RD
OAKLEY, CA 94561

LIBERTY UNION HIGH SCHOOL DISTRICT

ARCH PROJECT NO:	1739.00
DRAWN BY:	
DRAWING SCALE:	
PTN:	61721-0068

BID SET

AUGUST 13, 2019

SHEET TITLE

PRODUCTION RIGGING PROSCENIUM ELEVATION

SHEET NUMBER

PR-3.04

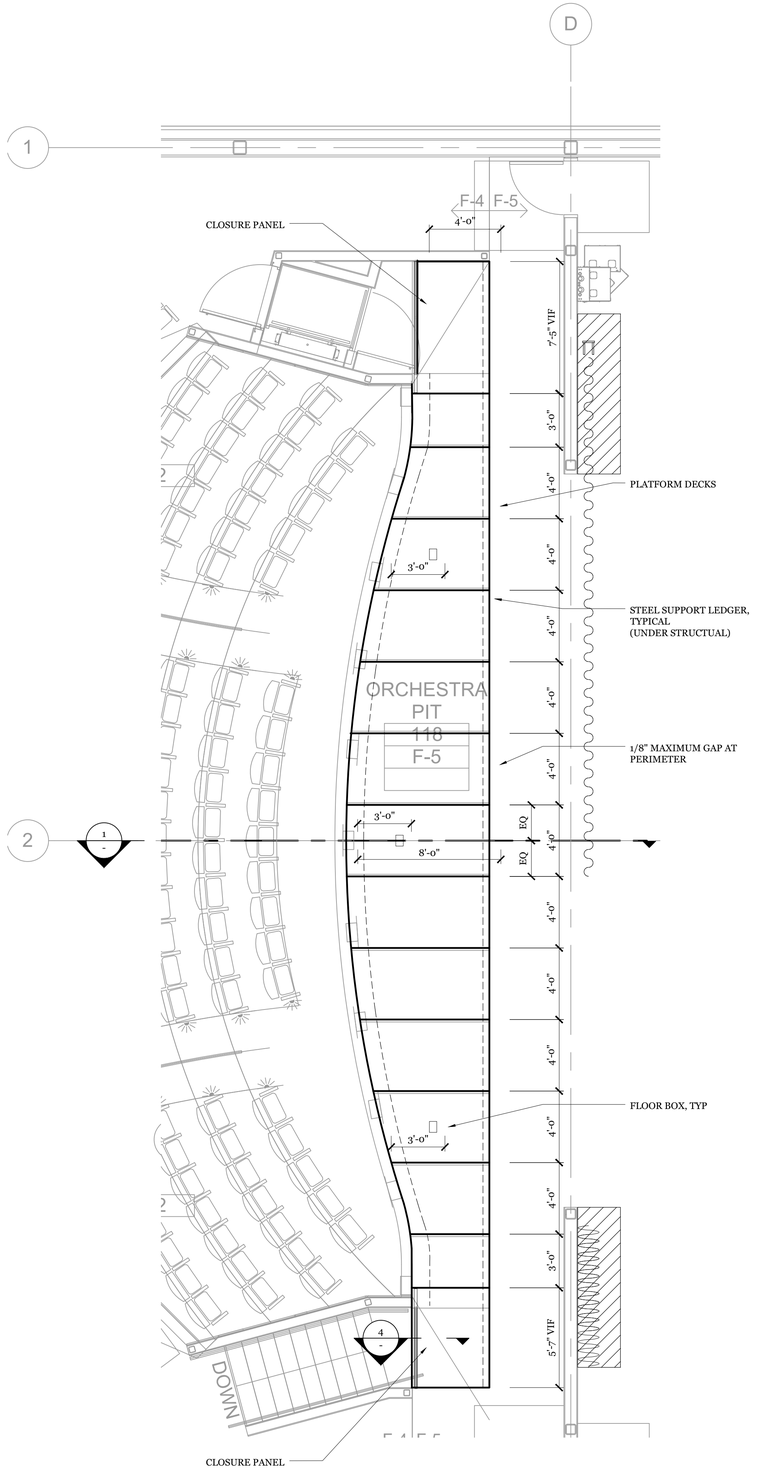

6 PLAN AT PIT FILLER
1/4" = 1'-0"

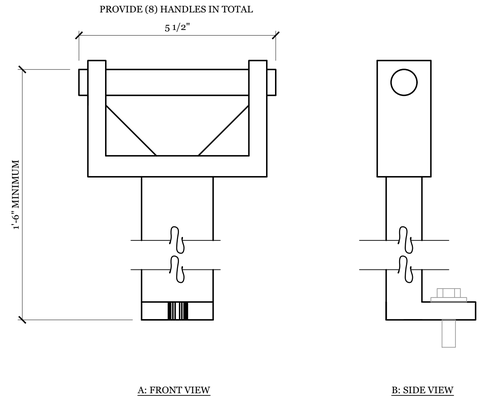

3 DECK LIFTING HANDLE
HALF FULL SIZE

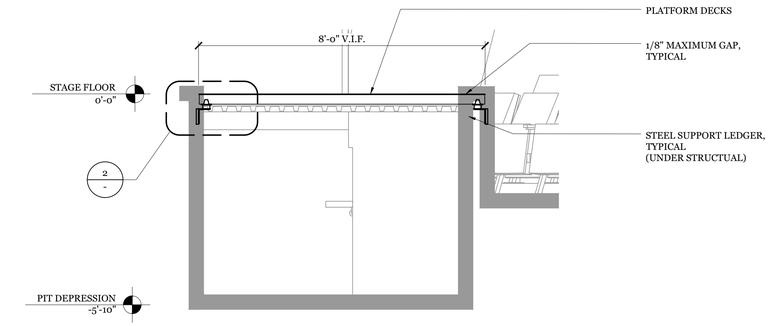

1 PLATFORMS CENTERLINE SECTION
1/2" = 1'-0"

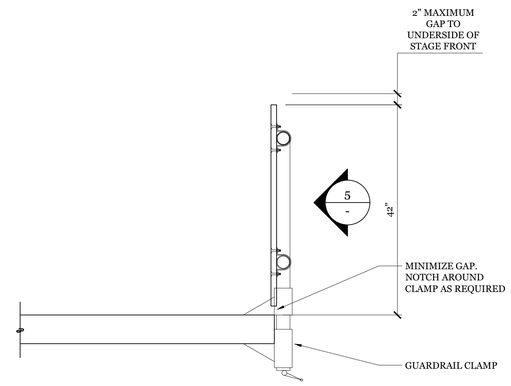

4 CLOSURE PANEL - SIDE VIEW
1 1/2" = 1'-0"

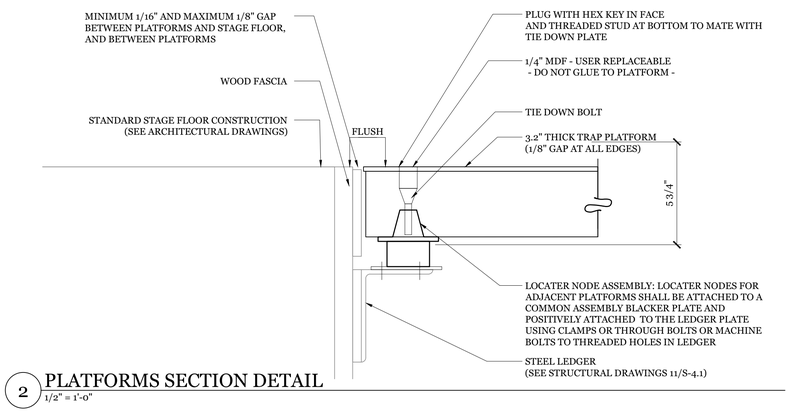

2 PLATFORMS SECTION DETAIL
1/2" = 1'-0"

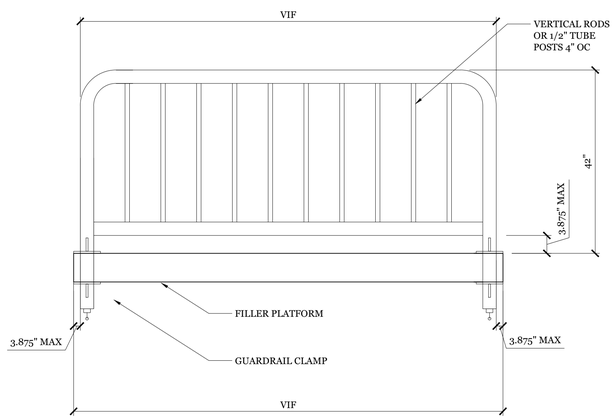

5 CLOSURE PANEL - REAR VIEW
1 1/2" = 1'-0"

RIGGING GENERAL NOTES

1. THIS SHEET IS INTENDED TO PROVIDE RIGGING AND DRAPERY INFORMATION ONLY. REFERENCE OTHER ARCHITECTURAL AND ENGINEERING DOCUMENTS FOR RELATED AREAS.
2. SHOW ATTACHMENT BACKING REQUIREMENTS ON SHOP DRAWINGS.
3. COORDINATE WITH ALL RELATED TRADES TO MAINTAIN CLEARANCES FOR RIGGING SYSTEMS INSTALLATION AND SAFE AND EFFECTIVE USE. NO PIPE, CONDUIT, RACEWAY, DUCT, NOR ANY OTHER OBSTRUCTION SHALL BE PERMITTED IN RIGGING CLEAR ZONES, OR WITHIN 6" OF ANY MOVING COMPONENT OF RIGGING SYSTEMS, INCLUDING LIFT LINES.
4. SEE SPECIFICATIONS FOR PRODUCT AND INSTALLATION CRITERIA.
5. PRODUCTION SYSTEMS SHOWN ARE DEFERRED APPROVAL. INSTALLATION OF ALL DEFERRED APPROVAL ITEMS SHALL NOT BE STARTED UNTIL CONTRACTOR'S DRAWINGS, SPECIFICATIONS AND ENGINEERING CALCULATIONS FOR THE ACTUAL SYSTEMS TO BE INSTALLED HAVE BEEN ACCEPTED AND SIGNED BY THE ARCHITECT AND APPROVED BY THE DIVISION OF THE STATE ARCHITECT

ABBREVIATIONS

VIF = VERIFY IN FIELD	CLR = CLEAR
SAD = SEE ARCHITECTURAL DRAWINGS	HL = HOUSE LEFT
SSD = SEE STRUCTURAL DRAWINGS	HR = HOUSE RIGHT
SMD = SEE MECHANICAL DRAWINGS	SR = STAGE RIGHT
SED = SEE ELECTRICAL DRAWINGS	SL = STAGE LEFT
AFF = ABOVE FINISHED FLOOR	SIM. = SIMILAR
NIC = NOT IN CONTRACT	OPP. = OPPOSITE
HT = HEIGHT	NTS = NOT TO SCALE
TYP = TYPICAL	MIN = MINIMUM
RWL = RECOMMENDED WORKING LOAD	MAX = MAXIMUM

QUATTROCCHI KWOK ARCHITECTS
Main Office:
636 Fifth Street, Santa Rosa, CA 95404
Pleasanton Office:
600 Main Street, Suite E,
Pleasanton, CA 94566
(707) 576-0829

LICENSED ARCHITECT
JIM THEISS
LICENSE # C22643
EXP JUNE 30, 2019
STATE OF CALIFORNIA

SIGNED: DECEMBER 14, 2018

The Shalleck Collaborative Inc.
Planning and Design of Theatres | Production Systems | AV
1633 Martin Luther King Jr Way
Berkeley, CA 94709
tel 415-956-1000
www.shalleck.com

FREEDOM HIGH SCHOOL

PERFORMING ARTS AND CTE FACILITIES

1050 NEROLY RD
OAKLEY, CA 94561

LIBERTY UNION HIGH SCHOOL DISTRICT

ARCH PROJECT NO: 1739.00
DRAWN BY:
DRAWING SCALE:
PTN: 61721-0068

BID SET

AUGUST 13, 2019

SHEET TITLE

PRODUCTION RIGGING PIT FILLER

SHEET NUMBER

PR-4.01

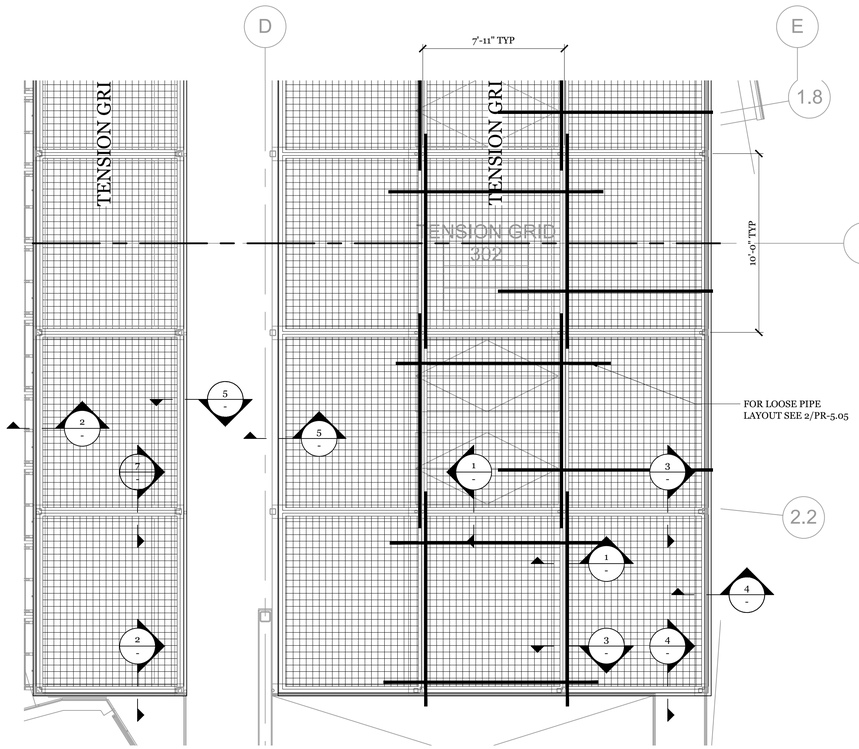

6 ENLARGED DETAIL AT TENSION GRID
1/4" = 1'-0"

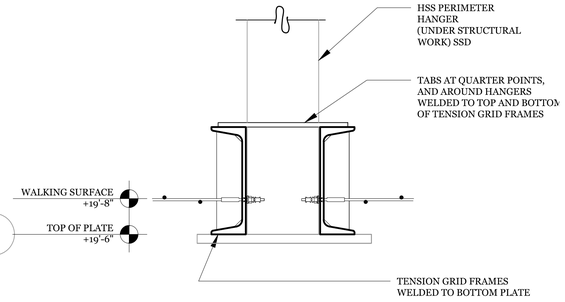

3 SECTION DETAIL AT PERIMETER FRAME
3" = 1'-0"

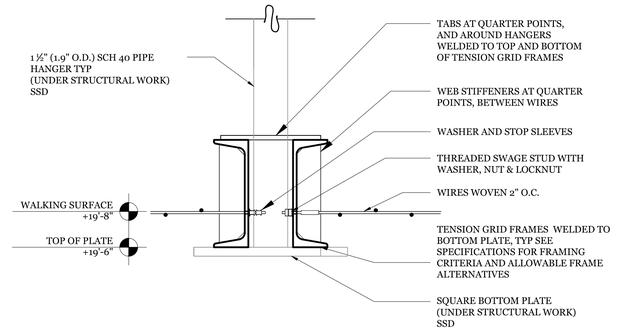

1 SECTION DETAIL AT INTERIOR TENSION GRID JOINT
3" = 1'-0"

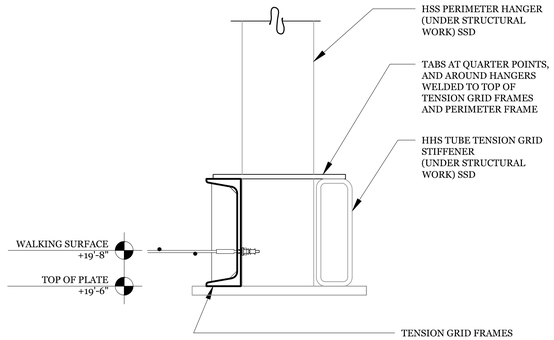

4 SECTION DETAIL AT PERIMETER FRAME
3" = 1'-0"

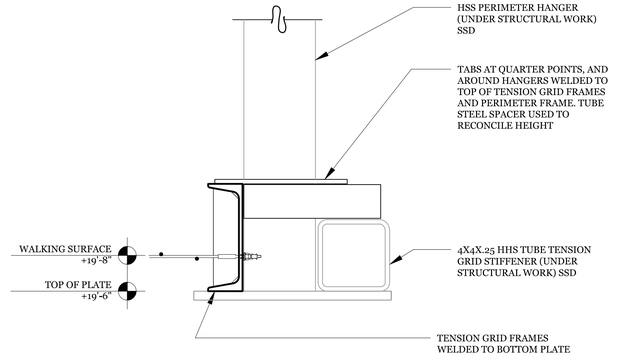

2 SECTION DETAIL AT PERIMETER FRAME
3" = 1'-0"

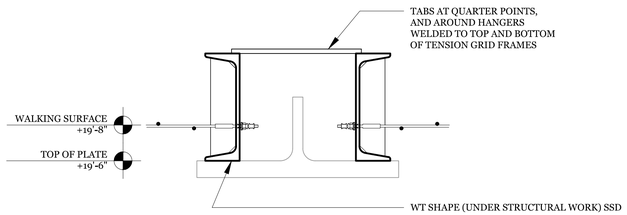

7 SECTION DETAIL AT PERIMETER FRAME
3" = 1'-0"

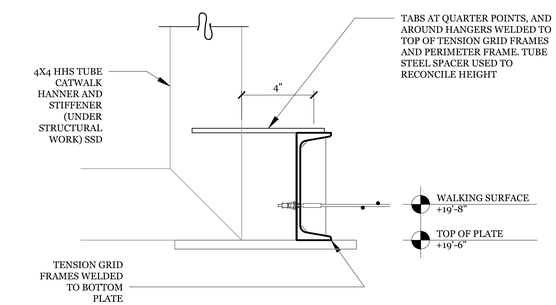

5 SECTION DETAIL AT PERIMETER FRAME
3" = 1'-0"

RIGGING GENERAL NOTES

1. THIS SHEET IS INTENDED TO PROVIDE RIGGING AND DRAPERY INFORMATION ONLY. REFERENCE OTHER ARCHITECTURAL AND ENGINEERING DOCUMENTS FOR RELATED AREAS.
2. SHOW ATTACHMENT BACKING REQUIREMENTS ON SHOP DRAWINGS.
3. COORDINATE WITH ALL RELATED TRADES TO MAINTAIN CLEARANCES FOR RIGGING SYSTEMS INSTALLATION AND SAFE AND EFFECTIVE USE. NO PIPE, CONDUIT, RACEWAY, DUCT, NOR ANY OTHER OBSTRUCTION SHALL BE PERMITTED IN RIGGING CLEAR ZONES, OR WITHIN 6" OF ANY MOVING COMPONENT OF RIGGING SYSTEMS, INCLUDING LIFT LINES.
4. SEE SPECIFICATIONS FOR PRODUCT AND INSTALLATION CRITERIA.
5. PRODUCTION SYSTEMS SHOWN ARE DEFERRED APPROVAL. INSTALLATION OF ALL DEFERRED APPROVAL ITEMS SHALL NOT BE STARTED UNTIL CONTRACTOR'S DRAWINGS, SPECIFICATIONS AND ENGINEERING CALCULATIONS FOR THE ACTUAL SYSTEMS TO BE INSTALLED HAVE BEEN ACCEPTED AND SIGNED BY THE ARCHITECT AND APPROVED BY THE DIVISION OF THE STATE ARCHITECT

ABBREVIATIONS

VIF = VERIFY IN FIELD	CLR = CLEAR
SAD = SEE ARCHITECTURAL DRAWINGS	HL = HOUSE LEFT
SSD = SEE STRUCTURAL DRAWINGS	HR = HOUSE RIGHT
SMD = SEE MECHANICAL DRAWINGS	SR = STAGE RIGHT
SED = SEE ELECTRICAL DRAWINGS	SL = STAGE LEFT
AFF = ABOVE FINISHED FLOOR	SIM. = SIMILAR
NIC = NOT IN CONTRACT	OPP. = OPPOSITE
HT = HEIGHT	NTS = NOT TO SCALE
TYP = TYPICAL	MIN = MINIMUM
RWL = RECOMMENDED WORKING LOAD	MAX = MAXIMUM

QUATTROCCHI KWOK ARCHITECTS
Main Office:
636 Fifth Street, Santa Rosa, CA 95404
Pleasanton Office:
600 Main Street, Suite E,
Pleasanton, CA 94566
(707) 576-0829

LICENSED ARCHITECT
JIM THEISS
LICENSE # C22643
EXP JUNE 30, 2019
STATE OF CALIFORNIA

SIGNED: DECEMBER 14, 2018

The Shalleck Collaborative Inc.
Planning and Design of Theatres | Production Systems | AV
1633 Martin Luther King Jr Way
Berkeley, CA 94709
tel 415-956-1000
www.shalleck.com

FREEDOM HIGH SCHOOL

PERFORMING ARTS AND CTE FACILITIES

1050 NEROLY RD
OAKLEY, CA 94561

LIBERTY UNION HIGH SCHOOL DISTRICT

ARCH PROJECT NO: 1739.00
DRAWN BY:
DRAWING SCALE:
PTN: 61721-0068

BID SET

AUGUST 13, 2019

SHEET TITLE

PRODUCTION RIGGING TENSION GRID DETAIL

SHEET NUMBER

PR-5.01

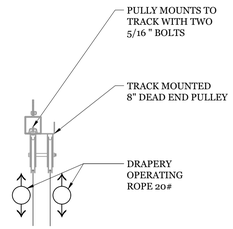

A: LIVE END PULLEY

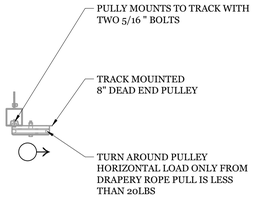

B: DEAD END PULLEY

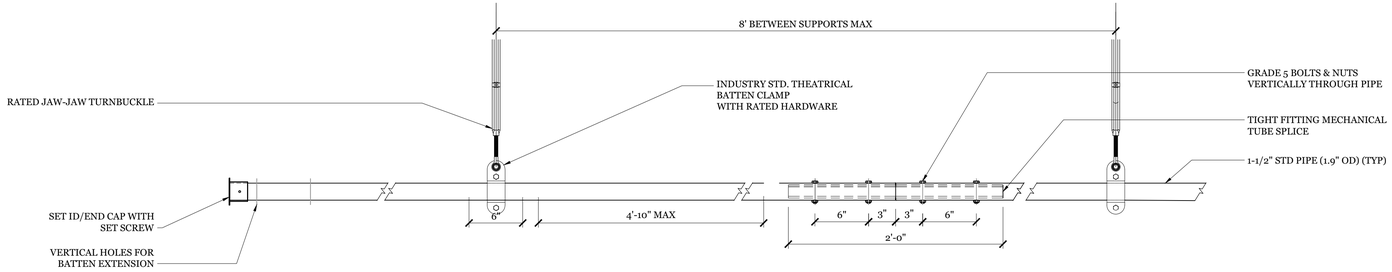

1 TYPICAL BATTEN ATTACHMENT - SINGLE PIPE BATTEN
1-1/2" = 1'-0"

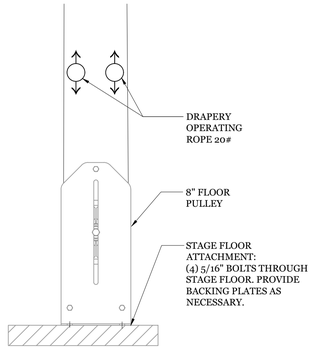

C: DRAPERY FLOOR PULLEY

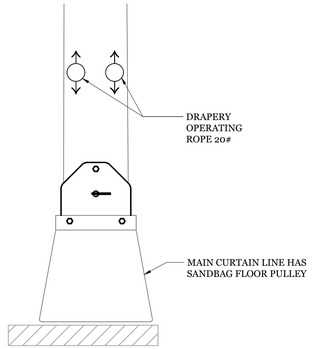

D: DRAPERY FLOOR PULLEY

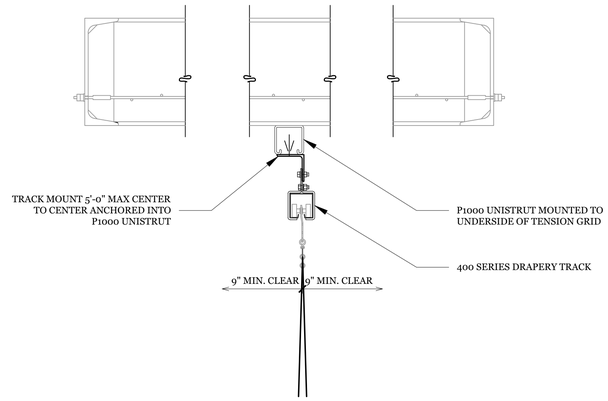

2 DRAPE TRACK MOUNTING UNDER TENSION GRID HANGER
3" = 1'-0"

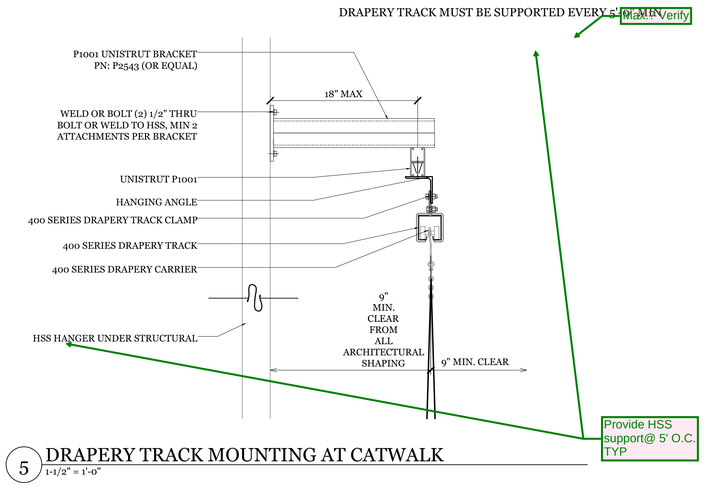

5 DRAPERY TRACK MOUNTING AT CATWALK
1-1/2" = 1'-0"

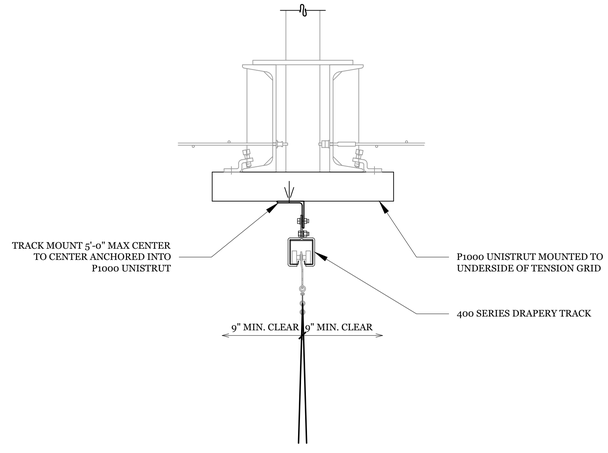

3 DRAPE TRACK MOUNTING UNDER TENSION GRID MODULE
3"=1'-0"

4 DRAPERY PULLY MOUNTING
1" = 1'-0"

RIGGING GENERAL NOTES

1. THIS SHEET IS INTENDED TO PROVIDE RIGGING AND DRAPERY INFORMATION ONLY. REFERENCE OTHER ARCHITECTURAL AND ENGINEERING DOCUMENTS FOR RELATED AREAS.
2. SHOW ATTACHMENT BACKING REQUIREMENTS ON SHOP DRAWINGS.
3. COORDINATE WITH ALL RELATED TRADES TO MAINTAIN CLEARANCES FOR RIGGING SYSTEMS INSTALLATION AND SAFE AND EFFECTIVE USE. NO PIPE, CONDUIT, RACEWAY, DUCT, NOR ANY OTHER OBSTRUCTION SHALL BE PERMITTED IN RIGGING CLEAR ZONES, OR WITHIN 6" OF ANY MOVING COMPONENT OF RIGGING SYSTEMS, INCLUDING LIFT LINES.
4. SEE SPECIFICATIONS FOR PRODUCT AND INSTALLATION CRITERIA.
5. PRODUCTION SYSTEMS SHOWN ARE DEFERRED APPROVAL. INSTALLATION OF ALL DEFERRED APPROVAL ITEMS SHALL NOT BE STARTED UNTIL CONTRACTOR'S DRAWINGS, SPECIFICATIONS AND ENGINEERING CALCULATIONS FOR THE ACTUAL SYSTEMS TO BE INSTALLED HAVE BEEN ACCEPTED AND SIGNED BY THE ARCHITECT AND APPROVED BY THE DIVISION OF THE STATE ARCHITECT

ABBREVIATIONS

VIF = VERIFY IN FIELD	CLR = CLEAR
SAD = SEE ARCHITECTURAL DRAWINGS	HL = HOUSE LEFT
SSD = SEE STRUCTURAL DRAWINGS	HR = HOUSE RIGHT
SMD = SEE MECHANICAL DRAWINGS	SR = STAGE RIGHT
SED = SEE ELECTRICAL DRAWINGS	SL = STAGE LEFT
AFF = ABOVE FINISHED FLOOR	SIM. = SIMILAR
NIC = NOT IN CONTRACT	OPP. = OPPOSITE
HT = HEIGHT	NTS = NOT TO SCALE
TYP = TYPICAL	MIN = MINIMUM
RWL = RECOMMENDED WORKING LOAD	MAX = MAXIMUM

QUATTROCCHI KWOK ARCHITECTS
Main Office:
636 Fifth Street, Santa Rosa, CA 95404
Pleasanton Office:
600 Main Street, Suite E,
Pleasanton, CA 94566
(707) 576-0829

LICENSED ARCHITECT
JIM THEISS
LICENSE # C22643
EXP JUNE 30, 2019
STATE OF CALIFORNIA

SIGNED: DECEMBER 14, 2018

The Shalleck Collaborative Inc.
Planning and Design of Theatres | Production Systems | AV
1533 Martin Luther King Jr Way
Berkeley, CA 94709
tel 415-956-1000
www.shalleck.com

FREEDOM HIGH SCHOOL

PERFORMING ARTS AND CTE FACILITIES

1050 NEROLY RD
OAKLEY, CA 94561

LIBERTY UNION HIGH SCHOOL DISTRICT

ARCH PROJECT NO: 1739.00
DRAWN BY:
DRAWING SCALE:
PTN: 61721-0068

BID SET

AUGUST 13, 2019

SHEET TITLE

PRODUCTION RIGGING MOUNTING DETAILS

SHEET NUMBER

PR-5.02

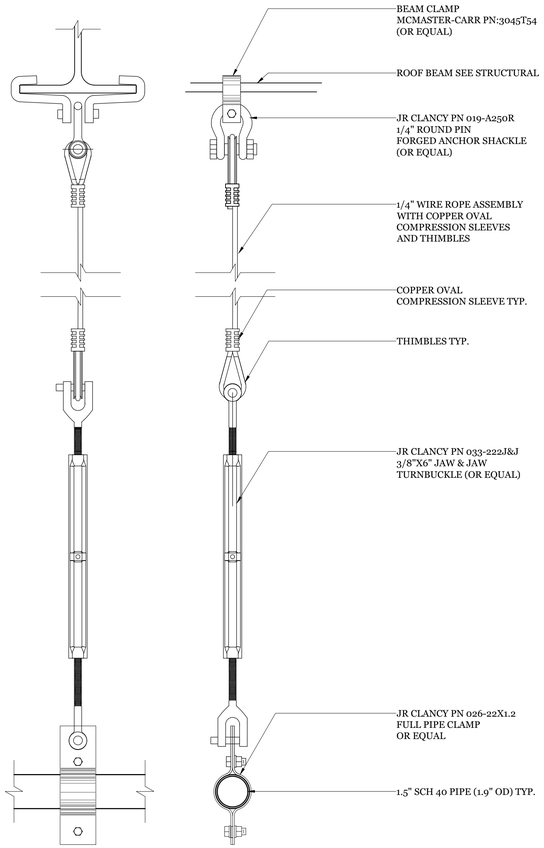

4 DEAD HUNG PIPE BATTEN
3" = 1'-0"

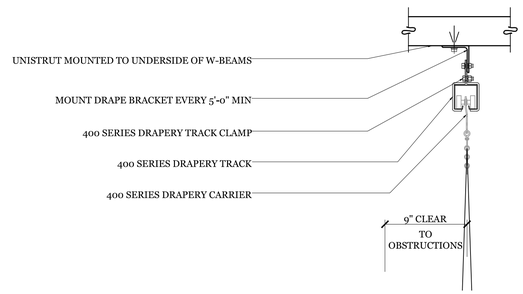

1 DRAPERY TRACK MOUNTING AT CEILING
1-1/2" = 1'-0"

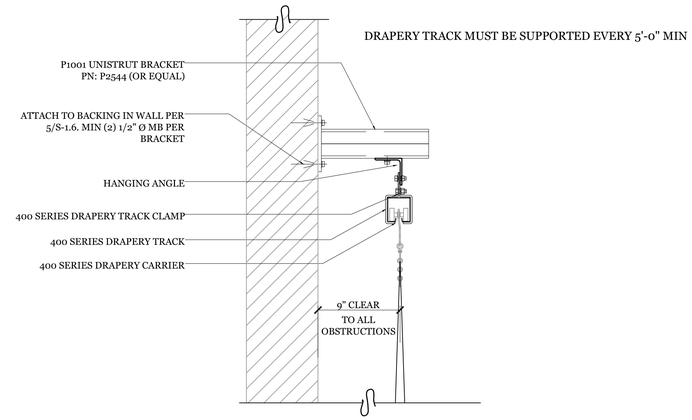

2 DRAPERY TRACK MOUNTING AT SIDE WALLS
1-1/2" = 1'-0"

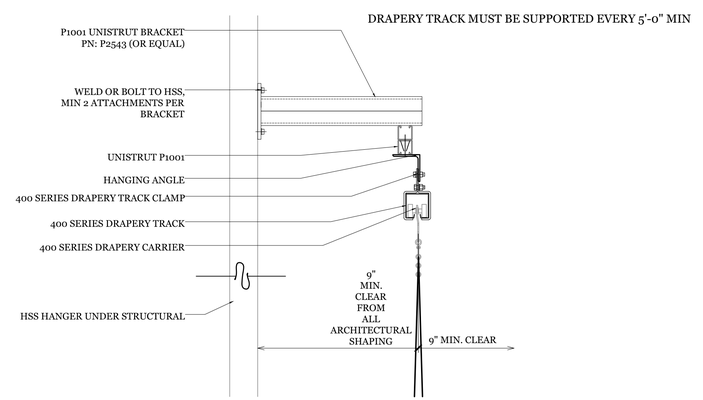

3 DRAPERY TRACK MOUNTING AT CATWALK
1-1/2" = 1'-0"

RIGGING GENERAL NOTES

1. THIS SHEET IS INTENDED TO PROVIDE RIGGING AND DRAPERY INFORMATION ONLY. REFERENCE OTHER ARCHITECTURAL AND ENGINEERING DOCUMENTS FOR RELATED AREAS.
2. SHOW ATTACHMENT BACKING REQUIREMENTS ON SHOP DRAWINGS.
3. COORDINATE WITH ALL RELATED TRADES TO MAINTAIN CLEARANCES FOR RIGGING SYSTEMS INSTALLATION AND SAFE AND EFFECTIVE USE. NO PIPE, CONDUIT, RACEWAY, DUCT, NOR ANY OTHER OBSTRUCTION SHALL BE PERMITTED IN RIGGING CLEAR ZONES, OR WITHIN 6" OF ANY MOVING COMPONENT OF RIGGING SYSTEMS, INCLUDING LIFT LINES.
4. SEE SPECIFICATIONS FOR PRODUCT AND INSTALLATION CRITERIA.
5. PRODUCTION SYSTEMS SHOWN ARE DEFERRED APPROVAL. INSTALLATION OF ALL DEFERRED APPROVAL ITEMS SHALL NOT BE STARTED UNTIL CONTRACTOR'S DRAWINGS, SPECIFICATIONS AND ENGINEERING CALCULATIONS FOR THE ACTUAL SYSTEMS TO BE INSTALLED HAVE BEEN ACCEPTED AND SIGNED BY THE ARCHITECT AND APPROVED BY THE DIVISION OF THE STATE ARCHITECT

ABBREVIATIONS

VIF = VERIFY IN FIELD	CLR = CLEAR
SAD = SEE ARCHITECTURAL DRAWINGS	HL = HOUSE LEFT
SSD = SEE STRUCTURAL DRAWINGS	HR = HOUSE RIGHT
SMD = SEE MECHANICAL DRAWINGS	SR = STAGE RIGHT
SED = SEE ELECTRICAL DRAWINGS	SL = STAGE LEFT
AFF = ABOVE FINISHED FLOOR	SIM. = SIMILAR
NIC = NOT IN CONTRACT	OPP. = OPPOSITE
HT = HEIGHT	NTS = NOT TO SCALE
TYP = TYPICAL	MIN = MINIMUM
RWL = RECOMMENDED WORKING LOAD	MAX = MAXIMUM

QUATTROCCHI KWOK ARCHITECTS
Main Office:
636 Fifth Street, Santa Rosa, CA 95404
Pleasanton Office:
600 Main Street, Suite E,
Pleasanton, CA 94566
(707) 576-0829

LICENSED ARCHITECT
JIM THEISS
LICENSE # C22643
EXP JUNE 30, 2019
STATE OF CALIFORNIA

SIGNED: DECEMBER 14, 2018

The Shalleck Collaborative Inc.
Planning and Design of Theatres | Production Systems | AV
1633 Martin Luther King Jr Way
Berkeley, CA 94709
tel 415-956-1000
www.shalleck.com

FREEDOM HIGH SCHOOL

PERFORMING ARTS AND CTE FACILITIES

1050 NEROLY RD
OAKLEY, CA 94561

LIBERTY UNION HIGH SCHOOL DISTRICT

ARCH PROJECT NO:	1739.00
DRAWN BY:	
DRAWING SCALE:	
PTN:	61721-0068

BID SET

AUGUST 13, 2019

SHEET TITLE

PRODUCTION RIGGING MOUNTING DETAILS

SHEET NUMBER

PR-5.03

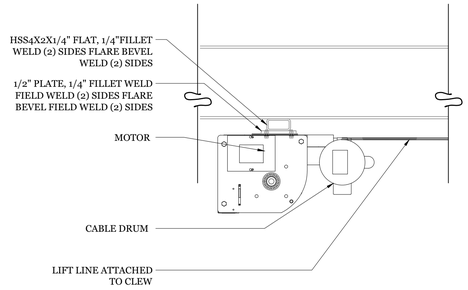

5 MOUNTING VIEW OF STAGEHAND HOIST
1" = 1'-0"

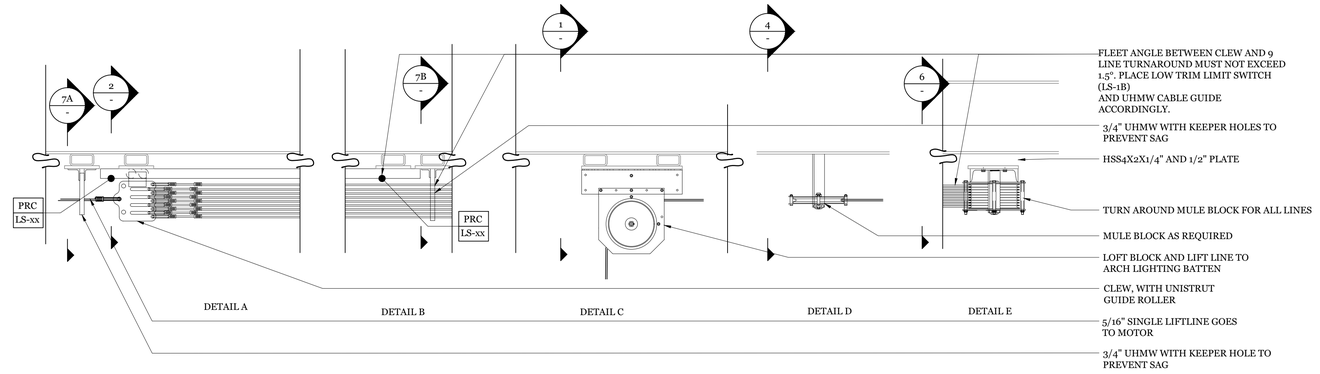

3 ELEVATION OF ARCHITECTURAL LIGHTING HOIST
1" = 1'-0"

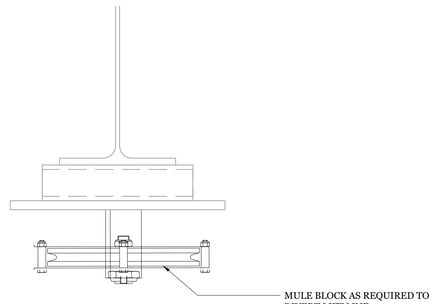

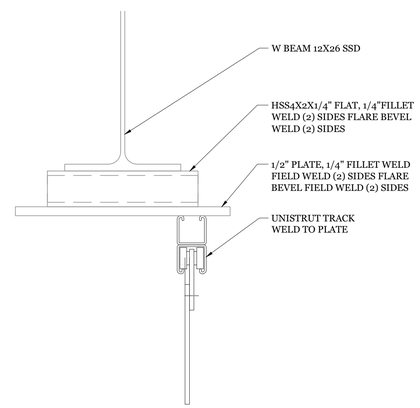

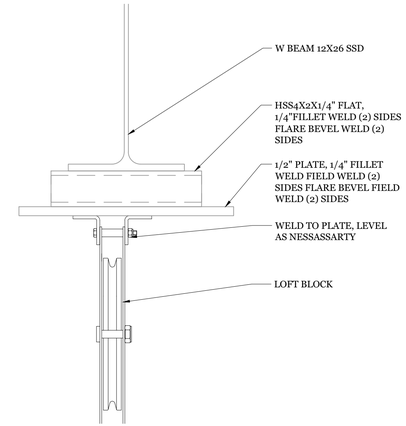

4 SECTION CLEW
3" = 1'-0"

2 SECTION CLEW
3" = 1'-0"

1 ARCHITECTURAL LIGHTING LOFTBLOCK
3" = 1'-0"

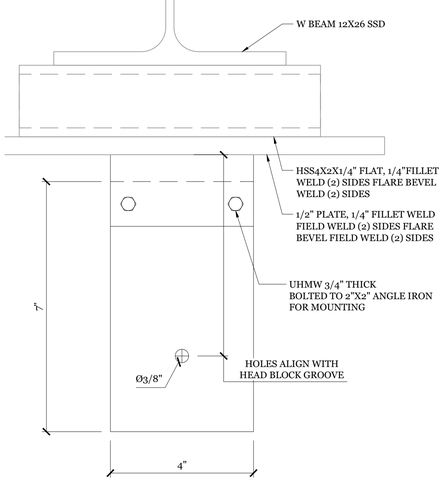

7A: GUIDE FOR MAIN LIFT LINE

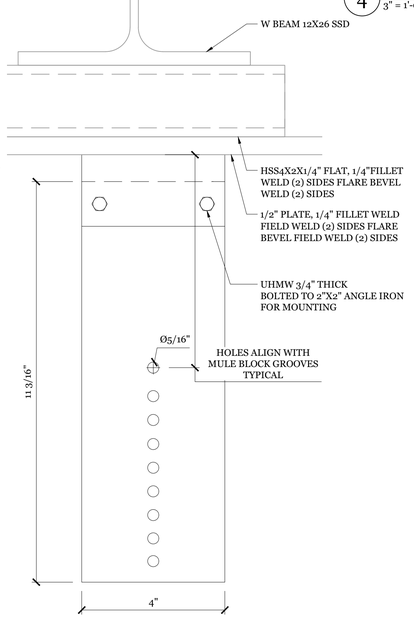

7B: GUIDE FOR INDIVIDUAL LIFT LINES

7 UHMW FOR CABLE GUIDE BLOCKS
6" = 1'-0"

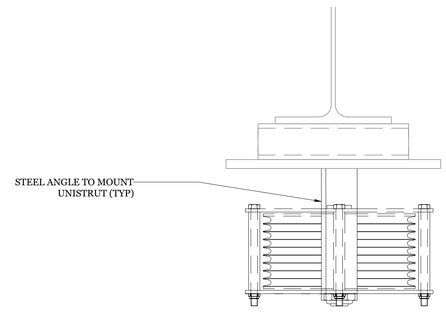

6 SECTION AT ARCHITECTURAL LIGHTING HOIST
3" = 1'-0"

RIGGING GENERAL NOTES

1. THIS SHEET IS INTENDED TO PROVIDE RIGGING AND DRAPERY INFORMATION ONLY. REFERENCE OTHER ARCHITECTURAL AND ENGINEERING DOCUMENTS FOR RELATED AREAS.
2. SHOW ATTACHMENT BACKING REQUIREMENTS ON SHOP DRAWINGS.
3. COORDINATE WITH ALL RELATED TRADES TO MAINTAIN CLEARANCES FOR RIGGING SYSTEMS INSTALLATION AND SAFE AND EFFECTIVE USE. NO PIPE, CONDUIT, RACEWAY, DUCT, NOR ANY OTHER OBSTRUCTION SHALL BE PERMITTED IN RIGGING CLEAR ZONES, OR WITHIN 6" OF ANY MOVING COMPONENT OF RIGGING SYSTEMS, INCLUDING LIFT LINES.
4. SEE SPECIFICATIONS FOR PRODUCT AND INSTALLATION CRITERIA.
5. PRODUCTION SYSTEMS SHOWN ARE DEFERRED APPROVAL. INSTALLATION OF ALL DEFERRED APPROVAL ITEMS SHALL NOT BE STARTED UNTIL CONTRACTOR'S DRAWINGS, SPECIFICATIONS AND ENGINEERING CALCULATIONS FOR THE ACTUAL SYSTEMS TO BE INSTALLED HAVE BEEN ACCEPTED AND SIGNED BY THE ARCHITECT AND APPROVED BY THE DIVISION OF THE STATE ARCHITECT

ABBREVIATIONS

VIF = VERIFY IN FIELD
SAD = SEE ARCHITECTURAL DRAWINGS
SSD = SEE STRUCTURAL DRAWINGS
SMD = SEE MECHANICAL DRAWINGS
SED = SEE ELECTRICAL DRAWINGS
AFF = ABOVE FINISHED FLOOR
NIC = NOT IN CONTRACT
HT = HEIGHT
TYP = TYPICAL
RWL = RECOMMENDED WORKING LOAD
CLR = CLEAR
HL = HOUSE LEFT
HR = HOUSE RIGHT
SR = STAGE RIGHT
SL = STAGE LEFT
SIM. = SIMILAR
OPP. = OPPOSITE
NTS = NOT TO SCALE
MIN = MINIMUM
MAX = MAXIMUM

QUATTROCCHI KWOK ARCHITECTS
Main Office:
636 Fifth Street, Santa Rosa, CA 95404
Pleasanton Office:
600 Main Street, Suite E,
Pleasanton, CA 94566
(707) 576-0829

LICENSED ARCHITECT
JIM THEISS
LICENSE # C22643
EXP JUNE 30, 2019
STATE OF CALIFORNIA

SIGNED: DECEMBER 14, 2018

The Shalleck Collaborative Inc.
Planning and Design of Theatres | Production Systems | AV
1533 Martin Luther King Jr Way
Berkeley, CA 94709
tel 415-956-1000
www.shalleck.com

FREEDOM HIGH SCHOOL

PERFORMING ARTS AND CTE FACILITIES

1050 NEROLY RD
OAKLEY, CA 94561

LIBERTY UNION HIGH SCHOOL DISTRICT

ARCH PROJECT NO: 1739.00
DRAWN BY:
DRAWING SCALE:
PTN: 61721-0068

BID SET

AUGUST 13, 2019

SHEET TITLE

PRODUCTION RIGGING MOUNTING DETAILS

SHEET NUMBER

PR-5.04

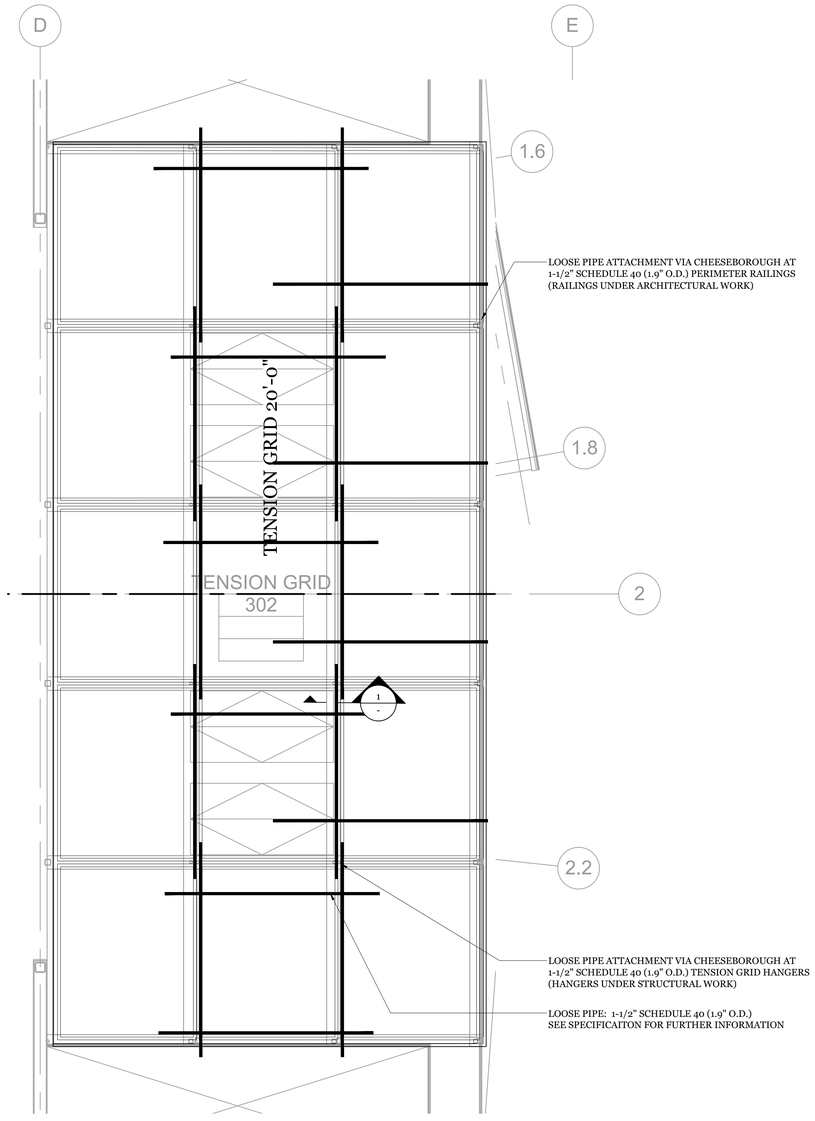

2 PRODUCTION RIGGING DETAIL PLAN - LOOSE PIPE LAYOUT
1/4" = 1'-0"

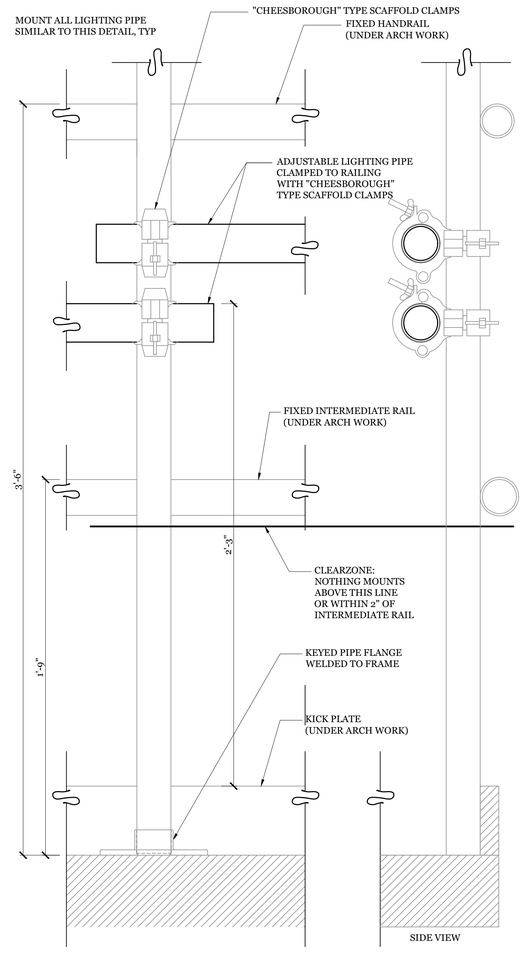

1 PIPE WITH CHEESEBOROUGHS MOUNTING DETAIL
3" = 1'-0"

RIGGING GENERAL NOTES

1. THIS SHEET IS INTENDED TO PROVIDE RIGGING AND DRAPERY INFORMATION ONLY. REFERENCE OTHER ARCHITECTURAL AND ENGINEERING DOCUMENTS FOR RELATED AREAS.
2. SHOW ATTACHMENT BACKING REQUIREMENTS ON SHOP DRAWINGS.
3. COORDINATE WITH ALL RELATED TRADES TO MAINTAIN CLEARANCES FOR RIGGING SYSTEMS INSTALLATION AND SAFE AND EFFECTIVE USE. NO PIPE, CONDUIT, RACEWAY, DUCT, NOR ANY OTHER OBSTRUCTION SHALL BE PERMITTED IN RIGGING CLEAR ZONES, OR WITHIN 6" OF ANY MOVING COMPONENT OF RIGGING SYSTEMS, INCLUDING LIFT LINES.
4. SEE SPECIFICATIONS FOR PRODUCT AND INSTALLATION CRITERIA.
5. PRODUCTION SYSTEMS SHOWN ARE DEFERRED APPROVAL. INSTALLATION OF ALL DEFERRED APPROVAL ITEMS SHALL NOT BE STARTED UNTIL CONTRACTOR'S DRAWINGS, SPECIFICATIONS AND ENGINEERING CALCULATIONS FOR THE ACTUAL SYSTEMS TO BE INSTALLED HAVE BEEN ACCEPTED AND SIGNED BY THE ARCHITECT AND APPROVED BY THE DIVISION OF THE STATE ARCHITECT

ABBREVIATIONS

VIF = VERIFY IN FIELD	CLR = CLEAR
SAD = SEE ARCHITECTURAL DRAWINGS	HL = HOUSE LEFT
SSD = SEE STRUCTURAL DRAWINGS	HR = HOUSE RIGHT
SMD = SEE MECHANICAL DRAWINGS	SR = STAGE RIGHT
SED = SEE ELECTRICAL DRAWINGS	SL = STAGE LEFT
AFF = ABOVE FINISHED FLOOR	SIM. = SIMILAR
NIC = NOT IN CONTRACT	OPP. = OPPOSITE
HT = HEIGHT	NTS = NOT TO SCALE
TYP = TYPICAL	MIN = MINIMUM
RWL = RECOMMENDED WORKING LOAD	MAX = MAXIMUM

QUATTROCCHI KWOK ARCHITECTS
Main Office:
636 Fifth Street, Santa Rosa, CA 95404
Pleasanton Office:
600 Main Street, Suite E,
Pleasanton, CA 94566
(707) 576-0829

LICENSED ARCHITECT
JIM THEISS
LICENSE # C22643
EXP JUNE 30, 2019
STATE OF CALIFORNIA

SIGNED: DECEMBER 14, 2018

The Shalleck Collaborative Inc.
Planning and Design of Theatres | Production Systems | AV
1533 Martin Luther King Jr Way
Berkeley, CA 94709
tel 415-956-1000
www.shalleck.com

FREEDOM HIGH SCHOOL

PERFORMING ARTS AND CTE FACILITIES

1050 NEROLY RD
OAKLEY, CA 94561

LIBERTY UNION HIGH SCHOOL DISTRICT

ARCH PROJECT NO: 1739.00
DRAWN BY:
DRAWING SCALE:
PTN: 61721-0068

BID SET

AUGUST 13, 2019

SHEET TITLE

PRODUCTION RIGGING LOOSE PIPE DETAIL

SHEET NUMBER

PR-5.05

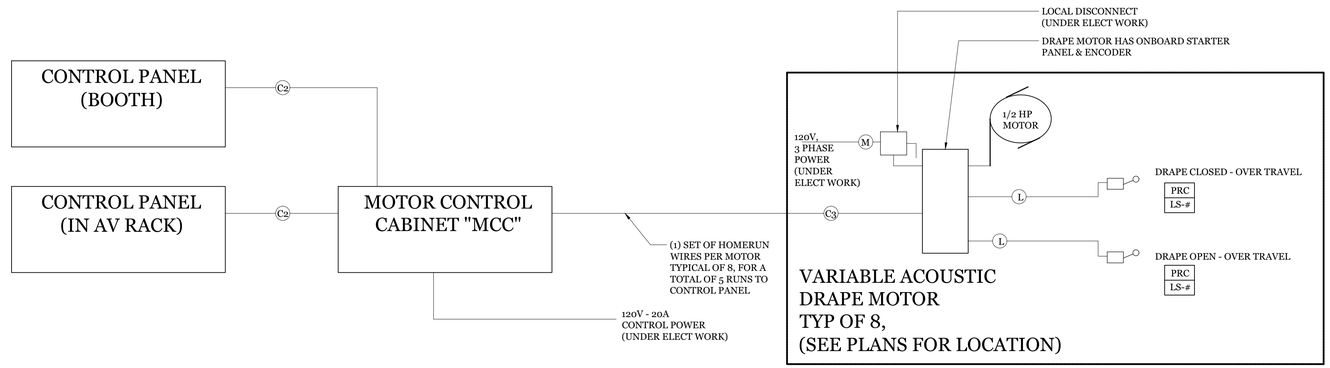

1 VARIABLE ACOUSTIC DRAPE RISER
NO SCALE

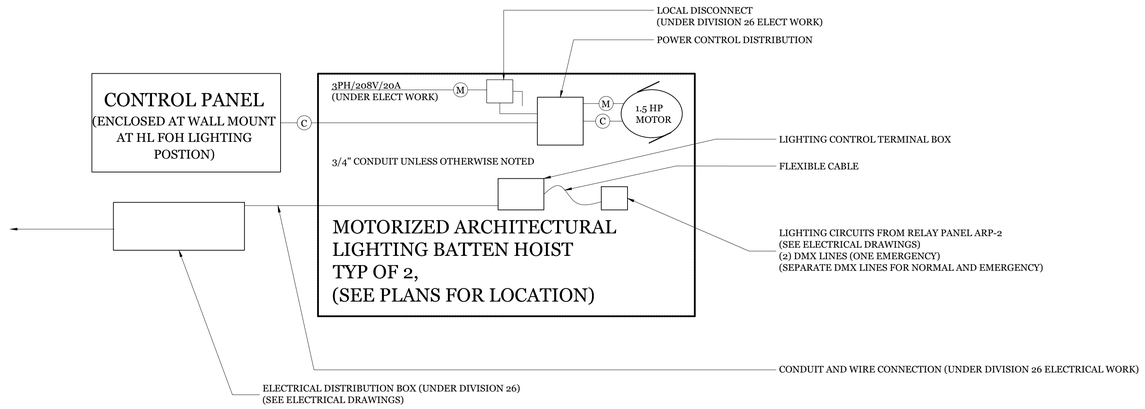

2 ARCHITECTURAL LIGHTING BATTEN RISER
NO SCALE

VARIABLE ACOUSTIC DRAPERY SCHEDULE

DRAPE	WIDTH	HEIGHT	FULLNESS	WEIGHT	COLOR	SQUARE FOOTAGE	MOUNTING
VA-1	43'-0"	16'-0"	50%	32oz	BLACK	690	1/PR-5.03
VA-2	27'-3"	16'-0"	50%	32oz	BLACK	436	1/PR-5.03
VA-3	30'-0"	16'-0"	50%	32oz	BLACK	480	2/PR-5.03
VA-4	19'-6"	12'-0"	50%	32oz	BLACK	235	2/PR-5.03
VA-5	47'-9"	16'-0"	50%	32oz	BLACK	764	2/PR-5.03
VA-6	23'-3"	12'-0"	50%	32oz	BLACK	280	2/PR-5.03
VA-7a	30'-0"	10'-0"	50%	32oz	BLACK	300	3/PR-5.03
VA-7b	30'-0"	10'-0"	50%	32oz	BLACK	300	3/PR-5.03
VA-8a	25'-9"	10'-0"	50%	32oz	BLACK	258	3/PR-5.03
VA-8b	25'-9"	10'-0"	50%	32oz	BLACK	258	3/PR-5.03
TOTAL VARIABLE ACOUSTIC DRAPERY SQUARE FOOTAGE:						4001	

NOTE: VERIFY IN FIELD. SCHEDULED AREAS FOR DRAPES ARE MINIMUM, AND DRAPE AREA IS TO BE MAXIMIZED AS FIELD CONDITIONS ALLOW.

3 VARIABLE ACOUSTIC DRAPERY SCHEDULE
-

RIGGING GENERAL NOTES

1. THIS SHEET IS INTENDED TO PROVIDE RIGGING AND DRAPERY INFORMATION ONLY. REFERENCE OTHER ARCHITECTURAL AND ENGINEERING DOCUMENTS FOR RELATED AREAS.
2. SHOW ATTACHMENT BACKING REQUIREMENTS ON SHOP DRAWINGS.
3. COORDINATE WITH ALL RELATED TRADES TO MAINTAIN CLEARANCES FOR RIGGING SYSTEMS INSTALLATION AND SAFE AND EFFECTIVE USE. NO PIPE, CONDUIT, RACEWAY, DUCT, NOR ANY OTHER OBSTRUCTION SHALL BE PERMITTED IN RIGGING CLEAR ZONES, OR WITHIN 6" OF ANY MOVING COMPONENT OF RIGGING SYSTEMS, INCLUDING LIFT LINES.
4. SEE SPECIFICATIONS FOR PRODUCT AND INSTALLATION CRITERIA.
5. PRODUCTION SYSTEMS SHOWN ARE DEFERRED APPROVAL. INSTALLATION OF ALL DEFERRED APPROVAL ITEMS SHALL NOT BE STARTED UNTIL CONTRACTOR'S DRAWINGS, SPECIFICATIONS AND ENGINEERING CALCULATIONS FOR THE ACTUAL SYSTEMS TO BE INSTALLED HAVE BEEN ACCEPTED AND SIGNED BY THE ARCHITECT AND APPROVED BY THE DIVISION OF THE STATE ARCHITECT

ABBREVIATIONS

VIF = VERIFY IN FIELD
SAD = SEE ARCHITECTURAL DRAWINGS
SSD = SEE STRUCTURAL DRAWINGS
SMD = SEE MECHANICAL DRAWINGS
SED = SEE ELECTRICAL DRAWINGS
AFF = ABOVE FINISHED FLOOR
NIC = NOT IN CONTRACT
HT = HEIGHT
TYP = TYPICAL
RWL = RECOMMENDED WORKING LOAD
CLR = CLEAR
HL = HOUSE LEFT
HR = HOUSE RIGHT
SR = STAGE RIGHT
SL = STAGE LEFT
SIM. = SIMILAR
OPP. = OPPOSITE
NTS = NOT TO SCALE
MIN = MINIMUM
MAX = MAXIMUM

QUATTROCCHI KWOK ARCHITECTS
Main Office:
636 Fifth Street, Santa Rosa, CA 95404
Pleasanton Office:
600 Main Street, Suite E,
Pleasanton, CA 94566
(707) 576-0829

LICENSED ARCHITECT
JIM THEISS
LICENSE # C22643
EXP JUNE 30, 2019
STATE OF CALIFORNIA

SIGNED: DECEMBER 14, 2018

The Shalleck Collaborative Inc.
Planning and Design of Theatres | Production Systems | AV
1633 Martin Luther King Jr Way
Berkeley, CA 94709
tel 415-956-1000
www.shalleck.com

FREEDOM HIGH SCHOOL

PERFORMING ARTS AND CTE FACILITIES

1050 NEROLY RD
OAKLEY, CA 94561

LIBERTY UNION HIGH SCHOOL DISTRICT

ARCH PROJECT NO: 1739.00
DRAWN BY:
DRAWING SCALE:
PTN: 61721-0068

BID SET

AUGUST 13, 2019

SHEET TITLE

PRODUCTION RIGGING RISER DIAGRAMS

SHEET NUMBER

PR-5.06

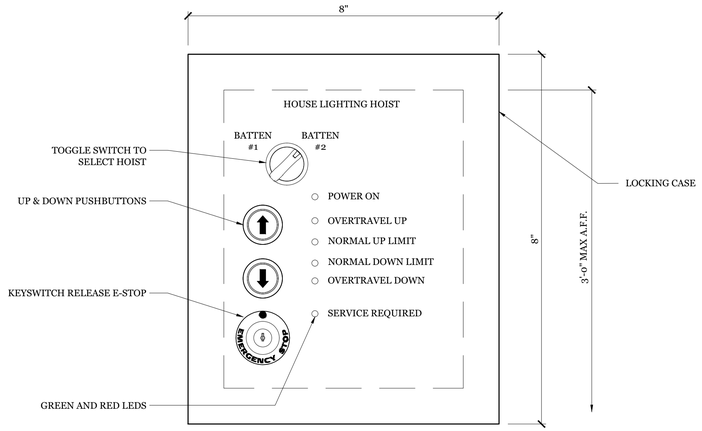

3 ARCHITECTURAL MOTORIZED LIGHTING BATTEN - CONTROL PANEL
HALF FULL SIZE — THIS DEVICE WEIGHS LESS THAN 20#

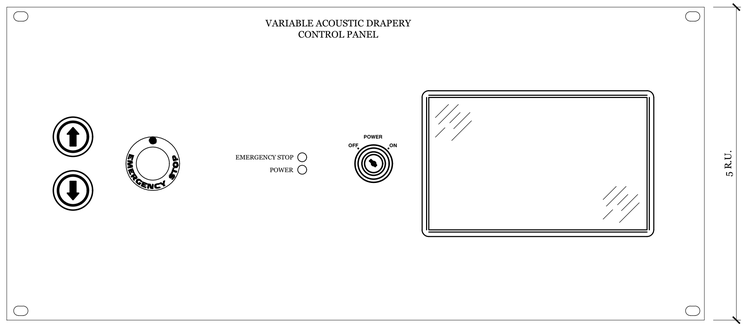

1 VARIABLE ACOUSTIC DRAPERY CONTROL PANEL
HALF FULL SIZE — THIS DEVICE WEIGHS LESS THAN 20#

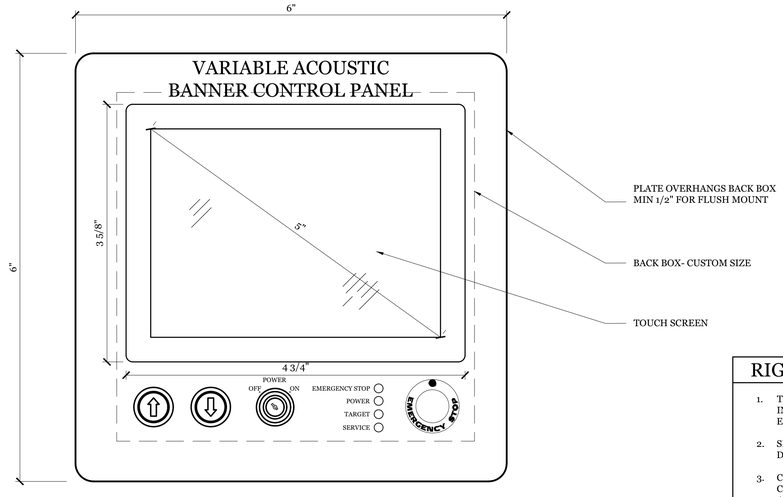

2 VARIABLE ACOUSTIC BANNER CONTROL PANEL
HALF FULL SIZE — THIS DEVICE WEIGHS LESS THAN 20#

RIGGING GENERAL NOTES

1. THIS SHEET IS INTENDED TO PROVIDE RIGGING AND DRAPERY INFORMATION ONLY. REFERENCE OTHER ARCHITECTURAL AND ENGINEERING DOCUMENTS FOR RELATED AREAS.
2. SHOW ATTACHMENT BACKING REQUIREMENTS ON SHOP DRAWINGS.
3. COORDINATE WITH ALL RELATED TRADES TO MAINTAIN CLEARANCES FOR RIGGING SYSTEMS INSTALLATION AND SAFE AND EFFECTIVE USE. NO PIPE, CONDUIT, RACEWAY, DUCT, NOR ANY OTHER OBSTRUCTION SHALL BE PERMITTED IN RIGGING CLEAR ZONES, OR WITHIN 6" OF ANY MOVING COMPONENT OF RIGGING SYSTEMS, INCLUDING LIFT LINES.
4. SEE SPECIFICATIONS FOR PRODUCT AND INSTALLATION CRITERIA.
5. PRODUCTION SYSTEMS SHOWN ARE DEFERRED APPROVAL. INSTALLATION OF ALL DEFERRED APPROVAL ITEMS SHALL NOT BE STARTED UNTIL CONTRACTOR'S DRAWINGS, SPECIFICATIONS AND ENGINEERING CALCULATIONS FOR THE ACTUAL SYSTEMS TO BE INSTALLED HAVE BEEN ACCEPTED AND SIGNED BY THE ARCHITECT AND APPROVED BY THE DIVISION OF THE STATE ARCHITECT

ABBREVIATIONS

VIF = VERIFY IN FIELD	CLR = CLEAR
SAD = SEE ARCHITECTURAL DRAWINGS	HL = HOUSE LEFT
SSD = SEE STRUCTURAL DRAWINGS	HR = HOUSE RIGHT
SMD = SEE MECHANICAL DRAWINGS	SR = STAGE RIGHT
SED = SEE ELECTRICAL DRAWINGS	SL = STAGE LEFT
AFF = ABOVE FINISHED FLOOR	SIM. = SIMILAR
NIC = NOT IN CONTRACT	OPP. = OPPOSITE
HT = HEIGHT	NTS = NOT TO SCALE
TYP = TYPICAL	MIN = MINIMUM
RWL = RECOMMENDED WORKING LOAD	MAX = MAXIMUM

QUATTROCCHI KWOK ARCHITECTS
Main Office:
636 Fifth Street, Santa Rosa, CA 95404
Pleasanton Office:
600 Main Street, Suite E,
Pleasanton, CA 94566
(707) 576-0829

LICENSED ARCHITECT
JIM THEISS
LICENSE # C22643
EXP JUNE 30, 2019
STATE OF CALIFORNIA

SIGNED: DECEMBER 14, 2018

The Shalleck Collaborative Inc.
Planning and Design of Theatres | Production Systems | AV
1633 Martin Luther King Jr Way
Berkeley, CA 94709
tel 415-956-1000
www.shalleck.com

FREEDOM HIGH SCHOOL

PERFORMING ARTS AND CTE FACILITIES

1050 NEROLY RD
OAKLEY, CA 94561

LIBERTY UNION HIGH SCHOOL DISTRICT

ARCH PROJECT NO: 1739.00
DRAWN BY:
DRAWING SCALE:
PTN: 61721-0068

BID SET

AUGUST 13, 2019

SHEET TITLE

PRODUCTION RIGGING DETAILS

SHEET NUMBER

PR-5.07

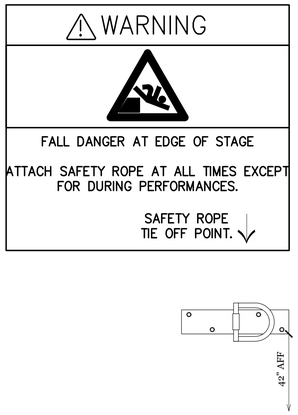

VIEW A: STAGE EDGE SIGN



VIEW B: SAFETY FIRST SIGN



VIEW C: TENSION GRID SIGN

3 RIGGING SYSTEM SIGNAGE
3" = 1'-0"

PROSCENIUM MAIN VALENCE AND MAIN DRAPE SCHEDULE

DRAPERY NUMBER	BI-PART	WIDTH	HEIGHT	# OF PANELS	FULLNESS	WEIGHT	LINER	COLOR	OPERATION	NOTES
MAIN VALENCE	NO	64'-0"	8'-0"	1	50%	26 OZ	Y	STANDARD	-	
MAIN DRAPE	YES	54'-6"	18'-4"	2	50%	26 OZ	Y	STANDARD	4'-0" OVERLAP AT CENTER	
LEGS	NO	8'-0"	18'-4"	6	50%	20 OZ	N	BLACK	WALK ALONG	
TRAVELER	YES	54'-6"	18'-4"	2	50%	20 OZ	N	BLACK	4'-0" OVERLAP AT CENTER	
TABS	NO	5'-0"	15'-9"	6	50%	20 OZ	N	BLACK	WALK ALONG	
US TRAVELER	YES	54'-6"	23'-9"	2	50%	20 OZ	N	BLACK	4'-0" OVERLAP AT CENTER	
CYC	NO	44'-0"	23'-9"	1	0%	IFR POLY	N	WHITE		

5 PROSCENIUM DRAPERY SCHEDULE

RIGGING GENERAL NOTES

1. THIS SHEET IS INTENDED TO PROVIDE RIGGING AND DRAPERY INFORMATION ONLY. REFERENCE OTHER ARCHITECTURAL AND ENGINEERING DOCUMENTS FOR RELATED AREAS.
2. SHOW ATTACHMENT BACKING REQUIREMENTS ON SHOP DRAWINGS.
3. COORDINATE WITH ALL RELATED TRADES TO MAINTAIN CLEARANCES FOR RIGGING SYSTEMS INSTALLATION AND SAFE AND EFFECTIVE USE. NO PIPE, CONDUIT, RACEWAY, DUCT, NOR ANY OTHER OBSTRUCTION SHALL BE PERMITTED IN RIGGING CLEAR ZONES, OR WITHIN 6" OF ANY MOVING COMPONENT OF RIGGING SYSTEMS, INCLUDING LIFT LINES.
4. SEE SPECIFICATIONS FOR PRODUCT AND INSTALLATION CRITERIA.
5. PRODUCTION SYSTEMS SHOWN ARE DEFERRED APPROVAL. INSTALLATION OF ALL DEFERRED APPROVAL ITEMS SHALL NOT BE STARTED UNTIL CONTRACTOR'S DRAWINGS, SPECIFICATIONS AND ENGINEERING CALCULATIONS FOR THE ACTUAL SYSTEMS TO BE INSTALLED HAVE BEEN ACCEPTED AND SIGNED BY THE ARCHITECT AND APPROVED BY THE DIVISION OF THE STATE ARCHITECT

ABBREVIATIONS

VIF = VERIFY IN FIELD
SAD = SEE ARCHITECTURAL DRAWINGS
SSD = SEE STRUCTURAL DRAWINGS
SMD = SEE MECHANICAL DRAWINGS
SED = SEE ELECTRICAL DRAWINGS
AFF = ABOVE FINISHED FLOOR
NIC = NOT IN CONTRACT
HT = HEIGHT
TYP = TYPICAL
RWL = RECOMMENDED WORKING LOAD
CLR = CLEAR
HL = HOUSE LEFT
HR = HOUSE RIGHT
SR = STAGE RIGHT
SL = STAGE LEFT
SIM. = SIMILAR
OPP. = OPPOSITE
NTS = NOT TO SCALE
MIN = MINIMUM
MAX = MAXIMUM

QUATTROCCHI KWOK ARCHITECTS
Main Office:
636 Fifth Street, Santa Rosa, CA 95404
Pleasanton Office:
600 Main Street, Suite E,
Pleasanton, CA 94566
(707) 576-0829

LICENSED ARCHITECT
JIM THEISS
LICENSE # C22643
EXP JUNE 30, 2019
STATE OF CALIFORNIA

SIGNED: DECEMBER 14, 2018

The Shalleck Collaborative Inc.
Planning and Design of Theatres | Production Systems | AV
1533 Martin Luther King Jr Way
Berkeley, CA 94709
tel 415-956-1000
www.shalleck.com

FREEDOM HIGH SCHOOL

PERFORMING ARTS AND CTE FACILITIES

1050 NEROLY RD
OAKLEY, CA 94561

LIBERTY UNION HIGH SCHOOL DISTRICT

ARCH PROJECT NO: 1739.00
DRAWN BY:
DRAWING SCALE:
PTN: 61721-0068

BID SET

AUGUST 13, 2019

SHEET TITLE

PRODUCTION RIGGING SIGNAGE

SHEET NUMBER

PR-5.08

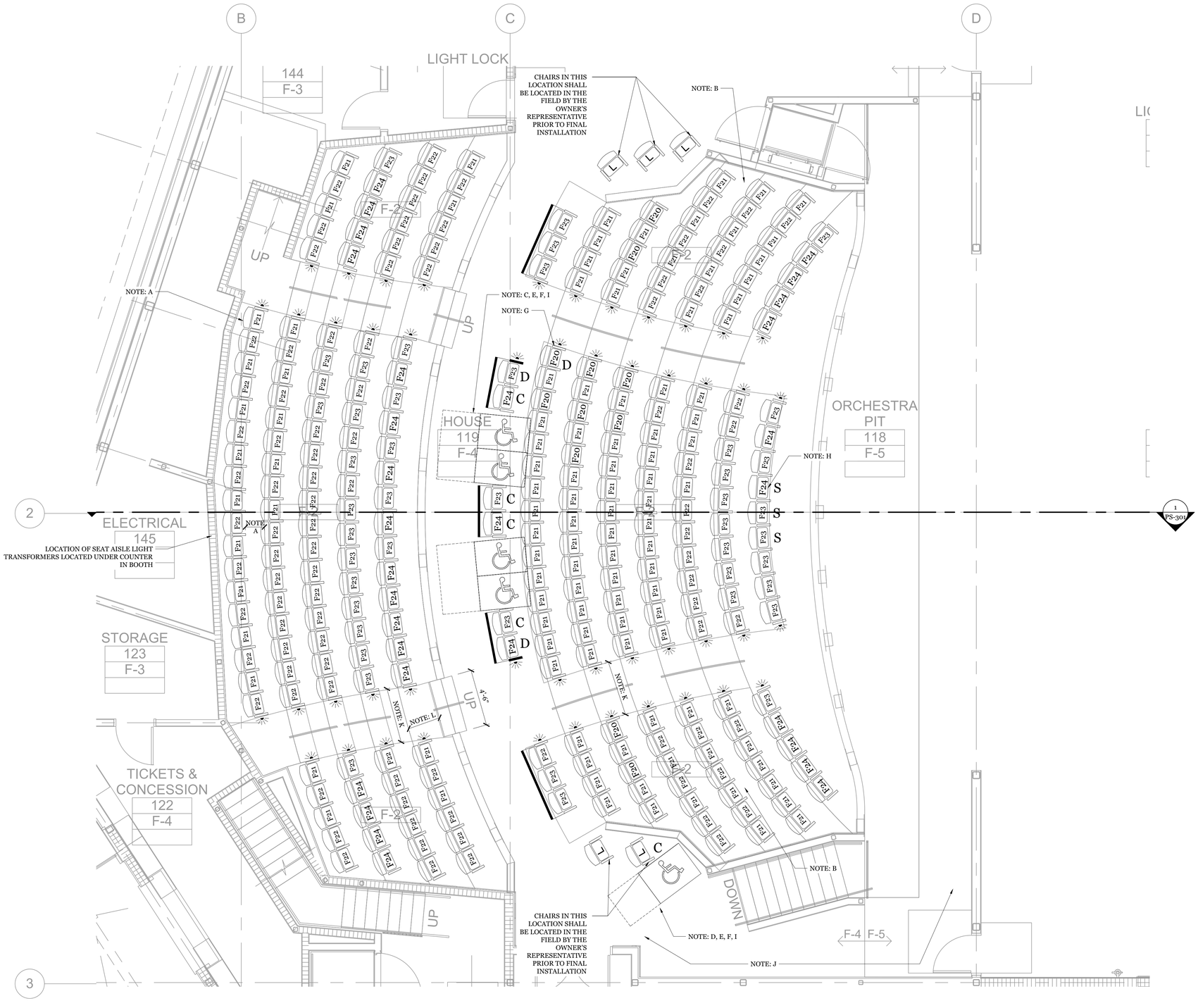

1 SEATING PLAN AT MAIN LEVEL
1/4" = 1'-0"

KEYED NOTES

A- DOUBLE LOADED ROW WIDTH CALCULATION.
- -HIGHEST COUNT ROW CONTAINS 17 SEATS, WHICH IS 3 MORE THAN 14.
- - REQUIRED CLEAR WIDTH: 12" + (3x.3) = 12.9"
- - ROW WIDTH IS 36" MINUS A CHAIR ENVELOPE OF 22" = 14",
- - REMAINING CLEAR WIDTH IS 14", WHICH IS MORE THAN 12.9"
- - MINIMUM CLEAR WIDTH IS PROVIDED PER 2016 CBC 1029.12.2.1

B- SINGLE LOADED ROW WIDTH CALCULATION
- - HIGHEST COUNT ROW CONTAINS 7 SEATS, WHICH IS 0 MORE THAN 7.
- - REQUIRED CLEAR WIDTH: 12" + (0x.6) = 12"
- - ROW WIDTH IS 36"MINUS A CHAIR ENVELOPE OF 22" = 14 ".
- REMAINING CLEAR WIDTH IS 14", WHICH IS MORE THAN 12"
- - MINIMUM CLEAR WIDTH IS PROVIDED PER 2016 CBC 1029.12.2.2

C- DUAL 66"x 48" WHEELCHAIR SEATING LOCATION WITH FIXED COMPANION SEATS PER 2016 CBC 11B-802.1.2 & FIGURE 11B-802.1.2(b) AND 11B-802.1.3(a)

D- SINGLE 36"X48" WHEELCHAIR SEATING LOCATION WITH FIXED REAR APPROACH PER 2016 CBC 11B-802.1.2 & FIGURE 11B-802.1.2(a) AND 11B-802.1.3(a)

E- FLOOR SLOPE AT WHEELCHAIR SEATING LOCATION TO BE NO STEEPER THAN 1:48 PER 2016 CBC 11B-802.1.1

F- WHEELCHAIR SEATING ALLOWS FOR GUESTS TO SIT SHOULDER TO SHOULDER WITH THE COMPANION SEAT REQUIRED PER 2016 CBC 11B-802.3.1

G- DESIGNATED AISLE SEAT WITH SWING AWAY ARMREST ON AISLE SIDE PER 2016 CBC 11B-802.4.1

H- SEMI-AMBULANT SEATING PROVIDES 24" CLEAR LEGROOM WITH SEAT BOTTOM IN LOWER POSITION PER 2016 CBC 11B-802.5

I- WHEELCHAIR SPACE ADJOINING EGRESS AISLE PER 2016 CBC 11B.802.1.4

J- ACCESSIBLE ROUTE TO PERFORMANCE AREA PER 2016 CBC 11B.206.2.6

K- STEPPED AISLE WITH SEATING ON BOTH SIDES, MINIMUM WIDTH IS 48" PER 2016 CBC 1029.9.1.1. AND CLEAR 23" BETWEEN THE SEATS AND MID-AISLE HANDRAIL PER 2016 CBC 1029.9.1.3. (DISCONTINUOUS HANDRAILS PER 2016 CBC 1029.15.1)
- - HIGHEST COUNT AISLE SERVES 63 SEATS
- - REQUIRED CLEAR WIDTH: (63 x .2) = 12.6"
- - PROVIDED AISLE WIDTH IS 4'-6", WHICH IS MORE THAN 12.6"
- - MINIMUM CLEAR WIDTH IS PROVIDED PER 2016 CBC 1029.61

L- 30" MINIMUM TRANSITION BETWEEN AISLE STAIR AND STEPPED AISLE PER 2016 CBC 1029.10.2.1

SEATING COUNT

ORCHESTRA SEATING:	
-STANDARD FIXED CHAIRS	166
-LOOSE CHAIRS	5
-WHEELCHAIR SPACES	5
PARTERRE SEATING:	
-STANDARD FIXED CHAIRS	124
TOTAL SEATS	300

CODE REQUIREMENTS

		PROVIDED	REQUIRED
	SEATS & ADA SPACES	300	
D	DESIGNATED AISLE SEATS (48 AISLE SEATS) X (.05) = 2.4 3 DESIGNATED AISLE SEATS REQUIRED	3	3
C	WHEELCHAIR SPACES	5	5
S	COMPANION CHAIRS	5	5
	SEMI-AMBULANT SEAT (300 SEATS) X (.01) = 3 3 SEMI-AMBULANT SEATS REQUIRED	3	3

SEATING SYMBOL KEY

C COMPANION SEAT
D DESIGNATED AISLE SEAT
S SEMI-AMBULANT SEAT
L LOOSE SEAT

HEAVY LINE INDICATES DEMOUNTABLE CHAIRS
DEMOUNTABLE SEAT
NUMBER INDICATES SEAT SIZE
INDICATES AISLE LIGHT
36" CLEAR SPACE
36"

36"X48" SINGLE WHEELCHAIR LOCATION
66"X48" DUAL WHEELCHAIR LOCATION
SHOULDER TO SHOULDER ALIGNMENT

SEATING GENERAL NOTES

1. SEAT STAGGER AT CENTER SHALL BE INDUCED BASED UPON FIELD DIMENSIONS.
2. THIS SHEET IS INTENDED TO PROVIDE FIXED THEATRE SEATING INFORMATION ONLY. REFERENCE OTHER ARCHITECTURAL AND ENGINEERING DOCUMENTS FOR RELATED AREAS.

ABBREVIATIONS

VIF = VERIFY IN FIELD	CLR = CLEAR
SAD = SEE ARCHITECTURAL DRAWINGS	HL = HOUSE LEFT
SSD = SEE STRUCTURAL DRAWINGS	HR = HOUSE RIGHT
SMD = SEE MECHANICAL DRAWINGS	SR = STAGE RIGHT
SED = SEE ELECTRICAL DRAWINGS	SL = STAGE LEFT
AFF = ABOVE FINISHED FLOOR	SIM. = SIMILAR
NIC = NOT IN CONTRACT	OPP. = OPPOSITE
HT = HEIGHT	NTS = NOT TO SCALE
TYP = TYPICAL	MIN = MINIMUM
RWL = RECOMMENDED WORKING LOAD	MAX = MAXIMUM

QUATTROCCHI KWOK ARCHITECTS
Main Office:
636 Fifth Street, Santa Rosa, CA 95404
Pleasanton Office:
600 Main Street, Suite E,
Pleasanton, CA 94566
(707) 576-0829

LICENSED ARCHITECT
JIM THEISS
LICENSE # C22643
EXP JUNE 30, 2019
STATE OF CALIFORNIA

SIGNED: DECEMBER 14, 2018

The Shalleck Collaborative Inc.
Planning and Design of Theatres | Production Systems | AV
1533 Martin Luther King Jr Way
Berkeley, CA 94709
tel 415-956-0200
www.shalleck.com

FREEDOM HIGH SCHOOL

PERFORMING ARTS AND CTE FACILITIES

1050 NEROLY RD
OAKLEY, CA 94561

LIBERTY UNION HIGH SCHOOL DISTRICT

ARCH PROJECT NO:	1739.00
DRAWN BY:	
DRAWING SCALE:	
PTN:	61721-0068

BID SET

AUGUST 13, 2019

SHEET TITLE

PRODUCTION SEATING - LEVEL 1 PLAN

SHEET NUMBER

PS-1.01

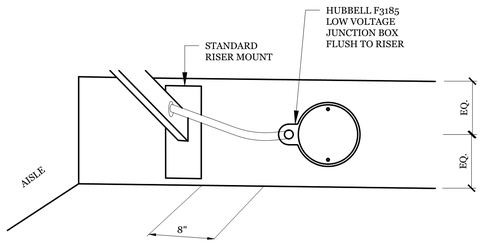

3 JUNCTION BOX ADJACENCY DETAIL - RISER MOUNT - TYP
DOES NOT SCALE

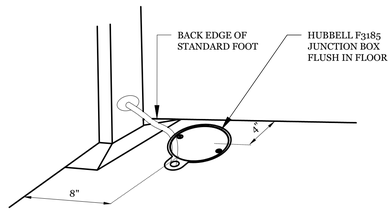

4 JUNCTION BOX ADJACENCY DETAIL - FLOOR MOUNT - TYP
DOES NOT SCALE

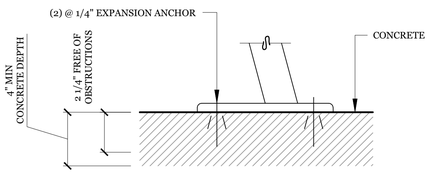

5 FLOOR-MOUNTED SEAT DETAIL - TYPICAL
DOES NOT SCALE

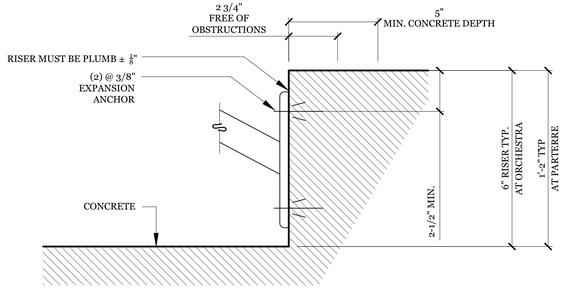

6 RISER-MOUNTED SEAT DETAIL - TYPICAL
DOES NOT SCALE

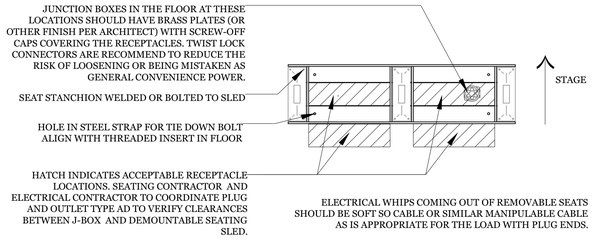

7 DEMOUNTABLE SEAT - MULTIPLE SEAT GANGS AT CROSSAISLE
1"=1'-0"

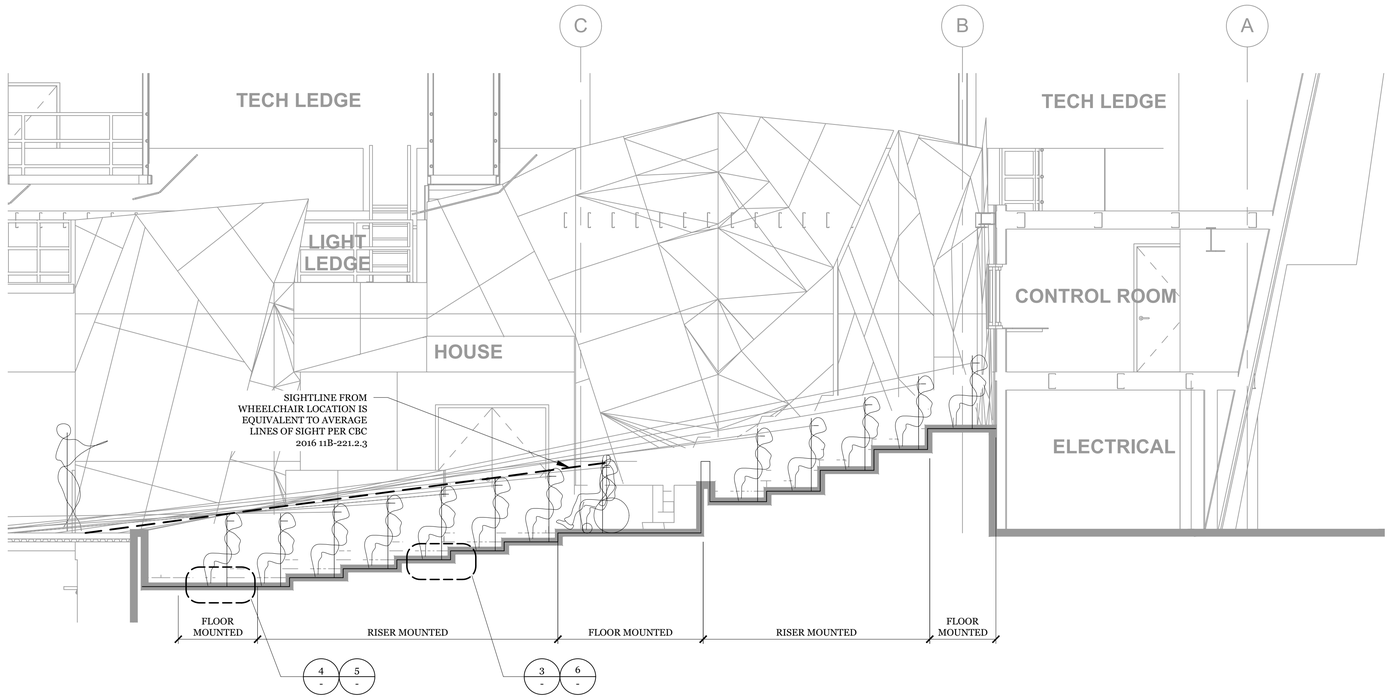

1 CENTERLINE SECTION
1/4" = 1'-0"

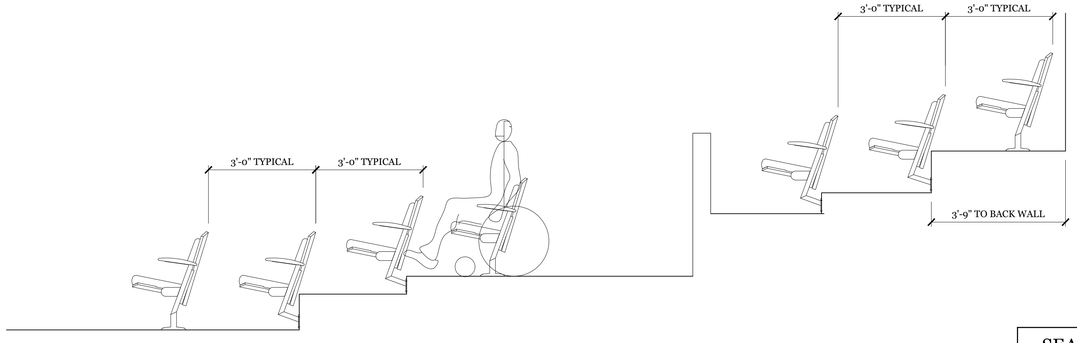

2 SEAT MOUNTING SPACING
1/2" = 1'-0"

SEATING GENERAL NOTES

1. SEAT STAGGER AT CENTER SHALL BE INDUCED BASED UPON FIELD DIMENSIONS.
2. THIS SHEET IS INTENDED TO PROVIDE FIXED THEATRE SEATING INFORMATION ONLY. REFERENCE OTHER ARCHITECTURAL AND ENGINEERING DOCUMENTS FOR RELATED AREAS.

ABBREVIATIONS

VIF = VERIFY IN FIELD	CLR = CLEAR
SAD = SEE ARCHITECTURAL DRAWINGS	HL = HOUSE LEFT
SSD = SEE STRUCTURAL DRAWINGS	HR = HOUSE RIGHT
SMD = SEE MECHANICAL DRAWINGS	SR = STAGE RIGHT
SED = SEE ELECTRICAL DRAWINGS	SL = STAGE LEFT
AFF = ABOVE FINISHED FLOOR	SIM. = SIMILAR
NIC = NOT IN CONTRACT	OPP. = OPPOSITE
HT = HEIGHT	NTS = NOT TO SCALE
TYP = TYPICAL	MIN = MINIMUM
RWL = RECOMMENDED WORKING LOAD	MAX = MAXIMUM

QUATTROCCHI KWOK ARCHITECTS
Main Office:
636 Fifth Street, Santa Rosa, CA 95404
Pleasanton Office:
600 Main Street, Suite E,
Pleasanton, CA 94566
(707) 576-0829

LICENSED ARCHITECT
JIM THEISS
LICENSE # C22643
EXP JUNE 30, 2019
STATE OF CALIFORNIA

SIGNED: DECEMBER 14, 2018

The Shalleck Collaborative Inc.
Planning and Design of Theatres | Production Systems | AV
1533 Martin Luther King Jr Way
Berkeley, CA 94709
tel 415-956-0200
www.shalleck.com

FREEDOM HIGH SCHOOL

PERFORMING ARTS AND CTE FACILITIES

1050 NEROLY RD
OAKLEY, CA 94561

LIBERTY UNION HIGH SCHOOL DISTRICT

ARCH PROJECT NO:	1739.00
DRAWN BY:	
DRAWING SCALE:	
PTN:	61721-0068

BID SET

AUGUST 13, 2019

SHEET TITLE

PRODUCTION SEATING CL SECTION & DTLS

SHEET NUMBER

PS-3.01

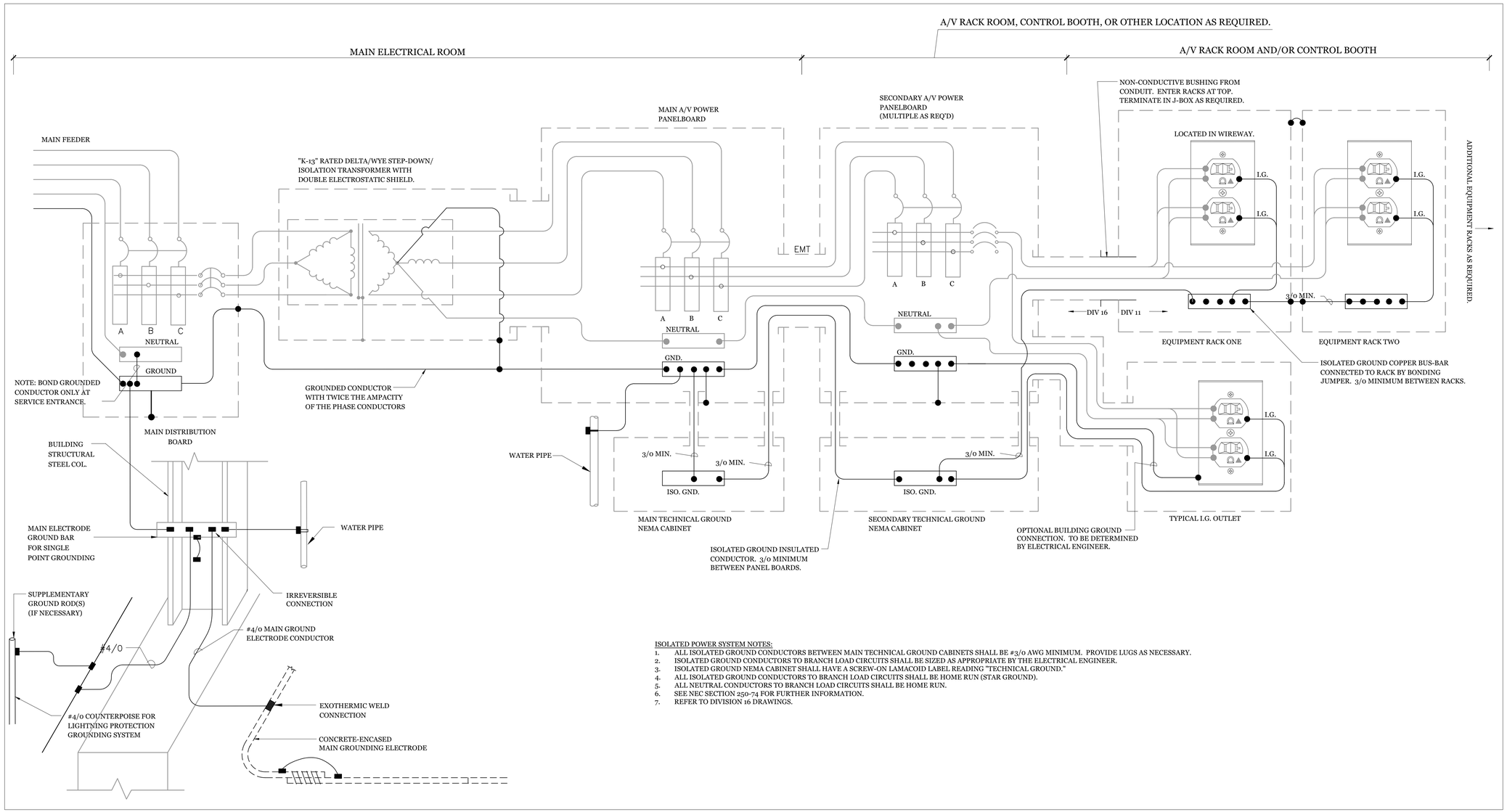

ISOLATED POWER SYSTEM NOTES:

1. ALL ISOLATED GROUND CONDUCTORS BETWEEN MAIN TECHNICAL GROUND CABINETS SHALL BE #3/0 AWG MINIMUM. PROVIDE LUGS AS NECESSARY.
2. ISOLATED GROUND CONDUCTORS TO BRANCH LOAD CIRCUITS SHALL BE SIZED AS APPROPRIATE BY THE ELECTRICAL ENGINEER.
3. ISOLATED GROUND NEMA CABINET SHALL HAVE A SCREW-ON LAMACOID LABEL READING "TECHNICAL GROUND."
4. ALL ISOLATED GROUND CONDUCTORS TO BRANCH LOAD CIRCUITS SHALL BE HOME RUN (STAR GROUND).
5. ALL NEUTRAL CONDUCTORS TO BRANCH LOAD CIRCUITS SHALL BE HOME RUN.
6. SEE NEC SECTION 250-74 FOR FURTHER INFORMATION.
7. REFER TO DIVISION 16 DRAWINGS.

1 TYPICAL ISOLATED GROUND POWER SYSTEM
NTS

CONDUIT SEPARATION TABLE -AV CONDUITS-

	A	B	C	D	E
A	--	12"	12"	12"	12"
B	12"	--	6"	6"	6"
C	12"	6"	--	6"	6"
D	12"	6"	6"	--	6"
E	12"	6"	6"	6"	--

CONDUIT SEPARATION TABLE -ELECTRICAL-

	AV CONDUIT
AC BRANCH LOAD	36"
AC- FEEDER	48"
AC-DIMMED LOAD	36"
TEL/DATA	12"
CONTROL (OTHER)	12"

CONDUIT SEPARATION NOTES

1. THE AV SPECIFIC CONDUIT SEPARATION TABLE ABOVE REFLECTS BEST-CASE SCENARIOS, AND SHOULD BE ADHERED TO WHEN POSSIBLE.
2. ABSOLUTE MINIMUM SEPARATION FOR AV CONDUIT IS 4", IF ABOVE DISTANCES ARE NOT ACHIEVABLE.
3. ABSOLUTE MINIMUM SEPARATION BETWEEN AV AND ELECTRICAL POWER CONDUITS IS 36"

EXCEPTIONS

1. SHOULD ELECTRICAL CONDUIT NEED TO CROSS AV CONDUIT, DO SO AT 90-DEGREES.
2. IF AV CONDUIT MINIMUM SEPARATION CANNOT BE MET (SUCH AS WHEN GOING THROUGH A NARROW CAVITY), CONDUIT MAY RUN IMMEDIATELY ADJACENT FOR NO MORE THAN 3'-0" IN ANY 50'-0" SPAN.

2 CONDUIT SEPARATION TABLES
NTS

ASSISTIVE LISTENING

	# SEATS	# RECEIVERS / # HEARING AID	TYPE
MAIN THEATRE	300	12 / 3	FM

219.3 Receivers for Assistive Listening Systems
-Department of Justice's ADA Standards for Accessible Design (2010)-

Capacity of Seating in Assembly Area	Minimum Number of Required Receivers	Minimum Number of Required Receivers Required to be Hearing-aid Compatible
50 or less	2	2
51 to 200	2, plus 1 per 25 seats over 50 seats [1]	2
201 to 500	2, plus 1 per 25 seats over 50 seats [1]	1 per 4 receivers [1]
501 to 1000	20, plus 1 per 33 seats over 500 seats [1]	1 per 4 receivers [1]
1001 to 2000	35, plus 1 per 50 seats over 1000 seats [1]	1 per 4 receivers [1]
2001 and over	55 plus 1 per 100 seats over 2000 seats [1]	1 per 4 receivers [1]
1. Or fraction thereof.		

ASSISTIVE LISTENING CODE REFERENCES

1. 219.2 Required Systems. In each assembly area where audible communication is integral to the use of the space, an assistive listening system shall be provided. EXCEPTION: Other than in courtrooms, assistive listening systems shall not be required where audio amplification is not provided.
2. 219.3 Receivers. Receivers complying with 706.2 shall be provided for assistive listening systems in each assembly area in accordance with Table 219.3. Twenty-five percent minimum of receivers provided, but no fewer than two, shall be hearing-aid compatible in accordance with 706.3. EXCEPTIONS: 1. Where a building contains more than one assembly area and the assembly areas required to provide assistive listening systems are under one management, the total number of required receivers shall be permitted to be calculated according to the total number of seats in the assembly areas in the building provided that all receivers are usable with all systems. 2. Where all seats in an assembly area are served by an induction loop assistive listening system, the minimum number of receivers required by Table 219.3 to be hearing-aid compatible shall not be required to be provided.
3. Advisory 706.1 General. Assistive listening systems are generally categorized by their mode of transmission. There are hard-wired systems and three types of wireless systems: induction loop, infrared, and FM radio transmission. Each has different advantages and disadvantages that can help determine which system is best for a given application. For example, an FM system may be better than an infrared system in some open-air assemblies since infrared signals are less effective in sunlight. On the other hand, an infrared system is typically a better choice than an FM system where confidential transmission is important because it will be contained within a given space.
4. 703.7.2.4 Assistive Listening Systems. Assistive listening systems shall be identified by the International Symbol of Access for Hearing Loss complying with Figure 703.7.2.4. (signage by architect).

3 ASSISTIVE LISTENING CALCULATIONS & REFERENCES
NTS

QUATTROCCHI KWOK ARCHITECTS
Main Office:
636 Fifth Street, Santa Rosa, CA 95404
Pleasanton Office:
600 Main Street, Suite E,
Pleasanton, CA 94566
(707) 576-0829

LICENSED ARCHITECT
JIM THEISS
LICENSE # C22643
EXP JUNE 30, 2019
STATE OF CALIFORNIA

SIGNED: DECEMBER 14, 2018

The Shalleck Collaborative Inc.
Planning and Design of Theatres | Production Systems | AV
1533 Martin Luther King Jr Way
Berkeley, CA 94709
tel 415-956-0200
www.shalleck.com

FREEDOM HIGH SCHOOL

PERFORMING ARTS AND CTE FACILITIES

1050 NEROLY RD
OAKLEY, CA 94561

LIBERTY UNION HIGH SCHOOL DISTRICT

ARCH PROJECT NO: 1739.00
DRAWN BY:
DRAWING SCALE:
PTN: 61721-0068

BID SET

AUGUST 13, 2019

SHEET TITLE

AV ISOLATED GROUND, CONDUIT, & ALS INFO

SHEET NUMBER

AV-0.01

Wiretype Schedule

Notes:
1- Wiretypes shown below are current to our best knowledge.
2- Manufacturer substitutions are allowed, with approval from consultant.
3- All conduit, backboxes and junction boxes by electrical contractor.

TYPE	DESCRIPTION	MFR	MODEL	O.D.	AREA	NOTES
GROUP A- MIC LEVEL						
A1	Microphone Level Audio 22 AWG, 7x30 stranding, Foil shield	Belden	9451	0.135	0.0143	
A2	Microphone Level Audio, Thicker shield 22 AWG, 7x30 stranding, Foil shield	Belden	8761	0.175	0.0241	
GROUP B- LINE LEVEL						
B1	Line Level Audio 22 AWG, 7x30 stranding, Foil shield	Belden	9451	0.135	0.0143	
B2	Digital Audio - AES/EBU, 110-ohm 22 AWG, 7x30 stranding, Foil shield	Belden	1696A	0.235	0.0430	
B3	Line Audio + DC Power 1-PR 22 AWG, 7x30 stranding, Foil shield 1-PR 18 AWG, 16x30 stranding, Foil shield	Belden	1502R	0.250	0.0491	
GROUP C- VIDEO AND RF LEVEL						
C1	Party-Line Intercom, 1ch 20 AWG, 7x28 stranding, Foil shield	Belden	8762	0.204	0.0327	*Runs under 500'*
C1B	Party-Line Intercom, 1ch 18 AWG, 16x30 stranding, Foil shield	Belden	8760	0.222	0.0387	*Runs over 500'*
C1C	Digital Intercom, 1ch 20 AWG, 7x28 stranding, Foil shield	Belden	9207	0.330	0.0855	*HELIX-NET SINGLE CHANNEL*
C2	Party-Line Intercom, 2 ch 22 AWG, 7x30 stranding, Foil shield, 2 pair	Belden	1814R	0.330	0.0855	
C3	Party-Line Intercom, 4 ch 22 AWG, 7x30 stranding, Foil shield, 4 pair	Belden	1815R	0.384	0.1158	
C3B	Digital Intercom, Multi-ch 24 AWG, Solid, Foil shield, 4 pair, Cat5e, F/UTP	Belden	1533P	0.235	0.0433	*HELIX-NET MULTI-CHANNEL*
C4	Ethernet Data, Cat 6A, Individually shielded, S/FTP 24 AWG, Solid, Bonded Pairs	Belden	1302e	0.301	0.0314	
C5	Ethernet Data, Cat 6A, Single Foil Shield, F/UTP 23 AWG, Solid, Bonded Pairs	Belden	10GX62F	0.300	0.0707	
C6	Crestron/AMX Control 22 AWG, 7x30 stranded, foil shield, (data) 18 AWG, 16x30 stranded, (power)	Liberty	Axlink	0.246	0.0475	
C7	DC Control, 2 cond 18 AWG, 16x30 stranded, twisted pair	Belden	9740	0.210	0.0346	
C8	DC Control, 4 cond 18 AWG, 16x30 stranded, twisted pair	Belden	9156	0.333	0.0871	
C9	CATV Video 18 AWG, Solid conductor, braid shield, RG-6 type	Belden	9116	0.270	0.0573	
C10	Production Video 20 AWG, Solid conductor, braid shield, RG-59 type	Belden	1505A	0.233	0.0430	*Runs under 500'*
C10B	Production Video 18 AWG, Solid conductor, braid shield	Belden	1694A	0.274	0.0594	*Runs over 500'*
C10C	Production Video 16 AWG, Solid conductor, braid shield	Belden	4794R	0.320	0.0594	
C11	RGBHV Video 20 AWG, Solid conductor, braid shield, 5 cond	Belden	7796A	0.790	0.4902	*Runs under 50'*
C11B	RGBHV Video 18 AWG, Solid conductor, braid shield, 5 cond	Belden	7712A	0.970	0.6969	*Runs over 50'*
C12	Wireless Microphone Antenna 10 AWG, Solid conductor, braid shield, RG-8/U, 50Ω	Belden	9913	0.405	0.1288	
C13	FM Assisted Listening 10 AWG, Solid conductor, braid shield, RG-8/U, 50Ω	Belden	9913	0.405	0.1288	
C14	Infrared Emitter 19 AWG, Solid conductor, braid shield	Belden	7806A	0.195	0.0299	*Runs under 100'*
C15	Extron XTP/DTP Cable (1) Shielded 4-twisted-pair	Extron	XTP DTP 24	0.276	0.0598	
C16	Mini Hi-Res RGBHV Cable 26 AWG, 7x34 Stranded, foil shield	Liberty	RGB6C-PVC-YEL	0.350	0.1164	
C17	CAT6 Shielded Twisted Pair (STP) for DVI/RGBHV 23AWG, Solid, Non-bonded Pairs, foil shield w/ 24 AWG solid drain wire	Belden	1351A	0.290	0.0552	
C18	CATV Video Trunk 14 AWG, Solid conductor, quad braid shield	Belden	1617A	0.407	0.1301	
C19	Digital Media Cable, 8G (1) Shielded 4-twisted-pair	Crestron	DM-CBL-8G-NP	0.244	0.0394	*Use DM-8G-CONN connector*

1 AV WIRETYPE SCHEDULE
NTS

Wiretype Schedule

Notes:
1- Wiretypes shown below are current to our best knowledge.
2- Manufacturer substitutions are allowed, with approval from consultant.
3- All conduit, backboxes and junction boxes by electrical contractor.

TYPE	DESCRIPTION	MFR	MODEL	O.D.	AREA	NOTES
GROUP D- LOUDSPEAKER LEVEL						
D1	Loudspeaker Level, 2 cond 12 AWG, Stranded	Belden	5000UP	0.302	0.0716	
D2	Loudspeaker Level, 4 cond 12 AWG, Stranded	Belden	5002UP	0.357	0.1001	
D3	Loudspeaker Level, 70V, 2 cond 18 AWG, 7x26 Straded	West Penn	224	0.155	0.0189	
D4	Loudspeaker Level, 70V, 3 cond 18 AWG, 7x26 Straded	West Penn	234	0.174	0.0238	
GROUP E- EMPTY CONDUIT						
	No wiretypes. For future expansion.					
GROUP F- FIBER OPTIC						
F1	NOT USED	NA	NA	NA	NA	
F2	NOT USED	NA	NA	NA	NA	
F3	Single-Mode Fiber, 2-strand 1310 µm, OS2, OFNR	Belden	I1W0255	0.430	0.150	
F4	Crestron Crestfiber 8G Multimode fiber, OFNP, 4-strand, 50/125 µm	Crestron	Cresfiber8G-NP	0.313	0.0769	
F5	Multi-Mode Fiber, 2-strand, OM3 50/125 µm, duplex, OFNR	Belden	I1C0255	0.430	0.150	
F6	850nm Multi-Mode Fiber, 2-strand, OM4 50 µm, duplex, OFNP	Extron	OM4 MM P	0.160	0.0201	

PRODUCTION SYSTEMS SCOPE MATRIX

SCOPE	RESPONSIBILITY	
	EC	AV
POWER SYSTEMS (COMPLETE)	X	
COMPANY SWITCHES	X	
CONDUIT FOR AV SYSTEM	X	
WIRE & PULL FOR AV SYSTEMS (LOW-VOLT ONLY)		X
WIRE TERMINATION FOR AV SYSTEMS		X
EQUIPMENT RACKS FOR AV		X
AV EQUIPMENT & INSTALLATION		X
AV TESTING, TUNING, CONFIGURATION		X

2 AV PRODUCTION SYSTEMS SCOPE MATRIX
NTS

QUATTROCCHI KWOK ARCHITECTS
Main Office:
636 Fifth Street, Santa Rosa, CA 95404
Pleasanton Office:
600 Main Street, Suite E,
Pleasanton, CA 94566
(707) 576-0829

LICENSED ARCHITECT
JIM THEISS
LICENSE # C22643
EXP JUNE 30, 2019
STATE OF CALIFORNIA

SIGNED: DECEMBER 14, 2018

The Shalleck Collaborative Inc.
Planning and Design of Theatres | Production Systems | AV
1533 Martin Luther King Jr Way
Berkeley, CA 94709
tel 415-956-0200
www.shalleck.com

FREEDOM HIGH SCHOOL

PERFORMING ARTS AND CTE FACILITIES

1050 NEROLY RD
OAKLEY, CA 94561

LIBERTY UNION HIGH SCHOOL DISTRICT

ARCH PROJECT NO: 1739.00
DRAWN BY:
DRAWING SCALE:
PTN: 61721-0068

BID SET

AUGUST 13, 2019

SHEET TITLE

AV WIRETYPE SCHEDULE

SHEET NUMBER

AV-0.02

AV PANEL SCHEDULE

DEVICE TYPE	LOCATION	DESCRIPTION	PANEL SIZE-FLUSH MOUNT	PANEL SIZE-SURFACE MOUNT	BOX TYPE-FLUSH MOUNT	BOX TYPE-SURFACE MOUNT	WIRING CONNECTION
AV-A1 -- AV-A2 -- AV-A6 -- AV-A12 -- AV-A13 --	THEATRE	MULTI-PANEL	13X13	12X12	NEMA TYPE 1 12X12X6	NEMA TYPE 1 12X12X6	HOME RUN TO AV RACK
AV-A7 -- AV-A8 -- AV-A10 -- AV-A11 -- AV-A14 -- AV-A15 -- AV-A16 -- AV-A17 -- AV-A18 -- AV-A21 --	THEATRE	MULTI-PANEL	9X11	8X10	NEMA TYPE 1 8X10X6	NEMA TYPE 1 8X10X6	HOME RUN TO AV RACK
AV-A19 -- AV-A20 -- AV-A22 -- AV-A23 -- AV-A24 --	THEATRE	MULTI-PANEL	4-GANG	4-GANG	4-GANG DOUBLE-DEPTH BOX	DOUBLE-DEPTH 4-GANG BELL WEATHERPROOF BOX	HOME RUN TO AV RACK
AV-A3 -- AV-A4 -- AV-A5 --	THEATRE	FLOOR POCKET	2X: 1-GANG 1X: 3-GANG 1X: 6-GANG	N/A	FSR, Inc. MODEL: FL-640p POURPAN: FL-GRD4 13.5X12X6	N/A	HOME RUN TO AV RACK
AV-A9 --	THEATRE	FLOOR POCKET	2X: 1-GANG 1X: 3-GANG 1X: 6-GANG	N/A	FSR, Inc. MODEL: FL-600P-6 POURPAN: FL-GRD2/4	N/A	HOME RUN TO AV RACK
AV-CLS --	CLASSROOMS	CLASSROOM INPUT	2-GANG	2-GANG	2-GANG DOUBLE-DEPTH BOX	DOUBLE-DEPTH 2-GANG BELL WEATHERPROOF BOX	SEE DRAWINGS
LS-1 -- LS-1A --	SEE DRAWINGS	LOUDSPEAKER CONNECTION	1-GANG	1-GANG	2-GANG DOUBLE-DEPTH BOX W/ 1-GANG REDUCER	DOUBLE-DEPTH 1-GANG BELL WEATHERPROOF BOX	HOME RUN TO AV RACK
LS-ARY --	THEATRE	LOUDSPEAKER CONNECTION	7X7	6X6	NEMA TYPE 1 6X6X6	NEMA TYPE 1 6X6X6	HOME RUN TO AV RACK
SC --	SEE DRAWINGS	CEILING MOUNT 70V LOUDSPEAKER	N/A DIRECT CONNECT	N/A DIRECT CONNECT	1-GANG W/ FLEX CONDUIT TO LOUDSPEAKER	N/A	FROM AV RACK - CONTINUES TO OTHER SIMILAR DEVICES IN AREA
SHC --	SEE DRAWINGS	HIGH CEILING MOUNT 70V LOUDSPEAKER	N/A DIRECT CONNECT	N/A DIRECT CONNECT	1-GANG W/ FLEX CONDUIT TO LOUDSPEAKER	N/A	FROM AV RACK - CONTINUES TO OTHER SIMILAR DEVICES IN AREA
SHP --	SEE DRAWINGS	PENDANT CEILING MOUNT 70V LOUDSPEAKER	N/A DIRECT CONNECT	N/A DIRECT CONNECT	1-GANG W/ FLEX CONDUIT TO LOUDSPEAKER	N/A	FROM AV RACK - CONTINUES TO OTHER SIMILAR DEVICES IN AREA
SA --	CONTROL BOOTH	70V VOLUME CONTROL	1-GANG	1-GANG	2-GANG DOUBLE-DEPTH BOX W/ 1-GANG REDUCER	DOUBLE-DEPTH 1-GANG BELL WEATHERPROOF BOX	HOME RUN TO AV RACK
SAK --	SEE DRAWINGS	70V VOLUME CONTROL W/ KEY SWITCH	3-GANG	3-GANG	3-GANG DOUBLE-DEPTH BOX	DOUBLE-DEPTH 3-GANG BELL WEATHERPROOF BOX	HOME RUN TO AV RACK

AV PANEL SCHEDULE

DEVICE TYPE	LOCATION	DESCRIPTION	PANEL SIZE-FLUSH MOUNT	PANEL SIZE-SURFACE MOUNT	BOX TYPE-FLUSH MOUNT	BOX TYPE-SURFACE MOUNT	WIRING CONNECTION
HM --	LOBBY	HOUSE MANAGER PANEL	16X16 W/ STANDOFFS	16X16 W/ STANDOFFS	NEMA TYPE 1 18X18X8 + HOFFMAN AFDF1818P DOOR	NEMA TYPE 1 18X18X8 + HOFFMAN AFDF1818P DOOR	HOME RUN TO AV RACK
CM-2 --	SEE DRAWINGS	PRODUCTION INTERCOM	1-GANG	1-GANG	2-GANG DOUBLE-DEPTH BOX W/ 1-GANG REDUCER	DOUBLE-DEPTH 1-GANG BELL WEATHERPROOF BOX	FROM AV RACK - CONTINUES TO OTHER SIMILAR DEVICES IN AREA
CM-W --	HALLWAY	PRODUCTION INTERCOM WALL BOX	PRE-MADE DEVICE	PRE-MADE DEVICE	2-GANG DOUBLE-DEPTH BOX	DOUBLE-DEPTH 2-GANG BELL WEATHERPROOF BOX	HOME RUN TO AV RACK
MC-1 --	SEE DRAWINGS	MICROPHONE INPUT	1-GANG	1-GANG	2-GANG DOUBLE-DEPTH BOX W/ 1-GANG REDUCER	DOUBLE-DEPTH 1-GANG BELL WEATHERPROOF BOX	HOME RUN TO AV RACK
WX --	THEATRE	WIRELESS MIC ANTENNA	1-GANG	1-GANG	2-GANG DOUBLE-DEPTH BOX W/ 1-GANG REDUCER	DOUBLE-DEPTH 1-GANG BELL WEATHERPROOF BOX	HOME RUN TO AV RACK
FM --	THEATRE	FM TRANSMITTER	1-GANG	1-GANG	2-GANG DOUBLE-DEPTH BOX W/ 1-GANG REDUCER	DOUBLE-DEPTH 1-GANG BELL WEATHERPROOF BOX	HOME RUN TO AV RACK
V-2 --	THEATRE	VIDEO I/O	1-GANG	1-GANG	2-GANG DOUBLE-DEPTH BOX W/ 1-GANG REDUCER	DOUBLE-DEPTH 1-GANG BELL WEATHERPROOF BOX	HOME RUN TO AV RACK
VPJ --	SEE DRAWINGS	VIDEO PROJECTOR	N/A DIRECT CONNECT	N/A DIRECT CONNECT	NEMA TYPE 1 6X6X6	NEMA TYPE 1 6X6X6	HOME RUN TO AV RACK
VPJ-W --	SEE DRAWINGS	SHORT-THROW VIDEO PROJECTOR	N/A DIRECT CONNECT	N/A DIRECT CONNECT	3-GANG DOUBLE-DEPTH BOX	DOUBLE-DEPTH 3-GANG BELL WEATHERPROOF BOX	TO LOCAL DEVICES
SCRC --	SEE DRAWINGS	CEILING MOUNT 70V LOUDSPEAKER	N/A DIRECT CONNECT	N/A DIRECT CONNECT	1-GANG W/ FLEX CONDUIT TO LOUDSPEAKER	N/A	FROM AV RACK - CONTINUES TO OTHER SIMILAR DEVICES IN AREA
VTV --	SEE DRAWINGS	CATV OUTLET	1-GANG	1-GANG	2-GANG DOUBLE-DEPTH BOX W/ 1-GANG REDUCER	DOUBLE-DEPTH 1-GANG BELL WEATHERPROOF BOX	FROM AV RACK - CONTINUES TO OTHER SIMILAR DEVICES IN AREA
FPD-T --	SEE DRAWINGS	FLAT PANEL DISPLAY	N/A DIRECT CONNECT	N/A	CHIEF MFG MODEL PAC-526-FCW	N/A	HOME RUN TO AV RACK
CSP-1 --	SEE DRAWINGS	REMOTE CONTROL PANEL	PRE-MADE DEVICE	PRE-MADE DEVICE	2-GANG DOUBLE-DEPTH BOX	DOUBLE-DEPTH 2-GANG BELL WEATHERPROOF BOX	HOME RUN TO DISPLAY
RK-1 -- RK-2 -- RK-3 --	SEE DRAWINGS	J-BOX	N/A	N/A	NEMA TYPE 1 12X12X6	NEMA TYPE 1 12X12X6	HOME RUN TO AV RACK

1 AV DEVICE SCHEDULE
NTS

QUATTROCCHI KWOK ARCHITECTS
Main Office:
636 Fifth Street, Santa Rosa, CA 95404
Pleasanton Office:
600 Main Street, Suite E,
Pleasanton, CA 94566
(707) 576-0829

LICENSED ARCHITECT
JIM THEISS
LICENSE # C22643
EXP JUNE 30, 2019
STATE OF CALIFORNIA

SIGNED: DECEMBER 14, 2018

The Shalleck Collaborative Inc.
Planning and Design of Theatres | Production Systems | AV
1533 Martin Luther King Jr Way
Berkeley, CA 94709
tel 415-956-1000
www.shalleck.com

FREEDOM HIGH SCHOOL

PERFORMING ARTS AND CTE FACILITIES

1050 NEROLY RD
OAKLEY, CA 94561

LIBERTY UNION HIGH SCHOOL DISTRICT

ARCH PROJECT NO: 1739.00
DRAWN BY:
DRAWING SCALE:
PTN: 61721-0068

BID SET

AUGUST 13, 2019

SHEET TITLE

AV DEVICE SCHEDULE

SHEET NUMBER

AV-0.03

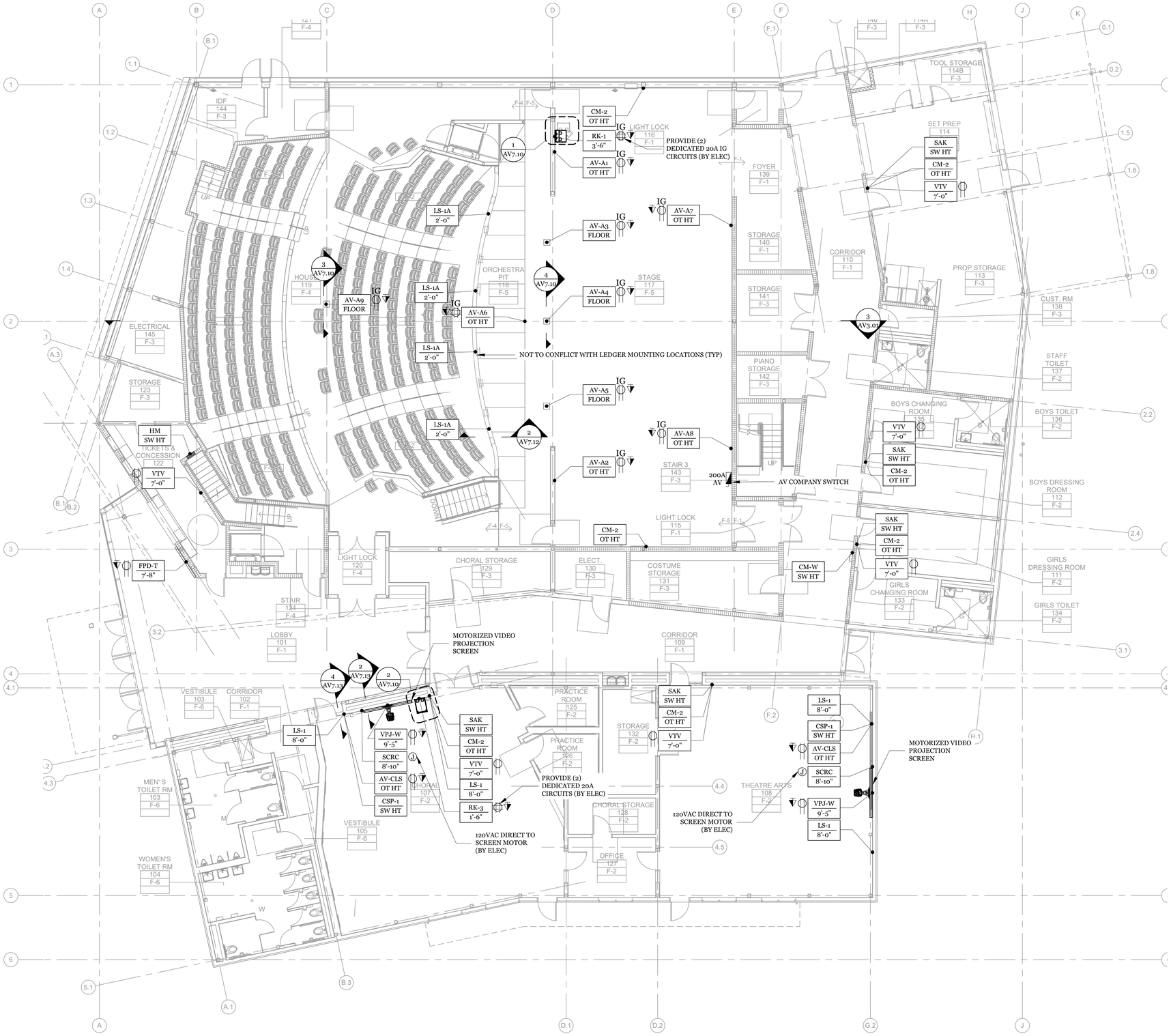

1 AV DEVICE PLAN AT LEVEL 1
1/8"=1'-0"

AV SYMBOL KEY

DEVICE LOCATION
AV PANEL TYPE
XXX
X'-X"
MOUNTING CONDITION OR HEIGHT ABOVE IMMEDIATE FINISHED FLOOR BELOW TO CENTER OF BACKBOX

OT HT: PROJECT STANDARD OUTLET HEIGHT
SW HT: PROJECT STANDARD SWITCH HEIGHT
CLNG: MOUNTED TO CEILING
RAIL: MOUNTED TO RAILING OR PIPE
GRID: MOUNTED TO TENSION GRID

AUDIO
- AV-XX: CUSTOM AV PANEL & LOCATION
- MC-#: MICROPHONE CONNECTION & JACK QUANTITY
- WX: WIRELESS MICROPHONE ANTENNA
- FM: ASSISTIVE LISTENING ANTENNA

VIDEO
- V-#: VIDEO I/O & JACK QUANTITY
- VPJ: VIDEO PROJECTOR
- VPJ-W: SHORT THROW WALL MOUNT PROJECTOR
- VTV: CATV OUTLET
- FPD-T: FLAT PANEL DISPLAY W/ TILT MOUNT

LOUDSPEAKER
- LS-#: LOUDSPEAKER & JACK QUANTITY
- SC: CEILING MOUNT 70V LOUDSPEAKER
- SHC: HIGH CEILING MOUNT 70V LOUDSPEAKER
- SHP: PENDANT MOUNT 70V LOUDSPEAKER
- SA: 70V VOLUME CONTROL
- SAK: 70V VOLUME CONTROL W/ KEY TOGGLE

OTHER
- RK-#: EQUIPMENT RACK JUNCTION BOX & LOCATION
- SCRC: MOTORIZED SCREEN CONTROL
- CSP-#: CONTROL PANEL & TYPE
- HM: HOUSE MANAGER PANEL
- CM-#: PRODUCTION INTERCOM & JACK QUANTITY
- CM-W: PRODUCTION INTERCOM WALL STATION

LOOSE CONNECTION TO PANEL
A/V EQUIPMENT TYPE
XXX
XXX
MOUNTING CONDITION

AUDIO
- MIC: MICROPHONE

VIDEO
- VCAM: VIDEO CAMERA
- VPJ: VIDEO PROJECTOR
- FPD: FLAT PANEL DISPLAY

LOUDSPEAKER
- LS: LOUDSPEAKER
- SUB: SUBWOOFER

ELECTRICAL

- IG DUPLEX OUTLET, 120V / 20A (BY ELEC)
- IG QUAD OUTLET, 120V / DUAL 20A (BY ELEC)
- QUAD OUTLET, 120V / DUAL 20A (BY ELEC)
- DUPLEX OUTLET, 120V / 20A (BY ELEC)
- TEL/DATA OUTLET (BY ELEC)
- JUNCTION BOX (SEE DESCRIPTION) (BY ELEC)
- CATV OUTLET (SEE AV DRAWINGS)
- ISOLATED GROUND CONNECTION (BY ELEC)
- SPECIALTY OUTLET (SEE DESCRIPTION) (BY ELEC)
- COMPANY SWITCH (SEE DESCRIPTION) (BY ELEC)

GENERAL NOTES

1. ALL AC OUTLETS, CONDUIT & BACKBOXES BY ELEC.
2. REQUIRED STRUCTURAL BACKING BY ARCH.
3. AV CONTRACTOR TO COORDINATE WITH ELEC TO DETERMINE EXACT LOCATION OF AV BACKBOXES.

QUATTROCCHI KWOK ARCHITECTS
Main Office:
636 Fifth Street, Santa Rosa, CA 95404
Pleasanton Office:
600 Main Street, Suite E,
Pleasanton, CA 94566
(707) 576-0829

LICENSED ARCHITECT
JIM THEISS
LICENSE # C22643
EXP JUNE 30, 2019
STATE OF CALIFORNIA

SIGNED: DECEMBER 14, 2018

The Shalleck Collaborative Inc.
Planning and Design of Theatres | Production Systems | AV
1533 Martin Luther King Jr Way
Berkeley, CA 94709
tel 415-956-0200
www.shalleck.com

FREEDOM HIGH SCHOOL

PERFORMING ARTS AND CTE FACILITIES

1050 NEROLY RD
OAKLEY, CA 94561

LIBERTY UNION HIGH SCHOOL DISTRICT

ARCH PROJECT NO: 1739.00
DRAWN BY:
DRAWING SCALE:
PTN: 61721-0068

BID SET

AUGUST 13, 2019

SHEET TITLE

AV DEVICE PLAN AT LEVEL 1

SHEET NUMBER

AV-1.01

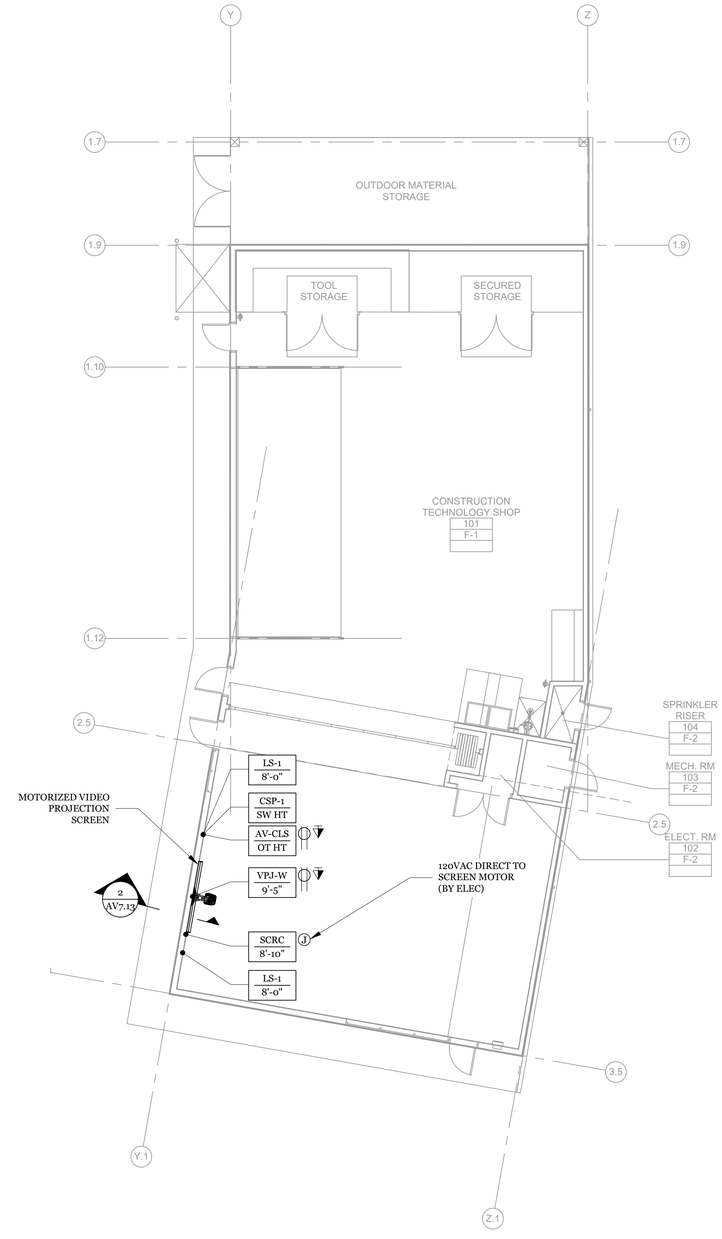

1 AV DEVICE PLAN AT LEVEL 1 - BUILDING B
1/8"=1'-0"

AV SYMBOL KEY

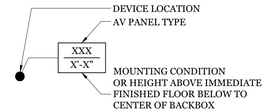

OT HT: PROJECT STANDARD OUTLET HEIGHT
SW HT: PROJECT STANDARD SWITCH HEIGHT
CLNG: MOUNTED TO CEILING
RAIL: MOUNTED TO RAILING OR PIPE
GRID: MOUNTED TO TENSION GRID

AUDIO
- AV-XX: CUSTOM AV PANEL & LOCATION
- MC-#: MICROPHONE CONNECTION & JACK QUANTITY
- WX: WIRELESS MICROPHONE ANTENNA
- FM: ASSISTIVE LISTENING ANTENNA

VIDEO
- V-#: VIDEO I/O & JACK QUANTITY
- VPJ: VIDEO PROJECTOR
- VPJ-W: SHORT THROW WALL MOUNT PROJECTOR
- VTV: CATV OUTLET
- FPD-T: FLAT PANEL DISPLAY W/ TILT MOUNT

LOUDSPEAKER
- LS-#: LOUDSPEAKER & JACK QUANTITY
- SC: CEILING MOUNT 70V LOUDSPEAKER
- SHC: HIGH CEILING MOUNT 70V LOUDSPEAKER
- SHP: PENDANT MOUNT 70V LOUDSPEAKER
- SA: 70V VOLUME CONTROL
- SAK: 70V VOLUME CONTROL W/ KEY TOGGLE

OTHER
- RK-#: EQUIPMENT RACK JUNCTION BOX & LOCATION
- SCRC: MOTORIZED SCREEN CONTROL
- CSP-#: CONTROL PANEL & TYPE
- HM: HOUSE MANAGER PANEL
- CM-#: PRODUCTION INTERCOM & JACK QUANTITY
- CM-W: PRODUCTION INTERCOM WALL STATION

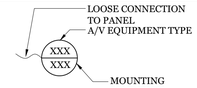

AUDIO
- MIC: MICROPHONE

VIDEO
- VCAM: VIDEO CAMERA
- VPJ: VIDEO PROJECTOR
- FPD: FLAT PANEL DISPLAY

LOUDSPEAKER
- LS: LOUDSPEAKER
- SUB: SUBWOOFER

ELECTRICAL

IG — IG DUPLEX OUTLET, 120V / 20A (BY ELEC)

IG — IG QUAD OUTLET, 120V / DUAL 20A (BY ELEC)

QUAD OUTLET, 120V / DUAL 20A (BY ELEC)

DUPLEX OUTLET, 120V / 20A (BY ELEC)

TEL/DATA OUTLET (BY ELEC)

J — JUNCTION BOX (SEE DESCRIPTION) (BY ELEC)

TV — CATV OUTLET (SEE AV DRAWINGS)

IG — ISOLATED GROUND CONNECTION (BY ELEC)

SPECIALTY OUTLET (SEE DESCRIPTION) (BY ELEC)

COMPANY SWITCH (SEE DESCRIPTION) (BY ELEC)

GENERAL NOTES

1. ALL AC OUTLETS, CONDUIT & BACKBOXES BY ELEC.
2. REQUIRED STRUCTURAL BACKING BY ARCH.
3. AV CONTRACTOR TO COORDINATE WITH ELEC TO DETERMINE EXACT LOCATION OF AV BACKBOXES.

QUATTROCCHI KWOK ARCHITECTS
Main Office:
636 Fifth Street, Santa Rosa, CA 95404
Pleasanton Office:
600 Main Street, Suite E,
Pleasanton, CA 94566
(707) 576-0829

LICENSED ARCHITECT
JIM THEISS
LICENSE # C22643
EXP JUNE 30, 2019
STATE OF CALIFORNIA

SIGNED: DECEMBER 14, 2018

The Shalleck Collaborative Inc.
Planning and Design of Theatres | Production Systems | AV
1253 Martin Luther King Jr Way
Berkeley, CA 94709
tel 415.658.4200
www.shalleck.com

FREEDOM HIGH SCHOOL

PERFORMING ARTS AND CTE FACILITIES

1050 NEROLY RD
OAKLEY, CA 94561

LIBERTY UNION HIGH SCHOOL DISTRICT

ARCH PROJECT NO: 1739.00
DRAWN BY:
DRAWING SCALE:
PTN: 61721-0068

BID SET

AUGUST 13, 2019

SHEET TITLE

AV DEVICE PLAN AT LEVEL 1

AV-1.01b

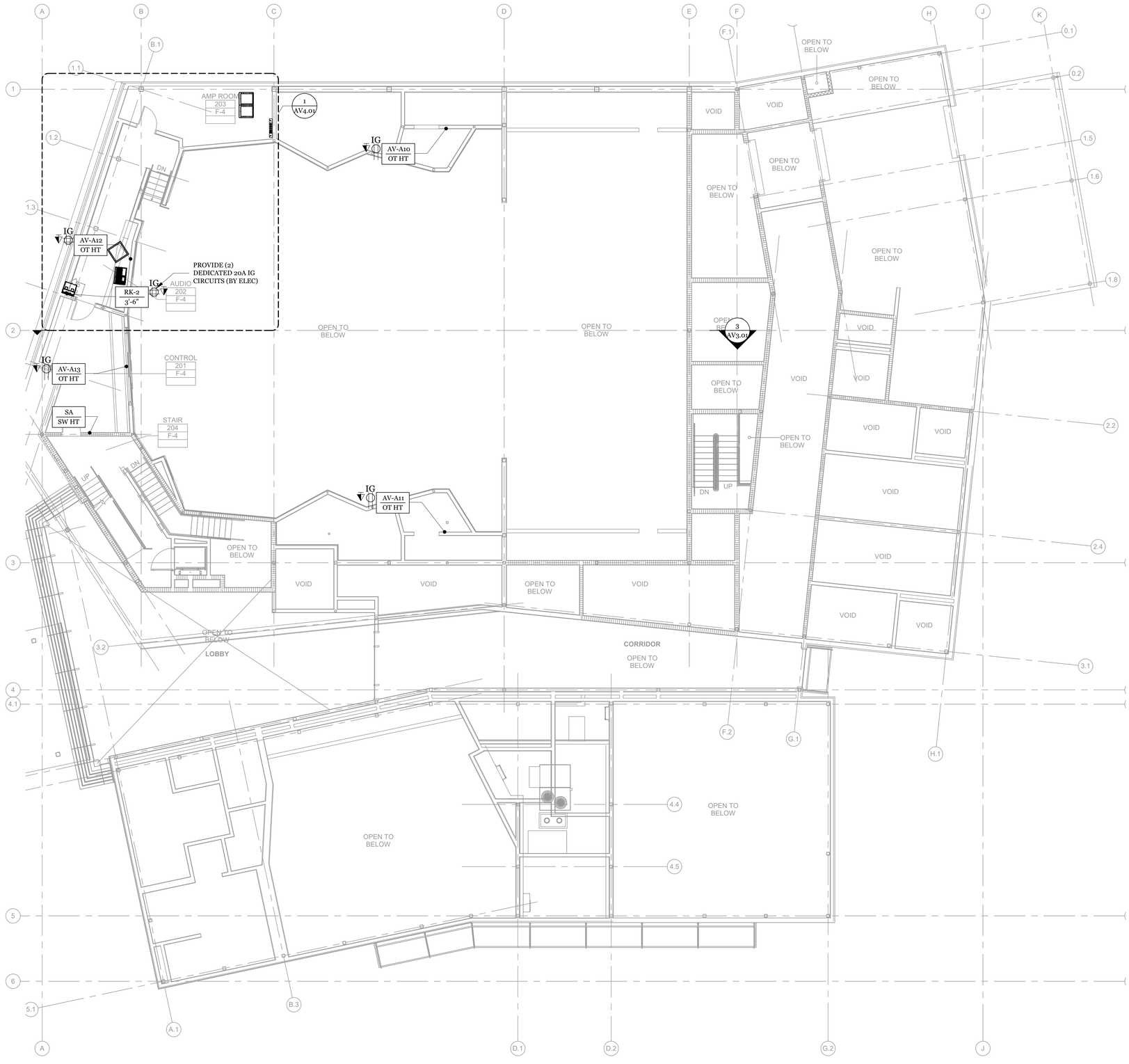

1 AV DEVICE PLAN AT LEVEL 2
1/8"=1'-0"

AV SYMBOL KEY

DEVICE LOCATION
AV PANEL TYPE
XXX
X'-X"
MOUNTING CONDITION
OR HEIGHT ABOVE IMMEDIATE
FINISHED FLOOR BELOW TO
CENTER OF BACKBOX

OT HT: PROJECT STANDARD OUTLET HEIGHT
SW HT: PROJECT STANDARD SWITCH HEIGHT
CLNG: MOUNTED TO CEILING
RAIL: MOUNTED TO RAILING OR PIPE
GRID: MOUNTED TO TENSION GRID

AUDIO
- AV-XX: CUSTOM AV PANEL & LOCATION
- MC-#: MICROPHONE CONNECTION & JACK QUANTITY
- WX: WIRELESS MICROPHONE ANTENNA
- FM: ASSISTIVE LISTENING ANTENNA

VIDEO
- V-#: VIDEO I/O & JACK QUANTITY
- VPJ: VIDEO PROJECTOR
- VPJ-W: SHORT THROW WALL MOUNT PROJECTOR
- VTV: CATV OUTLET
- FPD-T: FLAT PANEL DISPLAY W/ TILT MOUNT

LOUDSPEAKER
- LS-#: LOUDSPEAKER & JACK QUANTITY
- SC: CEILING MOUNT 70V LOUDSPEAKER
- SHC: HIGH CEILING MOUNT 70V LOUDSPEAKER
- SHP: PENDANT MOUNT 70V LOUDSPEAKER
- SA: 70V VOLUME CONTROL
- SAK: 70V VOLUME CONTROL W/ KEY TOGGLE

OTHER
- RK-#: EQUIPMENT RACK JUNCTION BOX & LOCATION
- SCRC: MOTORIZED SCREEN CONTROL
- CSP-#: CONTROL PANEL & TYPE
- HM: HOUSE MANAGER PANEL
- CM-#: PRODUCTION INTERCOM & JACK QUANTITY
- CM-W: PRODUCTION INTERCOM WALL STATION

LOOSE CONNECTION
TO PANEL
A/V EQUIPMENT TYPE
XXX
XXX
MOUNTING
CONDITION

AUDIO
- MIC: MICROPHONE

VIDEO
- VCAM: VIDEO CAMERA
- VPJ: VIDEO PROJECTOR
- FPD: FLAT PANEL DISPLAY

LOUDSPEAKER
- LS: LOUDSPEAKER
- SUB: SUBWOOFER

ELECTRICAL

- IG DUPLEX OUTLET, 120V / 20A (BY ELEC)
- IG QUAD OUTLET, 120V / DUAL 20A (BY ELEC)
- QUAD OUTLET, 120V / DUAL 20A (BY ELEC)
- DUPLEX OUTLET, 120V / 20A (BY ELEC)
- TEL/DATA OUTLET (BY ELEC)
- JUNCTION BOX (SEE DESCRIPTION) (BY ELEC)
- CATV OUTLET (SEE AV DRAWINGS)
- ISOLATED GROUND CONNECTION (BY ELEC)
- SPECIALTY OUTLET (SEE DESCRIPTION) (BY ELEC)
- COMPANY SWITCH (SEE DESCRIPTION) (BY ELEC)

GENERAL NOTES

1. ALL AC OUTLETS, CONDUIT & BACKBOXES BY ELEC.
2. REQUIRED STRUCTURAL BACKING BY ARCH.
3. AV CONTRACTOR TO COORDINATE WITH ELEC TO DETERMINE EXACT LOCATION OF AV BACKBOXES.

QUATTROCCHI KWOK ARCHITECTS
Main Office:
636 Fifth Street, Santa Rosa, CA 95404
Pleasanton Office:
600 Main Street, Suite E,
Pleasanton, CA 94566
(707) 576-0829

LICENSED ARCHITECT
JIM THEISS
LICENSE # C22643
EXP JUNE 30, 2019
STATE OF CALIFORNIA

SIGNED: DECEMBER 14, 2018

The Shalleck Collaborative Inc.
Planning and Design of Theatres | Production Systems | AV
1533 Martin Luther King Jr Way
Berkeley, CA 94709
tel 415.956.0200
www.shalleck.com

FREEDOM HIGH SCHOOL

PERFORMING ARTS AND CTE FACILITIES

1050 NEROLY RD
OAKLEY, CA 94561

LIBERTY UNION HIGH SCHOOL DISTRICT

ARCH PROJECT NO: 1739.00
DRAWN BY:
DRAWING SCALE:
PTN: 61721-0068

BID SET

AUGUST 13, 2019

SHEET TITLE

AV DEVICE PLAN AT LEVEL 2

SHEET NUMBER

AV-1.02

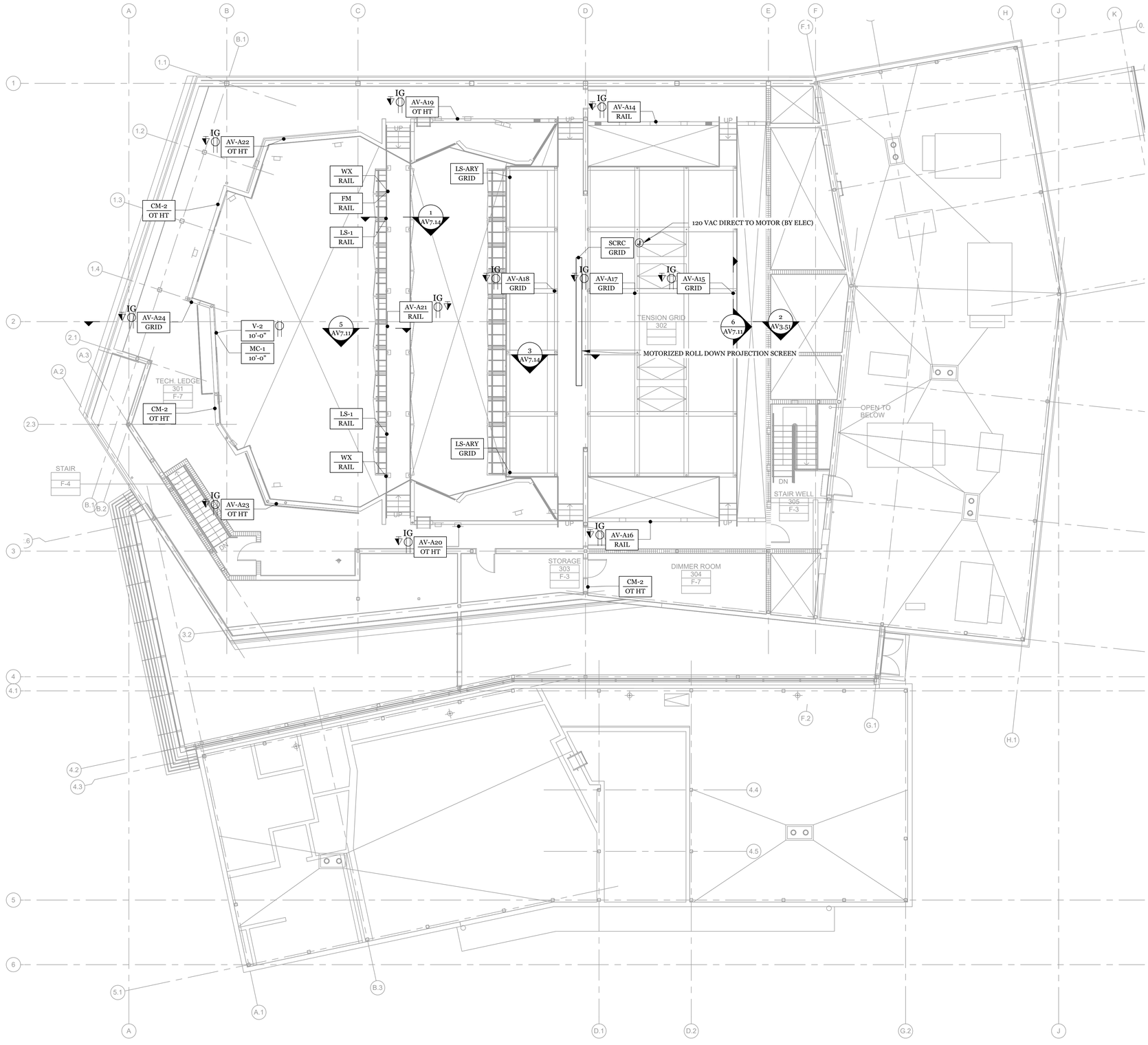

1 AV DEVICE PLAN AT LEVEL 3
1/8"=1'-0"

AV SYMBOL KEY

DEVICE LOCATION
AV PANEL TYPE
XXX
X'-X"
MOUNTING CONDITION OR HEIGHT ABOVE IMMEDIATE FINISHED FLOOR BELOW TO CENTER OF BACKBOX

OT HT: PROJECT STANDARD OUTLET HEIGHT
SW HT: PROJECT STANDARD SWITCH HEIGHT
CLNG: MOUNTED TO CEILING
RAIL: MOUNTED TO RAILING OR PIPE
GRID: MOUNTED TO TENSION GRID

AUDIO
- AV-XX: CUSTOM AV PANEL & LOCATION
- MC-#: MICROPHONE CONNECTION & JACK QUANTITY
- WX: WIRELESS MICROPHONE ANTENNA
- FM: ASSISTIVE LISTENING ANTENNA

VIDEO
- V-#: VIDEO I/O & JACK QUANTITY
- VPJ: VIDEO PROJECTOR
- VPJ-W: SHORT THROW WALL MOUNT PROJECTOR
- VTV: CATV OUTLET
- FPD-T: FLAT PANEL DISPLAY W/ TILT MOUNT

LOUDSPEAKER
- LS-#: LOUDSPEAKER & JACK QUANTITY
- SC: CEILING MOUNT 70V LOUDSPEAKER
- SHC: HIGH CEILING MOUNT 70V LOUDSPEAKER
- SHP: PENDANT MOUNT 70V LOUDSPEAKER
- SA: 70V VOLUME CONTROL
- SAK: 70V VOLUME CONTROL W/ KEY TOGGLE

OTHER
- RK-#: EQUIPMENT RACK JUNCTION BOX & LOCATION
- SCRC: MOTORIZED SCREEN CONTROL
- CSP-#: CONTROL PANEL & TYPE
- HM: HOUSE MANAGER PANEL
- CM-#: PRODUCTION INTERCOM & JACK QUANTITY
- CM-W: PRODUCTION INTERCOM WALL STATION

LOOSE CONNECTION TO PANEL
A/V EQUIPMENT TYPE
XXX
XXX
MOUNTING CONDITION

AUDIO
- MIC: MICROPHONE

VIDEO
- VCAM: VIDEO CAMERA
- VPJ: VIDEO PROJECTOR
- FPD: FLAT PANEL DISPLAY

LOUDSPEAKER
- LS: LOUDSPEAKER
- SUB: SUBWOOFER

ELECTRICAL

- IG DUPLEX OUTLET, 120V / 20A (BY ELEC)
- IG QUAD OUTLET, 120V / DUAL 20A (BY ELEC)
- QUAD OUTLET, 120V / DUAL 20A (BY ELEC)
- DUPLEX OUTLET, 120V / 20A (BY ELEC)
- TEL/DATA OUTLET (BY ELEC)
- JUNCTION BOX (SEE DESCRIPTION) (BY ELEC)
- CATV OUTLET (SEE AV DRAWINGS)
- ISOLATED GROUND CONNECTION (BY ELEC)
- SPECIALTY OUTLET (SEE DESCRIPTION) (BY ELEC)
- COMPANY SWITCH (SEE DESCRIPTION) (BY ELEC)

GENERAL NOTES

1. ALL AC OUTLETS, CONDUIT & BACKBOXES BY ELEC.
2. REQUIRED STRUCTURAL BACKING BY ARCH.
3. AV CONTRACTOR TO COORDINATE WITH ELEC TO DETERMINE EXACT LOCATION OF AV BACKBOXES.

QUATTROCCHI KWOK ARCHITECTS
Main Office:
636 Fifth Street, Santa Rosa, CA 95404
Pleasanton Office:
600 Main Street, Suite E,
Pleasanton, CA 94566
(707) 576-0829

LICENSED ARCHITECT
JIM THEISS
LICENSE # C22643
EXP JUNE 30, 2019
STATE OF CALIFORNIA

SIGNED: DECEMBER 14, 2018

The Shalleck Collaborative Inc.
Planning and Design of Theatres | Production Systems | AV
1533 Martin Luther King Jr Way
Berkeley, CA 94709
tel 415.956.0200
www.shalleck.com

FREEDOM HIGH SCHOOL

PERFORMING ARTS AND CTE FACILITIES

1050 NEROLY RD
OAKLEY, CA 94561

LIBERTY UNION HIGH SCHOOL DISTRICT

ARCH PROJECT NO: 1739.00
DRAWN BY:
DRAWING SCALE:
PTN: 61721-0068

BID SET

AUGUST 13, 2019

SHEET TITLE

AV DEVICE PLAN AT LEVEL 3

SHEET NUMBER

AV-1.03



1 AV DEVICE RCP AT LEVEL 1
1/8"=1'-0"

AV SYMBOL KEY

DEVICE LOCATION
AV PANEL TYPE
XXX
X'-X"
MOUNTING CONDITION OR HEIGHT ABOVE IMMEDIATE FINISHED FLOOR BELOW TO CENTER OF BACKBOX

OT HT: PROJECT STANDARD OUTLET HEIGHT
SW HT: PROJECT STANDARD SWITCH HEIGHT
CLNG: MOUNTED TO CEILING
RAIL: MOUNTED TO RAILING OR PIPE
GRID: MOUNTED TO TENSION GRID

AUDIO
- AV-XX: CUSTOM AV PANEL & LOCATION
- MC-#: MICROPHONE CONNECTION & JACK QUANTITY
- WX: WIRELESS MICROPHONE ANTENNA
- FM: ASSISTIVE LISTENING ANTENNA

VIDEO
- V-#: VIDEO I/O & JACK QUANTITY
- VPJ: VIDEO PROJECTOR
- VPJ-W: SHORT THROW WALL MOUNT PROJECTOR
- VTV: CATV OUTLET
- FPD-T: FLAT PANEL DISPLAY W/ TILT MOUNT

LOUDSPEAKER
- LS-#: LOUDSPEAKER & JACK QUANTITY
- SC: CEILING MOUNT 70V LOUDSPEAKER
- SHC: HIGH CEILING MOUNT 70V LOUDSPEAKER
- SHP: PENDANT MOUNT 70V LOUDSPEAKER
- SA: 70V VOLUME CONTROL
- SAK: 70V VOLUME CONTROL W/ KEY TOGGLE

OTHER
- RK-#: EQUIPMENT RACK JUNCTION BOX & LOCATION
- SCRC: MOTORIZED SCREEN CONTROL
- CSP-#: CONTROL PANEL & TYPE
- HM: HOUSE MANAGER PANEL
- CM-#: PRODUCTION INTERCOM & JACK QUANTITY
- CM-W: PRODUCTION INTERCOM WALL STATION

LOOSE CONNECTION TO PANEL
A/V EQUIPMENT TYPE
XXX
XXX
MOUNTING CONDITION

AUDIO
- MIC: MICROPHONE

VIDEO
- VCAM: VIDEO CAMERA
- VPJ: VIDEO PROJECTOR
- FPD: FLAT PANEL DISPLAY

LOUDSPEAKER
- LS: LOUDSPEAKER
- SUB: SUBWOOFER

ELECTRICAL

- IG — IG DUPLEX OUTLET, 120V / 20A (BY ELEC)
- IG — IG QUAD OUTLET, 120V / DUAL 20A (BY ELEC)
- QUAD OUTLET, 120V / DUAL 20A (BY ELEC)
- DUPLEX OUTLET, 120V / 20A (BY ELEC)
- TEL/DATA OUTLET (BY ELEC)
- J — JUNCTION BOX (SEE DESCRIPTION) (BY ELEC)
- CATV OUTLET (SEE AV DRAWINGS)
- IG — ISOLATED GROUND CONNECTION (BY ELEC)
- SPECIALTY OUTLET (SEE DESCRIPTION) (BY ELEC)
- COMPANY SWITCH (SEE DESCRIPTION) (BY ELEC)

GENERAL NOTES

1. ALL AC OUTLETS, CONDUIT & BACKBOXES BY ELEC.
2. REQUIRED STRUCTURAL BACKING BY ARCH.
3. AV CONTRACTOR TO COORDINATE WITH ELEC TO DETERMINE EXACT LOCATION OF AV BACKBOXES.

QUATTROCCHI KWOK ARCHITECTS
Main Office:
636 Fifth Street, Santa Rosa, CA 95404
Pleasanton Office:
600 Main Street, Suite E,
Pleasanton, CA 94566
(707) 576-0829

LICENSED ARCHITECT
JIM THEISS
LICENSE # C22643
EXP JUNE 30, 2019
STATE OF CALIFORNIA

SIGNED: DECEMBER 14, 2018

The Shalleck Collaborative Inc.
Planning and Design of Theatres | Production Systems | AV
1533 Martin Luther King Jr Way
Berkeley, CA 94709
tel 415.956.0200
www.shalleck.com

FREEDOM HIGH SCHOOL

PERFORMING ARTS AND CTE FACILITIES

1050 NEROLY RD
OAKLEY, CA 94561

LIBERTY UNION HIGH SCHOOL DISTRICT

ARCH PROJECT NO: 1739.00
DRAWN BY:
DRAWING SCALE:
PTN: 61721-0068

BID SET

AUGUST 13, 2019

SHEET TITLE

AV DEVICE RCP AT LEVEL 1

SHEET NUMBER

AV-2.01



1 AV DEVICE RCP AT LEVEL 2
1/8"=1'-0"

AV SYMBOL KEY

DEVICE LOCATION
AV PANEL TYPE
XXX
X'-X"
MOUNTING CONDITION
OR HEIGHT ABOVE IMMEDIATE
FINISHED FLOOR BELOW TO
CENTER OF BACKBOX

OT HT: PROJECT STANDARD OUTLET HEIGHT
SW HT: PROJECT STANDARD SWITCH HEIGHT
CLNG: MOUNTED TO CEILING
RAIL: MOUNTED TO RAILING OR PIPE
GRID: MOUNTED TO TENSION GRID

AUDIO
- AV-XX: CUSTOM AV PANEL & LOCATION
- MC-#: MICROPHONE CONNECTION & JACK QUANTITY
- WX: WIRELESS MICROPHONE ANTENNA
- FM: ASSISTIVE LISTENING ANTENNA

VIDEO
- V-#: VIDEO I/O & JACK QUANTITY
- VPJ: VIDEO PROJECTOR
- VPJ-W: SHORT THROW WALL MOUNT PROJECTOR
- VTV: CATV OUTLET
- FPD-T: FLAT PANEL DISPLAY W/ TILT MOUNT

LOUDSPEAKER
- LS-#: LOUDSPEAKER & JACK QUANTITY
- SC: CEILING MOUNT 70V LOUDSPEAKER
- SHC: HIGH CEILING MOUNT 70V LOUDSPEAKER
- SHP: PENDANT MOUNT 70V LOUDSPEAKER
- SA: 70V VOLUME CONTROL
- SAK: 70V VOLUME CONTROL W/ KEY TOGGLE

OTHER
- RK-#: EQUIPMENT RACK JUNCTION BOX & LOCATION
- SCRC: MOTORIZED SCREEN CONTROL
- CSP-#: CONTROL PANEL & TYPE
- HM: HOUSE MANAGER PANEL
- CM-#: PRODUCTION INTERCOM & JACK QUANTITY
- CM-W: PRODUCTION INTERCOM WALL STATION

LOOSE CONNECTION
TO PANEL
A/V EQUIPMENT TYPE
XXX
XXX
MOUNTING
CONDITION

AUDIO
- MIC: MICROPHONE

VIDEO
- VCAM: VIDEO CAMERA
- VPJ: VIDEO PROJECTOR
- FPD: FLAT PANEL DISPLAY

LOUDSPEAKER
- LS: LOUDSPEAKER
- SUB: SUBWOOFER

ELECTRICAL

- IG DUPLEX OUTLET, 120V / 20A (BY ELEC)
- IG QUAD OUTLET, 120V / DUAL 20A (BY ELEC)
- QUAD OUTLET, 120V / DUAL 20A (BY ELEC)
- DUPLEX OUTLET, 120V / 20A (BY ELEC)
- TEL/DATA OUTLET (BY ELEC)
- J JUNCTION BOX (SEE DESCRIPTION) (BY ELEC)
- CATV OUTLET (SEE AV DRAWINGS)
- IG ISOLATED GROUND CONNECTION (BY ELEC)
- SPECIALTY OUTLET (SEE DESCRIPTION) (BY ELEC)
- COMPANY SWITCH (SEE DESCRIPTION) (BY ELEC)

GENERAL NOTES

1. ALL AC OUTLETS, CONDUIT & BACKBOXES BY ELEC.
2. REQUIRED STRUCTURAL BACKING BY ARCH.
3. AV CONTRACTOR TO COORDINATE WITH ELEC TO DETERMINE EXACT LOCATION OF AV BACKBOXES.

QUATTROCCHI KWOK ARCHITECTS
Main Office:
636 Fifth Street, Santa Rosa, CA 95404
Pleasanton Office:
600 Main Street, Suite E,
Pleasanton, CA 94566
(707) 576-0829

LICENSED ARCHITECT
JIM THEISS
LICENSE # C22643
EXP JUNE 30, 2019
STATE OF CALIFORNIA

SIGNED: DECEMBER 14, 2018

The Shalleck Collaborative Inc.
Planning and Design of Theatres | Production Systems | AV
1533 Martin Luther King Jr Way
Berkeley, CA 94709
tel 415.956.0200
www.shalleck.com

FREEDOM HIGH SCHOOL

PERFORMING ARTS AND CTE FACILITIES

1050 NEROLY RD
OAKLEY, CA 94561

LIBERTY UNION HIGH SCHOOL DISTRICT

ARCH PROJECT NO: 1739.00
DRAWN BY:
DRAWING SCALE:
PTN: 61721-0068

BID SET

AUGUST 13, 2019

SHEET TITLE

AV DEVICE RCP AT LEVEL 2

SHEET NUMBER

AV-2.02

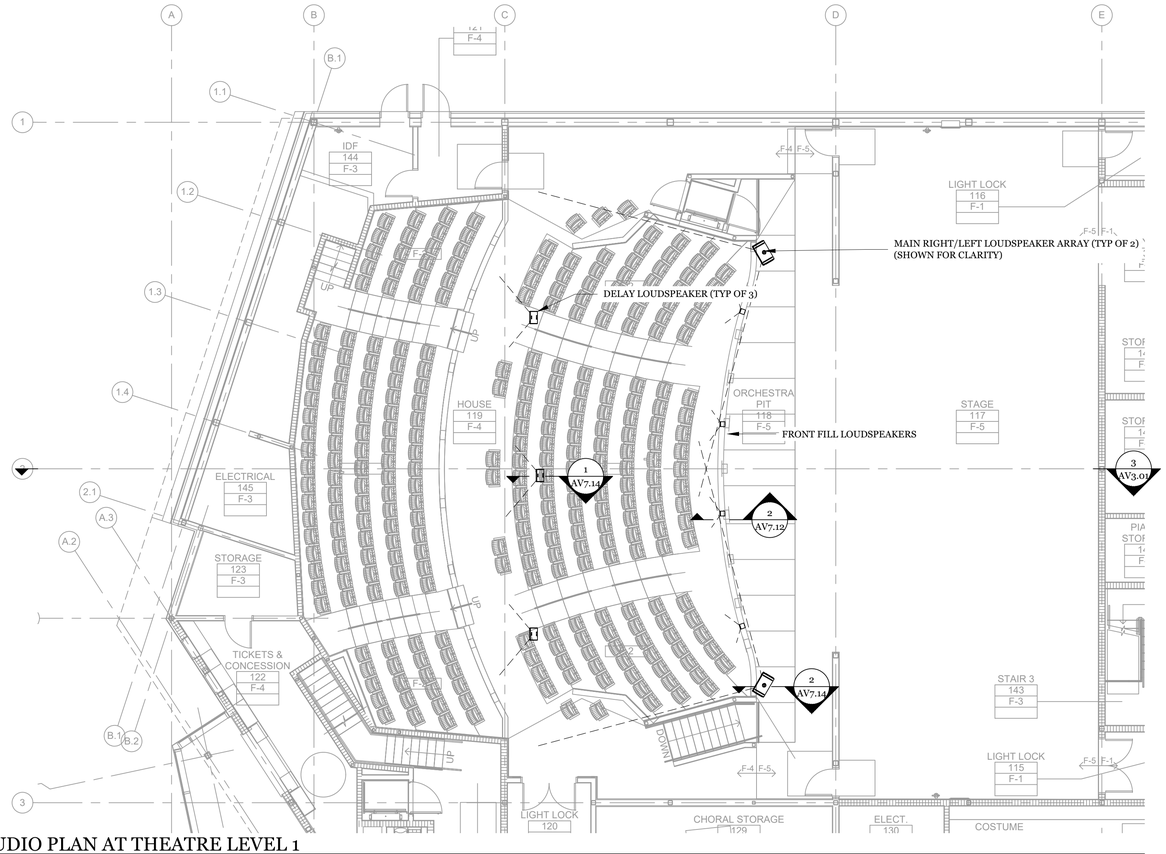

1 AUDIO PLAN AT THEATRE LEVEL 1
1/8"=1'-0"

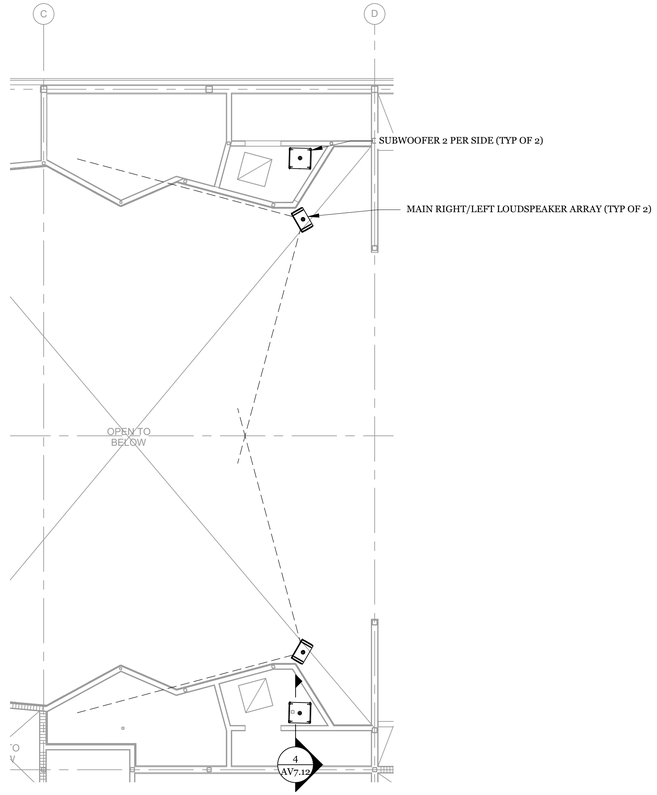

2 AUDIO PLAN AT THEATRE LEVEL 2
1/8"=1'-0"

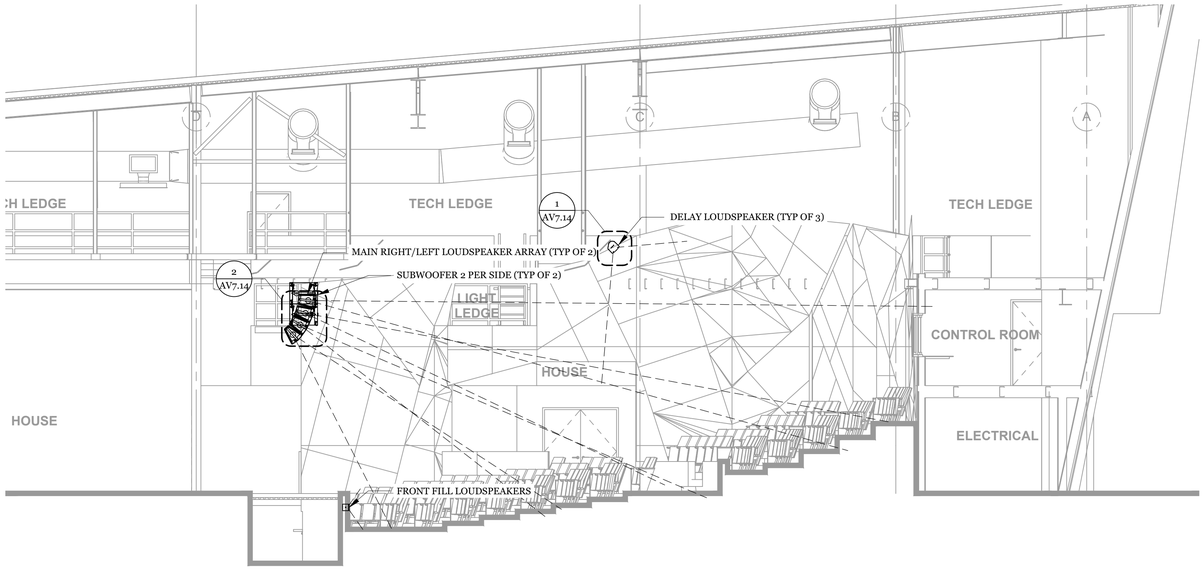

3 AUDIO SECTION AT THEATRE
1/8"=1'-0"

GENERAL NOTES

1. ALL AC OUTLETS, CONDUIT & BACKBOXES BY ELEC.
2. REQUIRED STRUCTURAL BACKING BY ARCH.
3. AV CONTRACTOR TO COORDINATE WITH ELEC TO DETERMINE EXACT LOCATION OF AV BACKBOXES.

QUATTROCCHI KWOK ARCHITECTS
Main Office:
636 Fifth Street, Santa Rosa, CA 95404
Pleasanton Office:
600 Main Street, Suite E,
Pleasanton, CA 94566
(707) 576-0829

LICENSED ARCHITECT
JIM THEISS
LICENSE # C22643
EXP JUNE 30, 2019
STATE OF CALIFORNIA

SIGNED: DECEMBER 14, 2018

The Shalleck Collaborative Inc.
Planning and Design of Theatres | Production Systems | AV
1533 Martin Luther King Jr Way
Berkeley, CA 94709
tel 415-956-0200
www.shalleck.com

FREEDOM HIGH SCHOOL

PERFORMING ARTS AND CTE FACILITIES

1050 NEROLY RD
OAKLEY, CA 94561

LIBERTY UNION HIGH SCHOOL DISTRICT

ARCH PROJECT NO:	1739.00
DRAWN BY:	
DRAWING SCALE:	
PTN:	61721-0068

BID SET

AUGUST 13, 2019

SHEET TITLE

AUDIO PLAN & SECTION AT THEATRE

SHEET NUMBER

AV-3.01

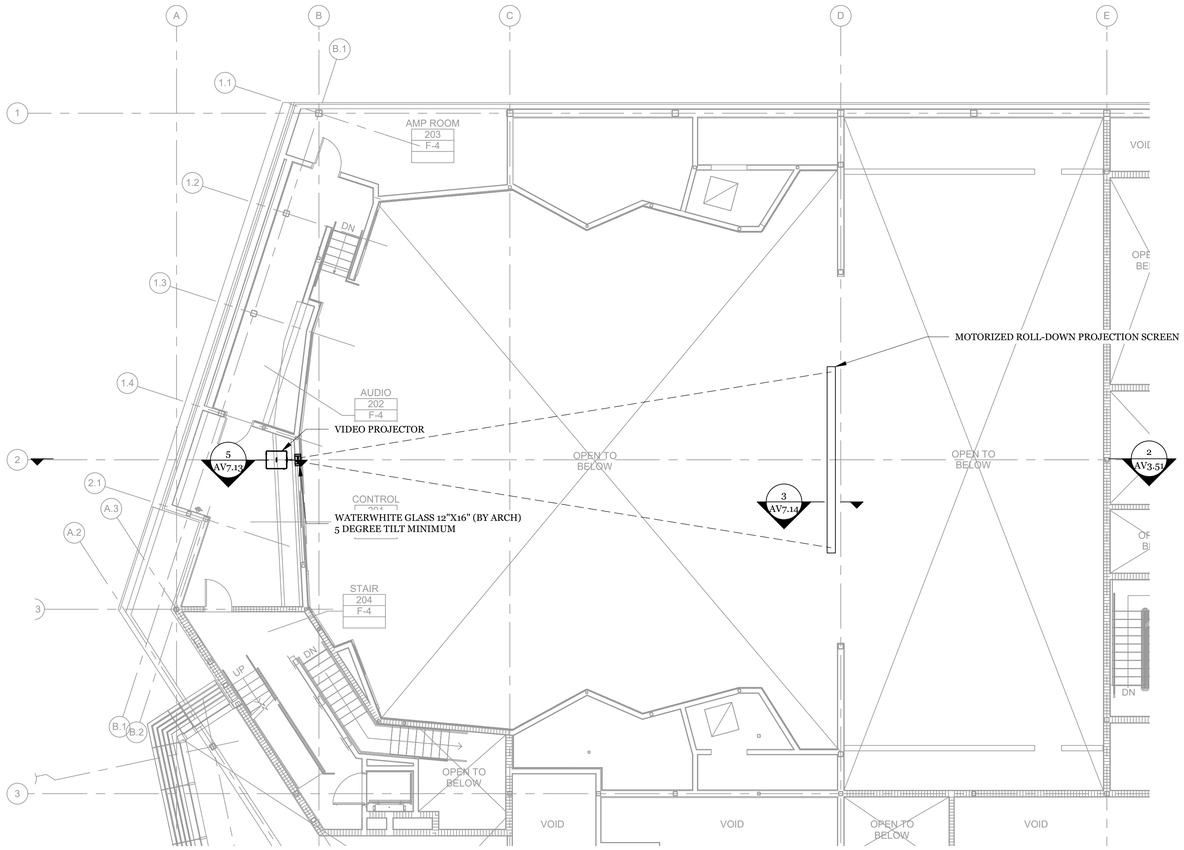

1 VIDEO PLAN AT THEATRE LEVEL 1
1/8"=1'-0"

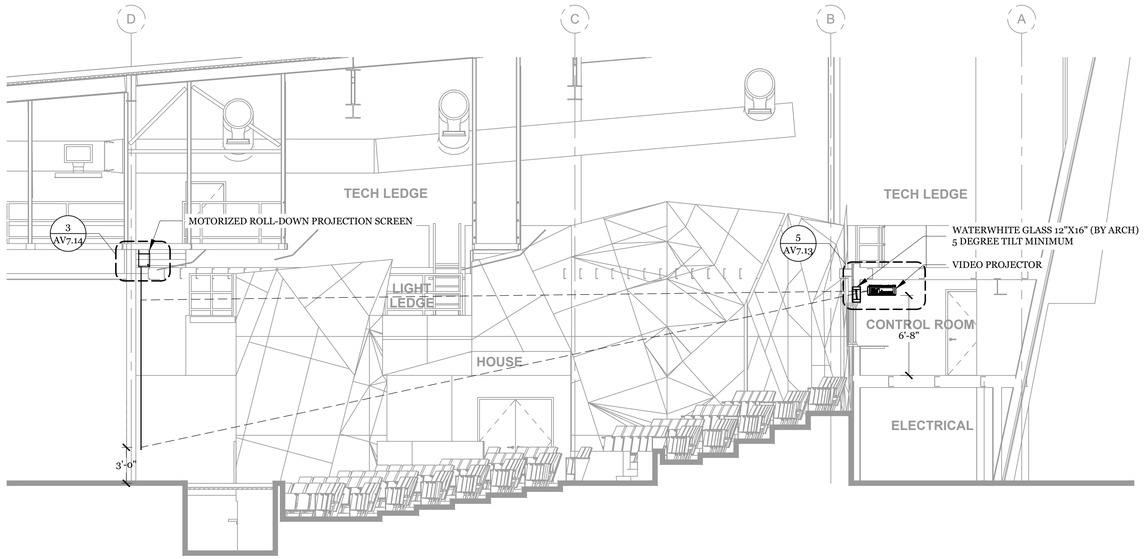

2 VIDEO SECTION AT THEATRE
1/8"=1'-0"

GENERAL NOTES

1. ALL AC OUTLETS, CONDUIT & BACKBOXES BY ELEC.
2. REQUIRED STRUCTURAL BACKING BY ARCH.
3. AV CONTRACTOR TO COORDINATE WITH ELEC TO DETERMINE EXACT LOCATION OF AV BACKBOXES.

QUATTROCCHI KWOK ARCHITECTS

Main Office:
636 Fifth Street, Santa Rosa, CA 95404
Pleasanton Office:
600 Main Street, Suite E,
Pleasanton, CA 94566
(707) 576-0829

LICENSED ARCHITECT
JIM THEISS
LICENSE # C22643
EXP JUNE 30, 2019
STATE OF CALIFORNIA

SIGNED: DECEMBER 14, 2018

The Shalleck Collaborative Inc.
Planning and Design of Theatres | Production Systems | AV
1533 Martin Luther King Jr Way
Berkeley, CA 94709
tel 415-956-1000
www.shalleck.com

FREEDOM HIGH SCHOOL

PERFORMING ARTS AND CTE FACILITIES

1050 NEROLY RD
OAKLEY, CA 94561

LIBERTY UNION HIGH SCHOOL DISTRICT

ARCH PROJECT NO:	1739.00
DRAWN BY:	
DRAWING SCALE:	
PTN:	61721-0068

BID SET

AUGUST 13, 2019

SHEET TITLE

VIDEO PLAN & SECTION AT THEATRE

SHEET NUMBER

AV-3.51

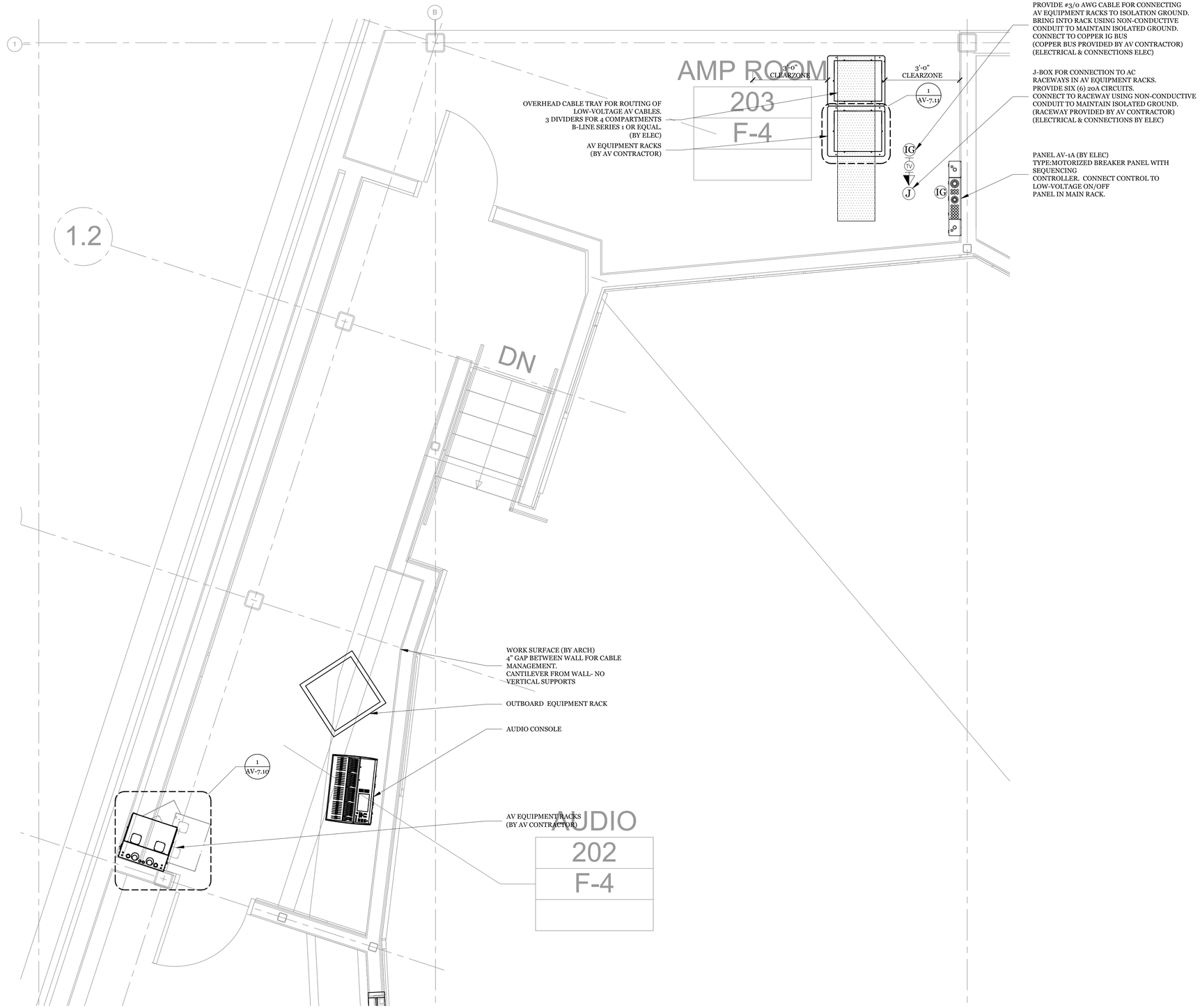

1 AV ENLARGED PLAN AT AUDIO ROOM
1/2"=1'-0"

AV SYMBOL KEY

DEVICE LOCATION
AV PANEL TYPE
XXX
X'-X"
MOUNTING CONDITION OR HEIGHT ABOVE IMMEDIATE FINISHED FLOOR BELOW TO CENTER OF BACKBOX

OT HT: PROJECT STANDARD OUTLET HEIGHT
SW HT: PROJECT STANDARD SWITCH HEIGHT
CLNG: MOUNTED TO CEILING
RAIL: MOUNTED TO RAILING OR PIPE
GRID: MOUNTED TO TENSION GRID

AUDIO
- AV-XX: CUSTOM AV PANEL & LOCATION
- MC-#: MICROPHONE CONNECTION & JACK QUANTITY
- WX: WIRELESS MICROPHONE ANTENNA
- FM: ASSISTIVE LISTENING ANTENNA

VIDEO
- V-#: VIDEO I/O & JACK QUANTITY
- VPJ: VIDEO PROJECTOR
- VPJ-W: SHORT THROW WALL MOUNT PROJECTOR
- VTV: CATV OUTLET
- FPD-T: FLAT PANEL DISPLAY W/ TILT MOUNT

LOUDSPEAKER
- LS-#: LOUDSPEAKER & JACK QUANTITY
- SC: CEILING MOUNT 70V LOUDSPEAKER
- SHC: HIGH CEILING MOUNT 70V LOUDSPEAKER
- SHP: PENDANT MOUNT 70V LOUDSPEAKER
- SA: 70V VOLUME CONTROL
- SAK: 70V VOLUME CONTROL W/ KEY TOGGLE

OTHER
- RK-#: EQUIPMENT RACK JUNCTION BOX & LOCATION
- SCRC: MOTORIZED SCREEN CONTROL
- CSP-#: CONTROL PANEL & TYPE
- HM: HOUSE MANAGER PANEL
- CM-#: PRODUCTION INTERCOM & JACK QUANTITY
- CM-W: PRODUCTION INTERCOM WALL STATION

LOOSE CONNECTION TO PANEL
A/V EQUIPMENT TYPE
XXX
XXX
MOUNTING CONDITION

AUDIO
- MIC: MICROPHONE

VIDEO
- VCAM: VIDEO CAMERA
- VPJ: VIDEO PROJECTOR
- FPD: FLAT PANEL DISPLAY

LOUDSPEAKER
- LS: LOUDSPEAKER
- SUB: SUBWOOFER

ELECTRICAL

- IG — IG DUPLEX OUTLET, 120V / 20A (BY ELEC)
- IG — IG QUAD OUTLET, 120V / DUAL 20A (BY ELEC)
- QUAD OUTLET, 120V / DUAL 20A (BY ELEC)
- DUPLEX OUTLET, 120V / 20A (BY ELEC)
- TEL/DATA OUTLET (BY ELEC)
- J — JUNCTION BOX (SEE DESCRIPTION) (BY ELEC)
- CATV — CATV OUTLET (SEE AV DRAWINGS)
- IG — ISOLATED GROUND CONNECTION (BY ELEC)
- SPECIALTY OUTLET (SEE DESCRIPTION) (BY ELEC)
- COMPANY SWITCH (SEE DESCRIPTION) (BY ELEC)

GENERAL NOTES

1. ALL AC OUTLETS, CONDUIT & BACKBOXES BY ELEC.
2. REQUIRED STRUCTURAL BACKING BY ARCH.
3. AV CONTRACTOR TO COORDINATE WITH ELEC TO DETERMINE EXACT LOCATION OF AV BACKBOXES.

QUATTROCCHI KWOK ARCHITECTS
Main Office:
636 Fifth Street, Santa Rosa, CA 95404
Pleasanton Office:
600 Main Street, Suite E,
Pleasanton, CA 94566
(707) 576-0829

LICENSED ARCHITECT
JIM THEISS
LICENSE # C22643
EXP JUNE 30, 2019
STATE OF CALIFORNIA

SIGNED: DECEMBER 14, 2018

The Shalleck Collaborative Inc.
Planning and Design of Theatres | Production Systems | AV
1533 Martin Luther King Jr Way
Berkeley, CA 94709
tel 415-956-1000
www.shalleck.com

FREEDOM HIGH SCHOOL

PERFORMING ARTS AND CTE FACILITIES

1050 NEROLY RD
OAKLEY, CA 94561

LIBERTY UNION HIGH SCHOOL DISTRICT

ARCH PROJECT NO: 1739.00
DRAWN BY:
DRAWING SCALE:
PTN: 61721-0068

BID SET

AUGUST 13, 2019

SHEET TITLE

AV ENLARGED PLANS

SHEET NUMBER

AV-4.01

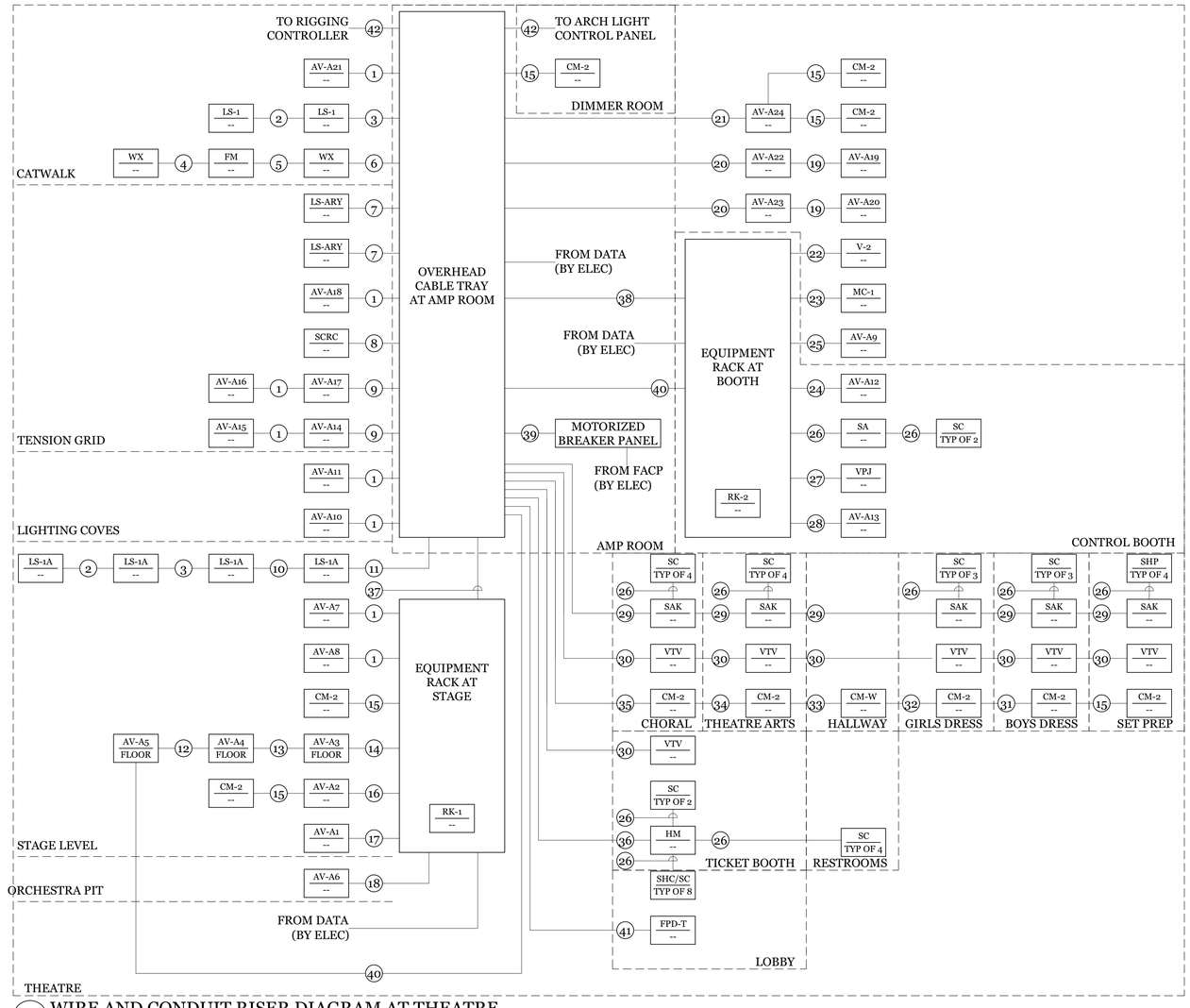

1 WIRE AND CONDUIT RISER DIAGRAM AT THEATRE
NTS

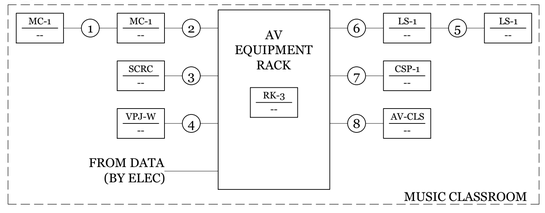

2 WIRE AND CONDUIT RISER DIAGRAM AT MUSIC CLASSROOM
NTS

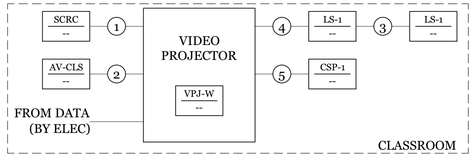

3 WIRE AND CONDUIT RISER DIAGRAM AT CLASSROOM
NTS

WIRE & CONDUIT TABLE

RUN NUMBER	WIRE QTY	WIRE TYPE	CONDUIT QTY	CONDUIT SIZE	NOTES
1	4 1 2 1 2 2 --	B1 C2 C5 C9 C10C D2 --	1 1 1 1-EMPTY	3/4" 1-1/4" 1-0" 1-0"	
2	1	D2	1	3/4"	
3	2	D2	1	1-0"	
4	1	C12	1	1-0"	
5	1 1	C12 C13	1	1-1/4"	
6	2 1	C12 C13	1	1-1/2"	
7	4	D2	1	1-1/4"	
8	1	C8	1	3/4"	
9	8 2 4 1 4 4 --	B1 C2 C5 C9 C10C D2 --	1 1 1 1-EMPTY	3/4" 2-0" 1-1/4" 1-1/2"	
10	3	D2	1	1-1/4"	
11	4	D2	1	1-1/4"	
12 FLOOR BOX	1 2 4 1 1 2 1 -- DATA 120VAC	A1 B1 C5 C9 C10C C15 D2 -- DATA 120VAC	1 1 1 1 1-EMPTY (BY ELEC) (BY ELEC)	3/4" 3/4" 1-1/2" 3/4" 1-1/2" (BY ELEC) (BY ELEC)	KNOCKOUTS: 3/4" - 4 1-0" - 4 1-1/2" - 4 2-0" - 4
13 FLOOR BOX	2 4 8 1 2 1 2 -- DATA 120VAC	A1 B1 C5 C9 C10C C15 D2 -- DATA 120VAC	1 1 1 1 1-EMPTY (BY ELEC) (BY ELEC)	3/4" 3/4" 2-0" 1-0" 1-1/2" (BY ELEC) (BY ELEC)	KNOCKOUTS: 3/4" - 4 1-0" - 4 1-1/2" - 4 2-0" - 4
14 FLOOR BOX	3 6 12 1 3 3 -- DATA 120VAC	A1 B1 C5 C9 C10C D2 -- DATA 120VAC	1 1 1 1 1-EMPTY (BY ELEC) (BY ELEC)	3/4" 3/4" 2-0" 1-1/4" 1-1/2" (BY ELEC) (BY ELEC)	KNOCKOUTS: 3/4" - 4 1-0" - 4 1-1/2" - 4 2-0" - 4
15	1	C2	1	3/4"	
16	5 4 2 8 1 4 4 --	A1 B1 C2 C5 C9 C10C D2 --	1 1 1 1 1-EMPTY	3/4" 3/4" 2-0" 1-1/4" 1-1/2"	
17	5 4 1 8 1 4 4 --	A1 B1 C2 C5 C9 C10C D2 --	1 1 1 1 1-EMPTY	3/4" 3/4" 2-0" 1-1/4" 1-1/2"	
18	4 4 1 8 1 4 4 --	A1 B1 C2 C5 C9 C10C D2 --	1 1 1 1 1-EMPTY	3/4" 3/4" 2-0" 1-1/4" 1-1/2"	

WIRE & CONDUIT TABLE

RUN NUMBER	WIRE QTY	WIRE TYPE	CONDUIT QTY	CONDUIT SIZE	NOTES
19	2 1 1 1	B1 C2 C10C D2	1 1 1	3/4" 1-0" 3/4"	
20	4 2 2 2	B1 C2 C10C D2	1 1 1	3/4" 1-0" 1-0"	
21	2 3 1 1	B1 C2 C10C D2	1 1 1	3/4" 1-0" 3/4"	
22	2	C10C	1	3/4"	
23	1	A1	1	3/4"	
24	4 1 8 1 4 2 --	B1 C2 C5 C9 C10C C12 --	1 1 1 1-EMPTY	3/4" 2-0" 1-1/4" 1-1/2"	
25 FLOOR BOX	2 3 1 2 3 2 -- DATA 120VAC	A1 B1 C2 C5 C10C -- DATA 120VAC	1 1 1 1-EMPTY (BY ELEC) (BY ELEC)	3/4" 3/4" 1-1/2" 1-1/2" (BY ELEC) (BY ELEC)	KNOCKOUTS: 3/4" - 8 1-1/2" - 12
26	1	D3	1	3/4"	
27	1 1	C5 C15	1	1-0"	
28	2 5 2 5 1 4 --	A1 B1 C2 C5 C9 C10C --	1 1 1 1-EMPTY	3/4" 3/4" 2-0" 1-1/2"	
29	1	D4	1	3/4"	
30	1	C9	1	3/4"	
31	2	C2	1	1-0"	
32	3	C2	1	1-0"	
33	4	C2	1	1-0"	
34	5	C2	1	1-1/4"	
35	6	C2	1	1-1/4"	
36	1 1 1 1 1	A1 B1 C2 C8 D1	1 1 1 1	3/4" 3/4" 1-0" 3/4"	
37 TRUNK	17 27 8 42 1 19 19 --	A1 B1 C2 C5 C9 C10C D2 --	1 1 5 2 1-EMPTY	1-1/4" 1-1/4" 2-0" 2-0" 2-0"	
38 TRUNK	5 31 6 39 1 1 20 2 1 --	A1 B1 C2 C5 C8 C9 C10C C12 D3 --	1 1 6 1 1-EMPTY	1-1/4" 1-1/2" 2-0" 1-0" 2-0"	
39	1 1	C5 C8	1	3/4"	
40	3	C15	1	1-0"	
41	1 -- DATA 120VAC	C9 -- DATA 120VAC	1 1-EMPTY (BY ELEC) (BY ELEC)	3/4" 1-0" (BY ELEC) (BY ELEC)	
42	1	C5	1	3/4"	

WIRE & CONDUIT TABLE

RUN NUMBER	WIRE QTY	WIRE TYPE	CONDUIT QTY	CONDUIT SIZE	NOTES
1	1	A1	1	3/4"	
2	2	A1	1	3/4"	
3	1	C8	1	3/4"	
4	1 1	C5 HDMI*	1	1-1/2"	*USE HDMI OVER FIBER CABLE
5	1	D1	1	3/4"	
6	2	D1	1	3/4"	
7	3 1	C5 C8	1	3/4"	
8	1	C15	1	1-1/4"	

WIRE & CONDUIT TABLE

RUN NUMBER	WIRE QTY	WIRE TYPE	CONDUIT QTY	CONDUIT SIZE	NOTES
1	1	C8	1	3/4"	
2	1	C15	1	1-1/4"	
3	1	D1	1	3/4"	
4	2	D1	1	3/4"	
5	3 1	C5 C7	1	3/4"	

AV WIRE RISER NOTES & KEY

1. WIRES OF SIMILAR WIRETYPE CLASSIFICATION (A, B, C, D or E) MAY BE COMBINED INTO A SINGLE CONDUIT.
2. MINIMUM CONDUIT SIZE IS 3/4".
3. CONDUIT SIZE TO BE VERIFIED IN WRITING BY AV CONTRACTOR WITHIN 30 DAYS OF CONTRACT AWARD.
4. ALL CONDUIT & BACKBOXES BY ELECTRICAL.
5. FOLLOW CONDUIT SEPARATION TABLES AS INDICATED ON KEY SHEET & IN SPECIFICATIONS.
6. INCREASE CONDUIT TO NEXT SIZE UP FOR RUNS GREATER THAN 50'-0" WITHOUT A JUNCTION BOX.

QUATTROCCHI KWOK ARCHITECTS
Main Office:
636 Fifth Street, Santa Rosa, CA 95404
Pleasanton Office:
600 Main Street, Suite E,
Pleasanton, CA 94566
(707) 576-0829

LICENSED ARCHITECT
JIM THEISS
LICENSE # C22643
EXP JUNE 30, 2019
STATE OF CALIFORNIA

SIGNED: DECEMBER 14, 2018

The Shalleck Collaborative Inc.
Planning and Design of Theatres | Production Systems | AV
1533 Martin Luther King Jr Way
Berkeley, CA 94709
tel 415-956-0200
www.shalleck.com

FREEDOM HIGH SCHOOL

PERFORMING ARTS AND CTE FACILITIES

1050 NEROLY RD
OAKLEY, CA 94561

LIBERTY UNION HIGH SCHOOL DISTRICT

ARCH PROJECT NO: 1739.00
DRAWN BY:
DRAWING SCALE:
PTN: 61721-0068

BID SET

AUGUST 13, 2019

SHEET TITLE

WIRE AND CONDUIT RISER DIAGRAMS

SHEET NUMBER

AV-5.01

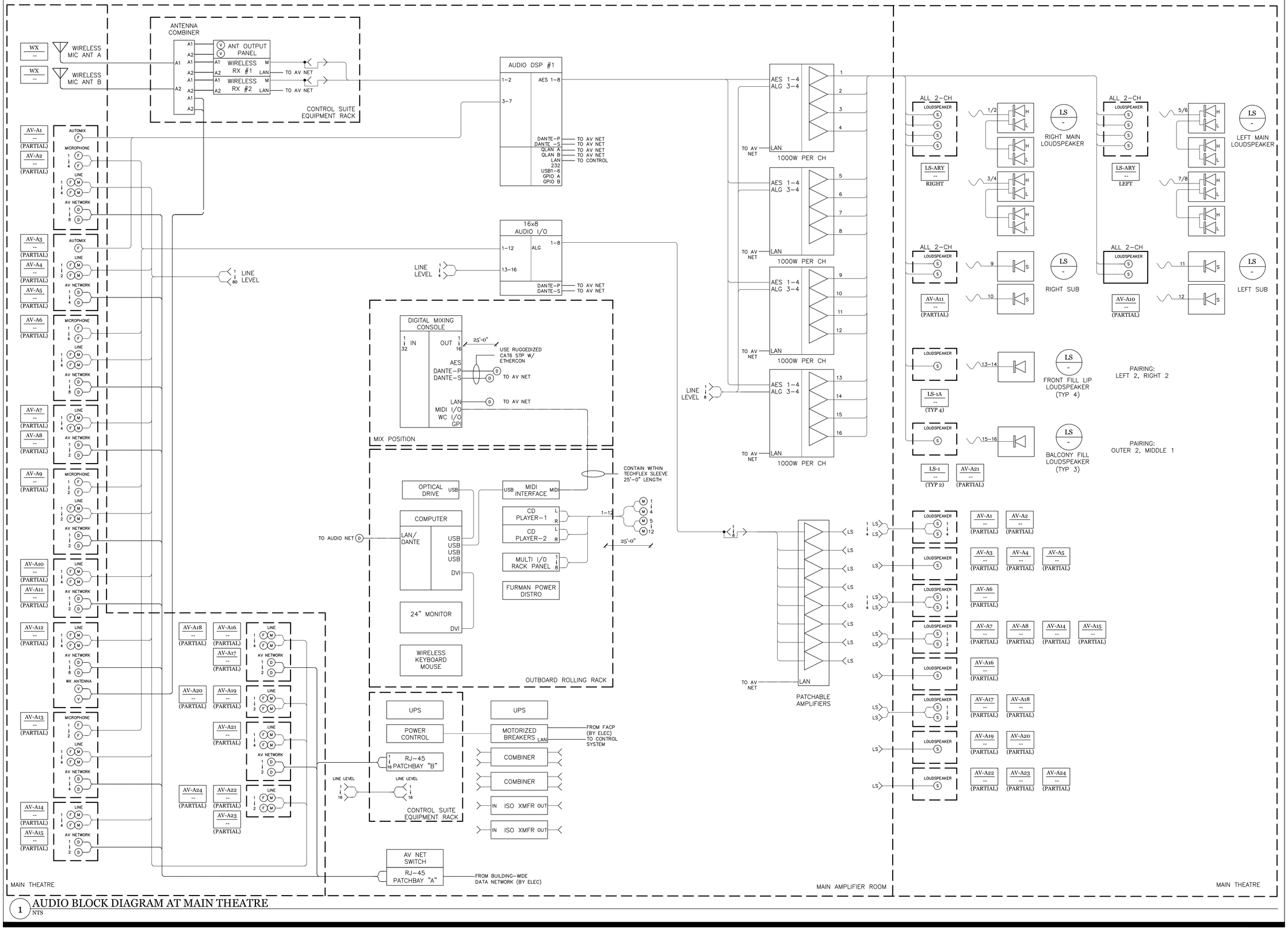

1 AUDIO BLOCK DIAGRAM AT MAIN THEATRE
NTS

QUATTROCCHI KWOK ARCHITECTS
Main Office:
636 Fifth Street, Santa Rosa, CA 95404
Pleasanton Office:
600 Main Street, Suite E,
Pleasanton, CA 94566
(707) 576-0829

LICENSED ARCHITECT
JIM THEISS
LICENSE # C22643
EXP JUNE 30, 2019
STATE OF CALIFORNIA

SIGNED: DECEMBER 14, 2018

The Shalleck Collaborative Inc.
Planning and Design of Theatres | Production Systems | AV
1533 Martin Luther King Jr Way
Berkeley, CA 94709
tel 415-956-0200
www.shalleck.com

FREEDOM HIGH SCHOOL

PERFORMING ARTS AND CTE FACILITIES

1050 NEROLY RD
OAKLEY, CA 94561

LIBERTY UNION HIGH SCHOOL DISTRICT

ARCH PROJECT NO: 1739.00
DRAWN BY:
DRAWING SCALE:
PTN: 61721-0068

BID SET

AUGUST 13, 2019

SHEET TITLE

AUDIO BLOCK DIAGRAM AT THEATRE

SHEET NUMBER

AV-5.10

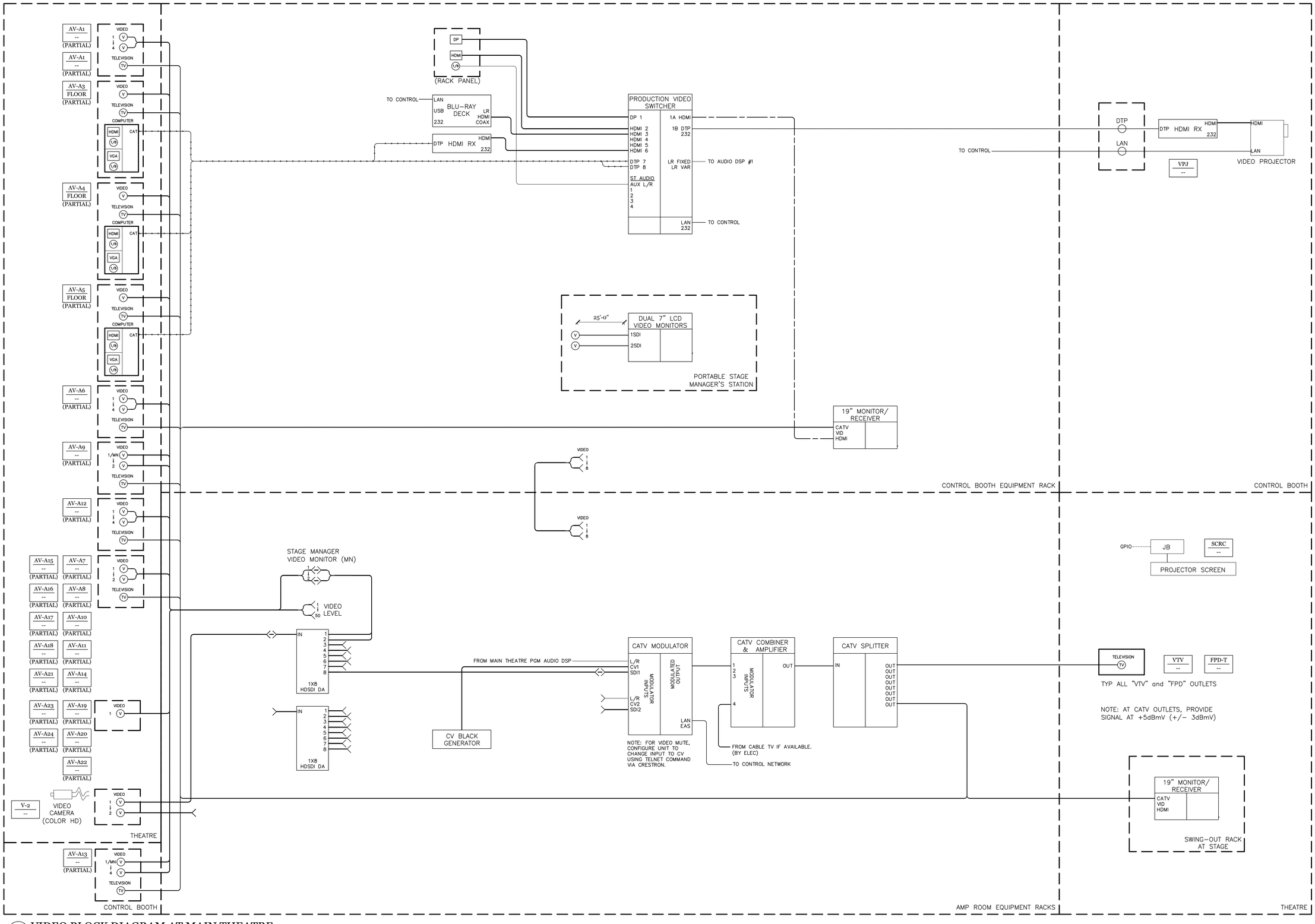

1 VIDEO BLOCK DIAGRAM AT MAIN THEATRE
NTS

QUATTROCCHI KWOK ARCHITECTS
Main Office:
636 Fifth Street, Santa Rosa, CA 95404
Pleasanton Office:
600 Main Street, Suite E,
Pleasanton, CA 94566
(707) 576-0829

LICENSED ARCHITECT
JIM THEISS
LICENSE # C22643
EXP JUNE 30, 2019
STATE OF CALIFORNIA

SIGNED: DECEMBER 14, 2018

The Shalleck Collaborative Inc.
Planning and Design of Theatres | Production Systems | AV
1533 Martin Luther King Jr Way
Berkeley, CA 94709
tel 415-956-1000
www.shalleck.com

FREEDOM HIGH SCHOOL

PERFORMING ARTS AND CTE FACILITIES

1050 NEROLY RD
OAKLEY, CA 94561

LIBERTY UNION HIGH SCHOOL DISTRICT

ARCH PROJECT NO: 1739.00
DRAWN BY:
DRAWING SCALE:
PTN: 61721-0068

BID SET

AUGUST 13, 2019

SHEET TITLE

VIDEO BLOCK DIAGRAM AT THEATRE

SHEET NUMBER

AV-5.11

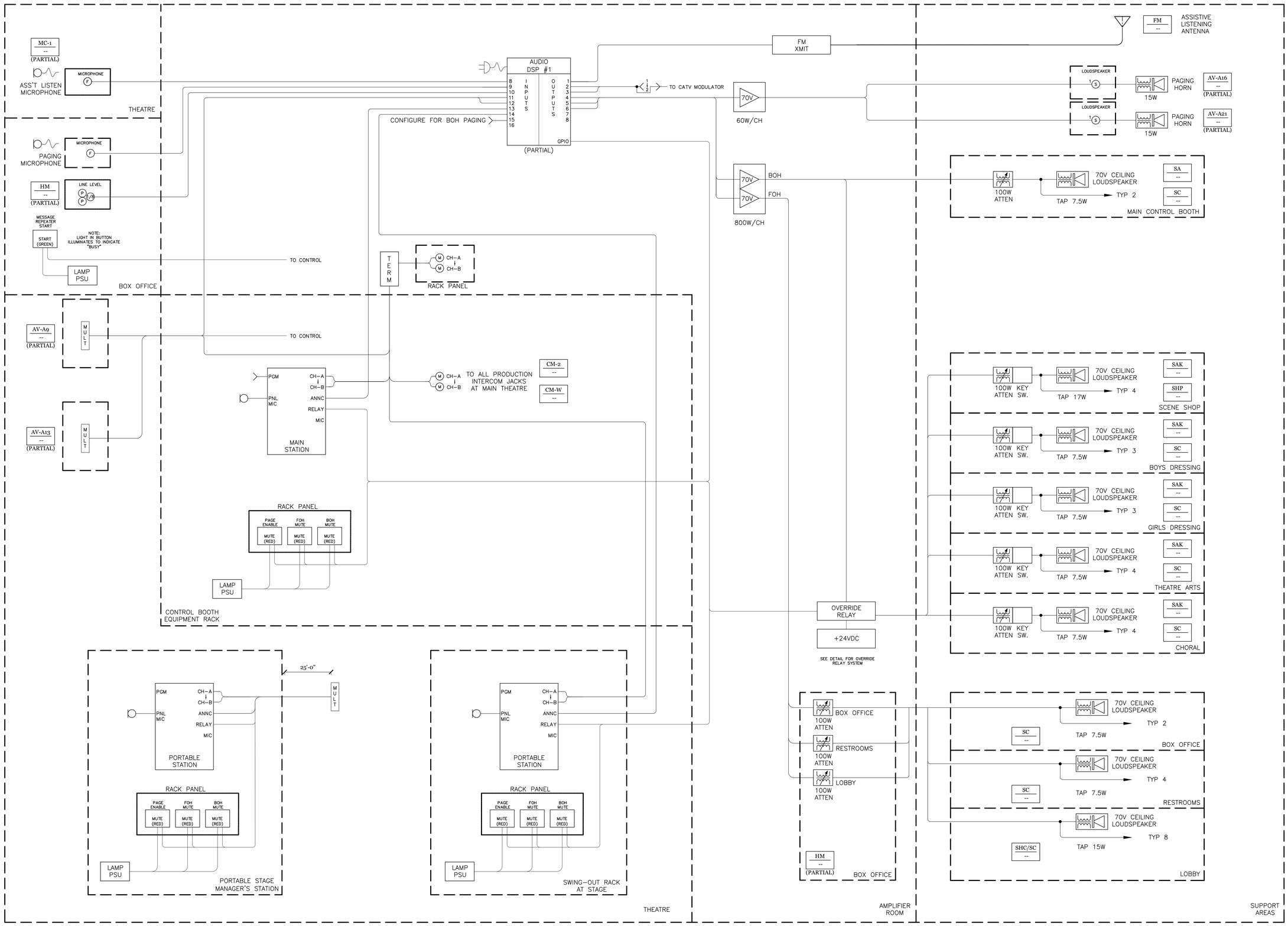

1 PROGRAM/PAGING BLOCK DIAGRAM AT MAIN THEATRE
NTS

QUATTROCCHI KWOK ARCHITECTS
Main Office:
636 Fifth Street, Santa Rosa, CA 95404
Pleasanton Office:
600 Main Street, Suite E,
Pleasanton, CA 94566
(707) 576-0829

LICENSED ARCHITECT
JIM THEISS
LICENSE # C22643
EXP JUNE 30, 2019
STATE OF CALIFORNIA

SIGNED: DECEMBER 14, 2018

The Shalleck Collaborative Inc.
Planning and Design of Theatres | Production Systems | AV
1533 Martin Luther King Jr Way
Berkeley, CA 94709
tel 415-956-1000
www.shalleck.com

FREEDOM HIGH SCHOOL

PERFORMING ARTS AND CTE FACILITIES

1050 NEROLY RD
OAKLEY, CA 94561

LIBERTY UNION HIGH SCHOOL DISTRICT

ARCH PROJECT NO: 1739.00
DRAWN BY:
DRAWING SCALE:
PTN: 61721-0068

BID SET

AUGUST 13, 2019

SHEET TITLE
PROGRAM/ PAGING BLOCK DIAGRAM AT THEATRE

SHEET NUMBER
AV-5.12

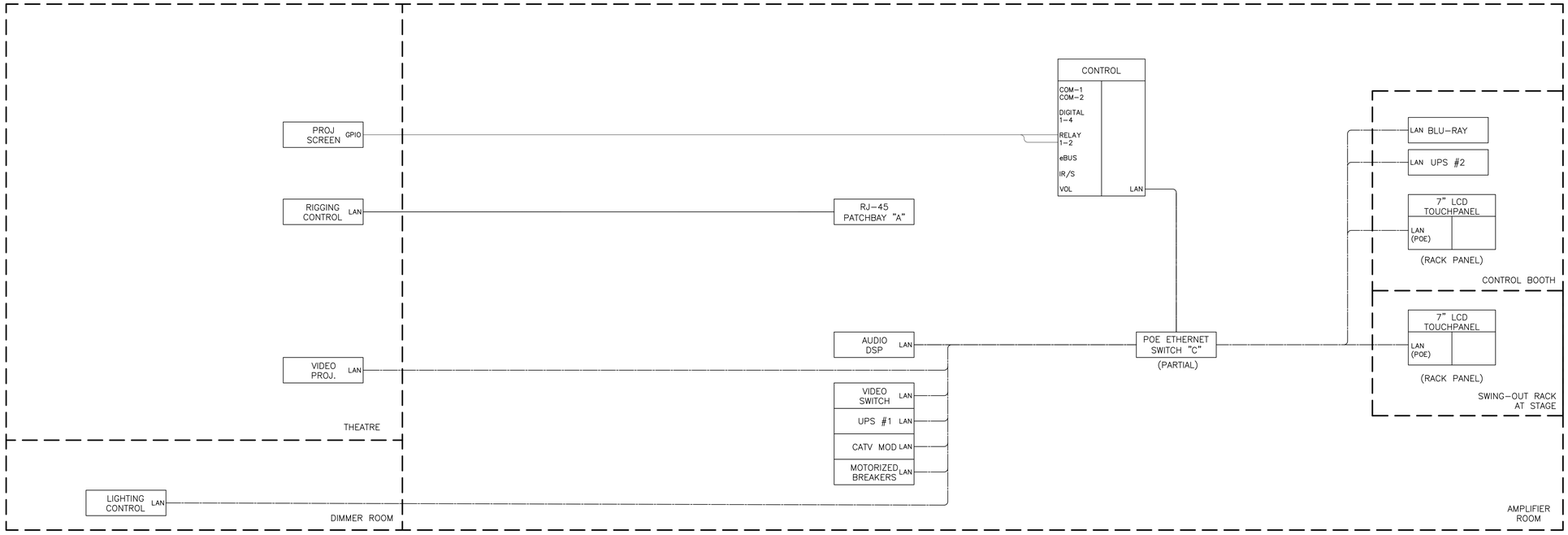

1 CONTROL BLOCK DIAGRAM AT MAIN THEATRE
NTS

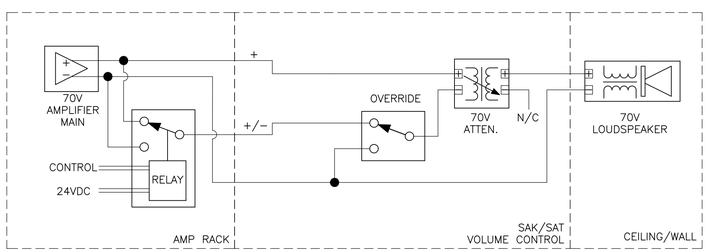

2 OVERRIDE PAGING SCHEMATIC
NTS

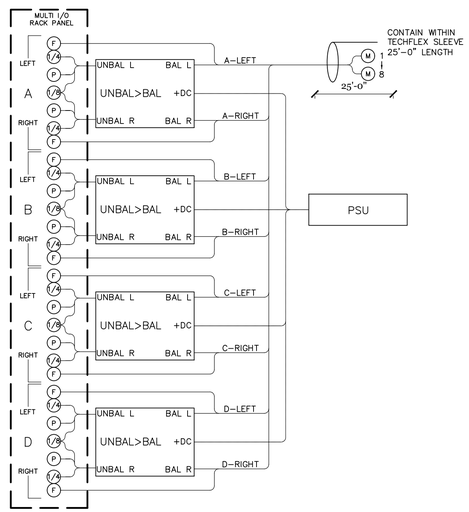

3 MULTI I/O PANEL DIAGRAM
NTS

CABLE LEGEND

LINE TYPE	MANUFACTURER	MODEL	SIGNAL TYPE
	BELDEN	5000UP -or- 5002UP	LOUDSPEAKER, DIRECT COUPLE
	WEST PENN	224	LOUDSPEAKER, 70V
	BELDEN	1700A	CAT-5E
	WEST PENN	356	CRESNET
	BELDEN	9451	MIC/LINE AUDIO
	BELDEN	1505A 7796A 7712A MINI HI-RES	VIDEO
	BELDEN	1505A + 9451 7796A + 9451 7712A + 9451 MINI HI-RES + 9451	VIDEO + STEREO AUDIO
	BELDEN	1422A	RS-232/422
	BELDEN	9740 -OR- 9156	DC VOLTAGE (2 OR 4-COND)
	BELDEN	9913	ANTENNA COAX
	BELDEN	9116 (DROP) 1617A (TRUNK)	CATV COAX
	CRESTRON	DM-CBL-NP	DIGITAL MEDIA
	BELDEN		INTERCOM

SYMBOL LEGEND

SYMBOL	KEY
F	FEMALE XLR CONNECTOR (3P TYP)
M	MALE XLR CONNECTOR (3P TYP)
V	BNC VIDEO CONNECTOR
D	RJ-45 CONNECTOR
S	LOUDSPEAKER CONNECTOR
PA	PHONO CONNECTOR- AUDIO
PV	PHONO CONNECTOR- VIDEO
SV	SVHS CONNECTOR
1/8	1/8" STEREO AUDIO CONNECTOR
1/4	1/4" STEREO AUDIO CONNECTOR
TV	CATV CONNECTOR
HD15	HD-15 RGBHV VIDEO CONNECTOR
	PATCHPOINT
	NORMALLED PATCH
	HALF-NORMALLED PATCH
OFCI	OWNER FURNISHED, CONTRACTOR INSTALLED
	SUBSCRIPT # INDICATES PIN QTY (XLR ONLY)
	FLEXIBLE CABLE
HDMI	HDMI CONNECTOR
DVI	DVI VIDEO CONNECTOR

4 LEGENDS
NTS

QUATTROCCHI KWOK ARCHITECTS
Main Office:
636 Fifth Street, Santa Rosa, CA 95404
Pleasanton Office:
600 Main Street, Suite E,
Pleasanton, CA 94566
(707) 576-0829

LICENSED ARCHITECT
JIM THEISS
LICENSE # C22643
EXP JUNE 30, 2019
STATE OF CALIFORNIA

SIGNED: DECEMBER 14, 2018

The Shalleck Collaborative Inc.
Planning and Design of Theatres | Production Systems | AV
1533 Martin Luther King Jr Way
Berkeley, CA 94709
tel 415-956-1000
www.shalleck.com

FREEDOM HIGH SCHOOL

PERFORMING ARTS AND CTE FACILITIES

1050 NEROLY RD
OAKLEY, CA 94561

LIBERTY UNION HIGH SCHOOL DISTRICT

ARCH PROJECT NO: 1739.00
DRAWN BY:
DRAWING SCALE:
PTN: 61721-0068

BID SET

AUGUST 13, 2019

SHEET TITLE

CONTROL BLOCK DIAGRAM AT THEATRE

SHEET NUMBER

AV-5.13

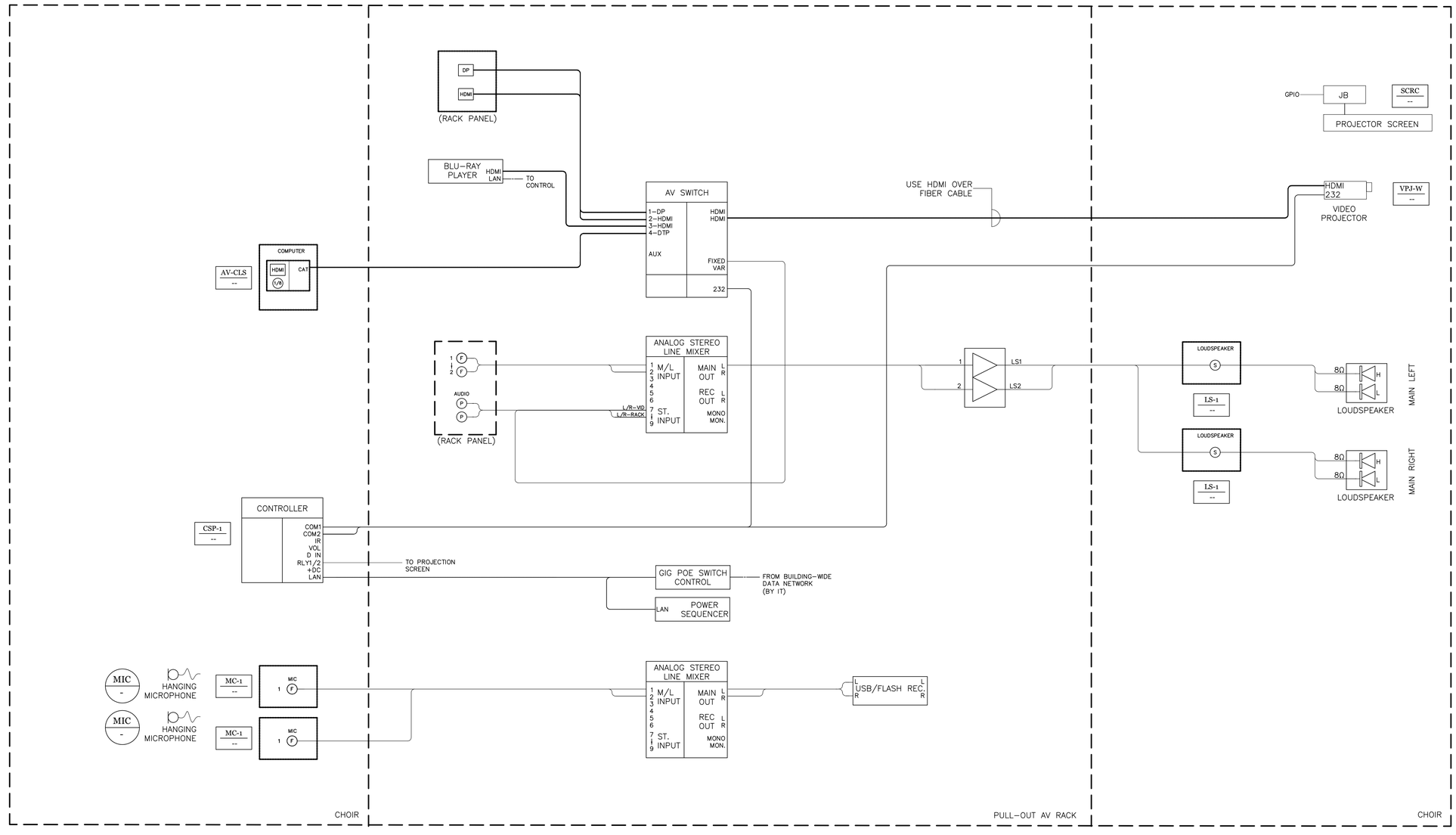

1 AV BLOCK DIAGRAM AT CHORAL ROOM
NTS

QUATTROCCHI KWOK ARCHITECTS
Main Office:
636 Fifth Street, Santa Rosa, CA 95404
Pleasanton Office:
600 Main Street, Suite E,
Pleasanton, CA 94566
(707) 576-0829

LICENSED ARCHITECT
JIM THEISS
LICENSE # C22643
EXP JUNE 30, 2019
STATE OF CALIFORNIA

SIGNED: DECEMBER 14, 2018

The Shalleck Collaborative Inc.
Planning and Design of Theatres | Production Systems | AV
1533 Martin Luther King Jr Way
Berkeley, CA 94709
tel 415-956-0200
www.shalleck.com

FREEDOM HIGH SCHOOL

PERFORMING ARTS AND CTE FACILITIES

1050 NEROLY RD
OAKLEY, CA 94561

LIBERTY UNION HIGH SCHOOL DISTRICT

ARCH PROJECT NO: 1739.00
DRAWN BY:
DRAWING SCALE:
PTN: 61721-0068

BID SET

AUGUST 13, 2019

SHEET TITLE

AV BLOCK DIAGRAM AT CHORAL

SHEET NUMBER

AV-5.20

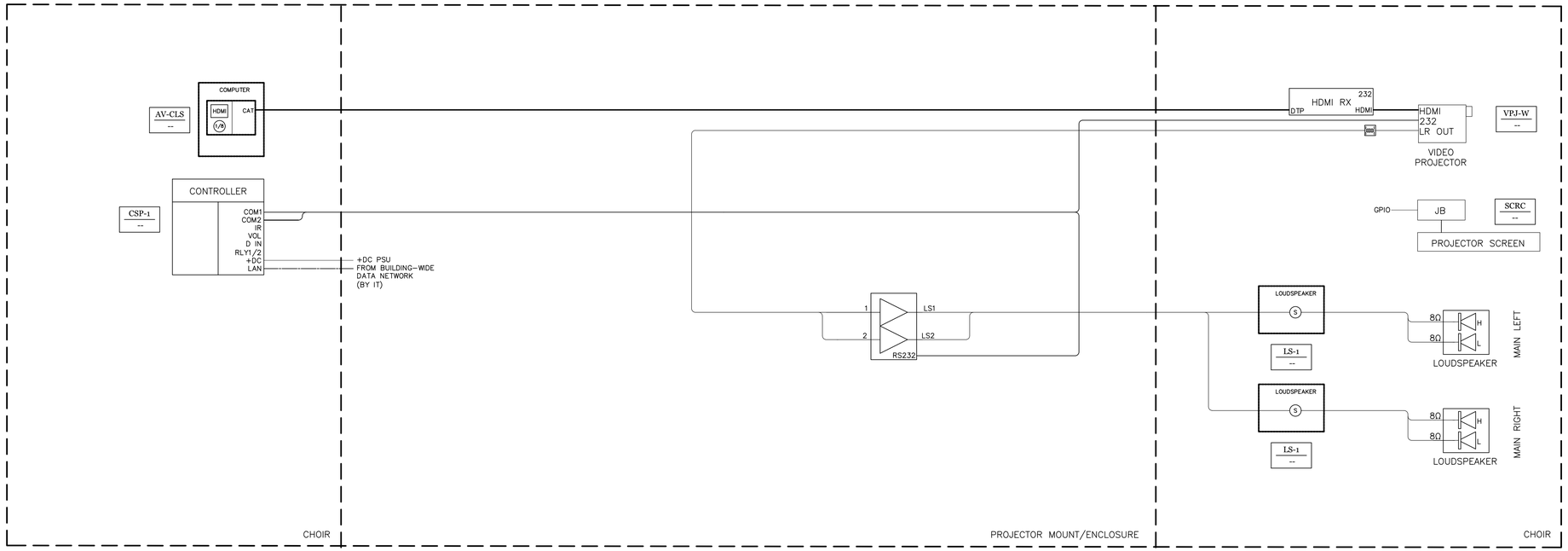

1 AV BLOCK DIAGRAM AT CLASSROOMS
NTS

QUATTROCCHI KWOK ARCHITECTS
Main Office:
636 Fifth Street, Santa Rosa, CA 95404
Pleasanton Office:
600 Main Street, Suite E,
Pleasanton, CA 94566
(707) 576-0829

LICENSED ARCHITECT
JIM THEISS
LICENSE # C22643
EXP JUNE 30, 2019
STATE OF CALIFORNIA

SIGNED: DECEMBER 14, 2018

The Shalleck Collaborative Inc.
Planning and Design of Theatres | Production Systems | AV
1533 Martin Luther King Jr Way
Berkeley, CA 94709
tel 415-956-1000
www.shalleck.com

FREEDOM HIGH SCHOOL

PERFORMING ARTS AND CTE FACILITIES

1050 NEROLY RD
OAKLEY, CA 94561

LIBERTY UNION HIGH SCHOOL DISTRICT

ARCH PROJECT NO: 1739.00
DRAWN BY:
DRAWING SCALE:
PTN: 61721-0068

BID SET

AUGUST 13, 2019

SHEET TITLE

AV BLOCK DIAGRAM AT CLASS

SHEET NUMBER

AV-5.21

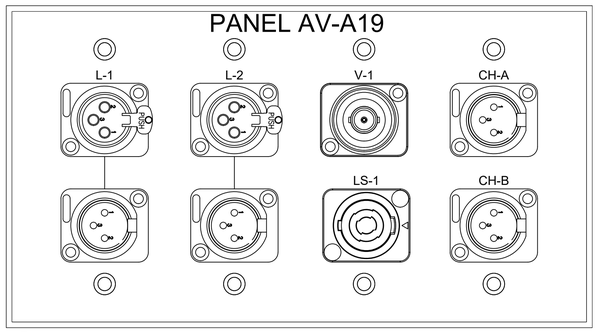

1 AV PANEL AV-A19,20,22,23,24
12"=1'-0" THIS DEVICE WEIGHS LESS THAN 20 LBS.



2 AV PANEL WX
12"=1'-0" THIS DEVICE WEIGHS LESS THAN 20 LBS.



3 AV PANEL FM
12"=1'-0" THIS DEVICE WEIGHS LESS THAN 20 LBS.

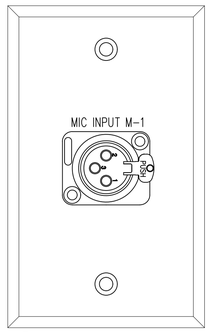

4 AV PANEL MC-1
12"=1'-0" THIS DEVICE WEIGHS LESS THAN 20 LBS.

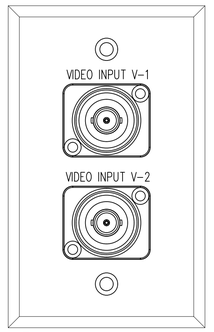

5 AV PANEL V-2
12"=1'-0" THIS DEVICE WEIGHS LESS THAN 20 LBS.

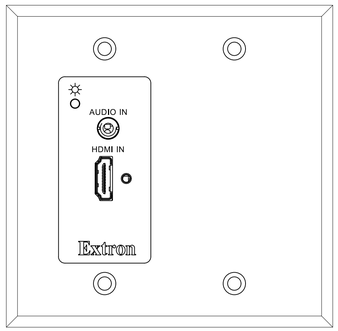

6 AV PANEL AV-CLS
12"=1'-0" THIS DEVICE WEIGHS LESS THAN 20 LBS.

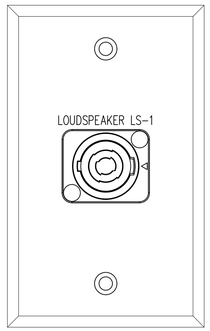

7 AV PANEL LS-1
12"=1'-0" THIS DEVICE WEIGHS LESS THAN 20 LBS.

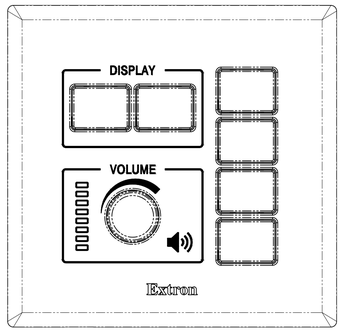

8 AV PANEL CSP-1
12"=1'-0" THIS DEVICE WEIGHS LESS THAN 20 LBS.

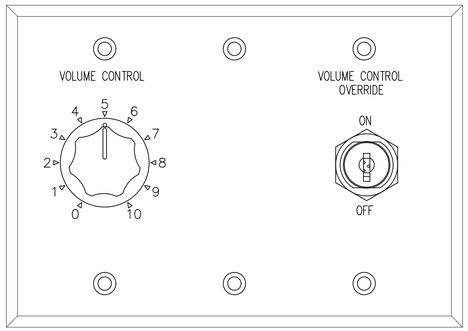

9 AV PANEL SAK
12"=1'-0" THIS DEVICE WEIGHS LESS THAN 20 LBS.

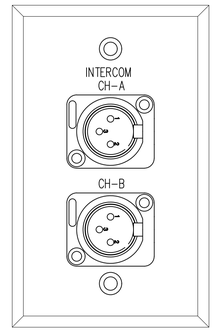

10 AV PANEL CM-2
12"=1'-0" THIS DEVICE WEIGHS LESS THAN 20 LBS.

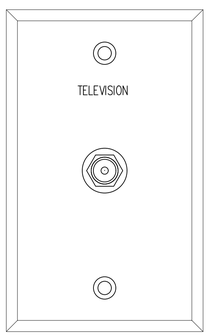

11 AV PANEL VTV
12"=1'-0" THIS DEVICE WEIGHS LESS THAN 20 LBS.

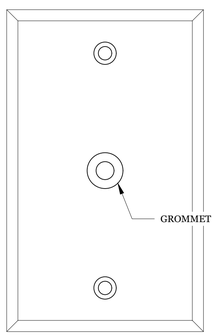

12 AV PANEL LS-1A
12"=1'-0" THIS DEVICE WEIGHS LESS THAN 20 LBS.

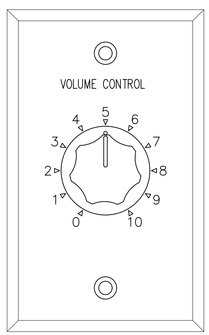

13 AV PANEL SA
12"=1'-0" THIS DEVICE WEIGHS LESS THAN 20 LBS.

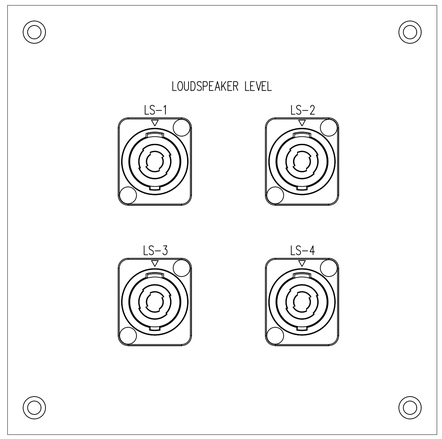

14 AV PANEL LS-ARY
12"=1'-0" THIS DEVICE WEIGHS LESS THAN 20 LBS.

GENERAL NOTES

1. ALL AC OUTLETS, CONDUIT & BACKBOXES BY ELEC.
2. REQUIRED STRUCTURAL BACKING BY ARCH.
3. AV CONTRACTOR TO COORDINATE WITH ELEC TO DETERMINE EXACT LOCATION OF AV BACKBOXES.

QUATTROCCHI KWOK ARCHITECTS
Main Office:
636 Fifth Street, Santa Rosa, CA 95404
Pleasanton Office:
600 Main Street, Suite E,
Pleasanton, CA 94566
(707) 576-0829

LICENSED ARCHITECT
JIM THEISS
LICENSE # C22643
EXP JUNE 30, 2019
STATE OF CALIFORNIA

SIGNED: DECEMBER 14, 2018

The Shalleck Collaborative Inc.
Planning and Design of Theatres | Production Systems | AV
1533 Martin Luther King Jr Way
Berkeley, CA 94709
tel 415-956-0200
www.shalleck.com

FREEDOM HIGH SCHOOL

PERFORMING ARTS AND CTE FACILITIES

1050 NEROLY RD
OAKLEY, CA 94561

LIBERTY UNION HIGH SCHOOL DISTRICT

ARCH PROJECT NO: 1739.00
DRAWN BY:
DRAWING SCALE:
PTN: 61721-0068

BID SET

AUGUST 13, 2019

SHEET TITLE

AV PANEL ELEVATIONS

SHEET NUMBER

AV-7.01

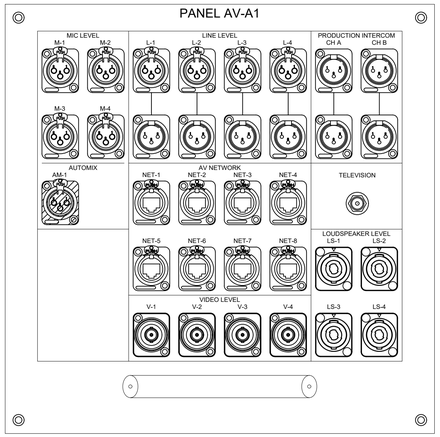

1 AV PANEL AV-A1,2
6"=1'-0"

THIS DEVICE WEIGHS LESS THAN 20 LBS.

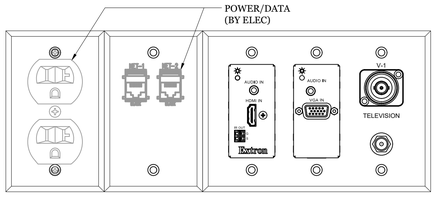

NOTE: THESE PANELS ARE INSERTS FOR FSR FLOOR POCKET FL-640P-6

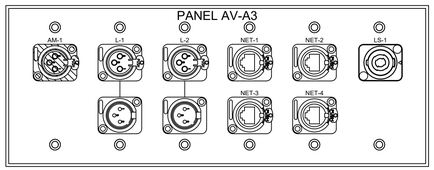

2 AV PANEL AV-A3,4,5
6"=1'-0"

THIS DEVICE WEIGHS LESS THAN 20 LBS.

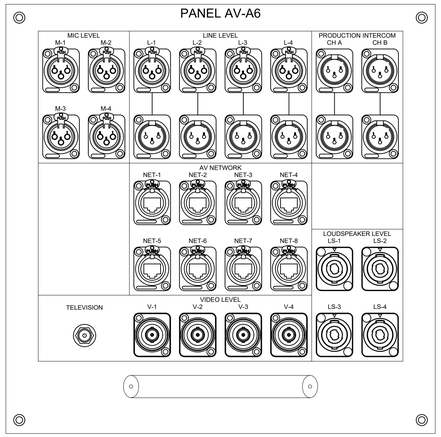

3 AV PANEL AV-A6
6"=1'-0"

THIS DEVICE WEIGHS LESS THAN 20 LBS.

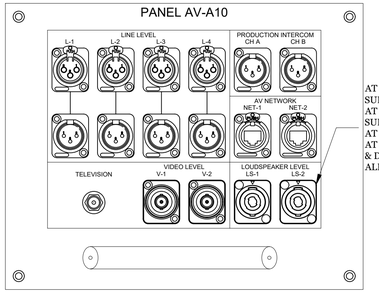

4 AV PANEL AV-A7,8,10,11,14,15,16,17,18,21
6"=1'-0"

THIS DEVICE WEIGHS LESS THAN 20 LBS.

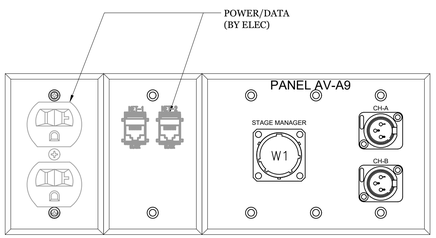

NOTE: THESE PANELS ARE INSERTS FOR FSR FLOOR POCKET FL-600P-6

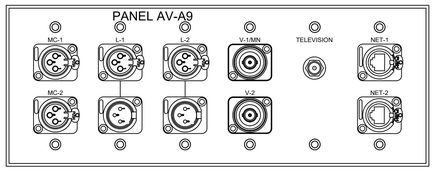

5 AV PANEL AV-A9
6"=1'-0"

THIS DEVICE WEIGHS LESS THAN 20 LBS.

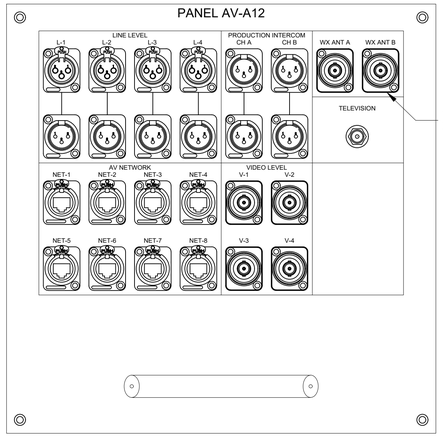

USE 50-OHM
ISOLATED BNC

6 AV PANEL AV-A12
6"=1'-0"

THIS DEVICE WEIGHS LESS THAN 20 LBS.

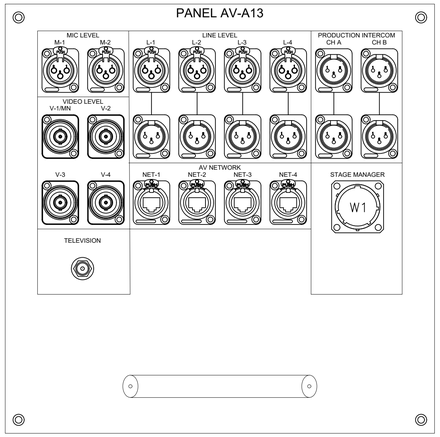

7 AV PANEL AV-A13
6"=1'-0"

THIS DEVICE WEIGHS LESS THAN 20 LBS.

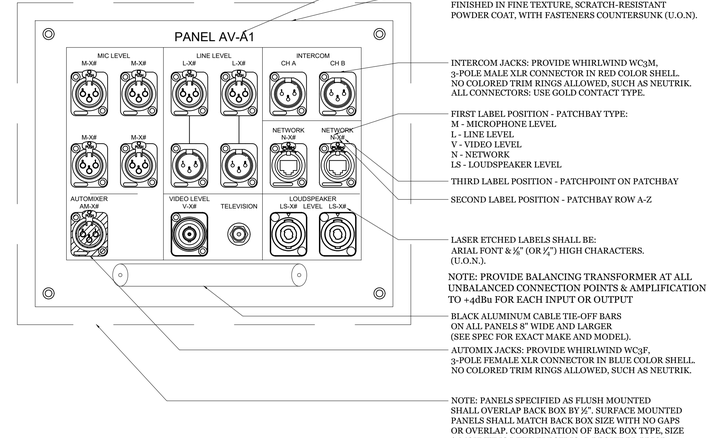

8 TYPICAL AV MULTI I/O PANEL
NTS

THIS DEVICE WEIGHS LESS THAN 20 LBS.

GENERAL NOTES

1. ALL AC OUTLETS, CONDUIT & BACKBOXES BY ELEC.
2. REQUIRED STRUCTURAL BACKING BY ARCH.
3. AV CONTRACTOR TO COORDINATE WITH ELEC TO DETERMINE EXACT LOCATION OF AV BACKBOXES.

QUATTROCCHI KWOK ARCHITECTS
Main Office:
636 Fifth Street, Santa Rosa, CA 95404
Pleasanton Office:
600 Main Street, Suite E,
Pleasanton, CA 94566
(707) 576-0829

LICENSED ARCHITECT
JIM THEISS
LICENSE # C22643
EXP JUNE 30, 2019
STATE OF CALIFORNIA

SIGNED: DECEMBER 14, 2018

The Shalleck Collaborative Inc.
Planning and Design of Theatres | Production Systems | AV
1533 Martin Luther King Jr Way
Berkeley, CA 94709
tel 415-956-1000
www.shalleck.com

FREEDOM HIGH SCHOOL

PERFORMING ARTS AND CTE FACILITIES

1050 NEROLY RD
OAKLEY, CA 94561

LIBERTY UNION HIGH SCHOOL DISTRICT

ARCH PROJECT NO: 1739.00
DRAWN BY:
DRAWING SCALE:
PTN: 61721-0068

BID SET

AUGUST 13, 2019

SHEET TITLE

AV PANEL ELEVATIONS

SHEET NUMBER

AV-7.02

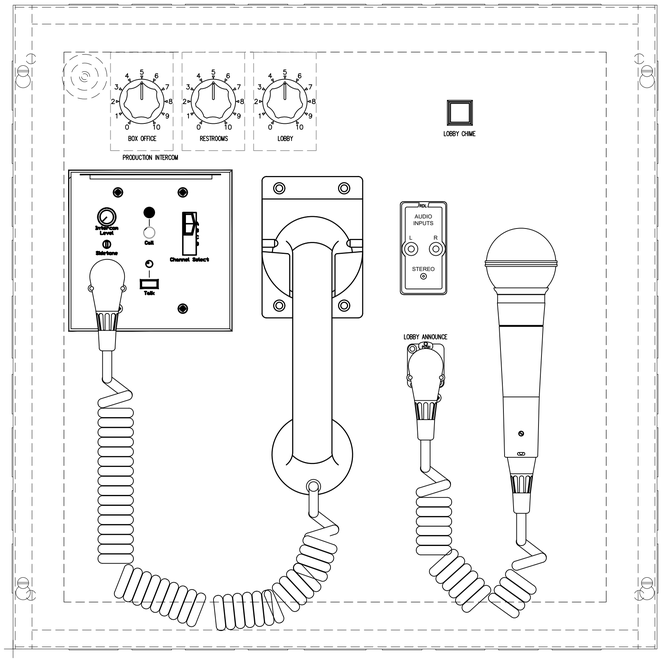

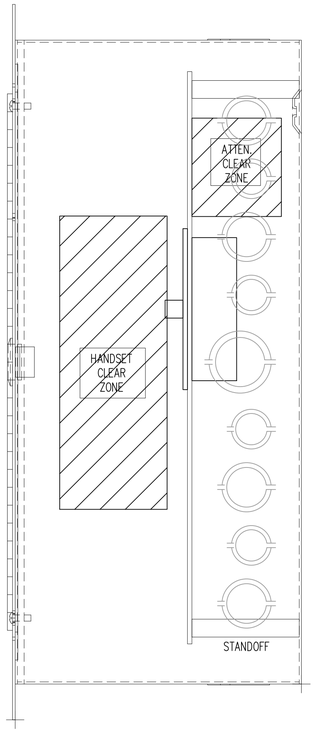

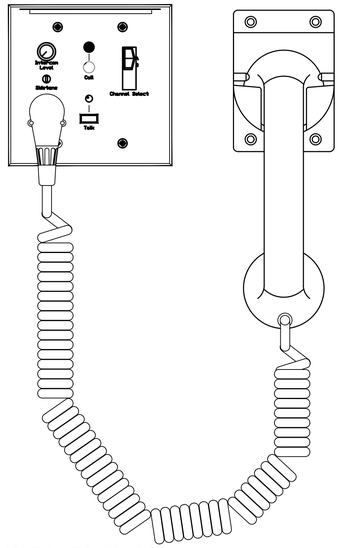

1 AV PANEL HM

6"=1'-0"

THIS DEVICE WEIGHS LESS THAN 20 LBS.

NOTES:
- USE PAPER LEGENDS. PROVIDE COMPUTER FILE TO USER FOR FUTURE MODIFICATIONS.
- DENOTE NORMALS WITH HORIZONTAL LINE ABOVE & BELOW AT LEGEND (AS SHOWN ABOVE).
- SEE SPECIFICATIONS FOR FURTHER INFO ON TERMINATION, GROUNDING, ETC.
- NUMBER SIGNAL TYPES SEQUENTIALLY. FIELD PLATE LEGENDS SHALL EXACTLY MATCH PATCHBAY.

5 TYPICAL MIC / LINE PATCHBAY

6"=1'-0"

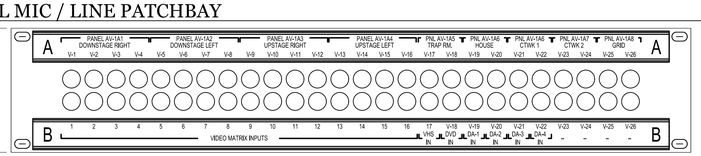

THIS DEVICE WEIGHS LESS THAN 20 LBS.

NOTES:
- USE PAPER LEGENDS. PROVIDE COMPUTER FILE TO USER FOR FUTURE MODIFICATIONS.
- DENOTE NORMALS WITH HORIZONTAL LINE ABOVE & BELOW AT LEGEND (AS SHOWN ABOVE).
- SEE SPECIFICATIONS FOR FURTHER INFO ON TERMINATION, GROUNDING, ETC.
- NUMBER SIGNAL TYPES SEQUENTIALLY. FIELD PLATE LEGENDS SHALL EXACTLY MATCH PATCHBAY.

7 TYPICAL VIDEO PATCHBAY

6"=1'-0"

THIS DEVICE WEIGHS LESS THAN 20 LBS.

9 NOT USED



THIS DEVICE WEIGHS LESS THAN 20 LBS.

11 CUSTOM PAGING BUTTON RACK PANEL

6"=1'-0"

THIS DEVICE WEIGHS LESS THAN 20 LBS.

2 AV PANEL CM-W

6"=1'-0"

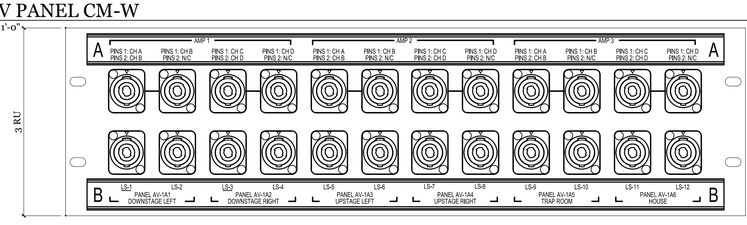

THIS DEVICE WEIGHS LESS THAN 20 LBS.

NOTES:
- USE PAPER LEGENDS. PROVIDE COMPUTER FILE TO USER FOR FUTURE MODIFICATIONS.
- DENOTE NORMALS WITH HORIZONTAL LINE ABOVE & BELOW AT LEGEND (AS SHOWN ABOVE).
- SEE SPECIFICATIONS FOR FURTHER INFO ON TERMINATION, GROUNDING, ETC.

3 TYPICAL LOUDSPEAKER PATCHBAY

6"=1'-0"

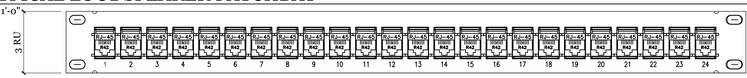

THIS DEVICE WEIGHS LESS THAN 20 LBS.

NOTES:
- SEE SPECIFICATIONS FOR FURTHER INFO ON TERMINATION, GROUNDING, ETC.
- NUMBER SIGNAL TYPES SEQUENTIALLY. FIELD PLATE LEGENDS SHALL EXACTLY MATCH PATCHBAY.

4 TYPICAL NETWORK PATCHBAY

6"=1'-0"

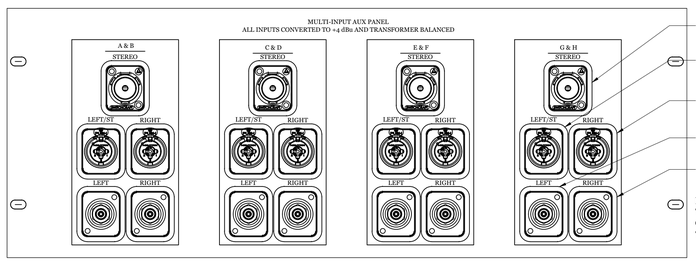

THIS DEVICE WEIGHS LESS THAN 20 LBS.

SWITCHCRAFT EH35MMSSCB JACK
WITH NEUTRIK SCDP-9 (WHITE) GASKET
NEUTRIK NCJ5FI-V JACK
WITH ACE BACKSTAGE C-25137 PLATE &
NEUTRIK SCDP-9 (WHITE) GASKET (WIRED AS STEREO TRS)
NEUTRIK NCJ5FI-V JACK
WITH ACE BACKSTAGE C-25137 PLATE &
NEUTRIK SCDP-2 (RED) GASKET

NEUTRIK NF2D-B-9 JACK
WITH NEUTRIK SCDP-9 (WHITE) GASKET

NEUTRIK NF2D-B-2 JACK
WITH NEUTRIK SCDP-2 (RED) GASKET

NOTE: PROVIDE BALANCING TRANSFORMER AT ALL UNBALANCED CONNECTION POINTS & AMPLIFICATION TO +4dBu FOR EACH INPUT OR OUTPUT

6 OUTBOARD EQUIPMENT RACK PANEL

6"=1'-0"



THIS DEVICE WEIGHS LESS THAN 20 LBS.

8 WIRELESS MICROPHONE ANTENNA OUTPUT RACK PANEL

6"=1'-0"

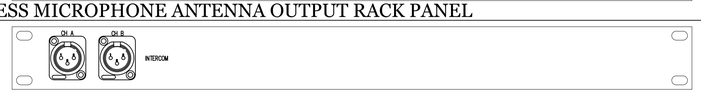

THIS DEVICE WEIGHS LESS THAN 20 LBS.

10 PRODUCTION INTERCOM RACK PANEL

6"=1'-0"

THIS DEVICE WEIGHS LESS THAN 20 LBS.

GENERAL NOTES

1. ALL AC OUTLETS, CONDUIT & BACKBOXES BY ELEC.
2. REQUIRED STRUCTURAL BACKING BY ARCH.
3. AV CONTRACTOR TO COORDINATE WITH ELEC TO DETERMINE EXACT LOCATION OF AV BACKBOXES.

QUATTROCCHI KWOK ARCHITECTS
Main Office:
636 Fifth Street, Santa Rosa, CA 95404
Pleasanton Office:
600 Main Street, Suite E,
Pleasanton, CA 94566
(707) 576-0829

LICENSED ARCHITECT
JIM THEISS
LICENSE # C22643
EXP JUNE 30, 2019
STATE OF CALIFORNIA

SIGNED: DECEMBER 14, 2018

The Shalleck Collaborative Inc.
Planning and Design of Theatres | Production Systems | AV
1533 Martin Luther King Jr Way
Berkeley, CA 94709
tel 415-956-0200
www.shalleck.com

FREEDOM HIGH SCHOOL

PERFORMING ARTS AND CTE FACILITIES

1050 NEROLY RD
OAKLEY, CA 94561

LIBERTY UNION HIGH SCHOOL DISTRICT

ARCH PROJECT NO: 1739.00
DRAWN BY:
DRAWING SCALE:
PTN: 61721-0068

BID SET

AUGUST 13, 2019

SHEET TITLE

AV PANEL ELEVATIONS

SHEET NUMBER

AV-7.03

SWING-OUT AV RACK					
LOCATION	MODEL	A OVERALL HEIGHT	B OVERALL WIDTH	C OVERALL DEPTH	D MOUNTING LOCATION
THEATER AUDIO PORCH	SR-46-28	101.25"	23.56"	28.34"	90.56"
THEATER STAGE	SR-46-28	101.25"	23.56"	28.34"	90.56"

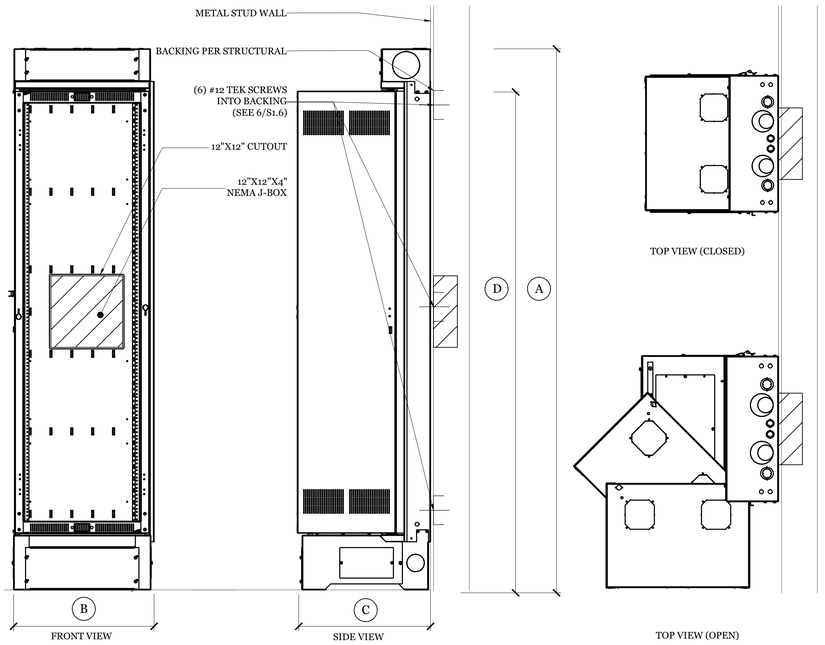

FIXED AV RACK				
LOCATION	MODEL	A OVERALL HEIGHT	B OVERALL WIDTH	C OVERALL DEPTH
MUSIC CLASSROOM	5-14-26	28.25"	19.125"	25.98"

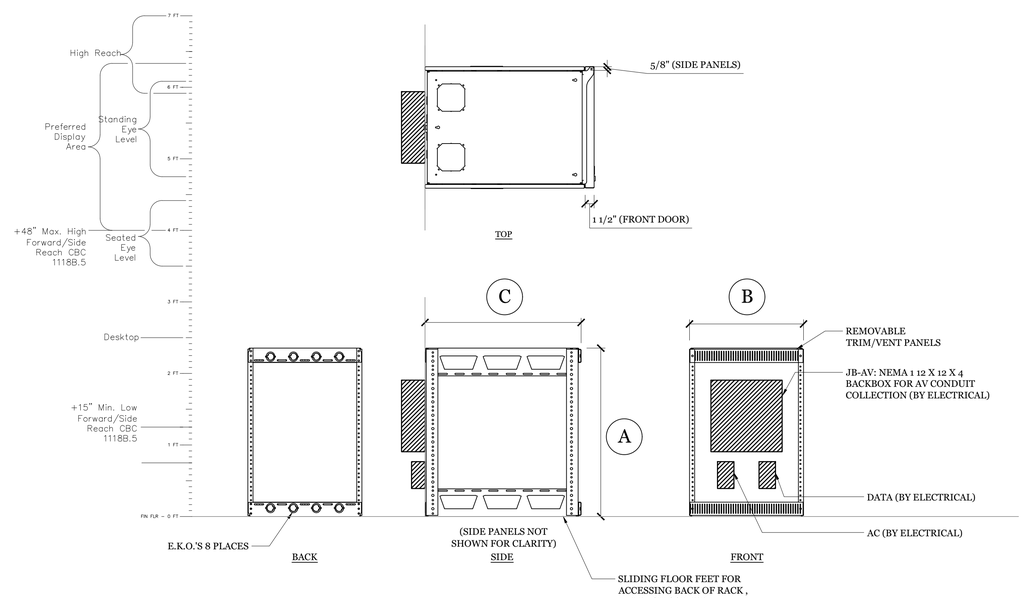

1 SR SWING-OUT EQUIPMENT RACK MOUNTING
1"=1'-0"

EMPTY WEIGHT: 270 LBS
EQUIPMENT WEIGHT: 230 LBS
TOTAL MAX WEIGHT: 500 LBS

2 SLIM-5 EQUIPMENT RACK MOUNTING
1"=1'-0"

EMPTY WEIGHT: 50 LBS
EQUIPMENT WEIGHT: 150 LBS
TOTAL MAX WEIGHT: 200 LBS

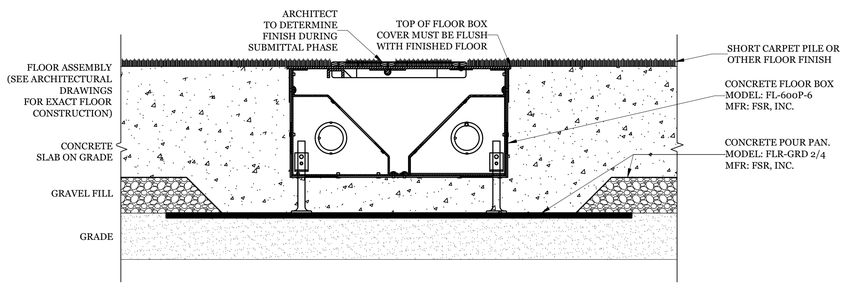

3 FLOOR BOX AV-A9 MOUNTING
3"=1'-0"

THIS DEVICE WEIGHS LESS THAN 20 LBS.

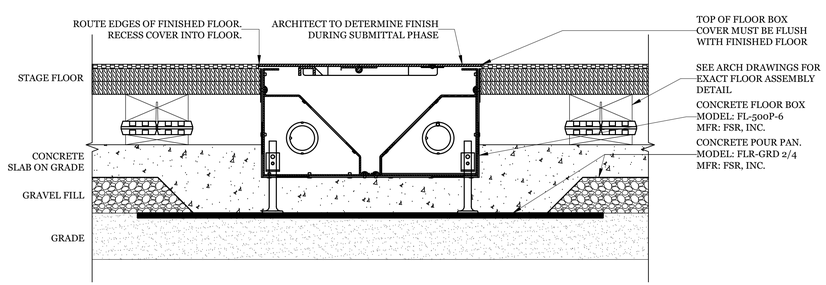

4 FLOOR BOXES AT STAGE MOUNTING
3"=1'-0"

EMPTY WEIGHT: 50 LBS
EQUIPMENT WEIGHT: 350 LBS
TOTAL MAX WEIGHT: 400 LBS

GENERAL NOTES

1. ALL AC OUTLETS, CONDUIT & BACKBOXES BY ELEC.
2. REQUIRED STRUCTURAL BACKING BY ARCH.
3. AV CONTRACTOR TO COORDINATE WITH ELEC TO DETERMINE EXACT LOCATION OF AV BACKBOXES.

QUATTROCCHI KWOK ARCHITECTS
Main Office:
636 Fifth Street, Santa Rosa, CA 95404
Pleasanton Office:
600 Main Street, Suite E,
Pleasanton, CA 94566
(707) 576-0829

LICENSED ARCHITECT
JIM THEISS
LICENSE # C22643
EXP JUNE 30, 2019
STATE OF CALIFORNIA

SIGNED: DECEMBER 14, 2018

The Shalleck Collaborative Inc.
Planning and Design of Theatres | Production Systems | AV
1533 Martin Luther King Jr Way
Berkeley, CA 94709
tel 415-956-0200
www.shalleck.com

FREEDOM HIGH SCHOOL

PERFORMING ARTS AND CTE FACILITIES

1050 NEROLY RD
OAKLEY, CA 94561

LIBERTY UNION HIGH SCHOOL DISTRICT

ARCH PROJECT NO: 1739.00
DRAWN BY:
DRAWING SCALE:
PTN: 61721-0068

BID SET

AUGUST 13, 2019

SHEET TITLE

AV MOUNTING DETAILS

SHEET NUMBER

AV-7.10

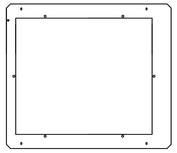

TOP VIEW

FIXED AV RACKS				
LOCATION	MODEL	A OVERALL HEIGHT	B OVERALL WIDTH	C OVERALL DEPTH
AMP ROOM	WRK-44-32	83.13"	24.25"	32.6"

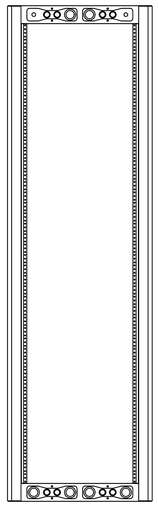

REAR VIEW

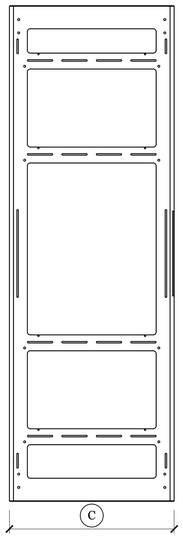

SIDE VIEW
(PANELS OMITTED FOR CLARITY)

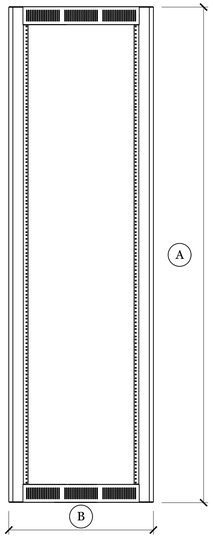

FRONT VIEW

WHEN MOUNTED AS SHOWN WITH AN ENGINEERED ANCHORAGE, THE BASE ANCHORAGE IS DESIGNED TO COMPLY WITH CBC'S SEISMIC REQUIREMENTS IN ZONE Z4. REFER TO RACK MFG FOR RACK CERTIFICATION.

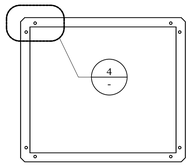

FLOOR MOUNTING LOCATIONS

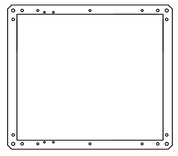

BOTTOM VIEW

1 WRK EQUIPMENT RACK MOUNTING
1"=1'-0"

EMPTY WEIGHT: 230 LBS
EQUIPMENT WEIGHT: 670 LBS
TOTAL MAX WEIGHT: 900 LBS

WHEN MOUNTED AS SHOWN WITH AN ENGINEERED ANCHORAGE, THE BASE ANCHORAGE IS DESIGNED TO COMPLY WITH CBC'S SEISMIC REQUIREMENTS IN ZONE Z4 OR SEISMIC DESIGN CATEGORY (SDC) "D". REFER TO RACK MFG FOR RACK CERTIFICATION.

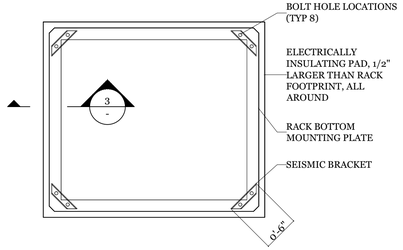

2 WRK BASEPLATE DETAIL
1"=1'-0"

WHEN MOUNTED AS SHOWN WITH AN ENGINEERED ANCHORAGE, THE BASE ANCHORAGE IS DESIGNED TO COMPLY WITH CBC'S SEISMIC REQUIREMENTS IN ZONE Z4 OR SEISMIC DESIGN CATEGORY (SDC) "D". REFER TO RACK MFG FOR RACK CERTIFICATION.

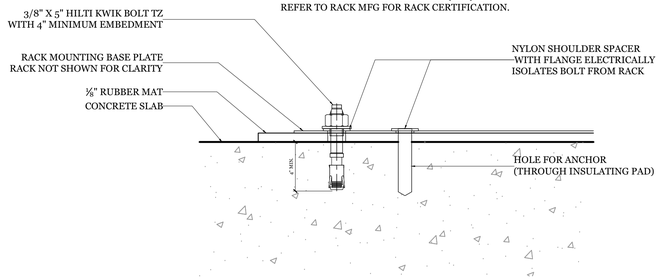

3 RACK ANCHORAGE DETAIL
6"=1'-0"

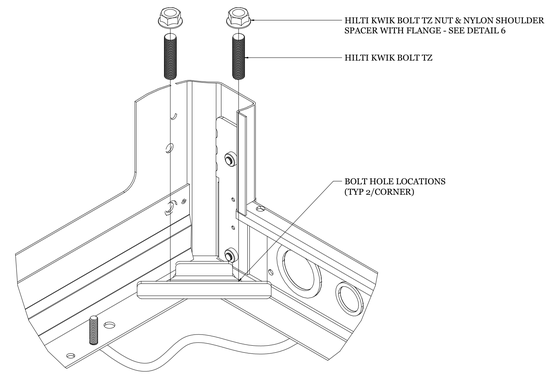

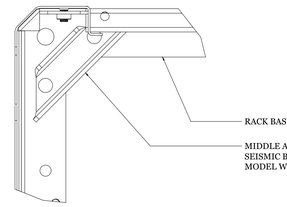

4 WRK SEISMIC BRACKET DETAIL
6"=1'-0"

A: SIDE VIEW

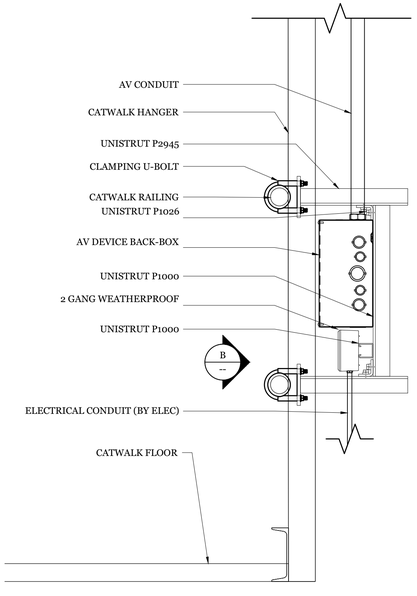

B: FRONT VIEW

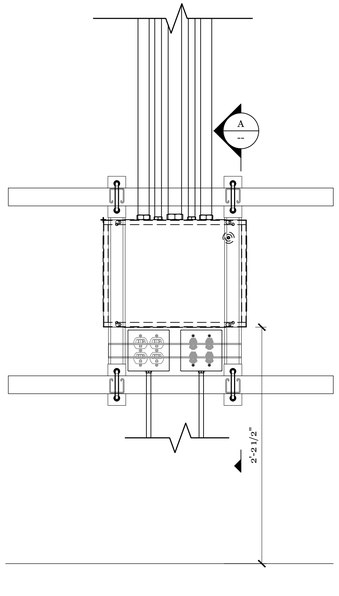

5 TYPICAL DEVICE MOUNTING AT CATWALK
1-1/2"=1'-0"

THIS DEVICE WEIGHS LESS THAN 20 LBS.

A: SIDE VIEW

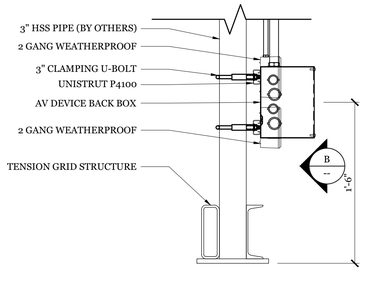

B: FRONT VIEW

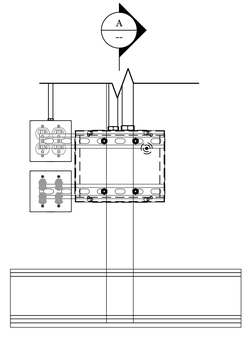

6 TYPICAL DEVICE MOUNTING AT TENSION GRID
1-1/2"=1'-0"

THIS DEVICE WEIGHS LESS THAN 20 LBS.

GENERAL NOTES

1. ALL AC OUTLETS, CONDUIT & BACKBOXES BY ELEC.
2. REQUIRED STRUCTURAL BACKING BY ARCH.
3. AV CONTRACTOR TO COORDINATE WITH ELEC TO DETERMINE EXACT LOCATION OF AV BACKBOXES.

QUATTROCCHI KWOK ARCHITECTS
Main Office:
636 Fifth Street, Santa Rosa, CA 95404
Pleasanton Office:
600 Main Street, Suite E,
Pleasanton, CA 94566
(707) 576-0829

LICENSED ARCHITECT
JIM THEISS
LICENSE # C22643
EXP JUNE 30, 2019
STATE OF CALIFORNIA

SIGNED: DECEMBER 14, 2018

The Shalleck Collaborative Inc.
Planning and Design of Theatres | Production Systems | AV
1533 Martin Luther King Jr Way
Berkeley, CA 94709
tel 415-956-1000
www.shalleck.com

FREEDOM HIGH SCHOOL

PERFORMING ARTS AND CTE FACILITIES

1050 NEROLY RD
OAKLEY, CA 94561

LIBERTY UNION HIGH SCHOOL DISTRICT

ARCH PROJECT NO:	1739.00
DRAWN BY:	
DRAWING SCALE:	
PTN:	61721-0068

BID SET

AUGUST 13, 2019

SHEET TITLE

AV MOUNTING DETAILS

SHEET NUMBER

AV-7.11

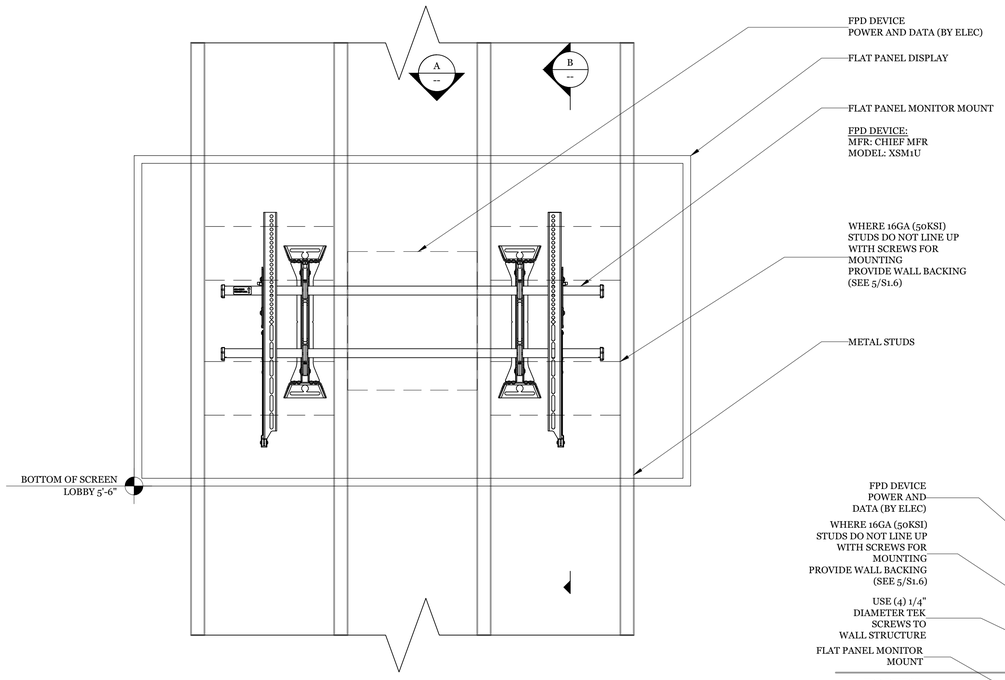

VIEW C: ELEVATION

FPD DEVICE
POWER AND DATA (BY ELEC)

FLAT PANEL DISPLAY

FLAT PANEL MONITOR MOUNT

FPD DEVICE:
MFR: CHIEF MFR
MODEL: XSM1U

WHERE 16GA (50KSI)
STUDS DO NOT LINE UP
WITH SCREWS FOR
MOUNTING
PROVIDE WALL BACKING
(SEE 5/S1.6)

METAL STUDS

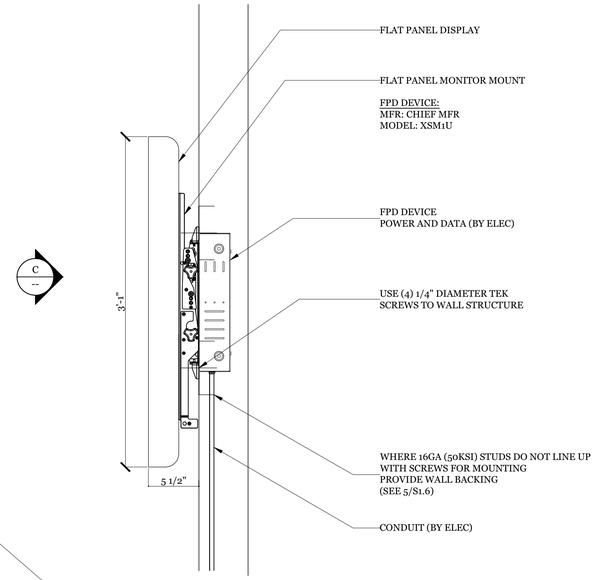

VIEW B: SECTION

FLAT PANEL DISPLAY

FLAT PANEL MONITOR MOUNT

FPD DEVICE:
MFR: CHIEF MFR
MODEL: XSM1U

FPD DEVICE
POWER AND DATA (BY ELEC)

USE (4) 1/4" DIAMETER TEK
SCREWS TO WALL STRUCTURE

WHERE 16GA (50KSI) STUDS DO NOT LINE UP
WITH SCREWS FOR MOUNTING
PROVIDE WALL BACKING
(SEE 5/S1.6)

CONDUIT (BY ELEC)

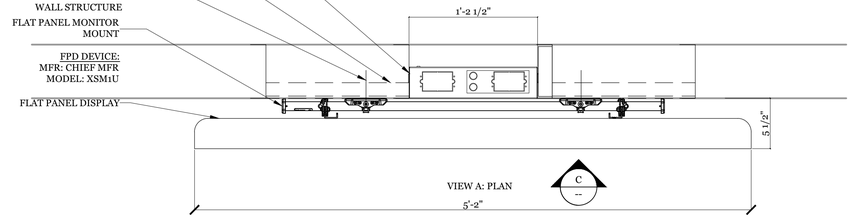

VIEW A: PLAN

FPD DEVICE
POWER AND
DATA (BY ELEC)

WHERE 16GA (50KSI)
STUDS DO NOT LINE UP
WITH SCREWS FOR
MOUNTING
PROVIDE WALL BACKING
(SEE 5/S1.6)

USE (4) 1/4"
DIAMETER TEK
SCREWS TO
WALL STRUCTURE

FLAT PANEL MONITOR
MOUNT

FPD DEVICE:
MFR: CHIEF MFR
MODEL: XSM1U

FLAT PANEL DISPLAY

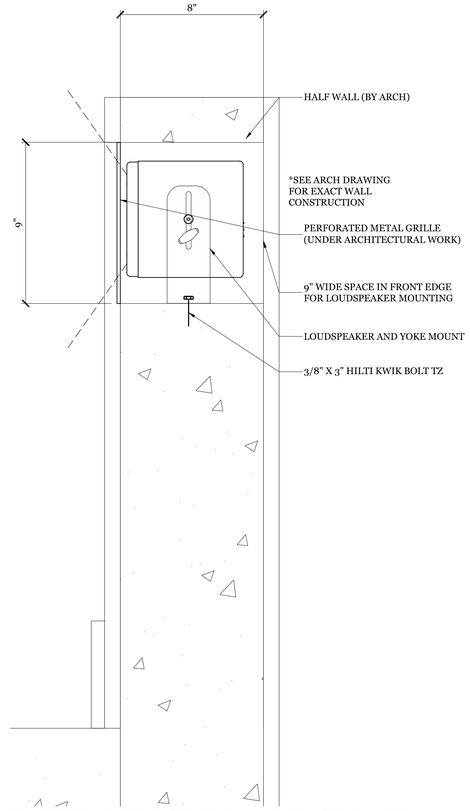

HALF WALL (BY ARCH)

*SEE ARCH DRAWING
FOR EXACT WALL
CONSTRUCTION

PERFORATED METAL GRILLE
(UNDER ARCHITECTURAL WORK)

9" WIDE SPACE IN FRONT EDGE
FOR LOUDSPEAKER MOUNTING

LOUDSPEAKER AND YOKE MOUNT

3/8" X 3" HILTI KWIK BOLT TZ

1 FPD-T DEVICE FLAT PANEL MOUNTING DETAIL

1-1/2"=1'-0"

TOTAL MAX WEIGHT: 250 LBS

2 FRONT FILL LOUDSPEAKER MOUNTING

3"=1'-0"

THIS DEVICE WEIGHS
LESS THAN 20 LBS.

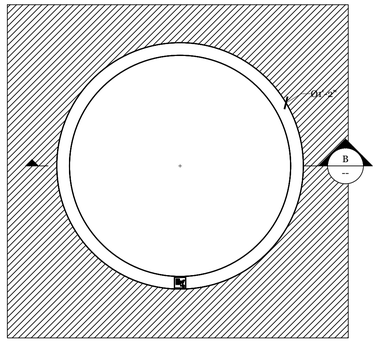

VIEW A: BOTTOM VIEW

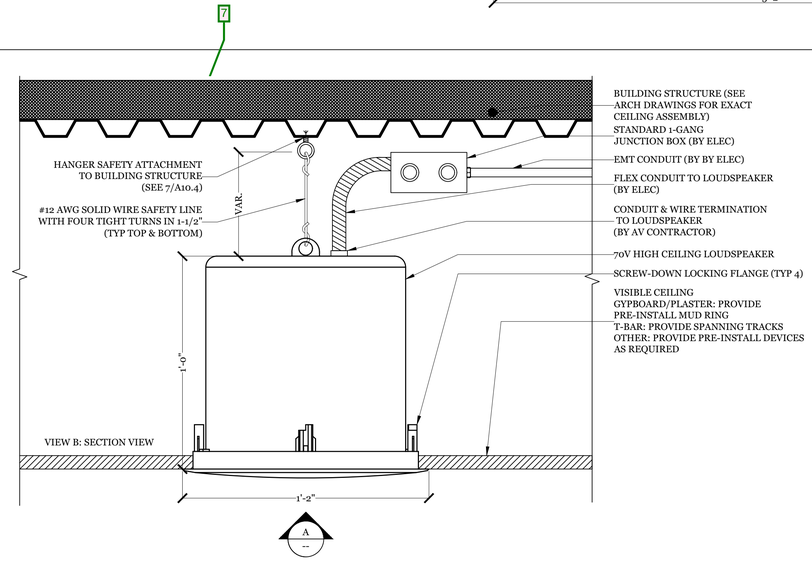

BUILDING STRUCTURE (SEE
ARCH DRAWINGS FOR EXACT
CEILING ASSEMBLY)

STANDARD 1-GANG
JUNCTION BOX (BY ELEC)

EMT CONDUIT (BY BY ELEC)

FLEX CONDUIT TO LOUDSPEAKER
(BY ELEC)

CONDUIT & WIRE TERMINATION
TO LOUDSPEAKER
(BY AV CONTRACTOR)

70V HIGH CEILING LOUDSPEAKER

SCREW-DOWN LOCKING FLANGE (TYP 4)

VISIBLE CEILING
GYPBOARD/PLASTER: PROVIDE
PRE-INSTALL MUD RING
T-BAR: PROVIDE SPANNING TRACKS
OTHER: PROVIDE PRE-INSTALL DEVICES
AS REQUIRED

VIEW B: SECTION VIEW

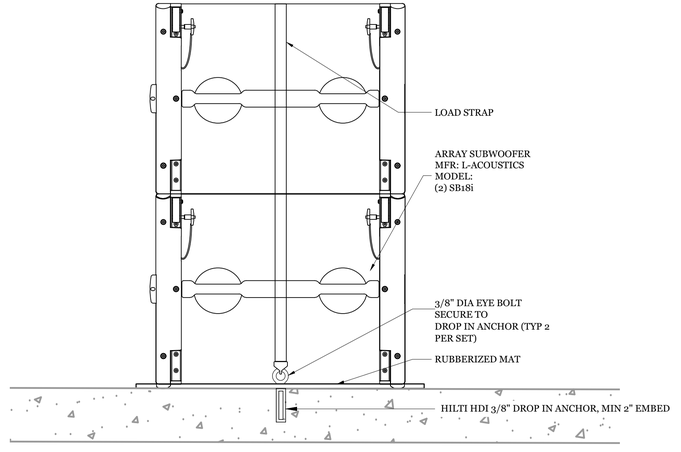

3 SHC DEVICE MOUNTING

3"=1'-0"

THIS DEVICE WEIGHS
LESS THAN 20 LBS.

4 SUBWOOFER MOUNTING

1-1/2"=1'-0"

TOTAL MAX WEIGHT: 250 LBS

GENERAL NOTES

1. ALL AC OUTLETS, CONDUIT & BACKBOXES BY ELEC.
2. REQUIRED STRUCTURAL BACKING BY ARCH.
3. AV CONTRACTOR TO COORDINATE WITH ELEC
TO DETERMINE EXACT LOCATION OF AV BACKBOXES.

QUATTROCCHI KWOK ARCHITECTS
Main Office:
636 Fifth Street, Santa Rosa, CA 95404
Pleasanton Office:
600 Main Street, Suite E,
Pleasanton, CA 94566
(707) 576-0829

LICENSED ARCHITECT
JIM THEISS
LICENSE # C22643
EXP JUNE 30, 2019
STATE OF CALIFORNIA

SIGNED: DECEMBER 14, 2018

The Shalleck Collaborative Inc.
Planning and Design of Theatres | Production Systems | AV
1533 Martin Luther King Jr Way
Berkeley, CA 94709
tel 415.956.1000
www.shalleck.com

FREEDOM HIGH SCHOOL

PERFORMING ARTS AND CTE FACILITIES

1050 NEROLY RD
OAKLEY, CA 94561

LIBERTY UNION HIGH SCHOOL DISTRICT

ARCH PROJECT NO:	1739.00
DRAWN BY:	
DRAWING SCALE:	
PTN:	61721-0068

BID SET

AUGUST 13, 2019

SHEET TITLE

AV MOUNTING DETAILS

SHEET NUMBER

AV-7.12

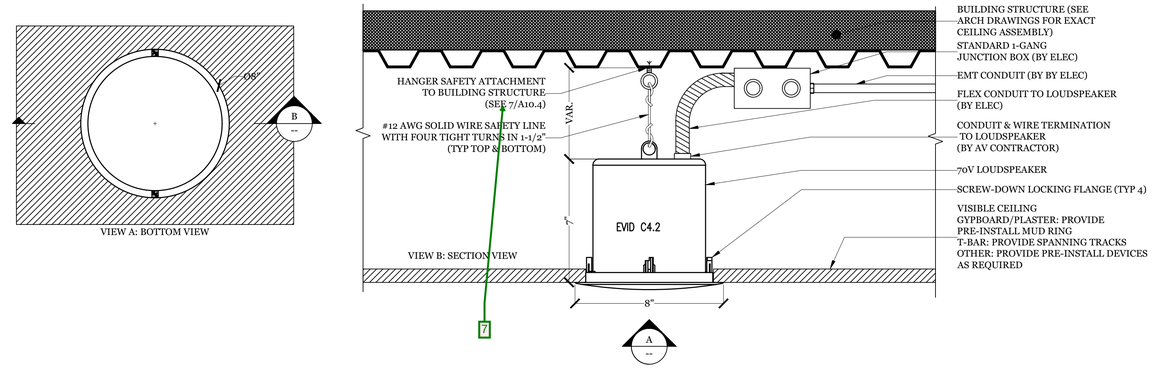

1 SC DEVICE MOUNTING

3"=1'-0"

THIS DEVICE WEIGHS LESS THAN 20 LBS.

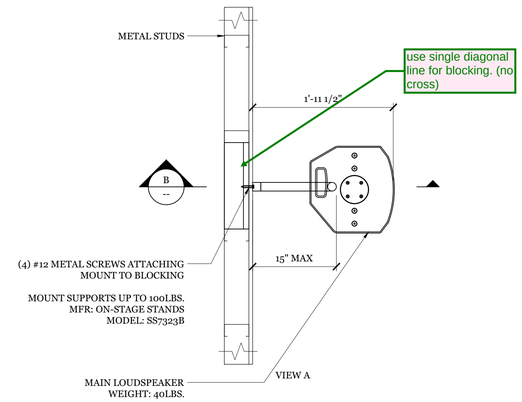

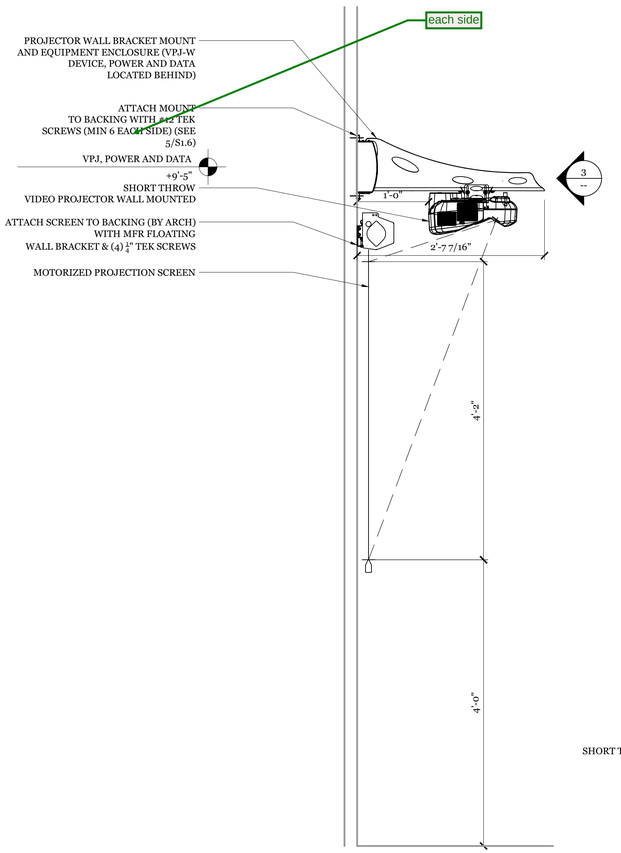

2 PROJECTOR & SCREEN MOUNTING AT CLASSROOM

1-1/2"=1'-0"

TOTAL MAX WEIGHT: 35 LBS

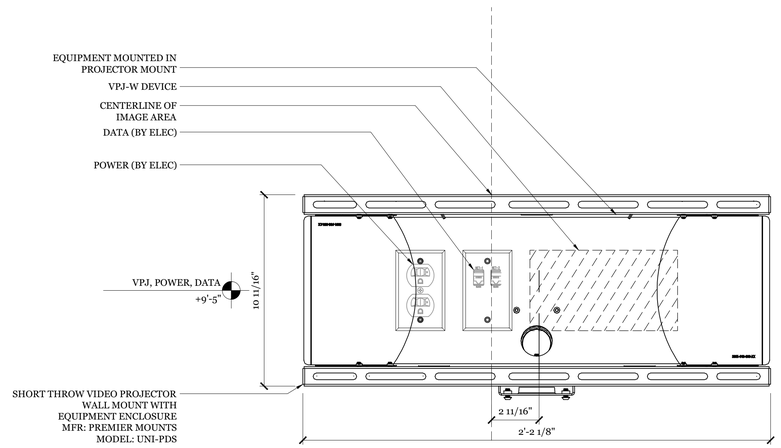

3 PROJECTOR MOUNT ELEVATION

3"=1'-0"

TOTAL MAX WEIGHT: 60 LBS

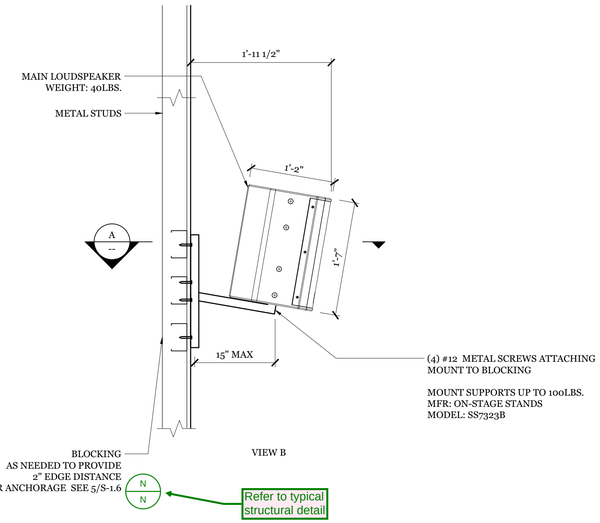

4 LS-1 DEVICE LOUDSPEAKER AT CLASSROOMS MOUNTING

1-1/2"=1'-0"

TOTAL MAX WEIGHT: 30 LBS

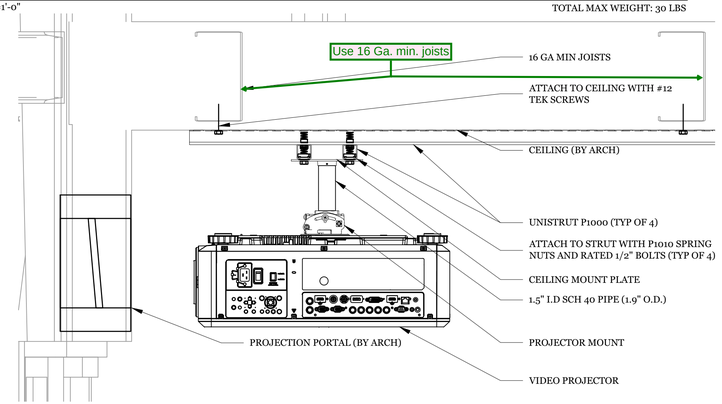

5 VIDEO PROJECTOR AT THEATRE MOUNTING

1-1/2"=1'-0"

TOTAL MAX WEIGHT: 60 LBS

GENERAL NOTES

1. ALL AC OUTLETS, CONDUIT & BACKBOXES BY ELEC.
2. REQUIRED STRUCTURAL BACKING BY ARCH.
3. AV CONTRACTOR TO COORDINATE WITH ELEC TO DETERMINE EXACT LOCATION OF AV BACKBOXES.

QUATTROCCHI KWOK ARCHITECTS

Main Office:
636 Fifth Street, Santa Rosa, CA 95404
Pleasanton Office:
600 Main Street, Suite E,
Pleasanton, CA 94566
(707) 576-0829

LICENSED ARCHITECT
JIM THEISS
LICENSE # C22643
EXP JUNE 30, 2019
STATE OF CALIFORNIA

SIGNED: DECEMBER 14, 2018

The Shalleck Collaborative Inc.
Planning and Design of Theatres | Production Systems | AV
1533 Martin Luther King Jr Way
Berkeley, CA 94709
tel 415-956-0200
www.shalleck.com

FREEDOM HIGH SCHOOL

PERFORMING ARTS AND CTE FACILITIES

1050 NEROLY RD
OAKLEY, CA 94561

LIBERTY UNION HIGH SCHOOL DISTRICT

ARCH PROJECT NO:	1739.00
DRAWN BY:	
DRAWING SCALE:	
PTN:	61721-0068

BID SET

AUGUST 13, 2019

SHEET TITLE

AV MOUNTING DETAILS

SHEET NUMBER

AV-7.13

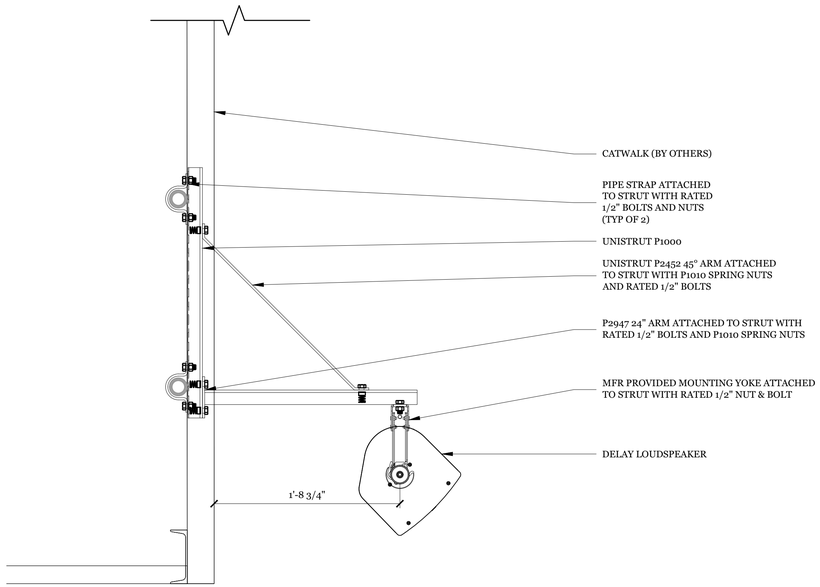

1 DELAY LOUDSPEAKER MOUNTING MOUNTING

1-1/2"=1'-0"

TOTAL MAX WEIGHT: 30 LBS

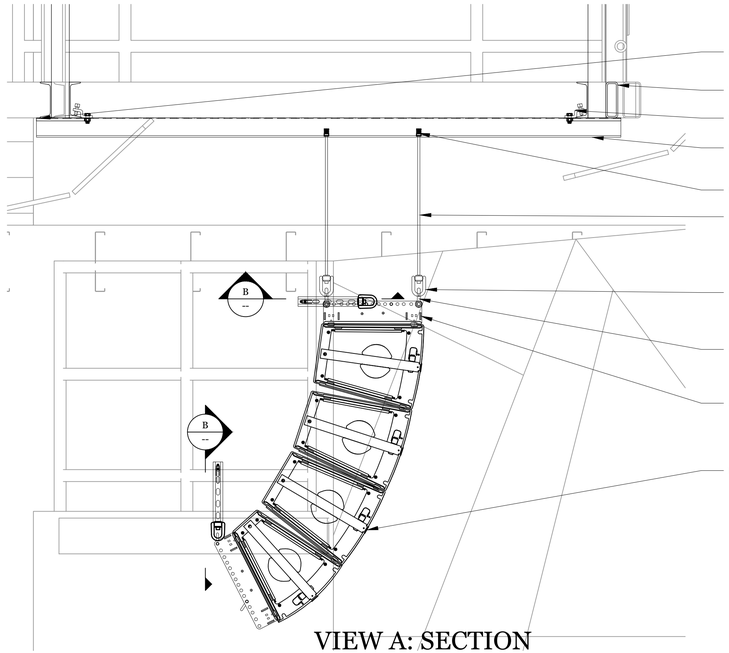

VIEW A: SECTION

Clarify. Provide 4 way bracing top and bottom.

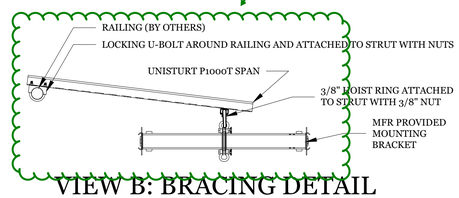

VIEW B: BRACING DETAIL

2 LOUDSPEAKER ARRAY MOUNTING

1-0"=1'-0"

TOTAL MAX WEIGHT: 400 LBS

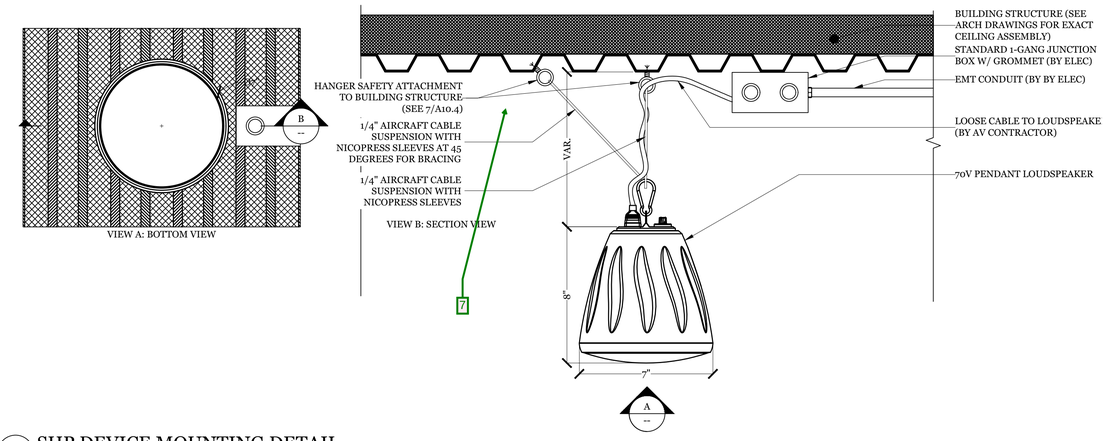

VIEW A: BOTTOM VIEW

VIEW B: SECTION VIEW

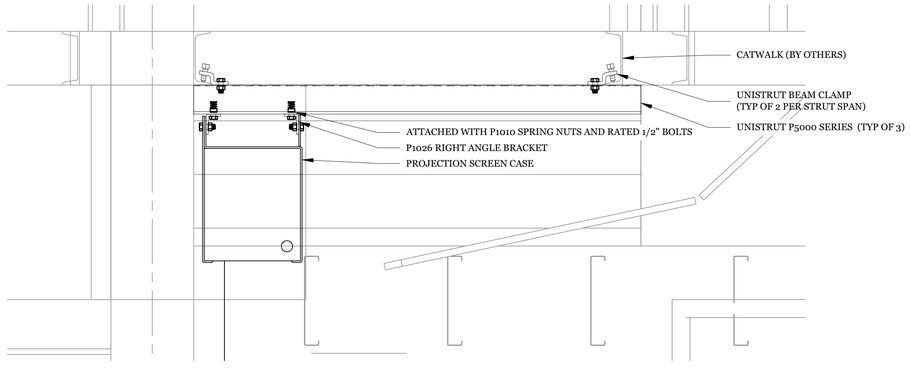

3 PROJECTION SCREEN AT THEATRE MOUNTING SECTION

1-1/2"=1'-0"

TOTAL MAX WEIGHT: 840 LBS

4 SHP DEVICE MOUNTING DETAIL

3"=1'-0"

THIS DEVICE WEIGHS LESS THAN 20 LBS.

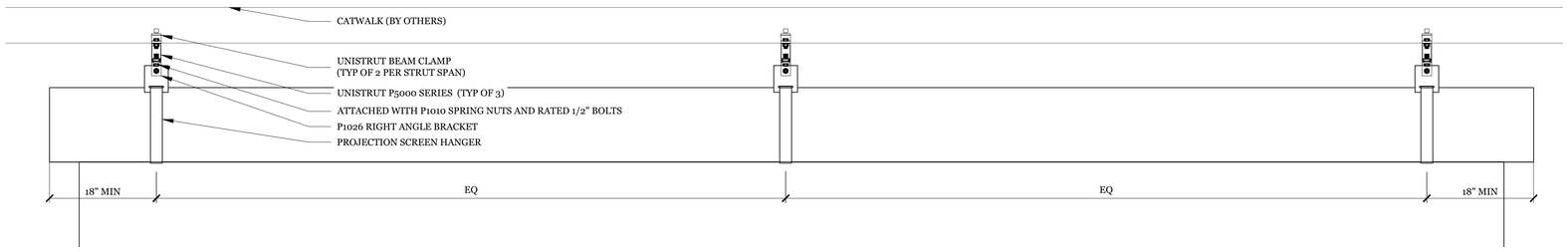

5 PROJECTION SCREEN AT THEATRE MOUNTING ELEVATION

1-0"=1'-0"

TOTAL MAX WEIGHT: 840 LBS

GENERAL NOTES

1. ALL AC OUTLETS, CONDUIT & BACKBOXES BY ELEC.
2. REQUIRED STRUCTURAL BACKING BY ARCH.
3. AV CONTRACTOR TO COORDINATE WITH ELEC TO DETERMINE EXACT LOCATION OF AV BACKBOXES.

QUATTROCCHI KWOK ARCHITECTS
Main Office:
636 Fifth Street, Santa Rosa, CA 95404
Pleasanton Office:
600 Main Street, Suite E,
Pleasanton, CA 94566
(707) 576-0829

LICENSED ARCHITECT
JIM THEISS
LICENSE # C22643
EXP JUNE 30, 2019
STATE OF CALIFORNIA

SIGNED: DECEMBER 14, 2018

The Shalleck Collaborative Inc.
Planning and Design of Theatres | Production Systems | AV
1533 Martin Luther King Jr Way
Berkeley, CA 94709
tel 415-956-1000
www.shalleck.com

FREEDOM HIGH SCHOOL

PERFORMING ARTS AND CTE FACILITIES

1050 NEROLY RD
OAKLEY, CA 94561

LIBERTY UNION HIGH SCHOOL DISTRICT

ARCH PROJECT NO: 1739.00
DRAWN BY:
DRAWING SCALE:
PTN: 61721-0068

BID SET

AUGUST 13, 2019

SHEET TITLE

AV MOUNTING DETAILS

SHEET NUMBER

AV-7.14

Drawing: H:\PROJECTS\2015\2006\DRAWINGS\ARCH\SHEETS\FP-0.1.DWG
Xrefs: DT1-PHS2.DWG; DT2-PHS2.DWG; DT3-PHS2.DWG; DT4-PHS2.DWG; MA0-B000.DWG
OCTOBER 29, 2019 9:34:44 a.m.

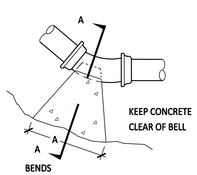

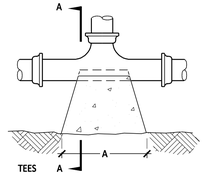

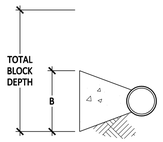

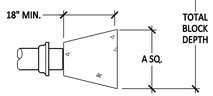

SOIL BEARING CAPACITY 2000 PSF. SEE PAGE 13 OF PROJECT GEOTECH REPORT.

THRUST BLOCK CALCULATIONS PER NFPA 13: TABLE A.10.6.1(b)

6" - 90 BEND AREA = (7.9 S.F.)(225 PSI/100 PSI)(1000 PSF/2000 PSF) = 8.9 S.F.
6" - 45 BEND AREA = 8.9 S.F. x 0.541 = 4.8 S.F.
6" - 22.5 BEND AREA = 8.9 S.F. x 0.276 = 2.5 S.F.
6" - DEAD END AREA = (5.6 S.F.)(225 PSI/100 PSI)(1000 PSF/2000 PSF) = 6.3 S.F.

PIPE SIZE	90° BENDS			45° BENDS			22.5° BENDS			TEES and PLUGS		
	SIZE SQ. FT.	"A"	"B"	SIZE SQ. FT.	"A"	"B"	SIZE SQ. FT.	"A"	"B"	SIZE SQ. FT.	"A"	"B"
6"	8.9	54"	24"	4.8	39"	18"	2.5	30"	12"	6.3	36"	24"

BASED ON A WATER PRESSURE OF 225 POUNDS PER SQUARE INCH AND A SOIL RESISTANCE OF 2000 POUNDS PER SQUARE FOOT, PER NFPA TABLE A.10.6.1(b).

TOTAL BLOCK DEPTH SHALL BE AT LEAST TWICE THE BLOCK DEPTH "B" IN ACCORDANCE WITH NFPA 24.

2 FP-0.1 THRUST BLOCKS

NO SCALE

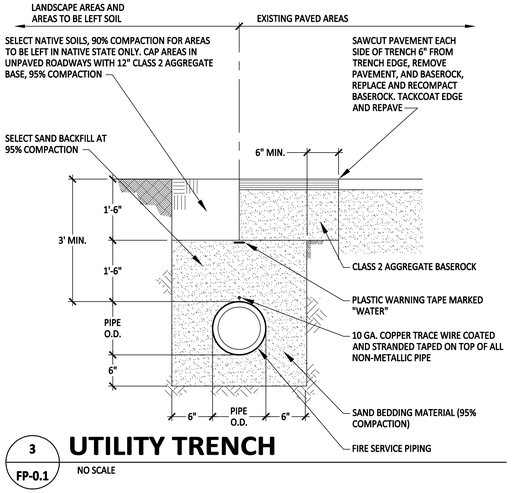

3 FP-0.1 UTILITY TRENCH

NO SCALE

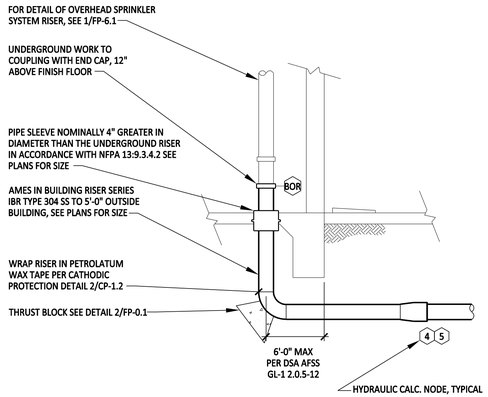

NOTE: PROVIDE CATHODIC PROTECTION IN ACCORDANCE CP-1.2, CP-1.3, AND SECTION 13 4713. SEE DETAIL 2/CP-1.2

1 FP-0.1 IN BUILDING RISER

NO SCALE

DSA GENERAL NOTES

1. THE INTENT OF THE CONTRACT DOCUMENTS IS TO ADD A NEW BUILDINGS ON THE SCHOOL'S CAMPUS. SHOULD ANY CONDITIONS DEVELOP NOT COVERED BY THE CONTRACT DOCUMENTS, A CONSTRUCTION CHANGE DOCUMENT DETAILING AND SPECIFYING THE REQUIRED WORK SHALL BE SUBMITTED TO AND APPROVED BY DSA BEFORE PROCEEDING WITH THE WORK.
2. ALL HANGERS AND SEISMIC SWAY BRACING SHALL BE DESIGNED AND INSTALLED PER NFPA 13 AND CHAPTER 16A CALIFORNIA BUILDING CODE.
3. WHERE ANCHORAGE DETAILS ARE NOT SHOWN ON THE DRAWINGS, THE FIELD INSTALLATION SHALL BE SUBJECT TO THE APPROVAL OF THE STRUCTURAL ENGINEER AND THE FIELD REPRESENTATIVE OF THE DIVISION OF THE STATE ARCHITECT.

FIRE DEPARTMENT CONNECTIONS:

NFPA 13 (2016) SEC. 8.17.2.5.1 CHECK-VALVE SHALL BE PROVIDED AT FIRE DEPARTMENT CONNECTION ASSEMBLY (FDC) TO PREVENT WATER (PRESSURE) AT INLET OF FDC VALVE.

TITLE 19 ARTICLE 906 (A) A LABEL OF THE SELF-ADHESIVE TYPE SHALL BE PLACED ON THE FIRE DEPARTMENT CONNECTION OR ON THE RISER FOR FIRE SPRINKLER SYSTEMS WITH THE DATE OF SERVICE AND/OR DATE INSTALLATION WAS PERFORMED AND LICENSE NUMBER OF PERSON PERFORMING SERVICE WORK.

FIRE DEPARTMENT SIGNAGE:

CONTRACTOR SHALL PROVIDE SIGNS AT FIRE DEPARTMENT CONNECTIONS SERVING THIS SYSTEM. SIGNS SHALL INDICATE BUILDINGS SERVED BY FIRE DEPARTMENT CONNECTIONS.

CONTRACTOR SHALL PROVIDE SIGNS AT EXISTING BACKFLOW PREVENTER. SIGNS SHALL INDICATE BUILDINGS AND HYDRANTS SERVED BY BACKFLOW PREVENTER.

SEE SITE PLAN FOR BUILDING AND HYDRANT MARKS/IDENTIFICATIONS.

LIST OF GOVERNING CODES:

2016 BUILDING STANDARDS ADMINISTRATIVE CODE, PART 1, TITLE 24, C.C.R.
2016 CALIFORNIA BUILDING CODE (CBC), PART 2, TITLE 24, C.C.R.
2016 CALIFORNIA ELECTRICAL CODE, PART 3, TITLE 24, C.C.R.
2016 CALIFORNIA MECHANICAL CODE (CMC), PART 4, TITLE 24, C.C.R.
2016 CALIFORNIA PLUMBING CODE (CPC), PART 5, TITLE 24, C.C.R.
2016 CALIFORNIA ENERGY CODE (CEC), PART 6, TITLE 24, C.C.R.
2016 CALIFORNIA FIRE CODE (CFC), PART 9, TITLE 24, C.C.R.
2016 CALIFORNIA REFERENCED STANDARDS CODE, PART 12, TITLE 24, C.C.R.
TITLE 19, C.C.R., PUBLIC SAFETY, STATE FIRE MARSHAL REGULATIONS.
2016 NFPA 13 AS AMENDED
2016 NFPA 24 AS AMENDED

ALL SECTION NUMBERS BELOW REFER TO GROUP 1, CHAPTER 4, PART 1, TITLE 24, C.C.R.

1. ADDENDA, CHANGE ORDERS PER SECTION 4-338.
2. INSPECTOR APPROVED BY DSA. INSPECTOR AND CONTINUOUS INSPECTION OF WORK PER SECTION 4-333(b) AND 4-342.
3. TESTS AND TESTING LABORATORY PER SECT. 4-335.
4. SPECIAL INSPECTION PER SECT. 4-333(c).
5. CONTRACTOR SHALL SUBMIT VERIFIED REPORTS PER SECT. 4-336 AND 4-343(c).
6. ADMINISTRATION OF CONSTRUCTION PER PART 1, TITLE 24, C.C.R. - DUTIES OF ARCHITECT, STRUCTURAL ENGINEER OR PROFESSIONAL ENGINEER PER SECT. 4-333(a) AND 4-341.
7. GOVERNING CODES: TITLE 24.
8. A COPY OF PARTS 1, 2, 3, 4, AND 5 OF TITLE 24 SHALL BE KEPT AVAILABLE IN THE FIELD DURING CONSTRUCTION.
9. DSA SHALL BE NOTIFIED OF START OF CONSTRUCTION PER SECT. 4-331.
10. SUPERVISION BY THE OFFICE OF REGULATION SERVICE PER SECT. 4-334.

UNDERGROUND FIRE SERVICE GENERAL NOTES:

NFPA 24 (2016) SEC. 10.1.6 ALL FERROUS METAL PIPE SHALL BE LINED, AND STEEL PIPE SHALL BE COATED AND WRAPPED WITH JOINTS FIELD-COATED AND WRAPPED AFTER ASSEMBLY. FOR BURIED PIPE, GALVANIZING, INTERNALLY OR EXTERNALLY, DOES NOT MEET THE REQUIREMENTS OF THIS SECTION.

NFPA 24 (2016) SEC. 10.3.6.2 ALL BOLTED JOINT ACCESSORIES SHALL BE CLEANED AND THOROUGHLY COATED WITH ASPHALT OR OTHER CORROSION-RETARDING MATERIAL AFTER INSTALLATION.

NFPA 24 (2016) SEC. 10.8.3.5 AFTER INSTALLATION, RODS, NUTS, BOLTS, WASHERS, CLAMPS, AND OTHER RESTRAINING DEVICES, EXCEPT THRUST BLOCKS, SHALL BE CLEANED AND THOROUGHLY COATED WITH A BITUMINOUS OR OTHER ACCEPTABLE CORROSION-RETARDING MATERIAL.

NFPA 24 (2016) SEC. 10.8.2 THRUST BLOCKS SHALL BE OF A CONCRETE MIX NOT LEANER THAN ONE PART CEMENT, TWO AND ONE-HALF PARTS SAND, AND FIVE PARTS STONE WITH A MINIMUM COMPRESSIVE STRENGTH (Fc) OF 2500 PSI. THRUST BLOCKS SHALL BE PLACED BETWEEN UNDISTURBED EARTH AND THE FITTING TO BE RESTRAINED, AND SHALL BE OF SUCH BEARING AS TO ENSURE ADEQUATE RESISTANCE TO THE THRUST TO BE ENCOUNTERED IN GENERAL, THRUST BLOCKS SHALL BE SO PLACED THAT THE JOINTS WILL BE ACCESSIBLE FOR INSPECTION AND REPAIR.

NFPA 24 (2016) SEC. 10.10.2.1 UNDERGROUND MAINS SHALL BE COMPLETELY FLUSHED TO REMOVE FOREIGN MATERIALS THAT MIGHT HAVE ENTERED THE MAIN DURING THE COURSE OF THE INSTALLATION PER TABLE 10.10.2.1.3 TO PRODUCE A VELOCITY OF 10 FEET PER SECOND IN PIPES. LOCAL FIRE JURISDICTION SHALL BE NOTIFIED OF DATE AND TIME OF TESTING SO THEY MAY OBSERVE TESTING

NFPA 24 (2016) SEC. 10.10.2.2 ALL NEW PRIVATE UNDERGROUND FIRE SERVICE MAINS SHALL BE TESTED HYDROSTATICALLY AT NOT LESS THAN 200-PSI PRESSURE FOR A MINIMUM OF TWO HOURS. LOCAL FIRE JURISDICTION SHALL BE NOTIFIED OF DATE AND TIME OF TESTING AND SHALL OBSERVE AND/OR AND/OR ASSIST IOR WHENEVER POSSIBLE.

THE AMOUNT OF LEAKAGE IN BURIED PIPING SHALL BE MEASURED AT THE SPECIFIED TEST PRESSURE BY PUMPING FROM A CALIBRATED CONTAINER. FOR NEW PIPE, THE AMOUNT OF LEAKAGE AT THE JOINTS SHALL NOT EXCEED TWO QUARTS PER HOUR PER 100 GASKETS OR JOINTS IRRESPECTIVE OF PIPE DIAMETER. NO VISIBLE LEAKAGE SHALL BE ALLOWED IN ABOVEGROUND PIPING. (ALSO SEE SEC. 10.10.2.2.6 FOR ALLOWABLE LEAKAGE)

HYDROSTATIC TESTS SHALL BE MADE BEFORE THE JOINTS ARE COVERED SO THAT ANY LEAKS MAY BE READILY DETECTED.

NFPA 24 (2016) SEC. 10.10 BEFORE ASKING FINAL APPROVAL OF AN INSTALLATION BY THE INSPECTOR OF RECORD, THE INSTALLING COMPANY SHALL FURNISH A CONTRACTOR'S MATERIAL AND TEST CERTIFICATE TO BE SUBMITTED TO THE OWNER. A TYPICAL CERTIFICATE IS SHOWN IN FIGURE 10.10.1. THIS FORM SHALL BE GIVEN TO THE APPROVING AUTHORITY, OWNER, AND CONTRACTOR.

NFPA 24 (2016) SEC. 10.4 THE DEPTH OF COVER OVER WATER PIPES SHALL BE NOT LESS THAN 2'-6" TO PREVENT MECHANICAL DAMAGE AND SHALL BE BURIED A MINIMUM OF 3'-0" UNDER DRIVEWAYS.

* THE METHOD USED FOR UNDERGROUND FIRE-LINES WHEN ENTERING BUILDINGS UNDER CONCRETE FOOTINGS SHALL HAVE THE STRUCTURAL ENGINEER OF RECORD APPROVAL. NFPA 24 (2016) SEC. 12.2.6 NFPA 13 (2016) SEC. 9.3.4.2 REQUIRES A CLEARANCE BY A PIPE SLEEVE WITH A NOMINAL DIAMETER 4 IN. LARGER THAN THE NOMINAL DIAMETERS OF THE SUPPLY PIPING 4 IN. NOMINAL AND LARGER. (I.E.: FIRE-LINES NOMINAL 6 IN. REQUIRES 10 IN. SLEEVE)

CPC SEC. 604.1 (2016) PVC PIPING MAY BE INSTALLED TO 5 FEET OUTSIDE THE FOUNDATION OF ANY BUILDING OR STRUCTURE OR PARTS THEREOF. IT SHALL BE BURIED IN THE GROUND FOR ITS ENTIRE LENGTH. IT SHALL NOT BE INSTALLED WITHIN OR UNDER ANY BUILDING OR STRUCTURE. (DUCTILE PIPE SHALL BE INSTALLED WITHIN 5 FEET OF BUILDING)

OVERHEAD FIRE SPRINKLER SYSTEM GENERAL NOTES:

NFPA 13 (2016) SEC. 9.2.1.3.3.4 WHERE FLEXIBLE SPRINKLER HOSE FITTINGS ARE USED TO CONNECT SPRINKLERS TO BRANCH LINES IN SUSPENDED CEILINGS, A LABEL LIMITING RELOCATION OF THE SPRINKLER SHALL BE PROVIDED ON THE ANCHORING COMPONENT.

NFPA 13 (2016) SEC. 10.10.2.1 UNDERGROUND MAINS AND LEAD-IN CONNECTION MADE TO OVERHEAD SPRINKLER PIPING SYSTEMS SHALL BE COMPLETELY FLUSHED.

NFPA 13 (2016) SEC. 10.10.2.2 ALL INTERIOR PIPING AND APPURTENANCES SUBJECTED TO SYSTEM WORKING PRESSURE SHALL BE HYDROSTATIC ALLY TESTED AT 200 PSI AND SHALL MAINTAIN THAT PRESSURE WITHOUT LOSS FOR 2 HOURS. LOCAL FIRE DEPARTMENT SHOULD BE NOTIFIED OF DATE AND TESTING SO THEY MAY OBSERVE TESTING.

NFPA 13 (2016) SEC. 6.2.9 PROVIDE SPARE SPRINKLER HEAD CABINET, SPRINKLER WRENCH, AND NO FEWER THAT A TOTAL OF 6 SPARE HEADS MATCHING THE TYPES AND TEMPERATURE RATINGS IN EACH PROTECTED BUILDING FOR SYSTEMS LESS THAN 300 SPRINKLERS AND FEWER THAN 12 FOR SYSTEMS HAVING 300 TO 1000 SPRINKLERS.

NFPA 13 (2016) SEC. 9.3.6.1 PROVIDE RESTRAINT OF BRANCH LINES BY USING ONE OF THE FOLLOWING:
(1) LISTED SWAY BRACE ASSEMBLY
(2) WRAPAROUND U-HOOK SATISFYING THE REQUIREMENTS OF 9.3.5.5.11
(3) NO. 12, 440LB (200KG) WIRE INSTALLED AT LEAST 45 DEGREES FROM THE VERTICAL PLANE AND ANCHORED ON BOTH SIDES OF THE PIPE.
(4) CPVC HANGERS LISTED TO PROVIDE RESTRAINT
(5) HANGER NOT LESS THAN 45 DEGREES FROM VERTICAL INSTALLED WITHIN 6IN. OF THE VERTICAL HANGER ARRANGED FOR RESTRAINT AGAINST UPWARD MOVEMENT, PROVIDED IT IS UTILIZED SUCH THAT L/R DOES NOT EXCEED 400, WHERE THE ROD EXTENDS TO THE PIPE OR A SURGE CLIP HAS BEEN INSTALLED.

NFPA 72 (2016) SEC. 17.12.2 SPRINKLER FLOW SWITCH SHALL BE TESTED BY IOR TO CONFIRM THAT WHEN THE INSPECTOR'S TEST VALVE IS ACTIVATED AN ALARM WILL SOUND IN NOT MORE THAN 90 SECONDS.

NFPA 13 (2016) SEC. 6.9.3 FLOW SWITCH SHALL BE CONNECTED TO AN OUTSIDE ALARM BELL FOR EACH RISER. APPROVED IDENTIFICATION SIGN SHALL BE PROVIDED FOR OUTSIDE ALARM BELL "SPRINKLER FIRE ALARM - WHEN BELL RINGS CALL 911/FIRE DEPARTMENT".

NFPA 13 (2016) SEC. 25.5 FIGURE A25.5 HYDRAULIC CALCULATIONS DESIGN DATA PLACARD SHALL BE ATTACHED TO RISER. SHALL INCLUDE: 1) LOCATION OF DESIGN AREA(S). 2) DISCHARGE DENSITIES. 3) REQUIRED FLOW AND RESIDUAL PRESSURE DEMAND AT BASE OF RISER. 4) OCCUPANCY CLASSIFICATION. 5) HOSE STREAM DEMAND INCLUDED IN ADDITION TO SPRINKLER DEMAND. 6) THE NAME OF THE INSTALLING CONTRACTOR.

NFPA 13 (2016) SEC. 25.1 (3) SPRINKLER CONTRACTOR (C16) SHALL COMPLETE AND SIGN CONTRACTOR'S MATERIAL AND TEST CERTIFICATE FOR THE OVERHEAD SPRINKLER SYSTEM USING FORM IN FIGURE 25.1. THIS COMPLETED FORM SHALL BE GIVEN TO THE APPROVING AUTHORITY, OWNER, AND CONTRACTOR.

NFPA 13 (2016) SEC. 25.2.3.4.1 THE MAIN DRAIN VALVE SHALL BE OPENED AND REMAIN OPENED UNTIL THE SYSTEM PRESSURE STABILIZES. THE STATIC AND RESIDUAL PRESSURES SHALL BE RECORDED ON THE CONTRACTOR'S TEST CERTIFICATE.

TITLE 19 ARTICLE (A) A LABEL OF SELF-ADHESIVE TYPE SHALL BE PLACED ON THE FIRE DEPARTMENT CONNECTION OR ON THE RISER FOR THE FIRE SPRINKLER SYSTEM WITH THE DATE OF SERVICE AND/OR DATE OF INSTALLATION WAS PREFORMED AND LICENSE NUMBER OF PERSON PERFORMING SERVICE WORK.

THE SPRINKLER CONTRACTOR SHALL HAVE A REPRESENTATIVE PRESENT AT THE ROUGH-IN/HYDRO INSPECTION.

NFPA 13 (2016) SEC. 9.3.4.2 WHERE PIPE PASSES THROUGH HOLES IN PLATFORMS, FOUNDATIONS, WALLS, OR FLOORS, THE HOLES SHALL BE SIZED SUCH THAT THE DIAMETER OF THE HOLE IS NOMINALLY 2" LARGER THAN THE PIPE FOR PIPE 1" NOMINAL TO 3 1/2" NOMINAL AND 4" LARGER THAN PIPE FOR PIPE 4" NOMINAL AND LARGER.

FIRE PROTECTION LEGEND

SYMBOL	ABBRV.	IDENTIFICATION	ABBRV.	IDENTIFICATION
F	F	FIRE WATER	(E)	EXISTING
SPKR	SPKR	SPRINKLER	ELEC	ELECTRICAL
●		PENDENT ON 401 EXTENSION	ELEV	ELEVATION
◉		RECESSED PENDENT	EQUIP	EQUIPMENT
⊖		UPRIGHT W/ 1" OUTLET BELOW	FFE	FINISHED FLOOR ELEVATION
◎		UPRIGHT ON 1" SPRIG UP	FLA	FULL LOAD AMPS
○		UPRIGHT ON BRANCH LINE	FLEX	FLEXIBLE
◑		UPRIGHT OVER PENDENT	FLR	FLOOR
◁		SIDEWALL	FS	FLOOR SINK
		GROOVED COUPLING	FPM	FEET PER MINUTE
SB-X		SEISMIC BRACE LOCATION	FT	FEET
		4WAY EQ BRACE LOCATION	FT HD	FEET HEAD
		HANGER LOCATION	GPM	GALLONS PER MINUTE
		BRANCH LINE RESTRAINT	HP	HORSEPOWER
X		HYDRAULIC CALCULATION NODE	HZ	HERTZ
CHVA	CHVA	CHECK VALVE	IE	INVERT ELEVATION
		GATE VALVE	IN	INCH
T&PRV	T&PRV	TEMP & PRESS RELIEF VALVE	INV	INVERT
DCDA	DCDA	DOUBLE CHECK DETECTOR ASSEMBLY	KW	KILOWATTS
		UNION	LBS	POUNDS
P		PRESSURE GAUGE	MAX	MAXIMUM
	FC	FLEXIBLE CONNECTION	MBH	1000 BTU PER HOUR
RPBP	RPBP	REDUCE PRESS BACKFLOW PREVENTER	MFR	MANUFACTURER
			MIN	MINIMUM
	FH	FIRE HYDRANT	(N)	NEW
	PIV	POST INDICATING VALVE	NC	NORMALLY CLOSED
AD	AD	ACCESS DOOR	NIC	NOT IN CONTRACT
		BACK OF ELBOW	NO	NORMALLY OPEN
Ø	DIA	DIAMETER	OC	ON CENTER
	P.O.C.	POINT OF CONNECTION	PH	PHASE
℄		CENTERLINE	PRV	PRESSURE REDUCING VALVE
	&	AND	PSI	POUNDS PER SQUARE INCH
	@	AT	P/T	PRESSURE/TEMPERATURE
	°F	DEGREES FAHRENHEIT	QTY	QUANTITY
	AFF	ABOVE FINISH FLOOR	REQD	REQUIRED
	AMP	AMPERE	RLA	RATED/RUNNING LOAD AMPS
	APPROX	APPROXIMATE	RPM	REVOLUTIONS PER MINUTE
	BHP	BRAKE HORSEPOWER	SOV	SHUT-OFF VALVE
	BLDG	BUILDING	STD	STANDARD
	CFH	CUBIC FEET PER HOUR	STRUCT	STRUCTURAL
	CI	CAST IRON	TEMP	TEMPERATURE
	CIRC	CIRCULATING	TYP	TYPICAL
	CLG	CEILING	UL	UNDERWRITER'S LABORATORIES
	CONC	CONCRETE	UON	UNLESS OTHERWISE NOTED
	CONN	CONNECTION	V	VOLT
	CONT	CONTINUED	VTR	VENT THROUGH ROOF
	COORD	COORDINATE	W/	WITH
	CONST	CONSTRUCTION	WC	WATER COLUMN
	DN	DOWN	WT	WEIGHT
	DWGS	DRAWINGS		

FIRE FLOW CALCULATIONS:

CODE REQUIRED SITE FLOW:

CONSTRUCTION TYPE: V-B (WITH AUTOMATIC SPRINKLER SYSTEM)
FIRE FLOW CALCULATION AREA: 21,689 SF
2016 CFC FIRE FLOW(TABLE BB105.1): 4,000 GPM
2016 CFC MINIMUM FIRE FLOW: 1,500 GPM

AVAILABLE WATER SUPPLY:

CONTRA COSTA FIRE PROTECTION DISTRICT OCTOBER 23, 2018
STATIC PRESSURE: 48.6 PSI SEE FP-1.1 FOR LOCATION
RESIDUAL PRESSURE: 8.6 PSI
OBSERVED FLOW: 1881 GPM
AVAILABLE FLOW: 1569 GPM AT 20 PSI RESIDUAL

SEISMIC BRACING:

SPECTRAL RESPONSE:
LATITUDE: 37.96894° N
LONGITUDE: 121.72049° W
S_s = 1.496 (GEOLOGIC AND SEISMIC HAZARDS ASSESSMENT REPORT PAGE 24)
SEE DESIGN CRITERIA ON STRUCTURAL DRAWING S-0.1

SEISMIC COEFFICIENT:
C_p = 0.7 (2016 NFPA 13-TABLE 9.3.5.9.3)

USE C_p =0.7

SEE DRAWING FP-6.1, AND FP-6.2 FOR SPECIFIC SEISMIC BRACING DETAILS AND FP-6.3 FOR CALCULATIONS.

QUATTROCCHI KWOK ARCHITECTS
Main Office:
636 Fifth Street, Santa Rosa, CA 95404
Pleasanton Office:
600 Main Street, Suite E,
Pleasanton, CA 94566
(707) 576-0829

AXIOM ENGINEERS
CONSULTING ENGINEERS
www.axiomengineers.com
22 Lower Ragsdale Dr., Suite A
Monterey, California 93940-5788
ph. (831) 646-8000
fx. (831) 646-8038
AE Project # : 20190066

REGISTERED PROFESSIONAL ENGINEER
STEVEN E. RASON
No. M30657
EXP. JUNE 30, 2020
MECHANICAL
STATE OF CALIFORNIA

FREEDOM HIGH SCHOOL

PERFORMING ARTS AND CTE FACILITIES

1050 NEROLY RD
OAKLEY, CA 94561

LIBERTY UNION HIGH SCHOOL DISTRICT

ARCH PROJECT NO: 1739.00
DRAWN BY:
DRAWING SCALE:
PTN: 61721-0068

BID SET

AUGUST 13, 2019

SHEET TITLE

LEGEND, NOTES, AND DETAILS - FIRE PROTECTION

SHEET NUMBER

FP-0.1

THE USE OF THESE PLANS AND SPECIFICATIONS SHALL BE RESTRICTED TO THE ORIGINAL SITE FOR WHICH THEY WERE PREPARED AND PUBLICATION THEREOF IS EXPRESSLY LIMITED TO SUCH USE. RE-USE, REPRODUCTION, OR PUBLICATION BY ANY METHOD, IN WHOLE OR IN PART, IS PROHIBITED. TITLE TO THE PLANS AND SPECIFICATIONS REMAINS WITH THE ENGINEER WITHOUT PREJUDICE. VISUAL CONTACT WITH THESE PLANS AND SPECIFICATIONS SHALL CONSTITUTE PRIMA FACIE EVIDENCE OF THE ACCEPTANCE OF THESE RESTRICTIONS. AXIOM ENGINEERS INC - LEE & ASSOCIATES CONSULTING ENGINEERS

THE USE OF THESE PLANS AND SPECIFICATIONS SHALL BE RESTRICTED TO THE ORIGINAL SITE FOR WHICH THEY WERE PREPARED AND PUBLICATION THEREOF IS EXPRESSLY LIMITED TO SUCH USE. RE-USE, REPRODUCTION, OR PUBLICATION BY ANY METHODS, IN WHOLE OR IN PART, IS PROHIBITED. TITLE TO THE PLANS AND SPECIFICATIONS REMAINS WITH THE ENGINEER WITHOUT PREJUDICE. VISUAL CONTACT WITH THESE PLANS AND SPECIFICATIONS SHALL CONSTITUTE PRIMA FACIE EVIDENCE OF THE ACCEPTANCE OF THESE RESTRICTIONS. AXIOM ENGINEERS INC - LEE & ASSOCIATES CONSULTING ENGINEERS

Drawing: H:\PROJECTS\2019\0500\DWG\FP\FP-1.1.DWG
Xrefs: SITE-MAIN.DWG, SITE-IMG.DWG, MAS-BORDO.DWG
OCTOBER 29, 2019 9:34:44 a.m.

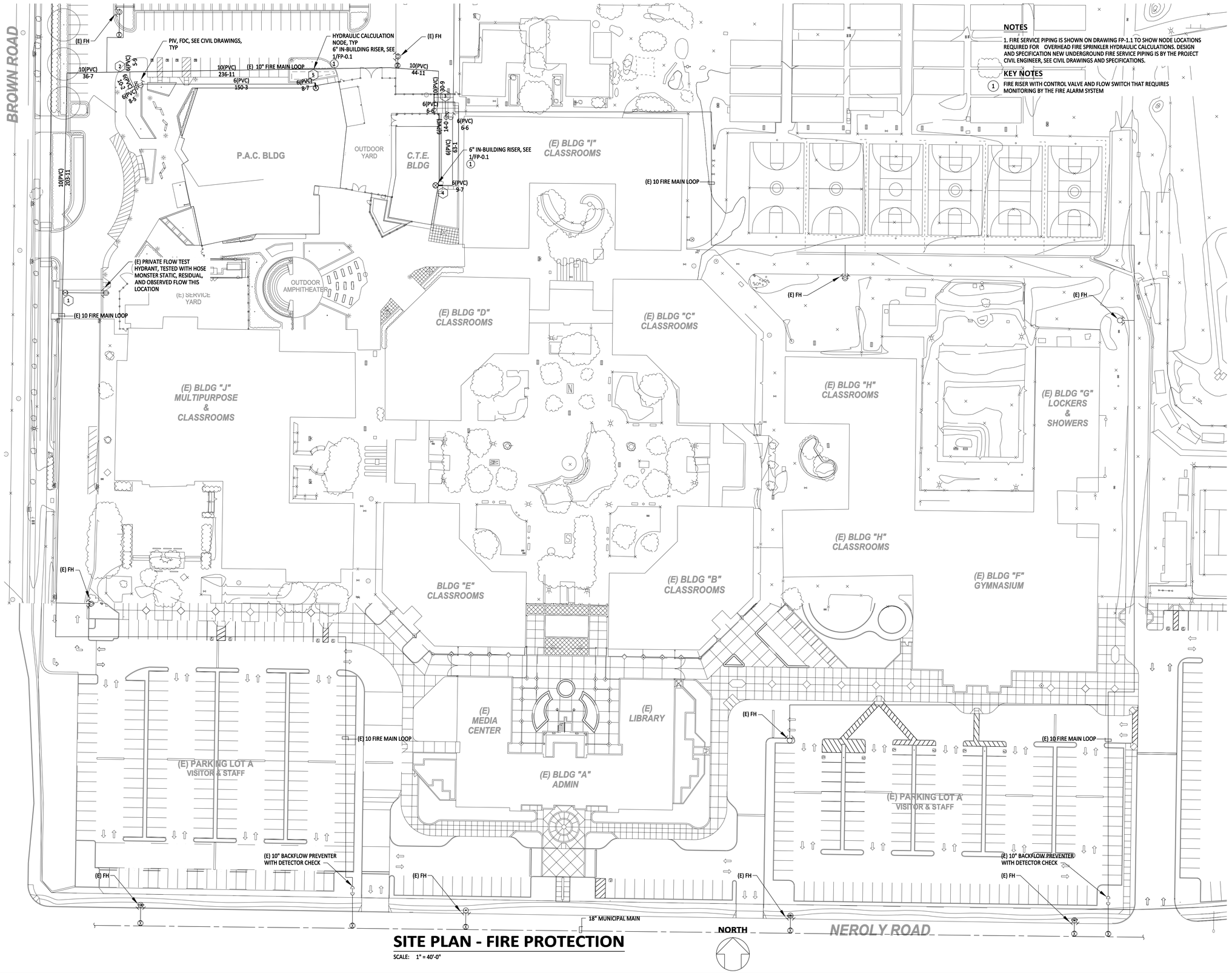

SITE PLAN - FIRE PROTECTION

SCALE: 1" = 40'-0"

NOTES

1. FIRE SERVICE PIPING IS SHOWN ON DRAWING FP-1.1 TO SHOW NODE LOCATIONS REQUIRED FOR OVERHEAD FIRE SPRINKLER HYDRAULIC CALCULATIONS. DESIGN AND SPECIFICATION NEW UNDERGROUND FIRE SERVICE PIPING IS BY THE PROJECT CIVIL ENGINEER, SEE CIVIL DRAWINGS AND SPECIFICATIONS.

KEY NOTES

1 FIRE RISER WITH CONTROL VALVE AND FLOW SWITCH THAT REQUIRES MONITORING BY THE FIRE ALARM SYSTEM

QUATTROCCHI KWOK ARCHITECTS
Main Office:
636 Fifth Street, Santa Rosa, CA 95404
Pleasanton Office:
600 Main Street, Suite E,
Pleasanton, CA 94566
(707) 576-0829

AXIOM ENGINEERS CONSULTING ENGINEERS
www.axiomengineers.com
22 Lower Ragsdale Dr., Suite A
Monterey, California 93940-5788
ph. (831) 649-8000
fx. (831) 649-8038
AE Project # :20190066

REGISTERED PROFESSIONAL ENGINEER
STEVEN E. RASMUSSEN
No. M30657
EXP. JUNE 30, 2020
MECHANICAL
STATE OF CALIFORNIA

FREEDOM HIGH SCHOOL

PERFORMING ARTS AND CTE FACILITIES

1050 NEROLY RD
OAKLEY, CA 94561

LIBERTY UNION HIGH SCHOOL DISTRICT

ARCH PROJECT NO:	1739.00
DRAWN BY:	
DRAWING SCALE:	1" - 40'-0"
PTN:	61721-0068

BID SET

AUGUST 13, 2019

SHEET TITLE

SITE PLAN - FIRE PROTECTION

SHEET NUMBER

FP-1.1

DO NOT PLOT, 10/28/19, 2018 8:24:44 am
Drawing: H:\PROJ\2015\1501906\DRAWINGS\1-MA-FLS\FP-FPA2.1.DWG
Xrefs: FP1-MAIN.DWG, MA1-1-BIG.DWG, MA1-MAIN.DWG, MA5-BOND.DWG

SPRINKLERS

SYMBOL	DESCRIPTION	MANF.	MODEL	SIN	TYPE	K FACTOR	TEMP. RATING	QTY	REMARKS
●	PENDENT ON 401 EXTENSION	TYCO	TY-FRB	3231	SSP	5.6	155° F	0	(1) (2)
◉	RECESSED PENDENT	TYCO	TY-FRB	3231	SSP	5.6	155° F	83	(1) (3) (4)
○	UPRIGHT ON BRANCH LINE	TYCO	TY-FRB	3131	SSU	5.6	200° F	10	
◎	UPRIGHT ON SPRIG	TYCO	TY-FRB	3131	SSU	5.6	200° F	0	
△	SIDEWALL	TYCO	TY-FRB	3331	SSU	5.6	155° F	1	
TOTAL SPRINKLERS (THIS SHEET)								94	
TOTAL SPRINKLERS (BUILDING A)								241	

(1) FINISH TO MATCH ADJACENT MATERIAL VERIFY WITH ARCHITECT

(2) PENDENT ON 401 EXTENSION

(3) PROVIDE STYLE 10 RECESSED ESCUTCHEON. FINISH TO MATCH ADJACENT MATERIAL VERIFY WITH ARCHITECT

(4) FOR LAY IN PANEL SUSPENDED CEILINGS PROVIDE 1" ANNULAR CLEARANCE AROUND RECESSED ESCUTCHEON. CONCEAL OVERSIZE HOLE WITH VIKING 12620 EXPANSION PLATE. FINISH TO MATCH ADJACENT MATERIAL VERIFY WITH ARCHITECT

NOTES

1. ALL DIMENSIONS ARE CENTERLINE TO CENTERLINE UNLESS OTHERWISE NOTED.
2. ALL PIPE 1-1/2" AND SMALLER SHALL BE SCHEDULE 40 BLACK STEEL WITH CAST IRON THREADED FITTINGS IN ACCORDANCE WITH ANSI B16.4.
3. ALL PIPE 2" AND GREATER SHALL BE SCHEDULE 10 BLACK WITH GROOVED COUPLINGS AND WELDED OUTLETS.
4. ALL PIPE 1-1/2" AND SMALLER SHALL HAVE SUPPORT SPACING LESS THAN 12 FEET.
5. ALL PIPE 2" AND GREATER SHALL HAVE SUPPORT SPACING LESS THAN 15 FEET.
6. BRANCH LINES SHALL BE RESTRAINED AT END OF BRANCH LINE, AND AT INTERVALS NOT EXCEEDING 30 FT. SEE 4/FP-6.1, 5/FP-6.2, AND 8/FP-6.2
7. PROVIDE 1" ANNULAR CLEARANCE AT ALL SPRINKLER PENETRATIONS OF LAY IN PANEL SUSPENDED CEILINGS.

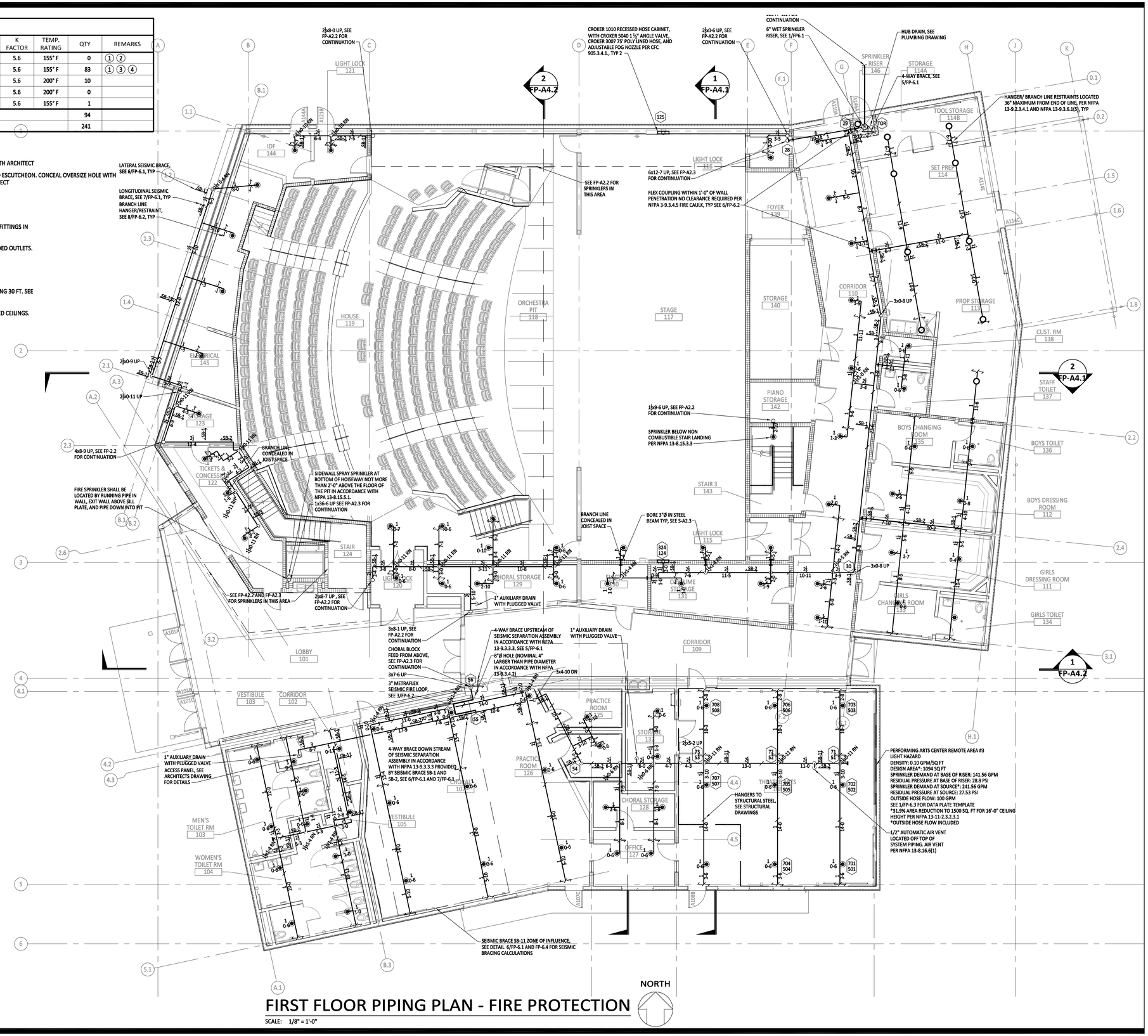

FIRST FLOOR PIPING PLAN - FIRE PROTECTION

SCALE: 1/8" = 1'-0"

NORTH

THE USE OF THESE PLANS AND SPECIFICATIONS SHALL BE RESTRICTED TO THE ORIGINAL SITE FOR WHICH THEY WERE PREPARED AND PUBLICATION THEREOF IS EXPRESSLY LIMITED TO SUCH USE. RE-USE, REPRODUCTION, OR PUBLICATION BY ANY METHOD, IN WHOLE OR IN PART, IS PROHIBITED. TITLE TO THE PLANS AND SPECIFICATIONS REMAINS WITH THE ENGINEER OF WORK AND SHALL NOT BE USED BY THE OWNER OR OTHERS ON EXTENSIONS OF THE PROJECT OR ON ANY OTHER PROJECT WITHOUT THE WRITTEN AGREEMENT WITH THE ENGINEER WITHOUT PRECAUTIONS, VISUAL CONTACT WITH THESE PLANS AND SPECIFICATIONS SHALL CONSTITUTE PRIMA FACIE EVIDENCE OF THE ACCEPTANCE OF THESE RESTRICTIONS. AXIOM ENGINEERS INC - LEE & ASSOCIATES CONSULTING ENGINEERS

QUATTROCCHI KWOK ARCHITECTS
Main Office:
636 Fifth Street, Santa Rosa, CA 95404
Pleasanton Office:
600 Main Street, Suite E,
Pleasanton, CA 94566
(707) 576-0829

www.axiomengineers.com
AXIOM ENGINEERS℠ CONSULTING ENGINEERS
22 Lower Ragsdale Dr., Suite A
Monterey, California 93940-5788
ph. (831) 646-8000
fx. (831) 646-8038
AE Project # : 20190066

REGISTERED PROFESSIONAL ENGINEER
STEVEN E. RAISON
No. M30657
EXP. JUNE 30, 2020
MECHANICAL
STATE OF CALIFORNIA

FREEDOM HIGH SCHOOL

PERFORMING ARTS AND CTE FACILITIES

1050 NEROLY RD
OAKLEY, CA 94561

LIBERTY UNION HIGH SCHOOL DISTRICT

ARCH PROJECT NO:	1739.00
DRAWN BY:	
DRAWING SCALE:	1/8" = 1'-0"
PTN:	61721-0068

BID SET

AUGUST 13, 2019

SHEET TITLE

FIRST FLOOR PIPING PLAN - FIRE PROTECTION

SHEET NUMBER

FP-A2.1

THE USE OF THESE PLANS AND SPECIFICATIONS SHALL BE RESTRICTED TO THE ORIGINAL SITE FOR WHICH THEY WERE PREPARED AND PUBLICATION THEREOF IS EXPRESSLY LIMITED TO SUCH USE. RE USE, REPRODUCTION, OR PUBLICATION BY ANY METHOD, IN WHOLE OR IN PART, IS PROHIBITED. TITLE TO THE PLANS AND SPECIFICATIONS REMAINS WITH THE ENGINEER WITHOUT PREJUDICE. VISUAL CONTACT WITH THESE PLANS AND SPECIFICATIONS SHALL CONSTITUTE PRIMA FACIE EVIDENCE OF THE ACCEPTANCE OF THESE RESTRICTIONS. AXIOM ENGINEERS INC - LEE & ASSOCIATES CONSULTING ENGINEERS

OCTOBER 29, 2019 9:34:44 am.
Drawing: H:\PROJ\2019\1201300\60\DWG\FP\MAS2 BMG.DWG, MAS2 BMG-MAS-BORD.DWG
XrefsFP2-MAIN.DWG, MAS2 BMG-MAS-BORD.DWG

SPRINKLERS

SYMBOL	DESCRIPTION	MANF.	MODEL	SIN	TYPE	K FACTOR	TEMP. RATING	QTY	REMARKS
●	PENDENT ON 401 EXTENSION	TYCO	TY-FRB	3231	SSP	5.6	155° F	0	(1) (2)
◉	RECESSED PENDENT	TYCO	TY-FRB	3231	SSP	5.6	155° F	28	(1) (3) (4)
○	UPRIGHT ON BRANCH LINE	TYCO	TY-FRB	3131	SSU	5.6	200° F	0	
◎	UPRIGHT ON SPRIG	TYCO	TY-FRB	3131	SSU	5.6	200° F	0	
△	SIDEWALL	TYCO	TY-FRB	3331	SSS	5.6	155° F	0	
TOTAL SPRINKLERS (THIS SHEET)								28	
TOTAL SPRINKLERS (BUILDING A)								241	

(1) FINISH TO MATCH ADJACENT MATERIAL VERIFY WITH ARCHITECT

(2) PENDENT ON 401 EXTENSION

(3) PROVIDE STYLE 10 RECESSED ESCUTCHEON. FINISH TO MATCH ADJACENT MATERIAL VERIFY WITH ARCHITECT

(4) FOR LAY IN PANEL SUSPENDED CEILINGS PROVIDE 1" ANNULAR CLEARANCE AROUND RECESSED ESCUTCHEON. CONCEAL OVERSIZE HOLE WITH VIKING 12620 EXPANSION PLATE. FINISH TO MATCH ADJACENT MATERIAL VERIFY WITH ARCHITECT

NOTES

1. ALL DIMENSIONS ARE CENTERLINE TO CENTERLINE UNLESS OTHERWISE NOTED.
2. ALL PIPE 1-1/2" AND SMALLER SHALL BE SCHEDULE 40 BLACK STEEL WITH CAST IRON THREADED FITTINGS IN ACCORDANCE WITH ANSI B16.4.
3. ALL PIPE 2" AND GREATER SHALL BE SCHEDULE 10 BLACK WITH GROOVED COUPLINGS AND WELDED OUTLETS.
4. ALL PIPE 1-1/2" AND SMALLER SHALL HAVE SUPPORT SPACING LESS THAN 12 FEET.
5. ALL PIPE 2" AND GREATER SHALL HAVE SUPPORT SPACING LESS THAN 15 FEET.
6. BRANCH LINES SHALL BE RESTRAINED AT END OF BRANCH LINE, AND AT INTERVALS NOT EXCEEDING 30 FT. SEE 4/FP-6.1, 5/FP-6.2, AND 8/FP-6.2
7. PROVIDE 1" ANNULAR CLEARANCE AT ALL SPRINKLER PENETRATIONS OF LAY IN PANEL SUSPENDED CEILINGS.

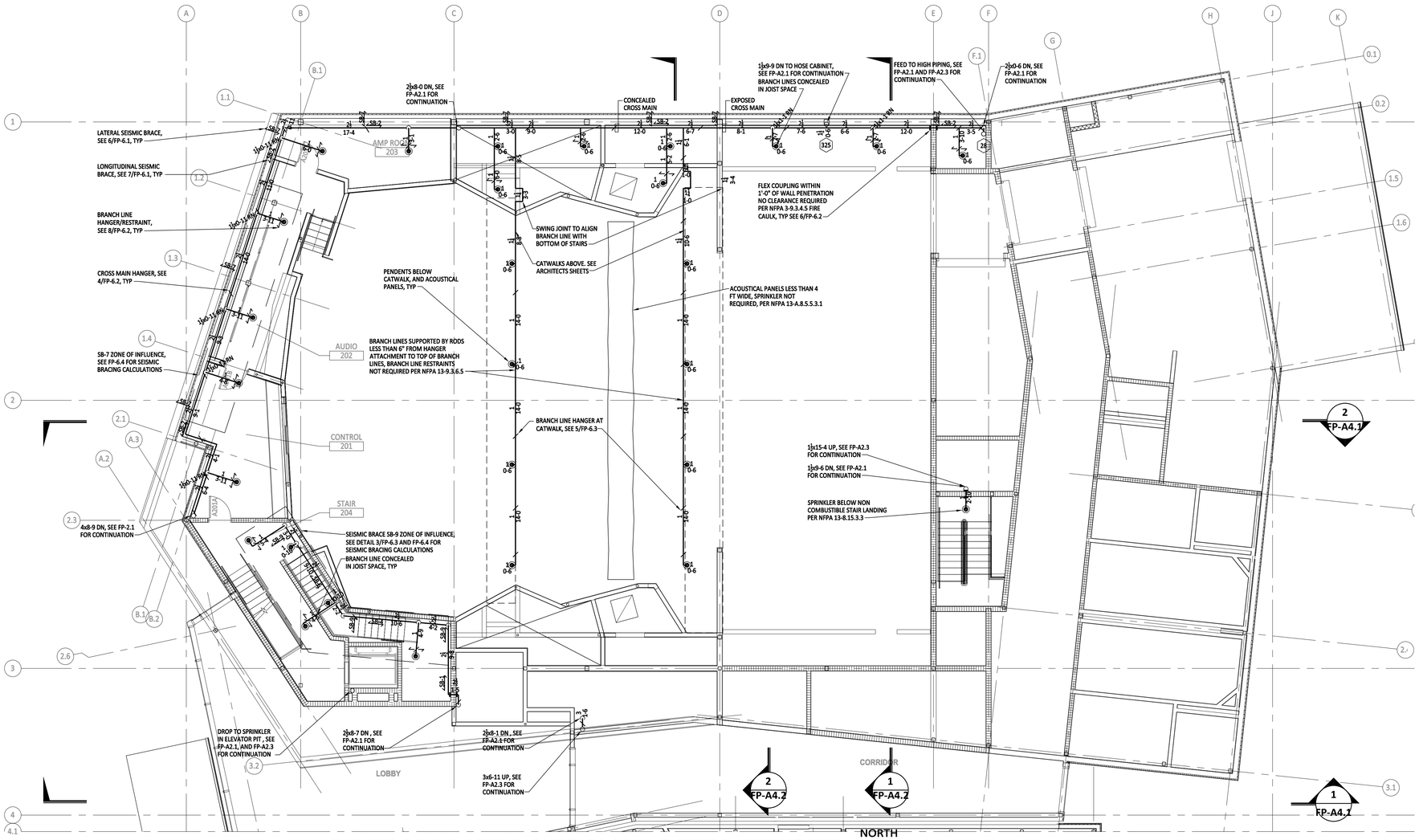

CONTROL BOOTH PIPING PLAN - FIRE PROTECTION

SCALE: 1/8" = 1'-0"

QUATTROCCHI KWOK ARCHITECTS
Main Office:
636 Fifth Street, Santa Rosa, CA 95404
Pleasanton Office:
600 Main Street, Suite E,
Pleasanton, CA 94566
(707) 576-0829

AXIOM ENGINEERS
CONSULTING ENGINEERS
www.axiomengineers.com
22 Lower Ragsdale Dr., Suite A
Monterey, California 93940-5788
ph. (831) 649-8000
fx. (831) 649-8038
AE Project # :20190066

REGISTERED PROFESSIONAL ENGINEER
STEVEN E. RAGSON
No. M30657
EXP. JUNE 30, 2020
MECHANICAL
STATE OF CALIFORNIA

FREEDOM HIGH SCHOOL

PERFORMING ARTS AND CTE FACILITIES

1050 NEROLY RD
OAKLEY, CA 94561

LIBERTY UNION HIGH SCHOOL DISTRICT

ARCH PROJECT NO:	1739.00
DRAWN BY:	
DRAWING SCALE:	1/8" = 1'-0"
PTN:	61721-0068

BID SET

AUGUST 13, 2019

SHEET TITLE

CONTROL BOOTH PIPING PLAN - FIRE PROTECTION

SHEET NUMBER

FP-A2.2

THE USE OF THESE PLANS AND SPECIFICATIONS SHALL BE RESTRICTED TO THE ORIGINAL SITE FOR WHICH THEY WERE PREPARED AND PUBLICATION THEREOF IS EXPRESSLY LIMITED TO SUCH USE. RE-USE, REPRODUCTION, OR PUBLICATION BY ANY METHOD, IN WHOLE OR IN PART, IS PROHIBITED. TITLE TO THE PLANS AND SPECIFICATIONS REMAINS WITH THE ENGINEER WHETHER THE PROJECT FOR WHICH THEY ARE MADE IS EXECUTED OR NOT. THE PLANS AND SPECIFICATIONS ARE NOT TO BE CHANGED OR COPIED IN ANY FORM OR MANNER WHATSOEVER, NOR ARE THEY TO BE ASSIGNED TO ANY THIRD PARTY, WITHOUT FIRST OBTAINING THE EXPRESS WRITTEN PERMISSION AND CONSENT OF AXIOM ENGINEERS INC - LEE & ASSOCIATES CONSULTING ENGINEERS. VISUAL CONTACT WITH THESE PLANS AND SPECIFICATIONS SHALL CONSTITUTE PRIMA FACIE EVIDENCE OF THE ACCEPTANCE OF THESE RESTRICTIONS. AXIOM ENGINEERS INC - LEE & ASSOCIATES CONSULTING ENGINEERS

OCTOBER 29, 2019 9:34:44 a.m.
Drawing: H:\PROJ\2019\1201900\Drawings\Architectural\FP-A2.3 TECH LEDGE PIPING PLAN - FIRE PROTECTION.dwg
Xrefs:FP3-MAIN.DWG; MAS3-BKG.DWG; MAS-BORD.DWG

SPRINKLERS

SYMBOL	DESCRIPTION	MANF.	MODEL	SIN	TYPE	K FACTOR	TEMP. RATING	QTY	REMARKS
●	PENDENT ON 401 EXTENSION	TYCO	TY-FRB	3231	SSP	5.6	155° F	0	(1) (2)
◉	RECESSED PENDENT	TYCO	TY-FRB	3231	SSP	5.6	155° F	19	(1) (3) (4)
○	UPRIGHT ON BRANCH LINE	TYCO	TY-FRB	3131	SSU	5.6	200° F	70	
◎	UPRIGHT ON SPRIG	TYCO	TY-FRB	3131	SSU	5.6	200° F	30	
△	SIDEWALL	TYCO	TY-FRB	3331	SSS	5.6	155° F	0	
TOTAL SPRINKLERS (THIS SHEET)								119	
TOTAL SPRINKLERS (BUILDING A)								241	

(1) FINISH TO MATCH ADJACENT MATERIAL VERIFY WITH ARCHITECT

(2) PENDENT ON 401 EXTENSION

(3) PROVIDE STYLE 10 RECESSED ESCUTCHEON. FINISH TO MATCH ADJACENT MATERIAL VERIFY WITH ARCHITECT

(4) FOR LAY IN PANEL SUSPENDED CEILINGS PROVIDE 1" ANNULAR CLEARANCE AROUND RECESSED ESCUTCHEON. CONCEAL OVERSIZE HOLE WITH VIKING 12620 EXPANSION PLATE. FINISH TO MATCH ADJACENT MATERIAL VERIFY WITH ARCHITECT

NOTES

1. ALL DIMENSIONS ARE CENTERLINE TO CENTERLINE UNLESS OTHERWISE NOTED.
2. ALL PIPE 1-1/2" AND SMALLER SHALL BE SCHEDULE 40 BLACK STEEL WITH CAST IRON THREADED FITTINGS IN ACCORDANCE WITH ANSI B16.4.
3. ALL PIPE 2" AND GREATER SHALL BE SCHEDULE 10 BLACK WITH GROOVED COUPLINGS AND WELDED OUTLETS.
4. ALL PIPE 1-1/2" AND SMALLER SHALL HAVE SUPPORT SPACING LESS THAN 12 FEET.
5. ALL PIPE 2" AND GREATER SHALL HAVE SUPPORT SPACING LESS THAN 15 FEET.
6. BRANCH LINES SHALL BE RESTRAINED AT END OF BRANCH LINE, AND AT INTERVALS NOT EXCEEDING 30 FT. SEE 4/FP-6.1, 5/FP-6.2, AND 8/FP-6.2
7. PROVIDE 1" ANNULAR CLEARANCE AT ALL SPRINKLER PENETRATIONS OF LAY IN PANEL SUSPENDED CEILINGS.

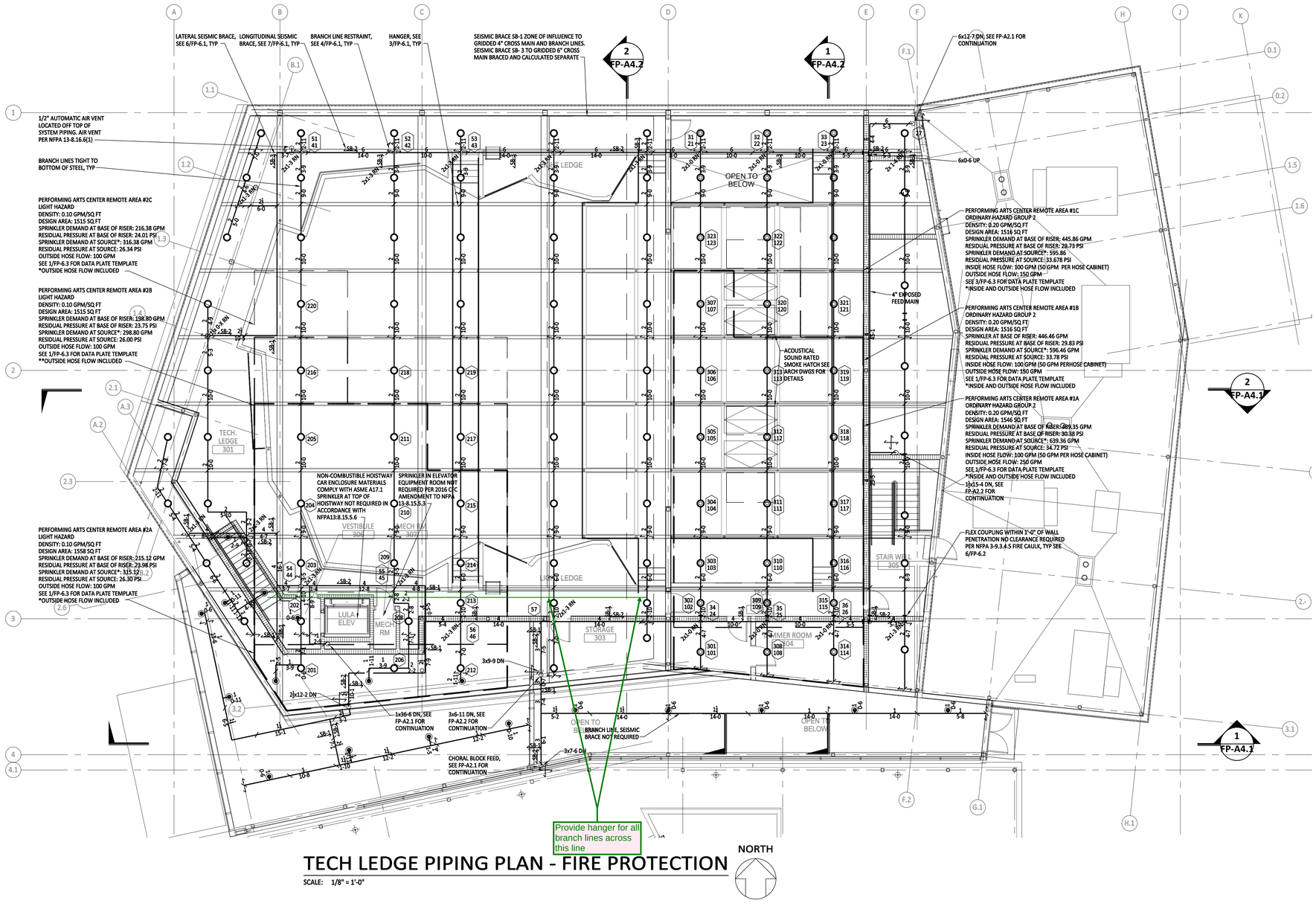

TECH LEDGE PIPING PLAN - FIRE PROTECTION

SCALE: 1/8" = 1'-0"

QUATTROCCHI KWOK ARCHITECTS
Main Office:
636 Fifth Street, Santa Rosa, CA 95404
Pleasanton Office:
600 Main Street, Suite E.
Pleasanton, CA 94566
(707) 576-0829

AXIOM ENGINEERS
CONSULTING ENGINEERS
www.axiomengineers.com
22 Lower Ragsdale Dr., Suite A
Monterey, California 93940-5788
ph. (831) 649-8000
fx. (831) 649-8038
AE Project # :20190066

REGISTERED PROFESSIONAL ENGINEER
STEVEN E. RAISON
No. M30657
EXP. JUNE 30, 2020
MECHANICAL
STATE OF CALIFORNIA

FREEDOM HIGH SCHOOL

PERFORMING ARTS AND CTE FACILITIES

1050 NEROLY RD
OAKLEY, CA 94561

LIBERTY UNION HIGH SCHOOL DISTRICT

ARCH PROJECT NO:	1739.00
DRAWN BY:	
DRAWING SCALE:	1/8" = 1'-0"
PTN:	61721-0068

BID SET

AUGUST 13, 2019

SHEET TITLE

TECH LEDGE PIPING PLAN - FIRE PROTECTION

SHEET NUMBER

FP-A2.3



FIRST FLOOR CEILING PLAN - FIRE PROTECTION

SCALE: 1/8" = 1'-0"

QUATTROCCHI KWOK ARCHITECTS

Main Office:
636 Fifth Street, Santa Rosa, CA 95404
Pleasanton Office:
600 Main Street, Suite E,
Pleasanton, CA 94566
(707) 576-0829

www.axiomengineers.com
ph. (831) 649-8000
fx. (831) 649-8038
AXIOM ENGINEERS℠ CONSULTING ENGINEERS
22 Lower Ragsdale Dr., Suite A
Monterey, California 93940-5788
AE Project # :20190066

REGISTERED PROFESSIONAL ENGINEER
STEVEN E. RAWSON
No. M30657
EXP. JUNE 30, 2020
MECHANICAL
STATE OF CALIFORNIA

FREEDOM HIGH SCHOOL

PERFORMING ARTS AND CTE FACILITIES

1050 NEROLY RD
OAKLEY, CA 94561

LIBERTY UNION HIGH SCHOOL DISTRICT

ARCH PROJECT NO:	1739.00
DRAWN BY:	
DRAWING SCALE:	1/8" = 1'-0"
PTN:	61721-0068

BID SET

AUGUST 13, 2019

SHEET TITLE

FIRST FLOOR CEILING PLAN - FIRE PROTECTION

SHEET NUMBER

FP-A3.1

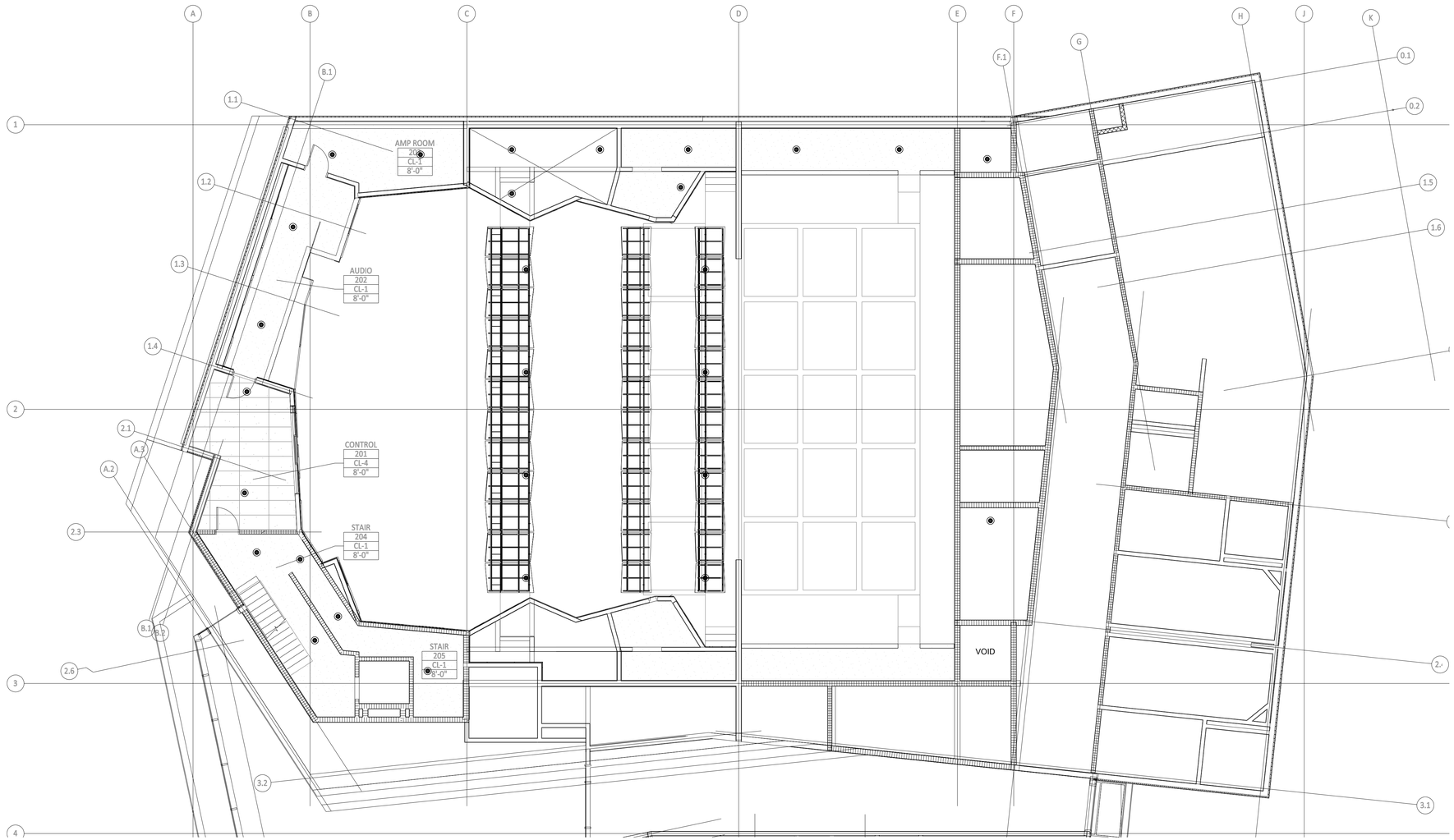

CONTROL BOOTH CEILING PLAN - FIRE PROTECTION

SCALE: 1/8" = 1'-0"

NORTH

QUATTROCCHI KWOK ARCHITECTS

Main Office:
636 Fifth Street, Santa Rosa, CA 95404
Pleasanton Office:
600 Main Street, Suite E,
Pleasanton, CA 94566
(707) 576-0829

www.axiomengineers.com
ph. (831) 649-8000
fx. (831) 649-8038
AXIOM ENGINEERS℠ CONSULTING ENGINEERS
22 Lower Ragsdale Dr., Suite A
Monterey, California 93940-5788
AE Project # : 20190066

REGISTERED PROFESSIONAL ENGINEER
STEVEN E. RAWSON
No. M30657
EXP. JUNE 30, 2020
MECHANICAL
STATE OF CALIFORNIA

FREEDOM HIGH SCHOOL

PERFORMING ARTS AND CTE FACILITIES

1050 NEROLY RD
OAKLEY, CA 94561

LIBERTY UNION HIGH SCHOOL DISTRICT

ARCH PROJECT NO:	1739.00
DRAWN BY:	
DRAWING SCALE:	1/8" = 1'-0"
PTN:	61721-0068

BID SET

AUGUST 13, 2019

SHEET TITLE

CONTROL BOOTH CEILING PLAN - FIRE PROTECTION

SHEET NUMBER

FP-A3.2

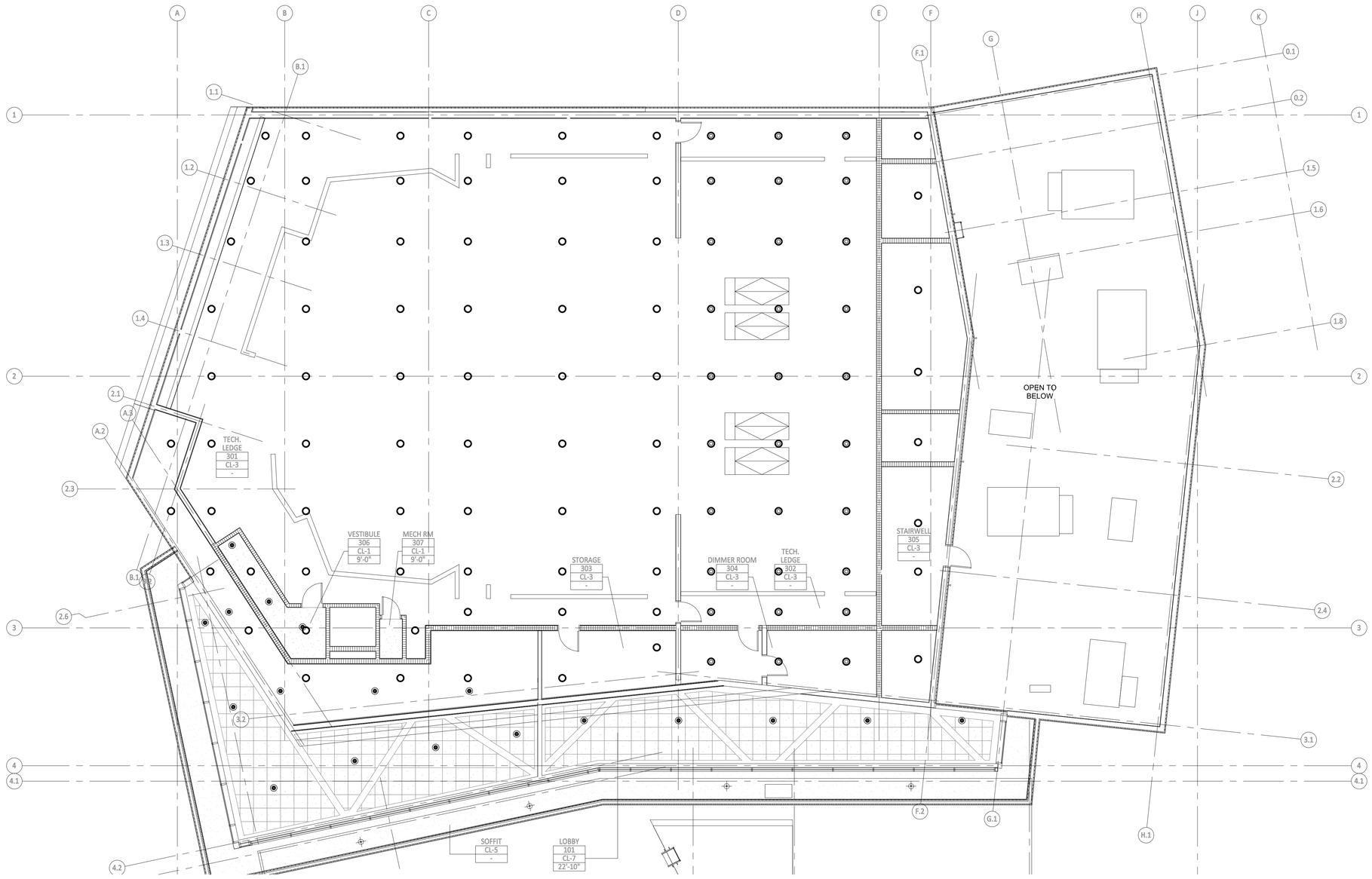

TECH LEDGE CEILING PLAN - FIRE PROTECTION

SCALE: 1/8" = 1'-0"

NORTH

QUATTROCCHI KWOK ARCHITECTS

Main Office:
636 Fifth Street, Santa Rosa, CA 95404
Pleasanton Office:
600 Main Street, Suite E,
Pleasanton, CA 94566
(707) 576-0829

AXIOM ENGINEERS
CONSULTING ENGINEERS
www.axiomengineers.com
ph. (831) 649-8000
fx. (831) 649-8038
22 Lower Ragsdale Dr., Suite A
Monterey, California 93940-5788
AE Project # : 20190066

REGISTERED PROFESSIONAL ENGINEER
STEVEN E. RAWSON
No. M30657
EXP. JUNE 30, 2020
MECHANICAL
STATE OF CALIFORNIA

FREEDOM HIGH SCHOOL

PERFORMING ARTS AND CTE FACILITIES

1050 NEROLY RD
OAKLEY, CA 94561

LIBERTY UNION HIGH SCHOOL DISTRICT

ARCH PROJECT NO:	1739.00
DRAWN BY:	
DRAWING SCALE:	1/8" = 1'-0"
PTN:	61721-0068

BID SET

AUGUST 13, 2019

SHEET TITLE

TECH LEDGE CEILING PLAN - FIRE PROTECTION

SHEET NUMBER

FP-A3.3

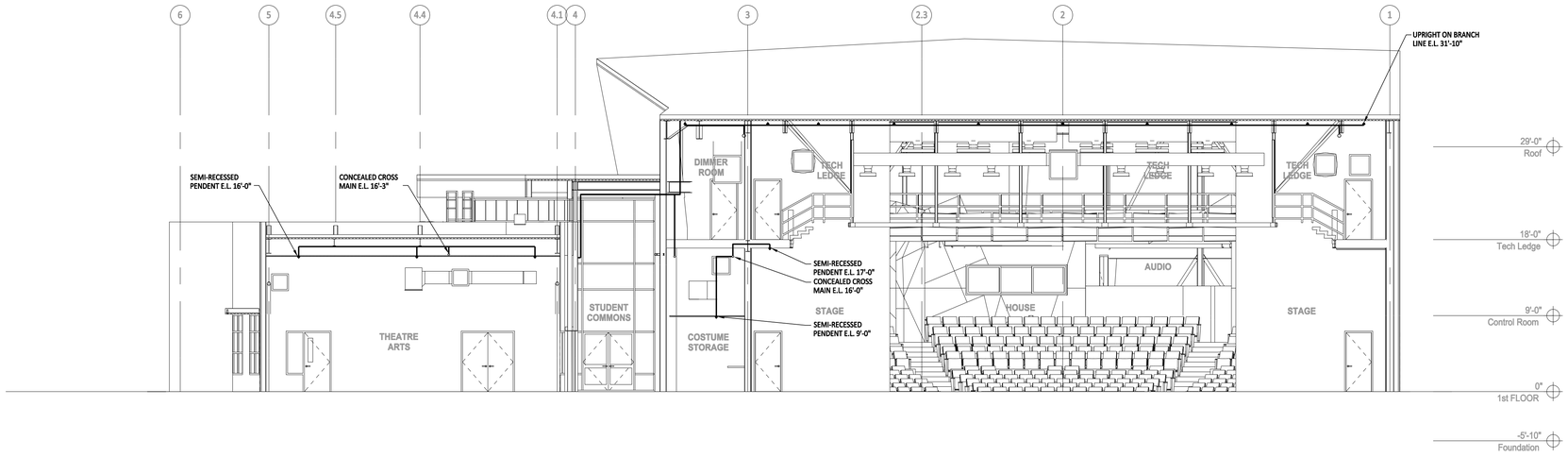

1
FP-A4.1

BUILDING SECTION THROUGH STAGE - FIRE PROTECTION

SCALE: 1/8" = 1'-0"

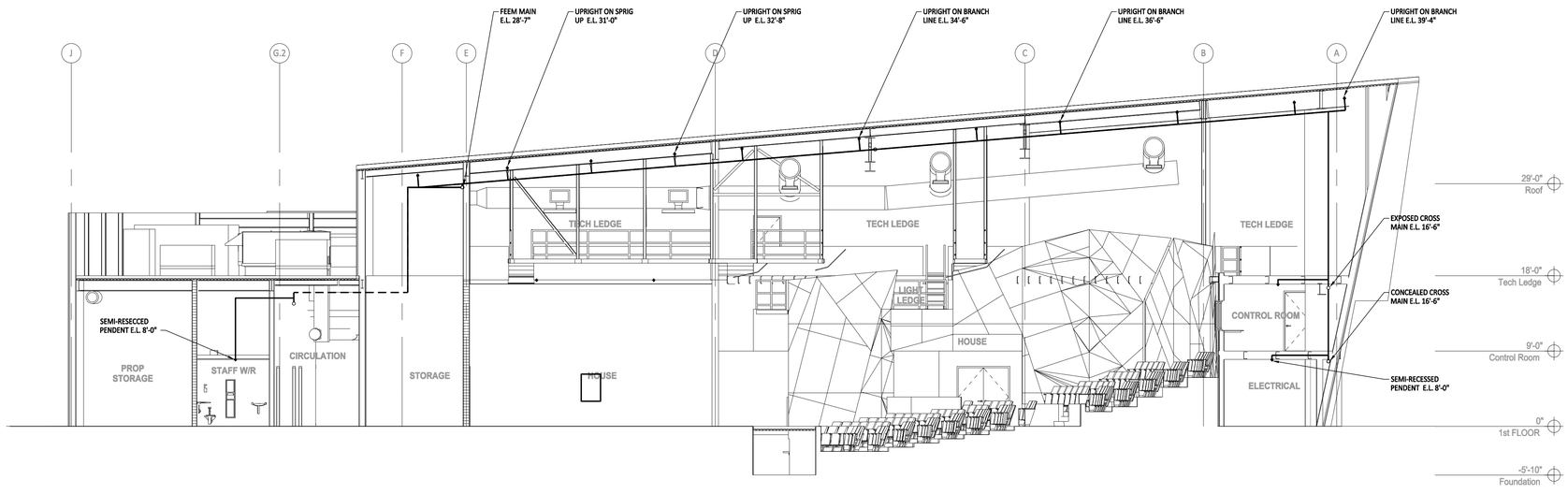

2
FP-A4.1

BUILDING SECTION THROUGH THEATER HOUSE - FIRE PROTECTION

SCALE: 1/8" = 1'-0"

QUATTROCCHI KWOK ARCHITECTS

Main Office:
636 Fifth Street, Santa Rosa, CA 95404
Pleasanton Office:
600 Main Street, Suite E,
Pleasanton, CA 94566
(707) 576-0829

AXIOM ENGINEERS℠ CONSULTING ENGINEERS
22 Lower Ragsdale Dr., Suite A
Monterey, California 93940-5788
ph. (831) 649-8000
fx. (831) 649-8038
www.axiomengineers.com
AE Project # :20190066

REGISTERED PROFESSIONAL ENGINEER
STEVEN E. RAWSON
No. M30657
EXP. JUNE 30, 2020
MECHANICAL
STATE OF CALIFORNIA

FREEDOM HIGH SCHOOL

PERFORMING ARTS AND CTE FACILITIES

1050 NEROLY RD
OAKLEY, CA 94561

LIBERTY UNION HIGH SCHOOL DISTRICT

ARCH PROJECT NO:	1739.00
DRAWN BY:	
DRAWING SCALE:	1/8" = 1'-0"
PTN:	61721-0068

BID SET

AUGUST 13, 2019

SHEET TITLE

SECTIONS - FIRE PROTECTION

SHEET NUMBER

FP-A4.1

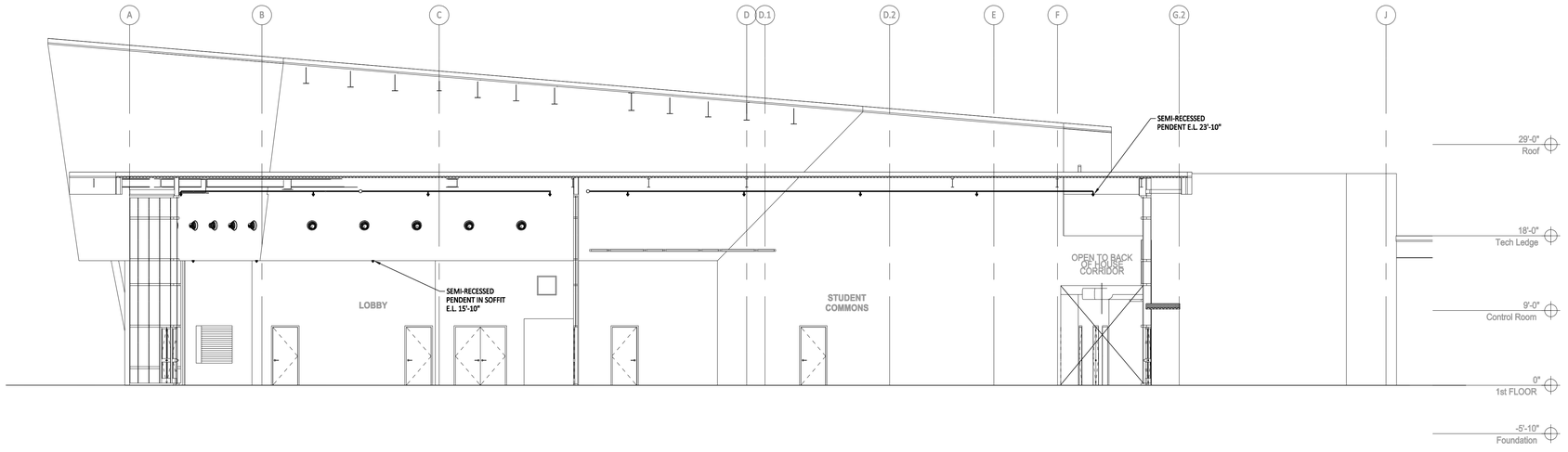

1 FP-A4.2

BUILDING SECTION THROUGH LOBBY - FIRE PROTECTION

SCALE: 1/8" = 1'-0"

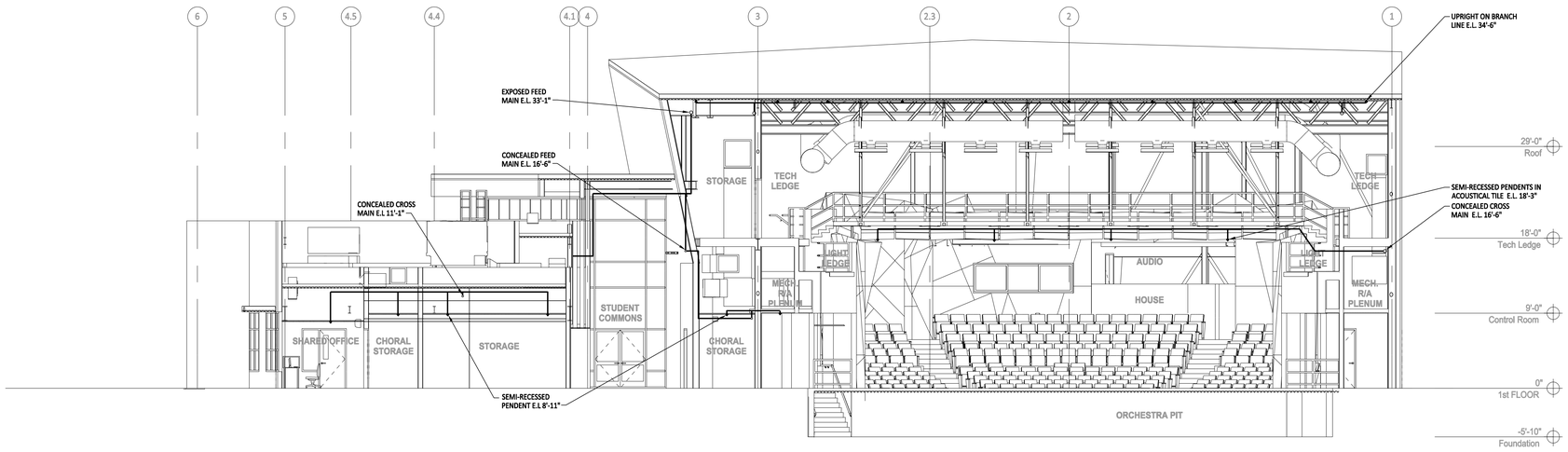

2 FP-A4.2

BUILDING SECTION THROUGH PIT - FIRE PROTECTION

SCALE: 1/8" = 1'-0"

QUATTROCCHI KWOK ARCHITECTS

Main Office:
636 Fifth Street, Santa Rosa, CA 95404
Pleasanton Office:
600 Main Street, Suite E,
Pleasanton, CA 94566
(707) 576-0829

www.axiomengineers.com
ph. (831) 649-8000
fx. (831) 649-8038
AXIOM ENGINEERS CONSULTING ENGINEERS
22 Lower Ragsdale Dr., Suite A
Monterey, California 93940-5788
AE Project # : 20190066

REGISTERED PROFESSIONAL ENGINEER
STEVEN E. RAWSON
No. M30657
EXP. JUNE 30, 2020
MECHANICAL
STATE OF CALIFORNIA

FREEDOM HIGH SCHOOL

PERFORMING ARTS AND CTE FACILITIES

1050 NEROLY RD
OAKLEY, CA 94561

LIBERTY UNION HIGH SCHOOL DISTRICT

ARCH PROJECT NO:	1739.00
DRAWN BY:	
DRAWING SCALE:	1/8" = 1'-0"
PTN:	61721-0068

BID SET

AUGUST 13, 2019

SHEET TITLE

SECTIONS - FIRE PROTECTION

SHEET NUMBER

FP-A4.2

THE USE OF THESE PLANS AND SPECIFICATIONS SHALL BE RESTRICTED TO THE ORIGINAL SITE FOR WHICH THEY WERE PREPARED AND PUBLICATION THEREOF IS EXPRESSLY LIMITED TO SUCH USE. RE-USE, REPRODUCTION, OR PUBLICATION BY ANY METHOD, IN WHOLE OR IN PART, IS PROHIBITED. TITLE TO THE PLANS AND SPECIFICATIONS REMAINS WITH THE ENGINEER WITHOUT PREJUDICE. VISUAL CONTACT WITH THESE PLANS AND SPECIFICATIONS SHALL CONSTITUTE PRIMA FACIE EVIDENCE OF THE ACCEPTANCE OF THESE RESTRICTIONS. AXIOM ENGINEERS INC - LEE & ASSOCIATES CONSULTING ENGINEERS

OCTOBER 29, 2019 9:34:44 a.m.
Drawing: H:\PROJ\2019\1201006\DWG\ARCH\FP\FP-B2.1.DWG
Xref:FP-CTE MAIN; MASCTE BKG.DWG; MAS-BORD.DWG

SPRINKLERS

SYMBOL	DESCRIPTION	MANF.	MODEL	SIN	TYPE	K FACTOR	TEMP. RATING	QTY	REMARKS
◉	RECESSED PENDENT	TYCO	TY-FRB	3231	SSP	5.6	155° F	17	(1) (2) (3)
O	UPRIGHT ON BRANCH LINE	TYCO	TY-FRB	3131	SSU	5.6	200° F	39	
△	SIDEWALL	TYCO	TY-FRB	3331	SSS	5.6	200° F	3	
TOTAL SPRINKLERS (THIS SHEET)								59	
TOTAL SPRINKLERS (BUILDING B)								59	

(1) FINISH TO MATCH ADJACENT MATERIAL VERIFY WITH ARCHITECT

(2) PROVIDE STYLE 10 RECESSED ESCUTCHEON. FINISH TO MATCH ADJACENT MATERIAL VERIFY WITH ARCHITECT

(3) FOR LAY IN PANEL SUSPENDED CEILINGS PROVIDE 1" ANNULAR CLEARANCE AROUND RECESSED ESCUTCHEON. CONCEAL OVERSIZE HOLE WITH VIKING 12620 EXPANSION PLATE. FINISH TO MATCH ADJACENT MATERIAL VERIFY WITH ARCHITECT

NOTES

1. ALL DIMENSIONS ARE CENTERLINE TO CENTERLINE UNLESS OTHERWISE NOTED.
2. ALL PIPE 1-1/2" AND SMALLER SHALL BE SCHEDULE 40 BLACK STEEL WITH CAST IRON THREADED FITTINGS IN ACCORDANCE WITH ANSI B16.4.
3. ALL PIPE 2" AND GREATER SHALL BE SCHEDULE 10 BLACK WITH GROOVED COUPLINGS AND WELDED OUTLETS.
4. ALL PIPE 1-1/2" AND SMALLER SHALL HAVE SUPPORT SPACING LESS THAN 12 FEET.
5. ALL PIPE 2" AND GREATER SHALL HAVE SUPPORT SPACING LESS THAN 15 FEET.
6. BRANCH LINES SHALL BE RESTRAINED AT END OF BRANCH LINE, AND AT INTERVALS NOT EXCEEDING 30 FT. SEE 1/FP-6.2
7. PROVIDE 1" ANNULAR CLEARANCE AT ALL SPRINKLER PENETRATIONS OF LAY IN PANEL SUSPENDED CEILINGS.

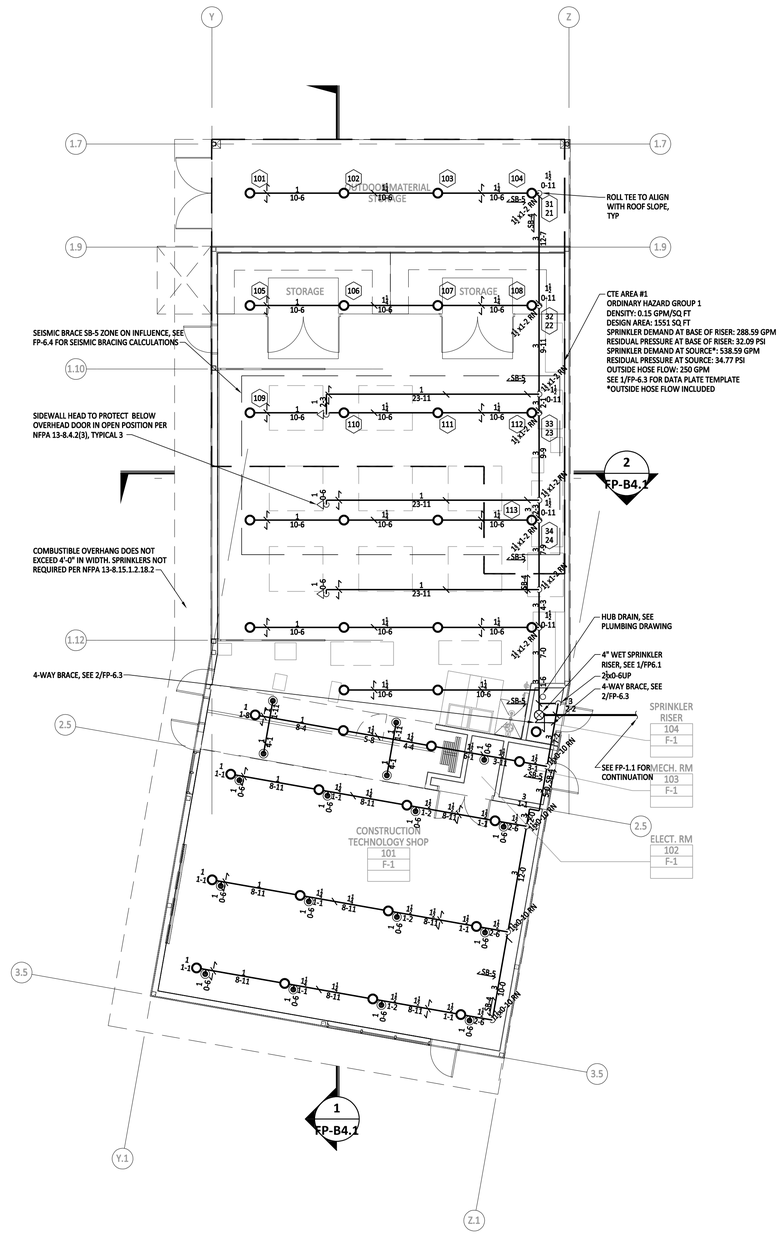

CTE BUILDING PIPING PLAN - FIRE PROTECTION

SCALE: 1/8" = 1'-0"

NORTH

QUATTROCCHI KWOK ARCHITECTS
Main Office:
636 Fifth Street, Santa Rosa, CA 95404
Pleasanton Office:
600 Main Street, Suite E,
Pleasanton, CA 94566
(707) 576-0829

AXIOM ENGINEERS
CONSULTING ENGINEERS
www.axiomengineers.com
22 Lower Ragsdale Dr., Suite A
Monterey, California 93940-5788
ph. (831) 649-8000
fx. (831) 649-8038
AE Project # :20190066

REGISTERED PROFESSIONAL ENGINEER
STEVEN E. RAWSON
No. M30657
EXP. JUNE 30, 2020
MECHANICAL
STATE OF CALIFORNIA

FREEDOM HIGH SCHOOL

PERFORMING ARTS AND CTE FACILITIES

1050 NEROLY RD
OAKLEY, CA 94561

LIBERTY UNION HIGH SCHOOL DISTRICT

ARCH PROJECT NO:	1739.00
DRAWN BY:	
DRAWING SCALE:	1/8" = 1'-0"
PTN:	61721-0068

BID SET

AUGUST 13, 2019

SHEET TITLE

CTE BUILDING PIPING PLAN - FIRE PROTECTION

SHEET NUMBER

FP-B2.1

THE USE OF THESE PLANS AND SPECIFICATIONS SHALL BE RESTRICTED TO THE ORIGINAL SITE FOR WHICH THEY WERE PREPARED AND PUBLICATION THEREOF IS EXPRESSLY LIMITED TO SUCH USE. RE-USE, REPRODUCTION, OR PUBLICATION BY ANY METHOD, IN WHOLE OR IN PART, IS PROHIBITED. TITLE TO THE PLANS AND SPECIFICATIONS REMAINS WITH THE ENGINEER WITHOUT PREJUDICE. VISUAL CONTACT WITH THESE PLANS AND SPECIFICATIONS SHALL CONSTITUTE PRIMA FACIE EVIDENCE OF THE ACCEPTANCE OF THESE RESTRICTIONS. AXIOM ENGINEERS INC - LEE & ASSOCIATES CONSULTING ENGINEERS

OCTOBER 29, 2019 9:34:44 a.m.
Drawing: H:\PROJ\2019\19-20350\06\plan\mep\FP-B3.1.dwg
Xref's: MASCTE-BKG.DWG

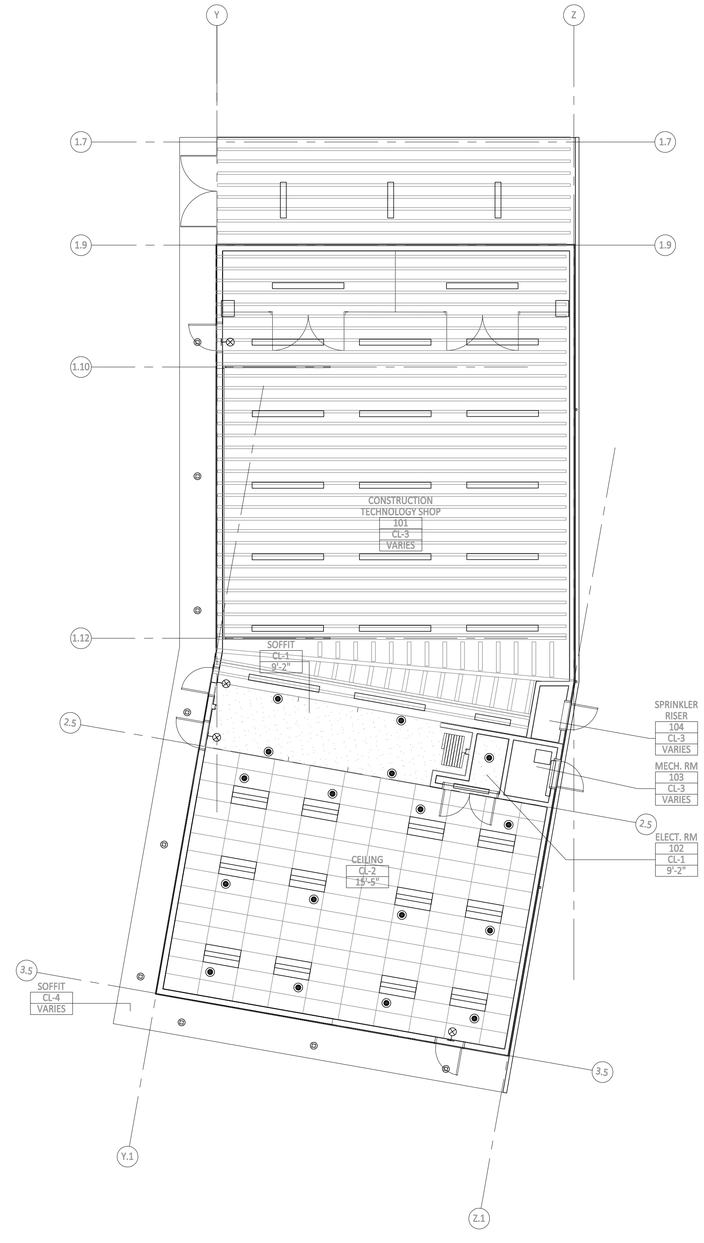

CTE BUILDING CEILING PLAN - FIRE PROTECTION

SCALE: 1/8" = 1'-0"

NORTH

QUATTROCCHI KWOK ARCHITECTS
Main Office:
636 Fifth Street, Santa Rosa, CA 95404
Pleasanton Office:
600 Main Street, Suite E,
Pleasanton, CA 94566
(707) 576-0829

AXIOM ENGINEERS CONSULTING ENGINEERS
www.axiomengineers.com
22 Lower Ragsdale Dr., Suite A
Monterey, California 93940-5788
ph. (831) 649-8000
fx. (831) 649-8038
AE Project # :20190066

REGISTERED PROFESSIONAL ENGINEER
STEVEN E. RAWSON
No. M30657
EXP. JUNE 30, 2020
MECHANICAL
STATE OF CALIFORNIA

FREEDOM HIGH SCHOOL

PERFORMING ARTS AND CTE FACILITIES

1050 NEROLY RD
OAKLEY, CA 94561

LIBERTY UNION HIGH SCHOOL DISTRICT

ARCH PROJECT NO:	1739.00
DRAWN BY:	
DRAWING SCALE:	1/8" = 1'-0"
PTN:	61721-0068

BID SET

AUGUST 13, 2019

SHEET TITLE

CTE BUILDING CEILING PLAN - FIRE PROTECTION

SHEET NUMBER

FP-B3.1

THE USE OF THESE PLANS AND SPECIFICATIONS SHALL BE RESTRICTED TO THE ORIGINAL SITE FOR WHICH THEY WERE PREPARED AND PUBLICATION THEREOF IS EXPRESSLY LIMITED TO SUCH USE. RE-USE, REPRODUCTION, OR PUBLICATION BY ANY METHOD, IN WHOLE OR IN PART, IS PROHIBITED. TITLE TO THE PLANS AND SPECIFICATIONS REMAINS WITH THE ENGINEER WITHOUT PREJUDICE. VISUAL CONTACT WITH THESE PLANS AND SPECIFICATIONS SHALL CONSTITUTE PRIMA FACIE EVIDENCE OF THE ACCEPTANCE OF THESE RESTRICTIONS. AXIOM ENGINEERS INC - LEE & ASSOCIATES CONSULTING ENGINEERS

OCTOBER 29, 2018 9:34:44 a.m.
Drawing: H:\PROJ\2015\15100060\DWG\MECH\FP-B4.1.DWG
Xrefs: SEC-BKG.DWG, SEC-MAIN.DWG

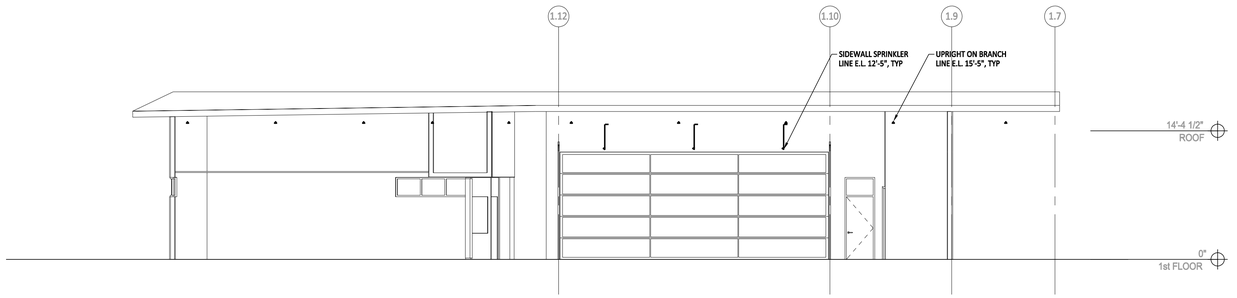

1
FP-B4.1

LONGITUDINAL SECTION THROUGH CTE BUILDING - FIRE PROTECTION

SCALE: 1/8" = 1'-0"

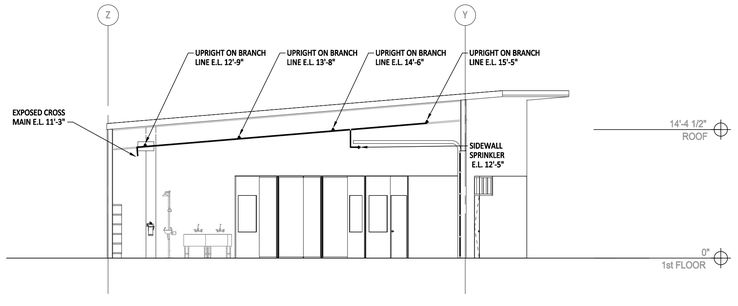

2
FP-B4.1

TRANSVERSE SECTION THROUGH BUILDING - FIRE PROTECTION

SCALE: 1/8" = 1'-0"

QUATTROCCHI KWOK
ARCHITECTS
Main Office:
636 Fifth Street, Santa Rosa, CA 95404
Pleasanton Office:
600 Main Street, Suite E,
Pleasanton, CA 94566
(707) 576-0829

AXIOM ENGINEERS
CONSULTING ENGINEERS
www.axiomengineers.com
22 Lower Ragsdale Dr., Suite A
Monterey, California 93940-5788
ph. (831) 649-8000
fx. (831) 649-8038
AE Project # : 20150066

REGISTERED PROFESSIONAL ENGINEER
STEVEN E. RAWSON
No. M30657
EXP. JUNE 30, 2020
MECHANICAL
STATE OF CALIFORNIA

FREEDOM HIGH SCHOOL

PERFORMING ARTS AND CTE FACILITIES

1050 NEROLY RD
OAKLEY, CA 94561

LIBERTY UNION HIGH SCHOOL DISTRICT

ARCH PROJECT NO:	1739.00
DRAWN BY:	
DRAWING SCALE:	1/8" = 1'-0"
PTN:	61721-0068

BID SET

AUGUST 13, 2019

SHEET TITLE

SECTIONS - FIRE PROTECTION

SHEET NUMBER

FP-B4.1

THE USE OF THESE PLANS AND SPECIFICATIONS SHALL BE RESTRICTED TO THE ORIGINAL SITE FOR WHICH THEY WERE PREPARED AND PUBLICATION THEREOF IS EXPRESSLY LIMITED TO SUCH USE. RE-USE, REPRODUCTION, OR PUBLICATION BY ANY METHOD, IN WHOLE OR IN PART, IS PROHIBITED. TITLE TO THE PLANS AND SPECIFICATIONS REMAINS WITH THE ENGINEER OF RECORD AND VISUAL CONTACT WITH THESE PLANS AND SPECIFICATIONS SHALL CONSTITUTE PRIMA FACIE EVIDENCE OF THE ACCEPTANCE OF THESE RESTRICTIONS. AXIOM ENGINEERS INC - LEE & ASSOCIATES CONSULTING ENGINEERS

Drawing: H:\PROJ\2019\20190500.job\revit\sheets\FP-6.1.dwg
10/7/2019 9:29:39 AM
Xrefs: No Xrefs found

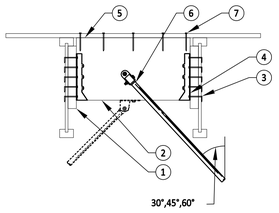

KEY NOTES:

1. 2X12 X 1'-0" FILLER BLOCK.
2. 4X12 DOUGLASS FIR HANGER BLOCK.
3. ATTACH HANGER ASSEMBLY WITH TEN 10D COMMON NAILS CLINCHED
4. SIMPSON STRONG-TIE U410 HANGER (OR EQUIVALENT).
5. GLUED SURFACE
6. SEE 11/FP-6.2 OR 12/FP-6.2 FOR BRACE
7. 10D COMMON NAIL AT 6" ON CENTER

ALLOWABLE HORIZONTAL SEISMIC LOADS (LBS)
(REDBUILT SPRINKLER SYSTEM INSTALLATION GUIDE)

SPECIES	ANGLE TO VERTICAL (Θ)		
	30°	45°	60°
DF	400	690	1195

ALLOWABLE HORIZONTAL SEISMIC LOADS (LBS)
(WEYERHAEUSER FIRE RATED ASSEMBLIES AND SPRINKLER SYSTEM TJ-1500)

SPECIES	ANGLE TO VERTICAL (Θ)		
	30°	45°	60°
DF	465	720	980

- LOADS ARE BASED ON THE CONTROLLING CONNECTION TO THE JOIST.
- THE CAPACITY OF THE BRACE FASTENER TO THE WOOD BLOCK MAY LIMIT THE CAPACITY OF THE DETAIL (SEE NFPA 13).
- LOADS INCLUDE A 1.60 DURATION OF LOAD FACTOR ADJUSTMENT

GENERAL NOTES:
BEFORE INSTALLING, TOP EDGE OF 4X BLOCKING WITH A SUBFLOOR ADHESIVE THAT MEETS THE REQUIREMENTS OF ASTM D 3498. FOLLOW MANUFACTURES'S RECOMMENDATIONS.

GLUED SURFACES MUST BE CLEAN AND DUST FREE.

ATTACHED 4X HANGER BLOCK BY NAILING THROUGH EACH HANGER, FILLER BLOCK, AND TJI JOIST WEB WITH TEN 10 COMMON NAILS AND CLINCHED.

FOR LOADS PERPENDICULAR TO JOISTS, THE BRACE MUST BE LOCATED A DISTANCE OF AT LEAST 7X THE HOLE DIAMETER USED FOR BRACE ATTACHMENT, MEASURED FROM THE END OF THE BLOCK.

FOR LOADS PARALLEL TO JOIST, THE BRACE MUST BE ATTACHED TO THE UPPER HALF OF THE 4X BLOCKING. THE SAME END AND EDGE DISTANCE AS THOSE NOTED ABOVE FOR LOADS PERPENDICULAR TO JOIST MUST ALSO BE MAINTAINED.

MAINTAIN A 4-HOLE-DIAMETER DISTANCE FROM ALL OTHER EDGES. FOR LOADS PARALLEL TO JOIST, THE BRACE MUST BE ATTACHED TO THE UPPER HALF OF THE 4X BLOCKING.

10 / FP-6.1 BRACE WITH NAILED BLOCKING

NO SCALE

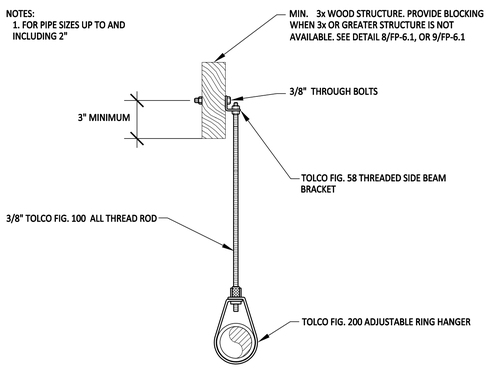

11 / FP-6.1 RING HANGER

NO SCALE

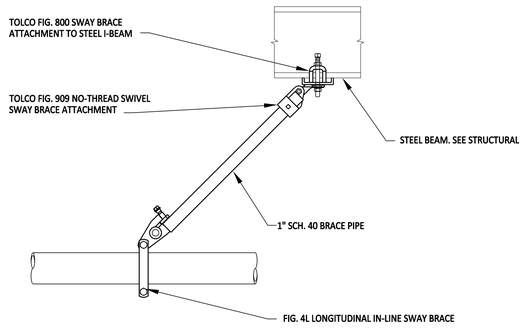

LONGITUDINAL BRACE

7 / FP-6.1 SEISMIC BRACE SB-2

NO SCALE

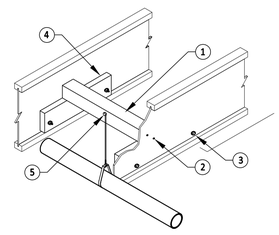

MAIN PERPENDICULAR OR PARALLEL TO TJI
(FOR PIPE SIZES UP TO 6" WITH A MAXIMUM SUPPORT SPACING OF 15 FEET)

KEY NOTES:

1. 4x6 DOUGLAS FIR NO. 2 WOOD HANGER BLOCK AS REQUIRED
2. TWO 16D COMMON NAILS
3. TWO $\frac{3}{4}$" DIAMETER MACHINE BOLTS PER JOISTS WITH 1" WASHERS-CINCH TIGHT
4. 2X6 X 18" LONG MINIMUM
5. SEE DETAIL 10/FP-6.2 FOR THROUGH BOLT, SIDE BEAM CLIP AND RING HANGER (LOCATE FASTENER CENTERED BETWEEN TRUSSES)

8 / FP-6.1 STRUCTURE ATTACHMENT

NO SCALE

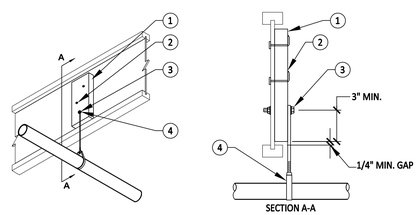

MAIN PERPENDICULAR OR PARALLEL TO TJI
(AT MAXIMUM HANGER SPACING, MAX. PIPE SIZE IS 2" WITH A 3/8" MACHINE BOLT, OR 4" WITH 1/2" MACHINE BOLT)

KEY NOTES:

1. 2x6 DOUGLAS FIR NO. 2 WOOD HANGER BLOCK AS REQUIRED, GRAIN ORIENTED VERTICALLY WITH MINIMUM 1/4" GAP BETWEEN BLOCK AND FLANGE.
2. TWO 10D COMMON NAILS (0.148"x3"), CLINCHED
3. ONE 3/8" OR 1/2" DIAMETER MACHINE BOLT WITH WASHERS, TURNED TIGHT
4. SEE 10/FP-6.2 FOR THROUGH BOLT, SIDE BEAM CLIP AND RING HANGER

9 / FP-6.1 STRUCTURE ATTACHMENT

NO SCALE

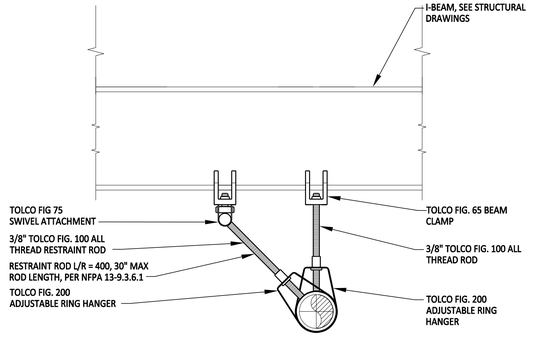

4 / FP-6.1 BRANCH LINE END RESTRAINT

NO SCALE

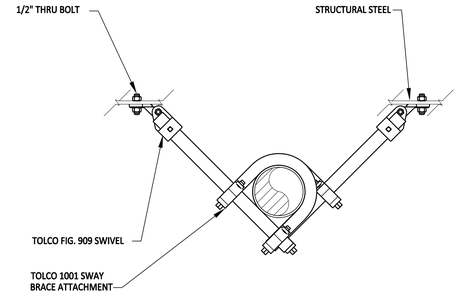

5 / FP-6.1 RISER BRACE

NO SCALE

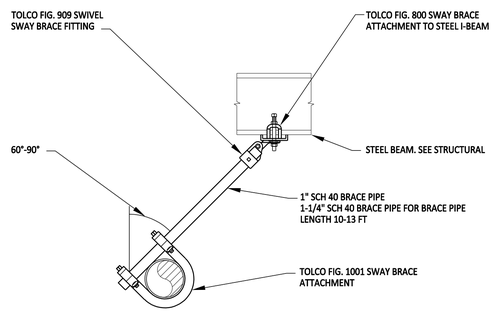

LATERAL BRACE

6 / FP-6.1 SEISMIC BRACE SB-1, SB-3, SB-7, SB-11

NO SCALE

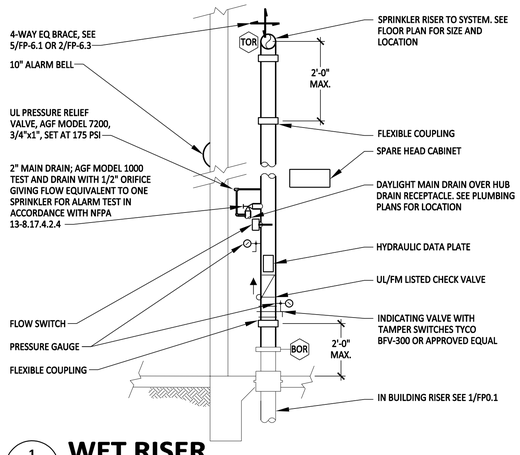

1 / FP-6.1 WET RISER

NO SCALE

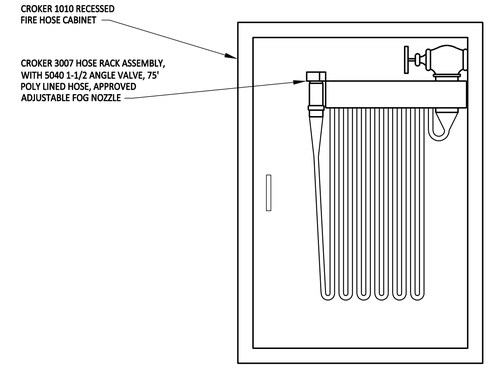

2 / FP-6.1 FIRE HOSE CABINET

NO SCALE

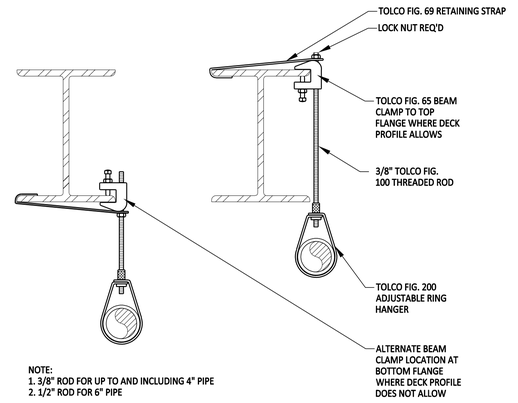

NOTE:
1. 3/8" ROD FOR UP TO AND INCLUDING 4" PIPE
2. 1/2" ROD FOR 6" PIPE

3 / FP-6.1 RING HANGER

NO SCALE

QUATTROCCHI KWOK ARCHITECTS
Main Office:
636 Fifth Street, Santa Rosa, CA 95404
Pleasanton Office:
600 Main Street, Suite E,
Pleasanton, CA 94566
(707) 576-0829

AXIOM ENGINEERS
CONSULTING ENGINEERS
www.axiomengineers.com
22 Lower Ragsdale Dr., Suite A
Monterey, California 93940-5788
ph. (831) 649-8000
fx. (831) 649-8008
AE Project # : 20190066

REGISTERED PROFESSIONAL ENGINEER
STEVEN E. RAISON
No. M30657
EXP. JUNE 30, 2020
MECHANICAL
STATE OF CALIFORNIA

FREEDOM HIGH SCHOOL

PERFORMING ARTS AND CTE FACILITIES

1050 NEROLY RD
OAKLEY, CA 94561

LIBERTY UNION HIGH SCHOOL DISTRICT

ARCH PROJECT NO: 1739.00
DRAWN BY:
DRAWING SCALE: NONE
PTN: 61721-0068

BID SET

AUGUST 13, 2019

SHEET TITLE

DETAILS - FIRE PROTECTION

SHEET NUMBER

FP-6.1

THE USE OF THESE PLANS AND SPECIFICATIONS SHALL BE RESTRICTED TO THE ORIGINAL SITE FOR WHICH THEY WERE PREPARED AND PUBLICATION THEREOF IS EXPRESSLY LIMITED TO SUCH USE. RE-USE, REPRODUCTION, OR PUBLICATION BY ANY METHOD, IN WHOLE OR IN PART, IS PROHIBITED. TITLE TO THE PLANS AND SPECIFICATIONS REMAINS WITH THE ARCHITECT AND/OR ENGINEER OF RECORD. VISUAL CONTACT WITH THESE PLANS AND SPECIFICATIONS SHALL CONSTITUTE PRIMA FACIE EVIDENCE OF THE ACCEPTANCE OF THESE RESTRICTIONS. AXIOM ENGINEERS INC. - LEE & ASSOCIATES CONSULTING ENGINEERS

Drawing: H:\PROJ\2019\2019090\06\plotting\Details\FP-6.2.dwg
Xref's: No Xref's found
OCTOBER 29, 2019 9:34:43 a.m.

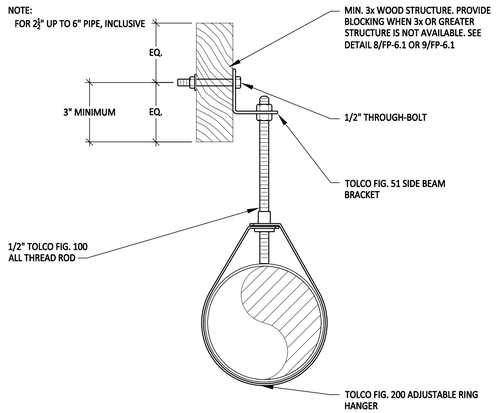

10 FP-6.2 RING HANGER

NO SCALE

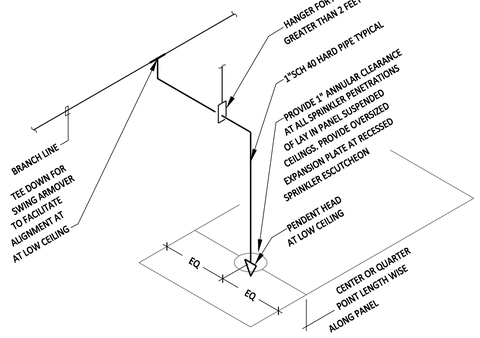

7 FP-6.2 TYPICAL DROP TO CEILING

NO SCALE

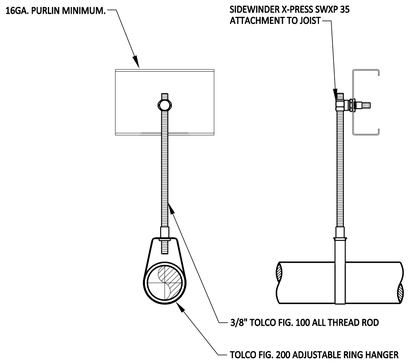

NOTE: FOR PIPING UP TO 3"

4 FP-6.2 RING HANGER

NO SCALE

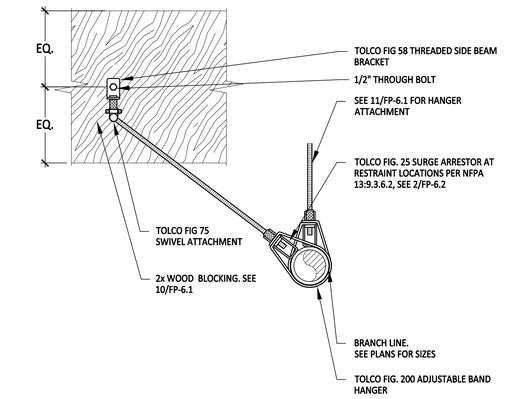

1 FP-6.2 BRANCH LINE RESTRAINT

NO SCALE

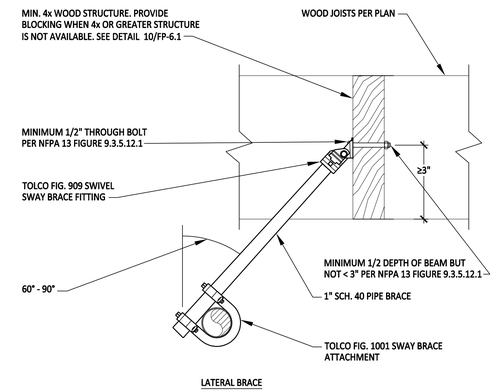

LATERAL BRACE

11 FP-6.2 SEISMIC BRACE SB-5

NO SCALE

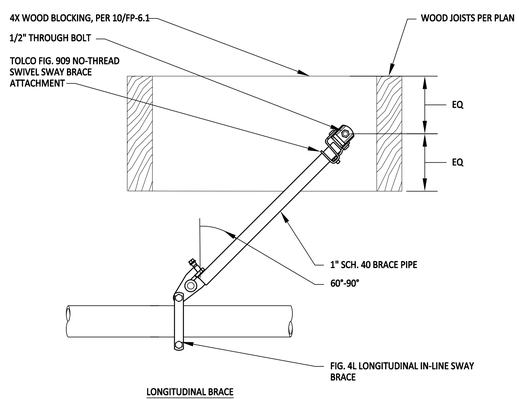

LONGITUDINAL BRACE

12 FP-6.2 SEISMIC BRACE SB-4

NO SCALE

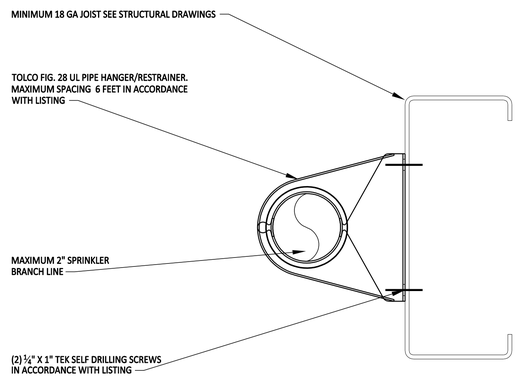

8 FP-6.2 OFFSET HANGER

NO SCALE

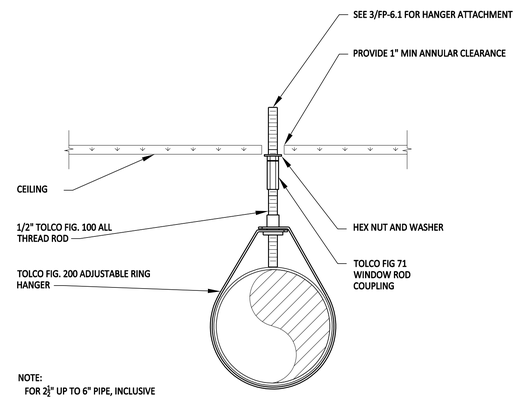

NOTE:
FOR 2½" UP TO 6" PIPE, INCLUSIVE

9 FP-6.2 RING HANGER

NO SCALE

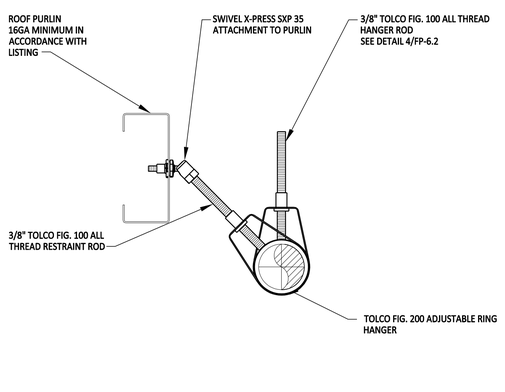

5 FP-6.2 BRANCH LINE END RESTRAINT

NO SCALE

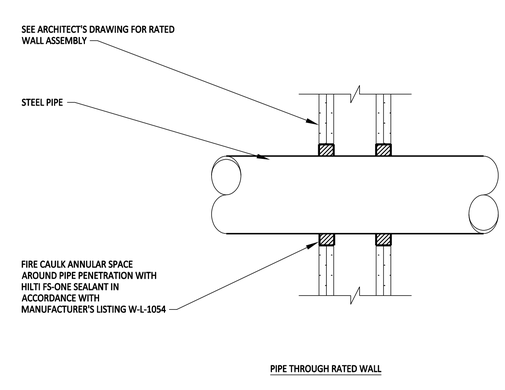

PIPE THROUGH RATED WALL

6 FP-6.2 FIRE CAULKING

NO SCALE

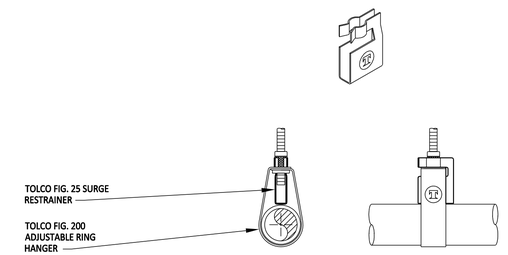

NOTES:

1. USE TYPE 1 - FOR 1" AND 1-1/4" PIPE AND HANGERS
2. USE TYPE 2 - FOR 1-1/2" AND 2" PIPE AND HANGERS
3. NOT REQUIRED IF ALL THREAD ROD IS INSTALLED TIGHT TO TOP OF PIPE

2 FP-6.2 SURGE RESTRAINT

NO SCALE

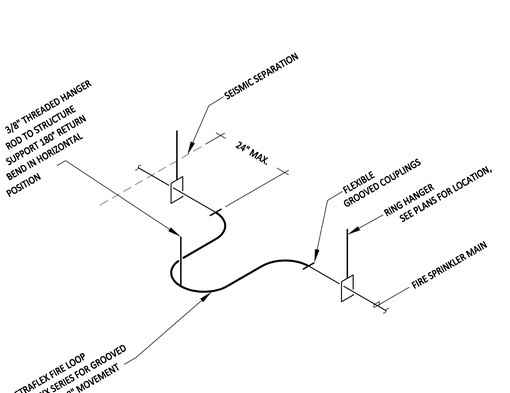

3 FP-6.2 SEISMIC JOINT

NO SCALE

QUATTROCCHI KWOK ARCHITECTS
Main Office:
636 Fifth Street, Santa Rosa, CA 95404
Pleasanton Office:
600 Main Street, Suite E.
Pleasanton, CA 94566
(707) 576-0829

AXIOM ENGINEERS CONSULTING ENGINEERS
www.axiomengineers.com
22 Lower Ragsdale Dr., Suite A
Monterey, California 93940-5788
ph. (831) 649-8000
fx. (831) 649-8038
AE Project # :20190066

REGISTERED PROFESSIONAL ENGINEER
STEVEN E. RAWSON
No. M30657
EXP. JUNE 30, 2020
MECHANICAL
STATE OF CALIFORNIA

FREEDOM HIGH SCHOOL

PERFORMING ARTS AND CTE FACILITIES

1050 NEROLY RD
OAKLEY, CA 94561

LIBERTY UNION HIGH SCHOOL DISTRICT

ARCH PROJECT NO:	1739.00
DRAWN BY:	
DRAWING SCALE:	NONE
PTN:	61721-0068

BID SET

AUGUST 13, 2019

SHEET TITLE

DETAILS - FIRE PROTECTION

SHEET NUMBER

FP-6.2

THE USE OF THESE PLANS AND SPECIFICATIONS SHALL BE RESTRICTED TO THE ORIGINAL SITE FOR WHICH THEY WERE PREPARED AND PUBLICATION THEREOF IS EXPRESSLY LIMITED TO SUCH USE. RE-USE, REPRODUCTION, OR PUBLICATION BY ANY METHOD, IN WHOLE OR IN PART, IS PROHIBITED. TITLE TO THE PLANS AND SPECIFICATIONS REMAINS WITH THE ENGINEER WITH THE ENGINEER WITHOUT PRECEDENCE. VISUAL CONTACT WITH THESE PLANS AND SPECIFICATIONS SHALL CONSTITUTE PRIMA FACIE EVIDENCE OF THE ACCEPTANCE OF THESE RESTRICTIONS. AXIOM ENGINEERS INC - LEE & ASSOCIATES CONSULTING ENGINEERS

OCTOBER 29, 2019 9:34:44 a.m.
Drawing: H:\PROJ\2019\20190500.00\Architect\Working\FP-6.3.dwg
Xref's: No Xref's found

CLIPS AT BLOCKING (BOTH SIDES) TO BE MIN 2"x4"x16 GAx6" LONG WITH (3) #10 SHEET METAL SCREWS AT EACH LEG OF CLIP. PROVIDE BLOCKING AT EACH LEG WITHIN 4" OF BRACING TYP. SHEAR TRANSFER SCREWS TO BE INSTALLED FROM TOP FLANGE OF BLOCK LIP INTO PLYWOOD SHEATING

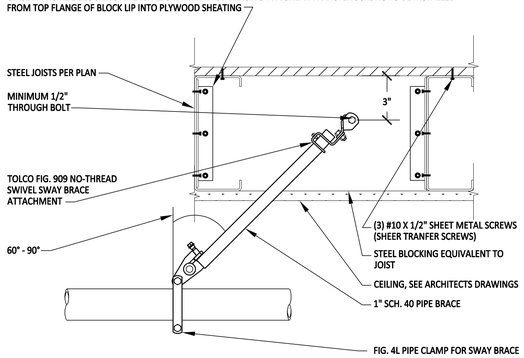

LONGITUDINAL BRACE

4 SEISMIC BRACE SB-6

FP-6.3

NO SCALE

HYDRAULIC - SYSTEM			
THIS BUILDING IS PROTECTED BY A HYDRAULIC DESIGN AUTOMATIC SPRINKLER SYSTEM			
LOCATION: X			
SPRINKLER INFORMATION			
NUMBER OF FLOWING SPRINKLERS: XXXXXXX			
MANUFACTURER: XXXXX		MODEL: XX	TEMPERATURE: XXXXX
TYPE: QUICK RESPONSE		K-FACTOR: XXX	
ORIFICE: XX			
BASIS OF DESIGN			
STANDARD: NFPA 13, 2016 EDITION		HAZARD GROUP: XXX	
DENSITY: XXX		DESIGN AREA OF DISCHARGE: XXX SQ. FT.	
SYSTEM DEMAND			
FLOW AT THE BASE OF THE RISER		HOSE STREAM ALLOWANCE:	
THE BASE OF THE RISER: XXX GPM		INSIDE: XXX GPM	
RESIDUAL PRESSURE AT		OUTSIDE: XXX GPM	
THE BASE OF THE RISER: XXX PSI		TOTAL XXX GPM	
FLOW AT THE		REMOTE SPRINKLER FLOW	
WATER SOURCE: XXX GPM		GPM: XXX GPM. @: XXX PSI	
RESIDUAL PRESSURE AT			
WATER SOURCE XXX PSI			

NOTE: SEE FP-A2.1, FP-A2.3, AND FP-B2.1 FOR DATA PLATE INFORMATION

1 HYDRAULIC DATA PLATE

FP-6.3

NO SCALE

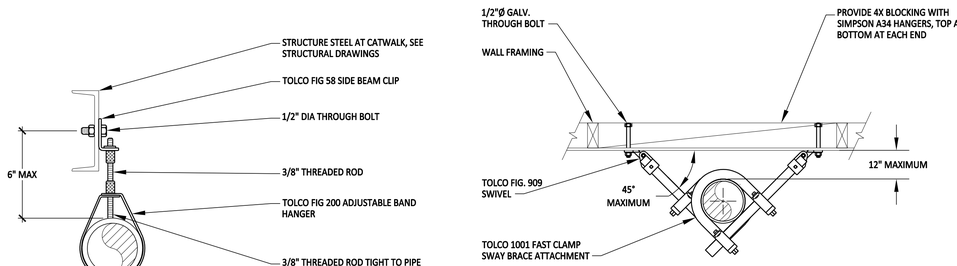

5 RING HANGER

FP-6.3

NO SCALE

2 RISER BRACE

FP-6.3

NO SCALE

CLIPS AT BLOCKING (BOTH SIDES) TO BE MIN 2"x4"x16 GAx6" LONG WITH (3) #10 SHEET METAL SCREWS AT EACH LEG OF CLIP. PROVIDE BLOCKING AT EACH LEG WITHIN 4" OF BRACING TYP. SHEAR TRANSFER SCREWS TO BE INSTALLED FROM TOP FLANGE OF BLOCK LIP INTO PLYWOOD SHEATING

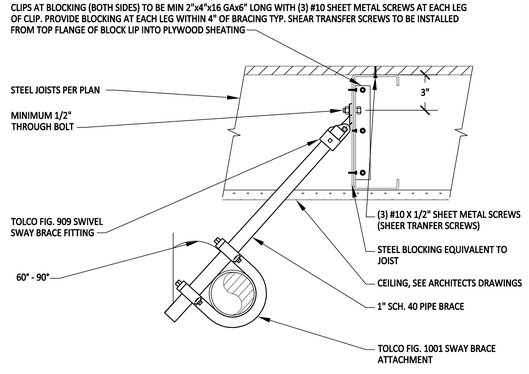

LATERAL BRACE

3 SEISMIC BRACE SB-9

FP-6.3

NO SCALE

QUATTROCCHI KWOK ARCHITECTS
Main Office:
636 Fifth Street, Santa Rosa, CA 95404
Pleasanton Office:
600 Main Street, Suite E.
Pleasanton, CA 94566
(707) 576-0829

AXIOM ENGINEERS℠ CONSULTING ENGINEERS
www.axiomengineers.com
22 Lower Ragsdale Dr., Suite A
Monterey, California 93940-5788
ph. (831) 649-8000
fx. (831) 649-8038
AE Project # :20190066

REGISTERED PROFESSIONAL ENGINEER
STEVEN E. RAISON
No. M30657
EXP. JUNE 30, 2020
MECHANICAL
STATE OF CALIFORNIA

FREEDOM HIGH SCHOOL

PERFORMING ARTS AND CTE FACILITIES

1050 NEROLY RD
OAKLEY, CA 94561

LIBERTY UNION HIGH SCHOOL DISTRICT

ARCH PROJECT NO:	1739.00
DRAWN BY:	
DRAWING SCALE:	NONE
PTN:	61721-0068

BID SET

AUGUST 13, 2019

SHEET TITLE

DETAILS - FIRE PROTECTION

SHEET NUMBER

FP-6.3

THE USE OF THESE PLANS AND SPECIFICATIONS SHALL BE RESTRICTED TO THE ORIGINAL SITE FOR WHICH THEY WERE PREPARED AND PUBLICATION THEREOF IS EXPRESSLY LIMITED TO SUCH USE. RE-USE, REPRODUCTION, OR PUBLICATION BY ANY METHOD, IN WHOLE OR IN PART, IS PROHIBITED. TITLE TO THE PLANS AND SPECIFICATIONS REMAINS WITH THE ENGINEER WITHOUT PREJUDICE. VISUAL CONTACT WITH THESE PLANS AND SPECIFICATIONS SHALL CONSTITUTE PRIMA FACIE EVIDENCE OF THE ACCEPTANCE OF THESE RESTRICTIONS. AXIOM ENGINEERS INC - LEE & ASSOCIATES CONSULTING ENGINEERS

Drawing: H:\PROJ\2019\20190500.jpg Xref's: No Xref's found
10/7/2019 9:29:19 AM 3:34:44 p.m.

Seismic Bracing Calculations

Sheet 9 of X

Project: FREEDOM HIGH SCHOOL NEW PERFORMING ARTS CENTER AND CTE BUILDING
Address: 1050 NEROLY ROAD, OAKLEY, CA 94561

Axiom Engineers
22 Lower Ragsdale Drive, Suite A
Monterey, CA 93940
(831) 649 - 8000
(831) 649 - 8038 Fax

Brace Information

Maximum Spacing: 20'-0"
Maximum Brace Length: 7'-0"
Bracing Material: 1" Sch. 40
Angle from Vertical: 60° MINIMUM
Least radius of gyration:* 0.421"
L/R value:* 200
Maximum Horizontal load: 1604 lbs
NFPA 13: Table 9.3.5.11.8(b)

Fastener Information

Orientation of connecting surface: NFPA Type C
Type: THROUGH BOLT
Diameter: 1/2 in
Length: 1/2 in
Maximum load: 2550 lbs
NFPA 13: Figure 9.3.5.12.1

Seismic Brace Attachments

Structure attachment or tension-only bracing system:
Make: TOLCO Model: FIG 909 NO THREAD SWIVEL
Listed load rating: 2015 Adjusted load rating: 1745
Sway brace (pipe attachment) fitting:
Make: TOLCO Model: FIG 1001 SWAY CLAMP
Listed load rating: 2015 Adjusted load rating: 1745

Seismic Brace Assembly Detail
(Provide detail on plans)

SEE DETAIL 6/FP-6.1
SEE DETERMINATION OF SEISMIC COEFFICIENT Cp ON FP-0.1

NOTE: LOAD LIMITED BY FIG 800 SWAY BRACE ATTACHMENT. LOAD ALONG BEAM 1265 LBS

SEE FP-A2.1 FOR ZONE OF INFLUENCE

Brace identification no. (to be used on plans) SB-11
[X] Lateral brace [ ] Longitudinal brace

Seismic Coefficient Cp=0.7 (See Attached NFPA13: Table 9.3.5.9.3)

Diameter	Type	Length	Total (ft)	Weight per ft		Total Weight	
2.5 in	Sch. 10 Steel	.	20	5.89	lb/ft	117.80	lb
1.25 in	Sch. 10 Steel	.	28.34	2.93	lb/ft	83.04	lb
1 in.	Sch. 40 Steel	.	40	2.05	lb/ft	82	lb
.	.	.	.	.	lb/ft	.	lb
.	.	.	.	.	lb/ft	.	lb
.	.	.	.	.	lb/ft	.	lb
Total Weight of Water Filled Piping						282.84	lb
Wp (Total Weight of Water Filled Piping x 1.15 to account for valves and fittings)						325.26	lb
Horizontal Force (NFPA13 9.3.5.9.3) Fpw = Cp x Wp =						227.68	lb

*Excludes tension-only bracing systems

Seismic Bracing Calculations

Sheet 7 of X

Project: FREEDOM HIGH SCHOOL NEW PERFORMING ARTS CENTER AND CTE BUILDING
Address: 1050 NEROLY ROAD, OAKLEY, CA 94561

Axiom Engineers
22 Lower Ragsdale Drive, Suite A
Monterey, CA 93940
(831) 649 - 8000
(831) 649 - 8038 Fax

Brace Information

Maximum Spacing: 35'-0"
Maximum Brace Length: 7'-0"
Bracing Material: 1" Sch. 40
Angle from Vertical: 60° MINIMUM
Least radius of gyration:* 0.421"
L/R value:* 200
Maximum Horizontal load: 1604 lbs
NFPA 13: Table 9.3.5.11.8(b)

Fastener Information

Orientation of connecting surface: NFPA Type C
Type: THROUGH BOLT
Diameter: 1/2 in
Length: 1/2 in
Maximum load: 2550 lbs
NFPA 13: Figure 9.3.5.12.1

Seismic Brace Attachments

Structure attachment or tension-only bracing system:
Make: TOLCO Model: FIG 909 NO THREAD SWIVEL
Listed load rating: 2015 Adjusted load rating: 1745
Sway brace (pipe attachment) fitting:
Make: TOLCO Model: FIG 1001 SWAY CLAMP
Listed load rating: 2015 Adjusted load rating: 1745

Seismic Brace Assembly Detail
(Provide detail on plans)

SEE DETAIL 6/FP-6.1
SEE DETERMINATION OF SEISMIC COEFFICIENT Cp ON FP-0.1

NOTE: LOAD LIMITED BY FIG 800 SWAY BRACE ATTACHMENT. LOAD ALONG BEAM 1265 LBS

SEE FP-A2.2 FOR ZONE OF INFLUENCE

Brace identification no. (to be used on plans) SB-7
[X] Lateral brace [ ] Longitudinal brace

Seismic Coefficient Cp=0.7 (See Attached NFPA13: Table 9.3.5.9.3)

Diameter	Type	Length	Total (ft)	Weight per ft		Total Weight	
2.5 in	Sch. 10 Steel	.	35	5.89	lb/ft	206.15	lb
1 in	Sch. 10 Steel	.	24	2.05	lb/ft	49.20	lb
.	.	.	.	.	lb/ft	.	lb
.	.	.	.	.	lb/ft	.	lb
.	.	.	.	.	lb/ft	.	lb
.	.	.	.	.	lb/ft	.	lb
Total Weight of Water Filled Piping						255.35	lb
Wp (Total Weight of Water Filled Piping x 1.15 to account for valves and fittings)						293.65	lb
Horizontal Force (NFPA13 9.3.5.9.3) Fpw = Cp x Wp =						205.56	lb

*Excludes tension-only bracing systems

Seismic Bracing Calculations

Sheet 5 of X

Project: FREEDOM HIGH SCHOOL NEW PERFORMING ARTS CENTER AND CTE BUILDING
Address: 1050 NEROLY ROAD, OAKLEY, CA 94561

Axiom Engineers
22 Lower Ragsdale Drive, Suite A
Monterey, CA 93940
(831) 649 - 8000
(831) 649 - 8038 Fax

Brace Information

Maximum Spacing: 20'-0"
Maximum Brace Length: 7'-0"
Bracing Material: 1" Sch. 40
Angle from Vertical: 60° MINIMUM
Least radius of gyration:* 0.421"
L/R value:* 200
Maximum Horizontal load: 1604 lbs
NFPA 13: Table 9.3.5.11.8(b)

Fastener Information

Orientation of connecting surface: NFPA Type F
Type: THROUGH BOLT
Diameter: 1/2 in
Length: 3 1/2 in
Maximum load: 600 lbs
NFPA 13: Figure 9.3.5.12.1

Seismic Brace Attachments

Structure attachment or tension-only bracing system:
Make: TOLCO Model: FIG 909 NO THREAD SWIVEL
Listed load rating: 2015 Adjusted load rating: 1745
Sway brace (pipe attachment) fitting:
Make: TOLCO Model: FIG 1001 SWAY CLAMP
Listed load rating: 2015 Adjusted load rating: 1745

Seismic Brace Assembly Detail
(Provide detail on plans)

SEE DETAIL 11/FP-6.2
SEE DETERMINATION OF SEISMIC COEFFICIENT Cp ON FP-0.1

SEE FP-B2.1 FOR ZONE OF INFLUENCE

Brace identification no. (to be used on plans) SB-5
[X] Lateral brace [ ] Longitudinal brace

Seismic Coefficient Cp=0.7 (See Attached NFPA13: Table 9.3.5.9.3)

Diameter	Type	Length	Total (ft)	Weight per ft		Total Weight	
3 in	Sch. 10 Steel	.	20	7.98	lb/ft	159.60	lb
1.5	Sch. 40 Steel	.	2	3.61	lb/ft	7.22	lb
1.25	Sch. 40 Steel	.	21	2.93	lb/ft	61.53	lb
1	Sch. 40 Steel	.	72	2.05	lb/ft	147.60	lb
.	.	.	.	.	lb/ft	.	lb
.	.	.	.	.	lb/ft	.	lb
Total Weight of Water Filled Piping						375.95	lb
Wp (Total Weight of Water Filled Piping x 1.15 to account for valves and fittings)						432.34	lb
Horizontal Force (NFPA13 9.3.5.9.3) Fpw = Cp x Wp =						302.64	lb

*Excludes tension-only bracing systems

Seismic Bracing Calculations

Sheet 3 of X

Project: FREEDOM HIGH SCHOOL NEW PERFORMING ARTS CENTER AND CTE BUILDING
Address: 1050 NEROLY ROAD, OAKLEY, CA 94561

Axiom Engineers
22 Lower Ragsdale Drive, Suite A
Monterey, CA 93940
(831) 649 - 8000
(831) 649 - 8038 Fax

Brace Information

Maximum Spacing: 20'-0"
Maximum Brace Length: 7'-0"
Bracing Material: 1" Sch. 40
Angle from Vertical: 60° MINIMUM
Least radius of gyration:* 0.421"
L/R value:* 200
Maximum Horizontal load: 1604 lbs
NFPA 13: Table 9.3.5.11.8(b)

Fastener Information

Orientation of connecting surface: NFPA Type C
Type: THROUGH BOLT
Diameter: 1/2 in
Length: 1/2 in
Maximum load: 2550 lbs
NFPA 13: Figure 9.3.5.12.1

Seismic Brace Attachments

Structure attachment or tension-only bracing system:
Make: TOLCO Model: FIG 909 NO THREAD SWIVEL
Listed load rating: 2015 Adjusted load rating: 1745
Sway brace (pipe attachment) fitting:
Make: TOLCO Model: FIG 1001 SWAY CLAMP
Listed load rating: 2015 Adjusted load rating: 1745

Seismic Brace Assembly Detail
(Provide detail on plans)

SEE DETAIL 6/FP-6.1
SEE DETERMINATION OF SEISMIC COEFFICIENT Cp ON FP-0.1

NOTE: LOAD LIMITED BY FIG 800 SWAY BRACE ATTACHMENT. LOAD ALONG BEAM 1265 LBS

SEE FP-A2.3 FOR ZONE OF INFLUENCE

Brace identification no. (to be used on plans) SB-3
[X] Lateral brace [ ] Longitudinal brace

Seismic Coefficient Cp=0.7 (See Attached NFPA13: Table 9.3.5.9.3)

Diameter	Type	Length	Total (ft)	Weight per ft		Total Weight	
6 in	Sch. 10 Steel	.	20	23.03	lb/ft	460.60	lb
.	.	.	.	.	lb/ft	.	lb
.	.	.	.	.	lb/ft	.	lb
.	.	.	.	.	lb/ft	.	lb
.	.	.	.	.	lb/ft	.	lb
.	.	.	.	.	lb/ft	.	lb
Total Weight of Water Filled Piping						460.60	lb
Wp (Total Weight of Water Filled Piping x 1.15 to account for valves and fittings)						529.69	lb
Horizontal Force (NFPA13 9.3.5.9.3) Fpw = Cp x Wp =						370.78	lb

*Excludes tension-only bracing systems

Seismic Bracing Calculations

Sheet 1 of X

Project: FREEDOM HIGH SCHOOL NEW PERFORMING ARTS CENTER AND CTE BUILDING
Address: 1050 NEROLY ROAD, OAKLEY, CA 94561

Axiom Engineers
22 Lower Ragsdale Drive, Suite A
Monterey, CA 93940
(831) 649 - 8000
(831) 649 - 8038 Fax

Brace Information

Maximum Spacing: 20'-0"
Maximum Brace Length: 7'-0"
Bracing Material: 1" Sch. 40
Angle from Vertical: 60° MINIMUM
Least radius of gyration:* 0.421"
L/R value:* 200
Maximum Horizontal load: 1604 lbs
NFPA 13: Table 9.3.5.11.8(b)

Fastener Information

Orientation of connecting surface: NFPA Type C
Type: THROUGH BOLT
Diameter: 1/2 in
Length: 1/2 in
Maximum load: 2550 lbs
NFPA 13: Figure 9.3.5.12.1

Seismic Brace Attachments

Structure attachment or tension-only bracing system:
Make: TOLCO Model: FIG 909 NO THREAD SWIVEL
Listed load rating: 2015 Adjusted load rating: 1745
Sway brace (pipe attachment) fitting:
Make: TOLCO Model: FIG 1001 SWAY CLAMP
Listed load rating: 2015 Adjusted load rating: 1745

Seismic Brace Assembly Detail
(Provide detail on plans)

SEE DETAIL 6/FP-6.1
SEE DETERMINATION OF SEISMIC COEFFICIENT Cp ON FP-0.1

NOTE: LOAD LIMITED BY FIG 800 SWAY BRACE ATTACHMENT. LOAD ALONG BEAM 1265 LBS

SEE FP-A2.3 FOR ZONE OF INFLUENCE

Brace identification no. (to be used on plans) SB-1
[X] Lateral brace [ ] Longitudinal brace

Seismic Coefficient Cp=0.7 (See Attached NFPA13: Table 9.3.5.9.3)

Diameter	Type	Length	Total (ft)	Weight per ft		Total Weight	
4 in	Sch. 10 Steel	.	20	11.78	lb/ft	235.60	lb
2	Sch. 10 Steel	.	156	4.22	lb/ft	658.32	lb
.	.	.	.	.	lb/ft	.	lb
.	.	.	.	.	lb/ft	.	lb
.	.	.	.	.	lb/ft	.	lb
.	.	.	.	.	lb/ft	.	lb
Total Weight of Water Filled Piping						893.92	lb
Wp (Total Weight of Water Filled Piping x 1.15 to account for valves and fittings)						1028.01	lb
Horizontal Force (NFPA13 9.3.5.9.3) Fpw = Cp x Wp =						719.61	lb

*Excludes tension-only bracing systems

Seismic Bracing Calculations

Sheet 8 of X

Project: FREEDOM HIGH SCHOOL PERFORMING ARTS CENTER AND CTE BUILDING
Address: 1050 NEROLY ROAD, OAKLEY, CA 94561

Axiom Engineers
22 Lower Ragsdale Drive, Suite A
Monterey, CA 93940
(831) 649 - 8000
(831) 649 - 8038 Fax

Brace Information

Maximum Spacing: 23'-0"
Maximum Brace Length: 7'-0"
Bracing Material: 1" Sch. 40
Angle from Vertical: 60° MINIMUM
Least radius of gyration:* 0.421"
L/R value:* 200
Maximum Horizontal load: 1604 lbs
NFPA 13: Table 9.3.5.11.8(b)

Fastener Information

Orientation of connecting surface: NFPA Type F
Type: THROUGH BOLT
Diameter: 1/2 in
Length: 3 1/2 in
Maximum load: 2850 lbs
NFPA 13: Figure 9.3.5.12.1

Seismic Brace Attachments

Structure attachment or tension-only bracing system:
Make: TOLCO Model: FIG 909 NO THREAD SWIVEL
Listed load rating: 2015 Adjusted load rating: 1745
Sway brace (pipe attachment) fitting:
Make: TOLCO Model: FIG 1001 SWAY CLAMP
Listed load rating: 2015 Adjusted load rating: 1745

Seismic Brace Assembly Detail
(Provide detail on plans)

SEE DETAIL 3/FP-6.3
SEE DETERMINATION OF SEISMIC COEFFICIENT Cp ON FP-0.1

SEE FP-A2.2 FOR ZONE OF INFLUENCE

Brace identification no. (to be used on plans) SB-9
[X] Lateral brace [ ] Longitudinal brace

Seismic Coefficient Cp=0.7 (See Attached NFPA13: Table 9.3.5.9.3)

Diameter	Type	Length	Total (ft)	Weight per ft		Total Weight	
2.5 in	Sch. 10 Steel	.	23	5.89	lb/ft	135.47	lb
1	Sch. 40 Steel	.	16	2.05	lb/ft	32.80	lb
.	.	.	.	.	lb/ft	.	lb
.	.	.	.	.	lb/ft	.	lb
.	.	.	.	.	lb/ft	.	lb
.	.	.	.	.	lb/ft	.	lb
Total Weight of Water Filled Piping						168.27	lb
Wp (Total Weight of Water Filled Piping x 1.15 to account for valves and fittings)						193.51	lb
Horizontal Force (NFPA13 9.3.5.9.3) Fpw = Cp x Wp =						135.46	lb

*Excludes tension-only bracing systems

Seismic Bracing Calculations

Sheet 6 of X

Project: FREEDOM HIGH SCHOOL PERFORMING ARTS CENTER AND CTE BUILDING
Address: 1050 NEROLY ROAD, OAKLEY, CA 94561

Axiom Engineers
22 Lower Ragsdale Drive, Suite A
Monterey, CA 93940
(831) 649 - 8000
(831) 649 - 8038 Fax

Brace Information

Maximum Spacing: 20'-0"
Maximum Brace Length: 7'-0"
Bracing Material: 1" Sch. 40
Angle from Vertical: 60° MINIMUM
Least radius of gyration:* 0.421"
L/R value:* 200
Maximum Horizontal load: 1604 lbs
NFPA 13: Table 9.3.5.11.8(b)

Fastener Information

Orientation of connecting surface: NFPA Type I
Type: THROUGH BOLT
Diameter: 1/2 in
Length: 3 1/2 in
Maximum load: 2260 lbs
NFPA 13: Figure 9.3.5.12.1

Seismic Brace Attachments

Structure attachment or tension-only bracing system:
Make: TOLCO Model: FIG 909 NO THREAD SWIVEL
Listed load rating: 2015 Adjusted load rating: 1745
Sway brace (pipe attachment) fitting:
Make: TOLCO Model: FIG 4L IN-LINE SWAY BRACE
Listed load rating: 2015 Adjusted load rating: 1745

Seismic Brace Assembly Detail
(Provide detail on plans)

SEE DETAIL 4/FP-6.3
SEE DETERMINATION OF SEISMIC COEFFICIENT Cp ON FP-0.1

Brace identification no. (to be used on plans) SB-6
[ ] Lateral brace [X] Longitudinal brace

Seismic Coefficient Cp=0.7 (See Attached NFPA13: Table 9.3.5.9.3)

Diameter	Type	Length	Total (ft)	Weight per ft		Total Weight	
2.5 in	Sch. 10 Steel	.	20	5.89	lb/ft	117.80	lb
.	.	.	.	.	lb/ft	.	lb
.	.	.	.	.	lb/ft	.	lb
.	.	.	.	.	lb/ft	.	lb
.	.	.	.	.	lb/ft	.	lb
.	.	.	.	.	lb/ft	.	lb
Total Weight of Water Filled Piping						117.80	lb
Wp (Total Weight of Water Filled Piping x 1.15 to account for valves and fittings)						135.47	lb
Horizontal Force (NFPA13 9.3.5.9.3) Fpw = Cp x Wp =						94.83	lb

*Excludes tension-only bracing systems

Seismic Bracing Calculations

Sheet 4 of X

Project: FREEDOM HIGH SCHOOL PERFORMING ARTS CENTER AND CTE BUILDING
Address: 1050 NEROLY ROAD, OAKLEY, CA 94561

Axiom Engineers
22 Lower Ragsdale Drive, Suite A
Monterey, CA 93940
(831) 649 - 8000
(831) 649 - 8038 Fax

Brace Information

Maximum Spacing: 40'-0"
Maximum Brace Length: 7'-0"
Bracing Material: 1" Sch. 40
Angle from Vertical: 60° MINIMUM
Least radius of gyration:* 0.421"
L/R value:* 200
Maximum Horizontal load: 1604 lbs
NFPA 13: Table 9.3.5.11.8(b)

Fastener Information

Orientation of connecting surface: NFPA Type I
Type: THROUGH BOLT
Diameter: 1/2 in
Length: 3 1/2 in
Maximum load: 485 lbs
NFPA 13: Figure 9.3.5.12.1

Seismic Brace Attachments

Structure attachment or tension-only bracing system:
Make: TOLCO Model: FIG 909 NO THREAD SWIVEL
Listed load rating: 2015 Adjusted load rating: 1745
Sway brace (pipe attachment) fitting:
Make: TOLCO Model: FIG 4L IN-LINE SWAY BRACE
Listed load rating: 2015 Adjusted load rating: 1745

Seismic Brace Assembly Detail
(Provide detail on plans)

SEE DETAIL 12/FP-6.2
SEE DETERMINATION OF SEISMIC COEFFICIENT Cp ON FP-0.1

Brace identification no. (to be used on plans) SB-4
[ ] Lateral brace [X] Longitudinal brace

Seismic Coefficient Cp=0.7 (See Attached NFPA13: Table 9.3.5.9.3)

Diameter	Type	Length	Total (ft)	Weight per ft		Total Weight	
3 in	Sch. 10 Steel	.	40	7.98	lb/ft	319.20	lb
.	.	.	.	.	lb/ft	.	lb
.	.	.	.	.	lb/ft	.	lb
.	.	.	.	.	lb/ft	.	lb
.	.	.	.	.	lb/ft	.	lb
.	.	.	.	.	lb/ft	.	lb
Total Weight of Water Filled Piping						319.20	lb
Wp (Total Weight of Water Filled Piping x 1.15 to account for valves and fittings)						367.08	lb
Horizontal Force (NFPA13 9.3.5.9.3) Fpw = Cp x Wp =						256.96	lb

*Excludes tension-only bracing systems

Seismic Bracing Calculations

Sheet 2 of X

Project: FREEDOM HIGH SCHOOL NEW PERFORMING ARTS CENTER AND CTE BUILDING
Address: 1050 NEROLY ROAD, OAKLEY, CA 94561

Axiom Engineers
22 Lower Ragsdale Drive, Suite A
Monterey, CA 93940
(831) 649 - 8000
(831) 649 - 8038 Fax

Brace Information

Maximum Spacing: 40'-0"
Maximum Brace Length: 7'-0"
Bracing Material: 1" Sch. 40
Angle from Vertical: 60° MINIMUM
Least radius of gyration:* 0.421"
L/R value:* 200
Maximum Horizontal load: 1604 lbs
NFPA 13: Table 9.3.5.11.8(b)

Fastener Information

Orientation of connecting surface: NFPA Type C
Type: THROUGH BOLT
Diameter: 1/2 in
Length: 1/2 in
Maximum load: 2550 lbs
NFPA 13: Figure 9.3.5.12.1

Seismic Brace Attachments

Structure attachment or tension-only bracing system:
Make: TOLCO Model: FIG 909 NO THREAD SWIVEL
Listed load rating: 2015 Adjusted load rating: 1745
Sway brace (pipe attachment) fitting:
Make: TOLCO Model: FIG 4L IN-LINE SWAY BRACE
Listed load rating: 2015 Adjusted load rating: 1745

Seismic Brace Assembly Detail
(Provide detail on plans)

SEE DETAIL 7/FP-6.1
SEE DETERMINATION OF SEISMIC COEFFICIENT Cp ON FP-0.1

NOTE: LOAD LIMITED BY FIG 800 SWAY BRACE ATTACHMENT. LOAD ALONG BEAM 1265 LBS

Brace identification no. (to be used on plans) SB-2
[ ] Lateral brace [X] Longitudinal brace

Seismic Coefficient Cp=0.7 (See Attached NFPA13: Table 9.3.5.9.3)

Diameter	Type	Length	Total (ft)	Weight per ft		Total Weight	
6 in	Sch. 10 Steel	.	40	23.03	lb/ft	921.20	lb
.	.	.	.	.	lb/ft	.	lb
.	.	.	.	.	lb/ft	.	lb
.	.	.	.	.	lb/ft	.	lb
.	.	.	.	.	lb/ft	.	lb
.	.	.	.	.	lb/ft	.	lb
Total Weight of Water Filled Piping						921.20	lb
Wp (Total Weight of Water Filled Piping x 1.15 to account for valves and fittings)						1059.38	lb
Horizontal Force (NFPA13 9.3.5.9.3) Fpw = Cp x Wp =						741.57	lb

*Excludes tension-only bracing systems

QUATTROCCHI KWOK ARCHITECTS
Main Office:
636 Fifth Street, Santa Rosa, CA 95404
Pleasanton Office:
600 Main Street, Suite E.
Pleasanton, CA 94566
(707) 576-0829

www.axiomengineers.com
AXIOM ENGINEERS
CONSULTING ENGINEERS
22 Lower Ragsdale Dr., Suite A.
Monterey, California 93940-5788
ph. (831) 649-8000
fx. (831) 649-8038
AE Project # : 20190066

REGISTERED PROFESSIONAL ENGINEER
STEVEN E. RAISON
No. M30657
EXP. JUNE 30, 2020
MECHANICAL
STATE OF CALIFORNIA

FREEDOM HIGH SCHOOL

PERFORMING ARTS AND CTE FACILITIES

1050 NEROLY RD
OAKLEY, CA 94561

LIBERTY UNION HIGH SCHOOL DISTRICT

ARCH PROJECT NO: 1739.00
DRAWN BY:
DRAWING SCALE: NONE
PTN: 61721-0068

BID SET

AUGUST 13, 2019

SHEET TITLE

SEISMIC BRACING CALCULATIONS - FIRE PROTECTION

SHEET NUMBER

FP-6.4

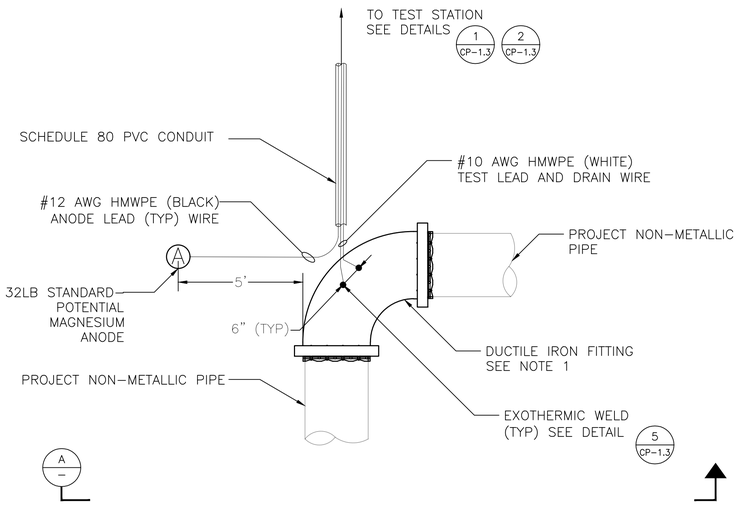

NOTE:

1. DUCTILE IRON FITTING MAY BE DIFFERENT GEOMETRY, SUCH AS TEE OR INLINE.
2. WRAP FITTING IN PETROLATUM WAX TAPE AND OVERLAP PIPE BY 2 TIMES THE PIPE DIAMETER.

ANODE TEST STATION (ATS) FOR METALLIC FITTING OR VALVE ON NON-METALLIC PIPE PLAN VIEW
NTS 1

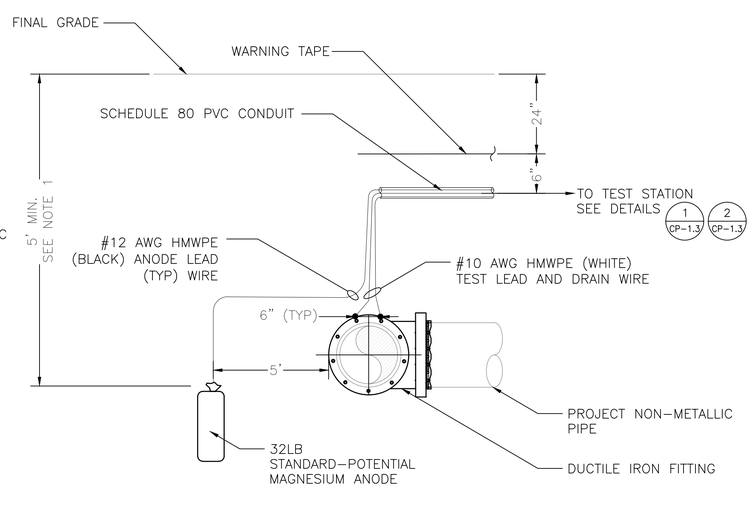

NOTE:

1. TOP OF ANODE SHALL BE AT OR BELOW PIPE INVERT.

ANODE TEST STATION (ATS) FOR METALLIC FITTING OR VALVE ON NON-METALLIC PIPE SECTION VIEW
NTS A

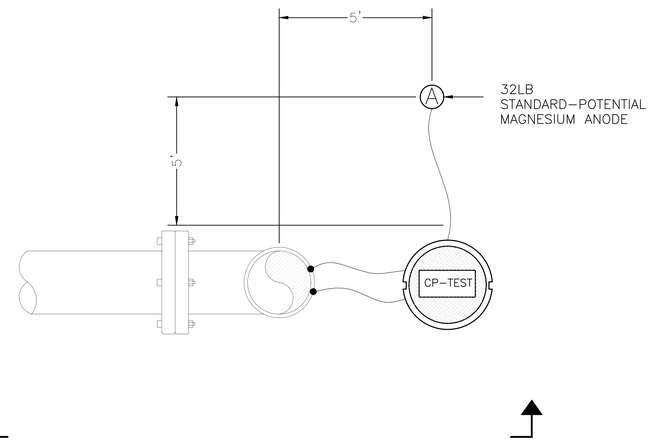

ANODE TEST STATION (ATS) FOR RISER PLAN VIEW
NTS 2

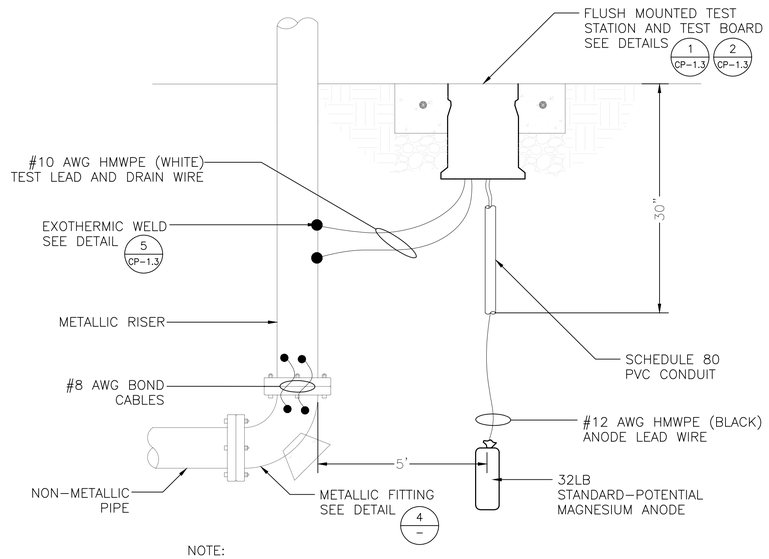

NOTE:

1. IF RISER IS DUCTILE IRON, BOND PIPE AND FITTINGS. RISER MAY HAVE 90 DEGREE ELBOW OR TEE. DUCTILE IRON PIPE AND FITTINGS SHALL HAVE POLYETHYLENE ENCASEMENT.
2. IF RISER IS STAINLESS STEEL, WRAP IN PETROLATUM WAX TAPE.

ANODE TEST STATION (ATS) FOR RISER SECTION VIEW
NTS B

DETAIL NOT USED

3

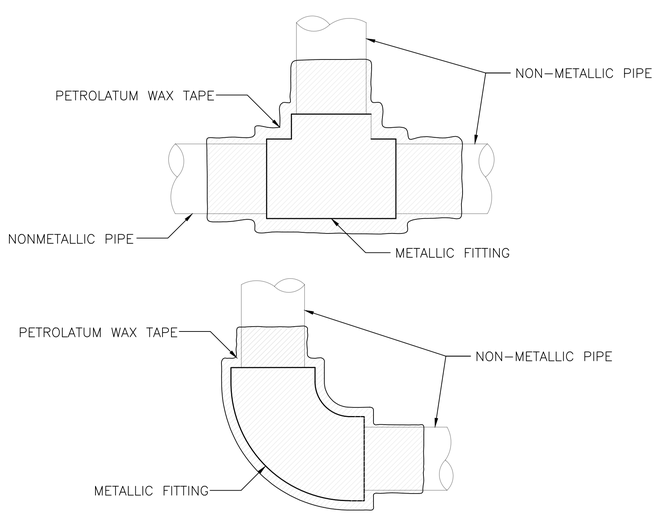

NOTES:

1. PETROLATUM WAX TAPE SHALL OVERLAP PIPE BY 2 TIMES THE PIPE DIAMETER.
2. ENCASE FITTING AND PETROLATUM WAX TAPE IN CONCRETE WITH 2-INCH COVER AT MINIMUM

CORROSION CONTROL FOR 2-INCH DIAMETER METALLIC FITTING
NTS 4

V&A
1000 Broadway, Suite 320
Oakland, CA 94607
Tel. (510) 903-6600, Fax (510) 903-6601

QUATTROCCHI KWOK ARCHITECTS
Main Office:
636 Fifth Street, Santa Rosa, CA 95404
Pleasanton Office:
600 Main Street, Suite E.
Pleasanton, CA 94566
(707) 576-0829

LICENSED ARCHITECT
JIM THEISS
LICENSE # C22643
EXP JUNE 30, 2019
STATE OF CALIFORNIA

Date: SIGNED: 8/6/19

FREEDOM HIGH SCHOOL

NEW PERFORMING ARTS CENTER AND CTE BUILDING

1050 Neroly Rd
Oakley, CA 94561

Liberty Union High School District

ARCH PROJECT NO: 1739.00
DRAWN BY:
DRAWING SCALE:
PTN: 61721-0068

BID SET

AUGUST 13, 2019

SHEET TITLE

CP DETAILS

SHEET NUMBER

CP-1.2

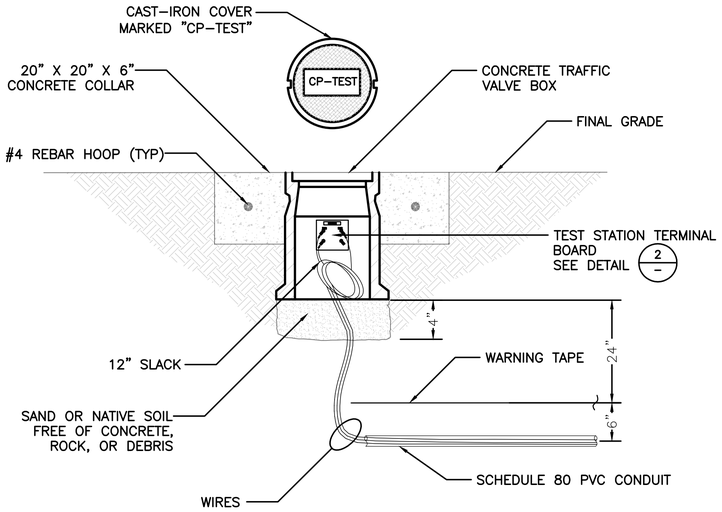

FLUSH MOUNTED TEST STATION DETAIL 1
NTS

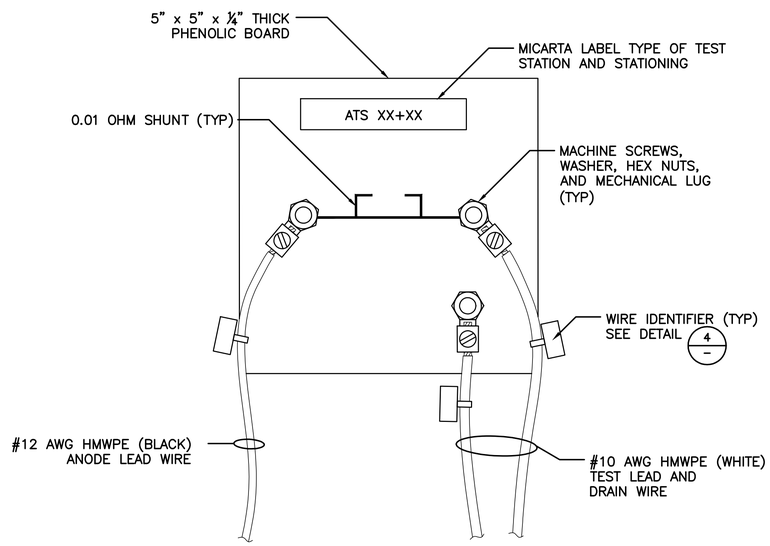

FLUSH–MOUNTED ANODE TEST STATION
(ATS) TERMINAL BOARD DETAIL 2
NTS

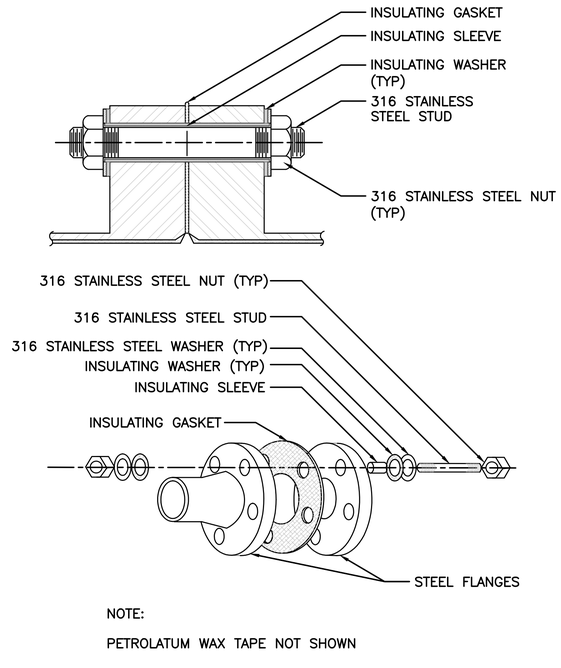

NOTE:

PETROLATUM WAX TAPE NOT SHOWN

DIELECTRIC INSULATING FLANGE KIT DETAIL
WITH SECTION VIEW 3
NTS

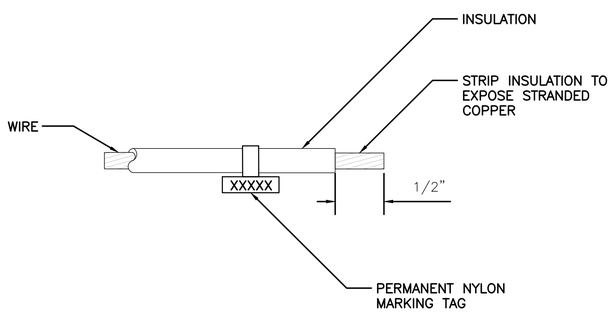

WIRE IDENTIFIER DETAIL 4
NTS

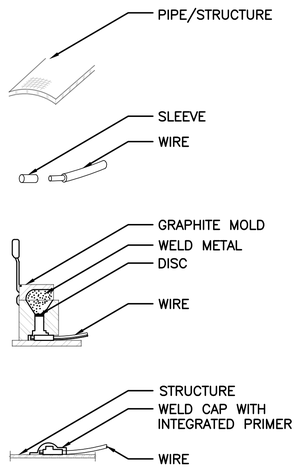

1. GRIND PIPE/STRUCTURE TO BARE METAL AND CLEAN SURFACE. GROUND AREA SHALL BE LARGE ENOUGH FOR EXOTHERMIC WELD AND SMALL ENOUGH TO BE COMPLETELY COVERED BY WELD CAP.
2. STRIP INSULATION FROM WIRE AND ATTACH SLEEVE.
3. HOLD MOLD FIRMLY WITH OPENING AWAY FROM OPERATOR. IGNITE WITH FLINT GUN. REMOVE SLAG FROM CONNECTION WITH CHIPPING HAMMER. TEST WELD WITH 22 OZ HAMMER.
4. COVER CONNECTION WITH WELD CAP WITH INTEGRATED PRIMER. REPAIR ALL DAMAGE TO COATING AND LINING IN ACCORDANCE WITH COATING AND LINING MFG RECOMMENDATIONS.

EXOTHERMIC WELD DETAIL FOR
DUCTILE IRON AND STEEL PIPE 5
NTS

V&A
1000 Broadway, Suite 320
Oakland, CA 94607
Tel. (510) 903-6600, Fax (510) 903-6601

QUATTROCCHI KWOK
ARCHITECTS
Main Office:
636 Fifth Street, Santa Rosa, CA 95404
Pleasanton Office:
600 Main Street, Suite E.
Pleasanton, CA 94566
(707) 576-0829

LICENSED ARCHITECT
JIM THEISS
LICENSE # C22643
EXP JUNE 30, 2019
STATE OF CALIFORNIA

Date: SIGNED: 8/6/19

FREEDOM HIGH SCHOOL

NEW PERFORMING ARTS CENTER AND CTE BUILDING

1050 Neroly Rd
Oakley, CA 94561

Liberty Union High School District

ARCH PROJECT NO: 1739.00
DRAWN BY:
DRAWING SCALE:
PTN: 61721-0068

BID SET

AUGUST 13, 2019

SHEET TITLE

CP DETAILS

SHEET NUMBER

CP-1.3

A. PROJECT GENERAL INFORMATION

1.	Project Location (city)	Oakley	**8.**	Standards Version	Compliance2016
2.	CA Zip Code	94561	**9.**	Compliance Software (version)	EnergyPro 7.2
3.	Climate Zone	12	**10.**	Weather File	CONCORD_724936_CZ2010.epw
4.	Total Conditioned Floor Area in Scope	21,903 ft²	**11.**	Building Orientation (deg)	(N) 0 deg
5.	Total Unconditioned Floor Area	1,086 ft²	**12.**	Permitted Scope of Work	NewEnvelopeAndLighting
6.	Total # of Stories (Habitable Above Grade)	1	13	Building Type(s)	Nonresidential
7.	Total # of dwelling units	0	14	Gas Type	NaturalGas

B. COMPLIANCE RESULTS FOR PERFORMANCE COMPONENTS (Annual TDV Energy Use, kBtu/ft ²-yr) § 140.1

BUILDING COMPLIES

1. Energy Component	2. Standard Design (TDV)	3. Proposed Design (TDV)	4. Compliance Margin (TDV)	5. Percent Better than Standard
Space Heating	25.64	23.89	1.75	6.8%
Space Cooling	108.64	109.00	-0.36	-0.3%
Indoor Fans	42.57	42.92	-0.35	-0.8%
Heat Rejection	--	--	--	--
Pumps & Misc.	4.40	4.19	0.21	4.8%
Domestic Hot Water	--	--	--	--
Indoor Lighting	62.43	57.54	4.89	7.8%
COMPLIANCE TOTAL	**243.68**	**237.54**	**6.14**	**2.5%**
Receptacle	53.74	53.74	0.0	0.0%
Process	--	--	--	--
Other Ltg	--	--	--	--
Process Motors	--	--	--	--
TOTAL	**297.42**	**291.28**	**6.1**	**2.1%**

C. PRIORITY PLAN CHECK/ INSPECTION ITEMS (in order of highest to lowest TDV energy savings)

1st	Indoor Lighting: Check lighting
2nd	Space Heating: Check envelope and mechanical
3rd	Pumps & Misc.: Check mechanical
4th	Heat Rejection: Check envelope and mechanical
5th	Domestic Hot Water: Check mechanical
6th	Indoor Fans: Check envelope and mechanical
7th	Space Cooling: Check envelope and mechanical

Compliance Margin By Energy Component (from Table B column 4)

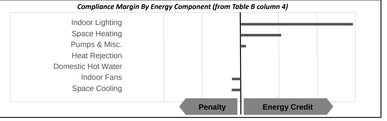

D. EXCEPTIONAL CONDITIONS

The building does not include service water heating. Verify that service water heating is not required and is not included in the design.

This project uses the Simplified Geometry Performance Modeling Approach which is not capable of modeling daylighting controls and assumes the prescriptive Secondary Daylit Control requirements are met. PRESCRIPTIVE COMPLIANCE documentation (form NRCC-LTI-02-E) for the requirements of section 140.6(d) Automatic Daylighting Controls in Secondary Daylit Zones is required.

The proposed building includes space(s) that are modeled with unknown HVAC system(s). Verify that the spaces modeled with unknown HVAC system(s) are either part of core and shell analysis which will be permitted for mechanical compliance in the future, or the spaces have an existing HVAC system not modeled for compliance, or the compliance scope does not include mechanical.

E. HERS VERIFICATION

This Section Does Not Apply

F. ADDITIONAL REMARKS

None Provided

G. COMPLIANCE PATH & CERTIFICATE OF COMPLIANCE SUMMARY

Identify which building components use the performance or prescriptive path for compliance. "NA"= not in project

For components that utilize the performance path, indicate the sheet number that includes mandatory notes on plans.

Building Component	Compliance Path		Compliance Forms *(required for submittal)*	Location of Mandatory Notes on Plans
Envelope	☒	Performance	NRCC-PRF-ENV-DETAILS (section of the NRCC-PRF-01-E)	
	☐	Prescriptive	NRCC-ENV-01 / 02 / 03 / 04 / 05 / 06-E	
	☐	NA		
Mechanical	☐	Performance	NRCC-PRF-MCH-DETAILS (section of the NRCC-PRF-01-E)	
	☐	Prescriptive	NRCC-MCH-01 / 02 / 03 / 04 / 05 / 06 / 07-E	
	☒	NA		
Domestic Hot Water	☐	Performance	NRCC-PRF-PLB-DETAILS (section of the NRCC-PRF-01-E)	
	☐	Prescriptive	NRCC-PLB-01-E	
	☒	NA		
Lighting (Indoor Conditioned)	☒	Performance	NRCC-PRF-LTI-DETAILS (section of the NRCC-PRF-01-E)	
	☐	Prescriptive	NRCC-LTI-01 / 02 / 03 / 04 / 05-E	
	☐	NA		
Covered Process: Commercial Kitchens	☐	Performance	S2 (section of the NRCC-PRF-01-E)	
	☐	Prescriptive	NRCC-PRC-01/ 03-E	
	☒	NA		
Covered Process: Computer Rooms	☐	Performance	S3 (section of the NRCC-PRF-01-E)	
	☐	Prescriptive	NRCC-PRC-01/ 04-E	
	☒	NA		
Covered Process: Laboratory Exhaust	☐	Performance	S4 (section of the NRCC-PRF-01-E)	
	☐	Prescriptive	NRCC-PRC-01/ 09-E	
	☒	NA		

G. COMPLIANCE PATH & CERTIFICATE OF COMPLIANCE SUMMARY

The following building components are only eligible for prescriptive compliance. Indicate which are relevant to the project.

Yes	NA	Prescriptive Requirement	Compliance Forms
☒	☐	Lighting (Indoor Unconditioned) §140.6	NRCC-LTI-01 / 02 / 03 / 04 / 05-E
☐	☒	Lighting (Outdoor) §140.7	NRCC-LTO-01 / 02 / 03-E
☐	☒	Lighting (Sign) §140.8	NRCC-LTS-01-E
☐	☒	Solar Thermal Water Heating: §140.5	NRCC-STH-01-E

The following building components may have mandatory requirements per Part 6. Indicate which are relevant to the project.

Yes	NA	Mandatory Requirement	Compliance Forms
☐	☒	Commissioning: §120.8	
☐	☒	Simple Systems	NRCC-CXR-01 / 02 / 03 / 05-E
☐	☒	Complex Systems	NRCC-CXR-01 / 02 / 04 / 05-E
☐	☒	Electrical: §130.5	NRCC-ELC-01-E
☐	☒	Solar Ready: §110.10	NRCC-SRA-01 / 02-E
☐	☒	Covered Process: §120.6	NRCC-PRC-01-E
☐	☒	Parking Garage	NRCC-PRC-02-E
☐	☒	Commercial Refrigeration	NRCC-PRC-05-E
☐	☒	Warehouse Refrigeration	NRCC-PRC-06/07/08-E
☐	☒	Compressed Air	NRCC-PRC-10-E
☐	☒	Process Boilers	NRCC-PRC-11-E

H. CERTIFICATE OF INSTALLATION, CERTIFICATE OF ACCEPTANCE & CERTIFICATE OF VERIFICATION SUMMARY (NRCI/NRCA/NRCV) –

Documentation Author to indicate which Certificates must be submitted for the features to be recognized for compliance
(Retain copies and verify forms are completed and signed to post in field for Field Inspector to verify).
See Tables G. and H. in MCH and LTI Details Sections for Acceptance Tests and forms by equipment.

Building Component	Compliance Forms *(required for submittal)*	Confirmed Pass	Confirmed Fail
Envelope	☒ NRCI-ENV-01-E - For all buildings	☐	☐
	☒ NRCA-ENV-02-F- NFRC label verification for fenestration	☐	☐
Mechanical	☐ NRCI-MCH-01-E - For all buildings with Mechanical Systems	☐	☐
	☐ NRCA-MCH-02-A- Outdoor Air	☐	☐
	☐ NRCA-MCH-03-A – Constant Volume Single Zone HVAC	☐	☐
	☐ NRCA-MCH-04-H- Air Distribution Duct Leakage	☐	☐
	☐ NRCA-MCH-05-A- Air Economizer Controls	☐	☐
	☐ NRCA-MCH-06-A- Demand Control Ventilation	☐	☐
	☐ NRCA-MCH-07-A – Supply Fan Variable Flow Controls	☐	☐
	☐ NRCA-MCH-08-A- Valve Leakage Test	☐	☐
	☐ NRCA-MCH-09-A – Supply Water Temp Reset Controls	☐	☐
	☐ NRCA-MCH-10-A- Hydronic System Variable Flow Controls	☐	☐
	☐ NRCA-MCH-11-A – Auto Demand Shed Controls	☐	☐
	☐ NRCA-MCH-12-A- Packaged Direct Expansion Units	☐	☐
	☐ NRCA-MCH-13-A- Air Handling Units and Zone Terminal Units	☐	☐
	☐ NRCA-MCH-14-A- Distributed Energy Storage	☐	☐
	☐ NRCA-MCH-15-A – Thermal Energy Storage	☐	☐
	☐ NRCA-MCH-16-A- Supply Air Temp Reset Controls	☐	☐
	☐ NRCA-MCH-17-A – Condensate Water Temp Reset Controls	☐	☐
	☐ NRCA-MCH-18-A- Energy Management Controls Systems	☐	☐
	☐ NRCV-MCH-04-H- Duct Leakage Test	☐	☐

H. CERTIFICATE OF INSTALLATION, CERTIFICATE OF ACCEPTANCE & CERTIFICATE OF VERIFICATION SUMMARY (NRCI/NRCA/NRCV) –

Documentation Author to indicate which Certificates must be submitted for the features to be recognized for compliance
(Retain copies and verify forms are completed and signed to post in field for Field Inspector to verify).
See Tables G. and H. in MCH and LTI Details Sections for Acceptance Tests and forms by equipment.

Building Component	Compliance Forms *(required for submittal)*	Confirmed Pass	Confirmed Fail
Plumbing	☐ NRCI-PLB-01-E - For all buildings with Plumbing Systems	☐	☐
	☐ NRCI-PLB-02-E - required on central systems in high-rise residential, hotel/motel application.	☐	☐
	☐ NRCI-PLB-03-E - Single dwelling unit systems in high-rise residential, hotel/motel application.	☐	☐
	☐ NRCI-PLB-21-E - HERS verified central systems in high-rise residential, hotel/motel application.	☐	☐
	☐ NRCI-PLB-22-E - HERS verified single dwelling unit systems in high-rise residential, hotel/motel application.	☐	☐
	☐ NRCV-PLB-21-H- HERS verified central systems in high-rise residential, hotel/motel application.	☐	☐
	☐ NRCV-PLB-22-H - HERS verified single dwelling unit systems in high-rise residential, hotel/motel application.	☐	☐
	☐ NRCI-STH-01-E - Any solar water heating	☐	☐
Indoor Lighting	☒ NRCI-LTI-01-E - For all buildings	☐	☐
	☐ NRCI-LTI-02-E - Lighting control system, or for an Energy Management Control System (EMCS)	☐	☐
	☐ NRCI-LTI-03-E - Line-voltage track lighting integral current limiter, or for a supplementary overcurrent protection panel used to energize only line-voltage track lighting	☐	☐
	☐ NRCI-LTI-04-E - Two interlocked systems serving an auditorium, a convention center, a conference room, or a theater	☐	☐
	☐ NRCI-LTI-05-E - Lighting Control Credit Power Adjustment Factor (PAF)	☐	☐
	☐ NRCI-LTI-06-E - Additional wattage installed in a video conferencing studio	☐	☐
	☒ NRCA-LTI-02-A - Occupancy sensors and automatic time switch controls.	☐	☐
	☒ NRCA-LTI-03-A - Automatic daylighting controls	☐	☐
	☒ NRCA-LTI-04-A - Demand responsive lighting controls	☐	☐
Outdoor Lighting	☐ NRCI-LTO-01-E – Outdoor Lighting	☐	☐
	☐ NRCI-LTO-02-E- EMCS Lighting Control System	☐	☐
	☐ NRCA-LTO-02-A - Outdoor Lighting Control	☐	☐
Sign Lighting	☐ NRCI-LTS-01-E – Sign Lighting	☐	☐
Electrical	☐ NRCI-ELC-01-E - Electrical Power Distribution	☐	☐
Photovoltaic	☐ NRCI-SPV-01-E Photovoltaic Systems	☐	☐

H. CERTIFICATE OF INSTALLATION, CERTIFICATE OF ACCEPTANCE & CERTIFICATE OF VERIFICATION SUMMARY (NRCI/NRCA/NRCV) –

Documentation Author to indicate which Certificates must be submitted for the features to be recognized for compliance
(Retain copies and verify forms are completed and signed to post in field for Field Inspector to verify).
See Tables G. and H. in MCH and LTI Details Sections for Acceptance Tests and forms by equipment.

Building Component	Compliance Forms *(required for submittal)*	Confirmed Pass	Confirmed Fail
Covered Process	☐ NRCI-PRC-01-E Covered Processes	☐	☐
	☐ NRCA-PRC-01-F- Compressed Air Systems	☐	☐
	☐ NRCA-PRC-02-F- Kitchen Exhaust	☐	☐
	☐ NRCA-PRC-03-F- Garage Exhaust	☐	☐
	☐ NRCA-PRC-04-F- Refrigerated Warehouse- Evaporator Fan Motor Controls	☐	☐
	☐ NRCA-PRC-05-F- Refrigerated Warehouse- Evaporative Condenser Controls	☐	☐
	☐ NRCA-PRC-06-F- Refrigerated Warehouse- Air Cooled Condenser Controls	☐	☐
	☐ NRCA-PRC-07F- Refrigerated Warehouse- Variable Speed Compressor	☐	☐
	☐ NRCA-PRC-08-F- Electrical Resistance Underslab Heating System	☐	☐

I. ENVELOPE GENERAL INFORMATION (See NRCC-PRF-ENV-DETAILS for more information)

					Confirmed Pass	Confirmed Fail
1.	Total Conditioned Floor Area	21,903 ft²	**5.**	Number of Floors Above Grade	1	
2.	Total Unconditioned Floor Area	1,086 ft²	**6.**	Number of Floors Below Grade	0	
3.	Addition Conditioned Floor Area	0 ft²				
4.	Addition Unconditioned Floor Area	0 ft²				

7. Opaque Surfaces & Orientation	8. Total Gross Surface Area	9. Total Fenestration Area	10. Window to Wall Ratio	Pass	Fail
North Wall	4,931 ft²	105 ft²	02.1%	☐	☐
East Wall	4,671 ft²	131 ft²	02.8%	☐	☐
South Wall	4,232 ft²	499 ft²	11.8%	☐	☐
West Wall	3,935 ft²	821 ft²	20.9%	☐	☐
Total	**17,769 ft²**	**1,556 ft²**	**08.8%**	☐	☐
Roof	18,746 ft²	0 ft²	00.0%	☐	☐

J. FENESTRATION ASSEMBLY SUMMARY § 110.6

1. Fenestration Assembly Name / Tag or I.D.	2. Fenestration Type / Product Type / Frame Type	3. Certification Method[1]	4. Assembly Method	5. Area ft²	6. Overall U-factor	7. Overall SHGC	8. Overall VT	9. Status[2]	Confirmed Pass	Confirmed Fail
PPG SOLARBAN 70 XL Clear	VerticalFenestration FixedWindow N/A	NFRC Rated	SiteBuilt	1556	0.57	0.40	0.64	N	☐	☐

[1] Newly installed fenestration shall have a certified NFRC Label Certificate or use the CEC default tables found in Table 110.6-A and Table 110.6-B. Center of Glass (COG) values are for the glass-only, determined by the manufacturer, and are shown for ease of verification. Site-built fenestration values are calculated per Nonresidential Appendix NA6 and are used in the analysis.

[2] Status: N - New, A – Altered, E – Existing

Taking compliance credit for fenestration shading devices? (if "Yes", see NRCC-PRF-ENV-DETAILS for more information) No

K. OPAQUE SURFACE ASSEMBLY SUMMARY § 120.7/ § 140.3

1. Surface Name	2. Surface Type	3. Area (ft²)	4. Framing Type	5. Cavity R-Value	6. Continuous R-Value	7. U-Factor / F-Factor / C-Factor	8. Status[1]	Confirmed Pass	Confirmed Fail
Slab On Grade11	UndergroundFloor	18865	NA	0	NA	F-Factor: 0.730	N	☐	☐
2x6 MF Wall with R19 Batt13	ExteriorWall	19375	Metal	5	6	U-Factor: 0.103	N	☐	☐
High Theater House Roof15	Roof	8913	NA	0	30	U-Factor: 0.031	N	☐	☐
Int R-21 Wall17	InteriorWall	36234	Metal	21	NA	U-Factor: 0.140	N	☐	☐
Uninsulated Raised Slab F52	InteriorFloor	4124	NA	0	NA	U-Factor: 0.232	N	☐	☐
Lower Roof105	Roof	10469	NA	0	30	U-Factor: 0.032	N	☐	☐

[1] Status: N - New, A – Altered, E – Existing

L. ROOFING PRODUCT SUMMARY § 140.3

1. Product Type	2. Product Density (lb/ft³)	3. Aged Solar Reflectance	4. Thermal Emittance	5. SRI	6. Cool Roof Credit	7. Roofing Product Description	Confirmed Pass	Confirmed Fail
High Theater House Roof15	9.685	0.08	0.75	NA	No	NA	☐	☐
Lower Roof105	6.408	0.08	0.75	NA	No	NA	☐	☐

N. ECONOMIZER & FAN SYSTEMS SUMMARY[1] § 140.4

This Section Does Not Apply

[1] Mechanical ventilation calculations and exhaust fans are included in the NRCC-PRF-MCH-DETAILS section

O. EQUIPMENT CONTROLS § 120.2

This Section Does Not Apply

P. SYSTEM DISTRIBUTION SUMMARY § 120.4/ § 140.4(i)

This Section Does Not Apply

Multifamily or Hotel/ Motel Occupancy? (if "Yes", see NRCC-PRF-MCH-DETAILS for DHW system information) No

Q. INDOOR CONDITIONED LIGHTING GENERAL INFO (see NRCC-PRF-LTI-DETAILS for more info)[1] § 140.6

1. Occupancy Type [1]	2. Conditioned Floor Area [2] (ft²)	3. Installed Lighting Power (Watts)	4. Lighting Control Credits (Watts)	5. Additional (Custom) Allowance		Confirmed Pass	Confirmed Fail
				Area Category Footnotes (Watts)	Tailored Method (Watts)		
Corridors, Restrooms, Stairs, and Support Areas	6,791	3,836	0	0	0	☐	☐
Electrical, Mechanical, Telephone Rooms	973	432	0	0	0	☐	☐
Office (250 square feet in floor area or less)	242	224	0	0	0	☐	☐
Theater, Performance	6,177	8,487	0	0	0	☐	☐
Office (Greater than 250 square feet in floor area)	2,417	1,420	0	0	0	☐	☐
Lobby, Main Entry	1,214	1,098	0	0	0	☐	☐
Classrooms, Lecture, Training, Vocational Areas	2,982	2,403	0	0	0	☐	☐

QUATTROCCHI KWOK ARCHITECTS

Main Office:
636 Fifth Street, Santa Rosa, CA 95404
Pleasanton Office:
600 Main Street, Suite E,
Pleasanton, CA 94566
(707) 576-0829

LICENSED ARCHITECT
JIM THEISS
LICENSE # C22643
EXP JUNE 30, 2021
STATE OF CALIFORNIA

SIGNED: AUGUST 13, 2019

FREEDOM HIGH SCHOOL

PERFORMING ARTS AND CTE FACILITIES

1050 NEROLY RD,
OAKLEY, CA 94561

LIBERTY UNION HIGH SCHOOL DISTRICT

ARCH PROJECT NO: 1739.00
DRAWN BY:
DRAWING SCALE:
PTN: 61721-0068

BID SET

AUGUST 13, 2019

SHEET TITLE

TITLE 24 BLDG A

SHEET NUMBER

T-1

BIM Server: BIMCLOUD-QKA - BIMcloud/1739.00 - Freedom High School/1739.00 FREEDOM HS Performing Arts Center,8/6/2019,5:15 PM

Q. INDOOR CONDITIONED LIGHTING GENERAL INFO (see NRCC-PRF-LTI-DETAILS for more info)[3] — **§ 140.6**

Confirmed

1. Occupancy Type [1]	2. Conditioned Floor Area [2] (ft²)	3. Installed Lighting Power (Watts)	4. Lighting Control Credits (Watts)	5. Additional (Custom) Allowance		Pass	Fail
				Area Category Footnotes (Watts)	Tailored Method (Watts)		
Commercial and Industrial Storage Areas (conditioned or unconditioned)	127	57	0	0	0	☐	☐
Locker/Dressing Room	979	937	0	0	0	☐	☐
Building Totals:	**21,902**	**18,894**	**0**	**0**	**0**		

[1] See Table 140.6-C
[2] See NRCC-LTI-01-E for unconditioned spaces
[3] Lighting information for existing spaces modeled is not included in the table

R. INDOOR CONDITIONED LIGHTING SCHEDULE (Adapted from NRCC-LTI-01-E)[1] — **§ 130.0**

Confirmed

Luminaire Schedule (includes all permanent installed lighting in conditioned space, and portable lighting over 0.3 w/ft² in offices)		Installed Watts (Conditioned)					Pass	Fail
Name or Item Tag	Complete Luminaire Description (i.e., 3-lamp fluorescent troffer, F32T8, one dimmable electronic ballast)	Watts per luminaire	How Wattage is Determined: CEC Default from NA8	How Wattage is Determined: According to §130.0(c)	Total Number Luminaires	Installed Watts		
B1	B1	147	No	Yes	22	3,234	☐	☐
C12	C12	33	No	Yes	7	231	☐	☐
C12A	C12A	33	No	Yes	7	231	☐	☐
C12C	C12C	33	No	Yes	3	99	☐	☐
C13 (7w/ft)	C13 (7w/ft)	7	No	Yes	32	224	☐	☐
C14	C14	67	No	Yes	42	2,814	☐	☐
C15	C15	41	No	Yes	16	656	☐	☐
C15A	C15A	81	No	Yes	2	162	☐	☐
C18	C18	21	No	Yes	3	63	☐	☐
C2	C2	14	No	Yes	8	109	☐	☐

R. INDOOR CONDITIONED LIGHTING SCHEDULE (Adapted from NRCC-LTI-01-E)[1] — **§ 130.0**

Confirmed

Luminaire Schedule (includes all permanent installed lighting in conditioned space, and portable lighting over 0.3 w/ft² in offices)		Installed Watts (Conditioned)					Pass	Fail
Name or Item Tag	Complete Luminaire Description (i.e., 3-lamp fluorescent troffer, F32T8, one dimmable electronic ballast)	Watts per luminaire	How Wattage is Determined: CEC Default from NA8	How Wattage is Determined: According to §130.0(c)	Total Number Luminaires	Installed Watts		
C2A	C2A	14	No	Yes	9	123	☐	☐
C3	C3	29	No	Yes	21	598	☐	☐
C4	C4	30	No	Yes	7	210	☐	☐
C4A	C4A	15	No	Yes	7	105	☐	☐
C4B	C4B	15	No	Yes	4	60	☐	☐
C6	C6	55	No	Yes	6	330	☐	☐
C6A	C6A	55	No	Yes	1	55	☐	☐
C7	C7	30	No	Yes	8	240	☐	☐
C7A	C7A	60	No	Yes	4	240	☐	☐
C8	C8	29	No	Yes	4	114	☐	☐
C9	C9	55	No	Yes	1	55	☐	☐
C9A	C9A	35	No	Yes	21	739	☐	☐
C9B	C9B	35	No	Yes	2	70	☐	☐
C9C	C9C	55	No	Yes	2	110	☐	☐
H1	H1 (3.8w/ft)	4	No	Yes	1	3	☐	☐
P3	P3	100	No	Yes	12	1,200	☐	☐
P4	P4	130	No	Yes	3	390	☐	☐
P5 (16.2w/ft)	P5 (16.2w/ft)	16	No	Yes	144	2,332	☐	☐
P6	P6	27	No	Yes	18	477	☐	☐
W1	W1	4	No	Yes	29	116	☐	☐
W1A	W1A	4	No	Yes	57	228	☐	☐
W2 (10.6w/ft)	W2 (10.6w/ft)	11	No	Yes	30	318	☐	☐
W2A (10.6w/ft)	W2A (10.6w/ft)	11	No	Yes	4	42	☐	☐

R. INDOOR CONDITIONED LIGHTING SCHEDULE (Adapted from NRCC-LTI-01-E)[1] — **§ 130.0**

Confirmed

Luminaire Schedule (includes all permanent installed lighting in conditioned space, and portable lighting over 0.3 w/ft² in offices)		Installed Watts (Conditioned)					Pass	Fail
Name or Item Tag	Complete Luminaire Description (i.e., 3-lamp fluorescent troffer, F32T8, one dimmable electronic ballast)	Watts per luminaire	How Wattage is Determined: CEC Default from NA8	How Wattage is Determined: According to §130.0(c)	Total Number Luminaires	Installed Watts		
W4 (16.2w/ft)	W4 (16.2w/ft)	16	No	Yes	42	680	☐	☐
W4 W/FT	W4 (16.2w/ft)	16	No	Yes	58	939	☐	☐
W5	W5	16	No	Yes	20	316	☐	☐
W5A (7.9w/ft)	W5A (7.9w/ft)	8	No	Yes	48	379	☐	☐
W8 (7.2w/ft)	W8 (7.2w/ft)	7	No	Yes	64	460	☐	☐
W9	W9	11	No	Yes	12	135	☐	☐

[1] If lighting power densities were used in the compliance model Building Departments will need to check prescriptive forms for Luminaire Schedule details.

S1. COVERED PROCESS SUMMARY – ENCLOSED PARKING GARAGES — **§ 140.9**

This Section Does Not Apply

S2. COVERED PROCESS SUMMARY – COMMERCIAL KITCHENS — **§ 140.9**

This Section Does Not Apply

S3. COVERED PROCESS SUMMARY – COMPUTER ROOMS — **§ 140.9**

This Section Does Not Apply

S4. COVERED PROCESS SUMMARY – LABORATORY EXHAUSTS — **§ 140.9**

This Section Does Not Apply

T. UNMET LOAD HOURS

This Section Does Not Apply

U. ENERGY USE SUMMARY

Energy Component	Standard Design Site (MWh)	Proposed Design Site (MWh)	Margin (MWh)	Standard Design Site (MBtu)	Proposed Design Site (MBtu)	Margin (MBtu)
Space Heating	0.0	0.0	--	372.1	341.2	30.9
Space Cooling	54.3	53.9	0.4	--	--	--
Indoor Fans	31.1	30.8	0.3	--	--	--
Heat Rejection	--	--	--	--	--	--
Pumps & Misc.	4.2	3.9	0.3	--	--	--
Domestic Hot Water	--	--	--	--	--	--
Indoor Lighting	57.5	53.0	4.5	--	--	--
COMPLIANCE TOTAL	**147.1**	**141.6**	**5.5**	**372.1**	**341.2**	**30.9**
Receptacle	48.6	48.6	0.0	--	--	--
Process	--	--	--	--	--	--
Other Ltg	--	--	--	--	--	--
Process Motors	--	--	--	--	--	--
TOTAL	**195.7**	**190.2**	**5.5**	**372.1**	**341.2**	**30.9**

DOCUMENTATION AUTHOR'S DECLARATION STATEMENT — **§ 10-103**

I certify that this Certificate of Compliance documentation is accurate and complete.

Documentation Author Name: Matthew Hargadon	Signature: Matt Hargadon
Company: Guttmann & Blaevoet Consulting Engineers	
Address: 2351 Powell Street	Signature Date: 7/19/2019
City/State/Zip: San Francisco CA 94133	CEA Identification (if applicable):
Phone: (415) 655-4000	

RESPONSIBLE PERSON'S DECLARATION STATEMENT

I certify the following under penalty of perjury, under the laws of the State of California:

1. I hereby affirm that I am eligible under the provisions of Division 3 of the Business and Professions Code to sign this document as the person responsible for its preparation; and that I am licensed in the State of California as a civil engineer, mechanical engineer, electrical engineer, or I am a licensed architect.
2. I affirm that I am eligible under the provisions of Division 3 of the Business and Professions Code by section 5537.2 or 6737.3 to sign this document as the person responsible for its preparation; and that I am a licensed contractor performing this work.
3. I affirm that I am eligible under Division 3 of the Business and Professions Code to sign this document because it pertains to a structure or type of work described as exempt pursuant to Business and Professions Code Sections 5537, 5538 and 6737.1.

Responsible Envelope Designer Name:	Signature:	
Company: Quattrocchi Kwok Architects		
Address: 636 5th Street	Date Signed: 8/1/19	
City/State/Zip: Santa Rosa CA 95404	Declaration Statement Type: 1	
Phone: 707-576-0829	Title: Principal	License #: C22643
Responsible Lighting Designer Name: Pieter Colenbrander	Signature:	
Company: O'Mahony & Myer		
Address: 4340 Redwood Hwt, Suite 245	Date Signed: 8/1/19	
City/State/Zip: San Rafael CA 94903	Declaration Statement Type: 1	
Phone: (415) 492-0420	Title: Principal	License #: E14738
Responsible Mechanical Designer Name:	Signature: NOT IN SCOPE	
Company: Costa Engineers inc.		
Address: 3274 Villa Lane	Date Signed:	
City/State/Zip: Napa CA 94558	Declaration Statement Type:	
Phone: (707) 252-9177	Title:	License #:

NRCC-PRF-ENV-DETAILS -SECTION START-

A. OPAQUE SURFACE ASSEMBLY DETAILS — Confirmed

1. Surface Name	2. Surface Type	3. Description of Assembly Layers	4. Notes	Pass	Fail
Slab On Grade11	UndergroundFloor	Slab Type = UnheatedSlabOnGrade Insulation Orientation = None Insulation R-Value = R0		☐	☐
2x6 MF Wall with R19 Batt13	ExteriorWall	Stucco - 7/8 in. Vapor permeable felt - 1/8 in. Compliance Insulation R6.46 Gypsum Board - 3/8 in. Metal framed wall, 16in. OC, 3.5in., R-5 Gypsum Board - 5/8 in.		☐	☐
High Theater House Roof15	Roof	Metal Deck - 1/16 in. Gypsum Board - 5/8 in. Compliance Insulation R30.00 Gypsum Board - 5/8 in. Metal Deck - 1/16 in.		☐	☐
Int R-21 Wall17	InteriorWall	Gypsum Board - 5/8 in. Metal framed wall, 24in. OC, 5.5in., R-21 Gypsum Board - 5/8 in.		☐	☐
Uninsulated Raised Slab F52	InteriorFloor	Compliance Insulation R0.10 Concrete - 140 lb/ft3 - 4 in. Carpet - 3/4 in.		☐	☐
Lower Roof105	Roof	Built-up roofing - 3/8 in. Plywood - 1/2 in. Compliance Insulation R30.00 Metal Deck - 1/16 in.		☐	☐

B. OVERHANG DETAILS (Adapted from NRCC-ENV-02-E)

This Section Does Not Apply

C. OPAQUE DOOR SUMMARY — Confirmed

1. Opaque Door Assembly Name / Tag or I.D.	2. Door Type	3. Certification Method	4. Operation	5. Area	6. Overall U-factor	7. Status[1]	Pass	Fail
STD_DOOR95	MetalInsulatedSwingingDoor	DefaultPerformance	NonSwinging	241	0.102	N	☐	☐

[1] Status: N - New, A – Altered, E – Existing

NRCC-PRF-MCH-DETAILS -SECTION START-

A. MECHANICAL VENTILATION AND REHEAT ***(Adapted from 2016-NRCC-MCH-03-E)***

This Section Does Not Apply

B. ZONAL SYSTEM AND TERMINAL UNIT SUMMARY

This Section Does Not Apply

C. EXHAUST FAN SUMMARY

This Section Does Not Apply

D. DHW EQUIPMENT SUMMARY – ***(Adapted from NRCC-PLB-01)***

This Section Does Not Apply

E. MULTI-FAMILY CENTRAL DHW SYSTEM DETAILS

This Section Does Not Apply

F. SOLAR HOT WATER HEATING SUMMARY (Adapted from NRCC-STH-01)

This Section Does Not Apply

G. MECHANICAL HVAC ACCEPTANCE TESTS & FORMS ***(Adapted from 2016-NRCC-MCH-01-E)*** — **§ RA4**

This Section Does Not Apply

H. EVAPORATIVE COOLER SUMMARY

This Section Does Not Apply

NRCC-PRF-LTI-DETAILS -SECTION START-

A. INDOOR CONDITIONED LIGHTING CONTROL CREDITS (Adapted from NRCC-LTI-02-E) — **§ 140.6**

This Section Does Not Apply

B. INDOOR CONDITIONED LIGHTING MANDATORY LIGHTING CONTROLS (Adapted from NRCC-LTI-02-E) — **§ 130.1**

This Section Does Not Apply

§130.1(a) = Manual area controls; §130.0(b) = Multi Level; §130.1(c) = Auto Shut-Off; §130.1(d) = Mandatory Daylight; §130.1(e) = Demand Responsive

C. TAILORED METHOD CONDITIONED LIGHTING POWER ALLOWANCE SUMMARY AND CHECKLIST (Adapted from NRCC-LTI-04-E) — **§ 140.6**

General lighting power (see Table D)	0
General lighting power from special function areas (see Table E)	NA
Additional "use it or lose it" (See Table G)	0
Total watts	0

D. GENERAL LIGHTING POWER (Adapted from NRCC-LTI-04-E) — **§ 140.6-D**

This Section Does Not Apply

E. GENERAL LIGHTING FROM SPECIAL FUNCTION AREAS (Adapted from NRCC-LTI-04-E) — **§ 140.6(c) 3H**

Room Number	Primary Function Area	Illuminance Value (LUX)	Room Cavity Ratio (Table G)	Allowed LPD	Floor Area (ft²)	Allowed Watts	Confirmed: Pass	Confirmed: Fail
NA	NA	NA	NA	NA	NA	NA	☐	☐

Note: Tailored Method for Special Function Areas is not currently implemented

F. ROOM CAVITY RATIO (Adapted from NRCC-LTI-04-E)

Rectangular Spaces

Room Number	Task/Activity Description	Room Length (ft)	Room Width (ft)	Room Cavity Height (ft)	RCR	Confirmed: Pass	Confirmed: Fail
NA	NA	NA	NA	NA	NA	☐	☐

Non-Rectangular Spaces

This Section Does Not Apply

Note: All applicable spaces are listed under the Non-Rectangular Spaces table

G. ADDITIONAL "USE IT OR LOSE IT" (Adapted from NRCC-LTI-04-E)

1. Wall Display	2. Combined Floor Display and Task Lighting	3. Combined Ornamental and Special Effects Lighting	4. Very Valuable Merchandise	Allowed Watts	Confirmed: Pass	Confirmed: Fail
0	0	0	0	**0**	☐	☐

5. Wall Display

This Section Does Not Apply

6. Floor Display and Task Lighting

This Section Does Not Apply

7. Combined Ornamental and Special Effects Lighting

This Section Does Not Apply

8. Very Valuable Merchandise

This Section Does Not Apply

H. INDOOR & OUTDOOR LIGHTING ACCEPTANCE TESTS & FORMS (Adapted from NRCC-LTI-01-E and NRCC-LTO-01-E) — **§ 130.4**

Declaration of Required Acceptance Certificates (NRCA) –Acceptance Certificates that must be verified in the field. (Retain copies and verify forms are completed and signed to post in field for Field Inspector to verify).

Test Description		Indoor			Outdoor	Confirmed	
		NRCA-LTI-02-A	NRCA-LTI-03-A	NRCA-LTI-04-A	NRCA-LTO-02-A		
Equipment Requiring Testing or Verification	# of units	Occ Sensors / Auto Time Switch	Auto Daylight	Demand Responsive	Outdoor Controls	Pass	Fail
Occupant Sensors	0	☒	☐	☐	☐	☐	☐
Automatic Time Switch	0	☒	☐	☐	☐	☐	☐
Automatic Daylighting	0	☐	☒	☐	☐	☐	☐

QUATTROCCHI KWOK ARCHITECTS

Main Office:
636 Fifth Street, Santa Rosa, CA 95404
Pleasanton Office:
600 Main Street, Suite E,
Pleasanton, CA 94566
(707) 576-0829

LICENSED ARCHITECT
JIM THEISS
LICENSE # C22643
EXP JUNE 30, 2021
STATE OF CALIFORNIA

SIGNED: AUGUST 13, 2019

FREEDOM HIGH SCHOOL

PERFORMING ARTS AND CTE FACILITIES

1050 NEROLY RD,
OAKLEY, CA 94561

LIBERTY UNION HIGH SCHOOL DISTRICT

ARCH PROJECT NO: 1739.00
DRAWN BY:
DRAWING SCALE:
PTN: 61721-0068

BID SET

AUGUST 13, 2019

SHEET TITLE

TITLE 24 BLDG A

SHEET NUMBER

T-2

BIM Server: BIMCLOUD-QKA - BIMcloud/1739.00 - Freedom High School/1739.00 FREEDOM HS Performing Arts Center;8/6/2019;5:15 PM

Project Name:	Freedom High School - Building A	NRCC-PRF-01-E	Page 19 of 19
Project Address:	1050 Neroly Road Oakley 94561	Calculation Date/Time:	14:16, Fri, Jul 19, 2019
Compliance Scope:	NewEnvelopeAndLighting	Input File Name:	Freedom HS_BuildingA1.cibd16x

H. INDOOR & OUTDOOR LIGHTING ACCEPTANCE TESTS & FORMS (Adapted from NRCC-LTI-01-E and NRCC-LTO-01-E) **§ 130.4**

Declaration of Required Acceptance Certificates (NRCA) –Acceptance Certificates that must be verified in the field. (Retain copies and verify forms are completed and signed to post in field for Field Inspector to verify).

Test Description		Indoor			Outdoor	Confirmed	
		NRCA-LTI-02-A	NRCA-LTI-03-A	NRCA-LTI-04-A	NRCA-LTO-02-A		
Equipment Requiring Testing or Verification	# of units	Occ Sensors / Auto Time Switch	Auto Daylight	Demand Responsive	Outdoor Controls	Pass	Fail
Demand Responsive	1	☐	☐	☒	☐	☐	☐
Outdoor Controls	0	☐	☐	☐	☐	☐	☐

ENVELOPE MANDATORY MEASURES: NONRESIDENTIAL ENV-MM

Project Name	Date
Freedom High School - Building A	*7/19/2019*

DESCRIPTION

Building Envelope Measures:

§110.8(a):	Installed insulating material shall have been certified by the manufacturer to comply with the California Quality Standards for insulating material, Title 20 Chapter 4, Article 3.
§110.8(c):	All Insulating Materials shall be installed in compliance with the flame spread rating and smoke density requirements of Sections 2602 and 707 of Title 24, Part 2.
§110.8(g):	Heated slab floors shall be insulated according to the requirements in Table 110.8-A.
§110.7(a):	All Exterior Joints and openings in the building that are observable sources of air leakage shall be caulked, gasketed, weatherstripped or otherwise sealed.
§110.6(a):	Manufactured fenestration products and exterior doors shall have air infiltration rates not exceeding 0.3 cfm/ft.^{2} of window area, 0.3 cfm/ft.^{2} of door area for residential doors, 0.3 cfm/ft.^{2} of door area for nonresidential single doors (swinging and sliding), and 1.0 cfm/ft.^{2} for nonresidential double doors (swinging).
§110.6(a):	Fenestration U-factor shall be rated in accordance with NFRC 100, or the applicable default U-factor.
§110.6(a) :	Fenestration SHGC shall be rated in accordance with NFRC 200, or NFRC 100 for site-built fenestration, or the applicable default SHGC.
§110.6(b):	Site Constructed Doors, Windows and Skylights shall be caulked between the unit and the building, and shall be weatherstrippped (except for unframed glass doors and fire doors).
§120.7(a):	The opaque portions of the roof/ceiling that separates conditioned spaces from unconditioned spaces or ambient air shall meet the applicable U-Factor requirements as follows: **Metal Building**- The weighted average U-factor of the roof assembly shall not exceed 0.098. **Wood Framed and Others**- The weighted average U-factor of the roof assembly shall not exceed 0.075.
§120.7(b):	The opaque portions of walls that separate conditioned spaces from unconditioned spaces or ambient air shall meet the applicable U-factor as follows: **Metal Building**- The weighted average U-factor of the wall assembly shall not exceed 0.113. **Metal Framed**- The weighted average U-factor of the wall assembly shall not exceed 0.151. **Light Mass Walls**- A 6 inch or greater Hollow Core Concrete Masonry Unit shall have a U-factor not to exceed 0.440. **Heavy Mass Walls**- An 8 inch or greater Hollow Core Concrete Masonry Unit shall have a U-factor not to exceed 0.690. **Wood Framed and Others**- The weighted average U-factor of the wall assembly shall not exceed 0.110. **Spandrel Panels and Opaque Curtain Wall**- The weighted average U-factor of the spandrel panels and opaque curtain wall assembly shall not exceed 0.280. **Demising Walls**-. The opaque portions of framed demising walls shall meet the requirements of Item A or B below: A. Wood framed walls shall be insulated to meet a U-factor not greater than 0.099. B. Metal Framed walls shall be insulated to meet a U-factor not greater than 0.151.
§120.7(c):	The opaque portions of floors and soffits that separate conditioned spaces from unconditioned spaces or ambient air shall meet the applicable U-Factor requirements as follows: **Raised Mass Floors**- Shall have a minimum of 3 inches of lightweight concrete over a metal deck or the weighted average U-factor of the floor assembly shall not exceed 0.269. **Other Floors**-The weighted average U-factor of the floor assembly shall not exceed 0.071.

STATE OF CALIFORNIA
MECHANICAL SYSTEMS
CEC-NRCC-MCH-01-E (Revised 01/16) CALIFORNIA ENERGY COMMISSION

CERTIFICATE OF COMPLIANCE	NRCC-MCH-01-E
Mechanical Systems	(Page 1 of 4)
Project Name: Freedom High School - Building A	Date Prepared: 7/19/2019

A. MECHANICAL COMPLIANCE DOCUMENTS & WORKSHEETS (check box if worksheet is included)

For detailed instructions on the use of this and all Energy Efficiency Standards compliance forms, refer to the 2016 Nonresidential Manual
Note: The Enforcement Agency may require all forms to be incorporated onto the building plans.

YES	NO	Comp. Doc./Worksheet #	Title
☑	☐	NRCC-MCH-01-E (Part 1 of 3)	Certificate of Compliance, Declaration. Required on plans for all submittals.
☑	☐	NRCC-MCH-01-E (Part 2 of 3)	Certificate of Compliance, Required Acceptance Tests (MCH-02-A to 11-A). Required on plans for all submittals.
☑	☐	NRCC-MCH-01-E (Part 3 of 3)	Certificate of Compliance, Required Acceptance Tests (MCH-12-A to 18-A). Required on plans where applicable.
☑	☐	NRCC-MCH-02-E (Part 1 of 2)	Mechanical Dry Equipment Summary is required for all submittals with Central Air Systems. It is optional on plans.
☑	☐	NRCC-MCH-02-E (Part 2 of 2)	Mechanical Wet Equipment Summary is required for all submittals with chilled water, hot water or condenser water systems. It is optional on plans.
☑	☐	NRCC-MCH-03-E	Mechanical Ventilation and Reheat is required for all submittals with multiple zone heating and cooling systems. It is optional on plans.
☑	☐	NRCC-MCH-07-E (Part 1 of 2)	Power Consumption of Fans. Required on plans where applicable
☑	☐	NRCC-MCH-07-E (Part 2 of 2)	Power Consumption of Fans, Declaration. Required on plans where applicable

STATE OF CALIFORNIA
MECHANICAL SYSTEMS
CEC-NRCC-MCH-01-E (Revised 01/16) CALIFORNIA ENERGY COMMISSION

CERTIFICATE OF COMPLIANCE	NRCC-MCH-01-E
Mechanical Systems	(Page 2 of 4)
Project Name: Freedom High School - Building A	Date Prepared: 7/19/2019

B. MECHANICAL HVAC ACCEPTANCE FORMS (check box for required compliance documents)

Test Performed By:

Designer:
This compliance document is to be used by the designer and attached to the plans. Listed below are all the acceptance tests for HVAC systems. The designer is required to check the applicable boxes for all acceptance tests that apply and list all equipment that requires an acceptance test. All equipment of the same type that requires a test, list the equipment description and the number of systems.

Installing Contractor:
The contractor who installed the equipment is responsible to either conduct the acceptance test themselves or have a qualified entity run the test for them. If more than one person has responsibility for the acceptance testing, each person shall sign and submit the Certificate of Acceptance applicable to the portion of the construction or installation for which they are responsible.

Enforcement Agency:
Plancheck – The NRCC-MCH-01-E compliance document is not considered a completed document and is not to be accepted by the building department unless the correct boxes are checked.
Inspector - Before occupancy permit is granted all newly installed process systems must be tested to ensure proper operations.

Test Description		MCH-02-A	MCH-03-A	MCH-04-A	MCH-05-A	MCH-06-A	MCH-07-A	MCH-08-A	MCH-09-A	MCH-10-A	MCH-11-A
Equipment Requiring Testing or Verification	# of Units	Outdoor Air	Single Zone Unitary	Air Distribution Ducts	Economizer Controls	Demand Control Ventilation (DCV)	Supply Fan VAV	Valve Leakage Test	Supply Water Temp. Reset	Hydronic System Variable Flow Control	Automatic Demand Shed Control
FC-4	1	☑	☑	☐	☐	☐	☐	☐	☐	☐	☐
FC-5	1	☑	☑	☐	☐	☐	☐	☐	☐	☐	☐
FC-6	1	☑	☑	☐	☐	☐	☐	☐	☐	☐	☐
FC-7	1	☑	☑	☐	☐	☐	☐	☐	☐	☐	☐
		☐	☐	☐	☐	☐	☐	☐	☐	☐	☐
		☐	☐	☐	☐	☐	☐	☐	☐	☐	☐
		☐	☐	☐	☐	☐	☐	☐	☐	☐	☐
		☐	☐	☐	☐	☐	☐	☐	☐	☐	☐
		☐	☐	☐	☐	☐	☐	☐	☐	☐	☐
		☐	☐	☐	☐	☐	☐	☐	☐	☐	☐

STATE OF CALIFORNIA
MECHANICAL SYSTEMS
CEC-NRCC-MCH-01-E (Revised 01/16) CALIFORNIA ENERGY COMMISSION

CERTIFICATE OF COMPLIANCE	NRCC-MCH-01-E
Mechanical Systems	(Page 3 of 4)
Project Name: Freedom High School - Building A	Date Prepared: 7/19/2019

C. MECHANICAL HVAC ACCEPTANCE FORMS (check box for required compliance documents)

Test Performed By:

Designer:
This compliance document is to be used by the designer and attached to the plans. Listed below are all the acceptance tests for HVAC systems. The designer is required to check the applicable boxes for all acceptance tests that apply and list all equipment that requires an acceptance test. All equipment of the same type that requires a test, list the equipment description and the number of systems.

Installing Contractor:
The contractor who installed the equipment is responsible to either conduct the acceptance test themselves or have a qualified entity run the test for them. If more than one person has responsibility for the acceptance testing, each person shall sign and submit the Certificate of Acceptance applicable to the portion of the construction or installation for which they are responsible.

Enforcement Agency:
Plancheck – The NRCC-MCH-01-E compliance document is not considered a completed document and is not to be accepted by the building department unless the correct boxes are checked.
Inspector - Before occupancy permit is granted all newly installed process systems must be tested to ensure proper operations.

Test Description		MCH-12-A	MCH-13-A	MCH-14-A	MCH-15-A	MCH-16-A	MCH-17-A	MCH-18-A
Equipment Requiring Testing or Verification	# of Units	Fault Detection & Diagnostics for DX Units	Automatic Fault Detection & Diagnostics for Air & Zone	Distributed Energy Storage DX AC Systems	Thermal Energy Storage (TES) Systems	Supply Air Temperature Reset Controls	Condenser Water Reset Controls	ECMS
AC-1/AC-2 48L(	2	☑	☐	☐	☐	☐	☐	☐
AC-3 48LCD01	1	☑	☐	☐	☐	☐	☐	☐
AC-4 48LCD00	1	☑	☐	☐	☐	☐	☐	☐
AC-5 48LCD00	1	☐	☐	☐	☐	☐	☐	☐
AC-6 48LCD00	1	☐	☐	☐	☐	☐	☐	☐
AC-7 48LCD00	1	☐	☐	☐	☐	☐	☐	☐
AC-8 48LCD00	1	☐	☐	☐	☐	☐	☐	☐
AC-9 48LCD00	1	☑	☐	☐	☐	☐	☐	☐
FC-1	1	☐	☐	☐	☐	☐	☐	☐
FC-3	1	☐	☐	☐	☐	☐	☐	☐

STATE OF CALIFORNIA
MECHANICAL SYSTEMS
CEC-NRCC-MCH-01-E (Revised 01/16) CALIFORNIA ENERGY COMMISSION

CERTIFICATE OF COMPLIANCE	NRCC-MCH-01-E
Mechanical Systems	(Page 4 of 4)
Project Name: Freedom High School - Building A	Date Prepared: 7/19/2019

C. MECHANICAL HVAC ACCEPTANCE FORMS (check box for required compliance documents)

Test Performed By:

Designer:
This compliance document is to be used by the designer and attached to the plans. Listed below are all the acceptance tests for HVAC systems. The designer is required to check the applicable boxes for all acceptance tests that apply and list all equipment that requires an acceptance test. All equipment of the same type that requires a test, list the equipment description and the number of systems.

Installing Contractor:
The contractor who installed the equipment is responsible to either conduct the acceptance test themselves or have a qualified entity run the test for them. If more than one person has responsibility for the acceptance testing, each person shall sign and submit the Certificate of Acceptance applicable to the portion of the construction or installation for which they are responsible.

Enforcement Agency:
Plancheck – The NRCC-MCH-01-E compliance document is not considered a completed document and is not to be accepted by the building department unless the correct boxes are checked.
Inspector - Before occupancy permit is granted all newly installed process systems must be tested to ensure proper operations.

Test Description		MCH-12-A	MCH-13-A	MCH-14-A	MCH-15-A	MCH-16-A	MCH-17-A	MCH-18-A
Equipment Requiring Testing or Verification	# of Units	Fault Detection & Diagnostics for DX Units	Automatic Fault Detection & Diagnostics for Air & Zone	Distributed Energy Storage DX AC Systems	Thermal Energy Storage (TES) Systems	Supply Air Temperature Reset Controls	Condenser Water Reset Controls	ECMS
FC-4	1	☐	☐	☐	☐	☐	☐	☐
FC-5	1	☐	☐	☐	☐	☐	☐	☐
FC-6	1	☐	☐	☐	☐	☐	☐	☐
FC-7	1	☐	☐	☐	☐	☐	☐	☐
		☐	☐	☐	☐	☐	☐	☐
		☐	☐	☐	☐	☐	☐	☐
		☐	☐	☐	☐	☐	☐	☐
		☐	☐	☐	☐	☐	☐	☐
		☐	☐	☐	☐	☐	☐	☐

QUATTROCCHI KWOK ARCHITECTS
Main Office:
636 Fifth Street, Santa Rosa, CA 95404
Pleasanton Office:
600 Main Street, Suite E,
Pleasanton, CA 94566
(707) 576-0829

LICENSED ARCHITECT
JIM THEISS
LICENSE # C22643
EXP JUNE 30, 2021
STATE OF CALIFORNIA

SIGNED: AUGUST 13, 2019

FREEDOM HIGH SCHOOL

PERFORMING ARTS AND CTE FACILITIES

1050 NEROLY RD,
OAKLEY, CA 94561

LIBERTY UNION HIGH SCHOOL DISTRICT

ARCH PROJECT NO: 1739.00
DRAWN BY:
DRAWING SCALE:
PTN: 61721-0068

BID SET

AUGUST 13, 2019

SHEET TITLE

TITLE 24 BLDG A

SHEET NUMBER

T-3

BIM Server: BIMCLOUD-QKA - BIMcloud/1739.00 - Freedom High School/1739.00 FREEDOM HS Performing Arts Center:8/6/2019 5:15 PM

STATE OF CALIFORNIA
MECHANICAL SYSTEMS
CEC-NRCC-MCH-01-E (Revised 01/16) — CALIFORNIA ENERGY COMMISSION

CERTIFICATE OF COMPLIANCE	NRCC-MCH-01-E
Mechanical Systems	(Page 4 of 4)

Project Name: Freedom High School - Building A — Date Prepared: 7/19/2019

DOCUMENTATION AUTHOR'S DECLARATION STATEMENT

1. I certify that this Certificate of Compliance documentation is accurate and complete.

Documentation Author Name:	Matt Hargadon	Documentation Author Signature:	Matt Hargadon
Company:	Guttmann & Blaevoet Consulting Engineers	Signature Date:	7/19/2019
Address:	2351 Powell St.	CEA/ HERS Certification Identification (if applicable):	
City/State/Zip:	San Francisco/CA/94133	Phone:	4156554000

RESPONSIBLE PERSON'S DECLARATION STATEMENT

I certify the following under penalty of perjury, under the laws of the State of California:

1. The information provided on this Certificate of Compliance is true and correct.
2. I am eligible under Division 3 of the Business and Professions Code to accept responsibility for the building design or system design identified on this Certificate of Compliance (responsible designer).
3. The energy features and performance specifications, materials, components, and manufactured devices for the building design or system design identified on this Certificate of Compliance conform to the requirements of Title 24, Part 1 and Part 6 of the California Code of Regulations.
4. The building design features or system design features identified on this Certificate of Compliance are consistent with the information provided on other applicable compliance documents, worksheets, calculations, plans and specifications submitted to the enforcement agency for approval with this building permit application.
5. I will ensure that a completed signed copy of this Certificate of Compliance shall be made available with the building permit(s) issued for the building, and made available to the enforcement agency for all applicable inspections. I understand that a completed signed copy of this Certificate of Compliance is required to be included with the documentation the builder provides to the building owner at occupancy.

Responsible Designer Name:	Chris Del Core	Responsible Designer Signature:	
Company :	Costa Engineers inc.	Date Signed:	8-1-19
Address:	3274 Villa Lane	License:	M31600
City/State/Zip:	Napa, CA 94558	Phone:	(707) 252-9177

STATE OF CALIFORNIA
HVAC DRY & WET SYSTEM REQUIREMENTS
CEC-NRCC-MCH-02-E (Revised 01/16) — CALIFORNIA ENERGY COMMISSION

CERTIFICATE OF COMPLIANCE	NRCC-MCH-02-E
HVAC Dry & Wet System Requirements	(Page 1 of 3)

Project Name: Freedom High School - Building A — Date Prepared: 7/19/2019

A. Equipment Tags and System Description[1] – Dry Systems	AC-1/AC-2	AC-3	AC-4
MANDATORY MEASURES	***T-24 Sections***	***Reference to the Requirements in the Contract Documents[2]***	
Heating Equipment Efficiency[3]	110.1 or 110.2(a)	See T24 Pages	See T24 Pages	See T24 Pages
Cooling Equipment Efficiency[3]	110.1 or 110.2(a)	See T24 Pages	See T24 Pages	See T24 Pages
HVAC or Heat Pump Thermostats	110.2(b), 110.2(c)	See T24 Pages	See T24 Pages	See T24 Pages
Furnace Standby Loss Control	110.2(d)	See T24 Pages	See T24 Pages	See T24 Pages
Low Leakage AHUs	110.2(f)	See T24 Pages	See T24 Pages	See T24 Pages
Ventilation[4]	120.1(b)	See T24 Pages	See T24 Pages	See T24 Pages
Demand Control Ventilation[5]	120.1(c)4	See T24 Pages	See T24 Pages	See T24 Pages
Occupant Sensor Ventilation Control[6]	120.1(c)5, 120.2(e)3	See T24 Pages	See T24 Pages	See T24 Pages
Shutoff and Reset Controls[7]	120.2(e)	See T24 Pages	See T24 Pages	See T24 Pages
Outdoor Air and Exhaust Damper Control	120.2(f)	See T24 Pages	See T24 Pages	See T24 Pages
Isolation Zones	120.2(g)	See T24 Pages	See T24 Pages	See T24 Pages
Automatic Demand Shed Controls	120.2(h)	See T24 Pages	See T24 Pages	See T24 Pages
Economizer FDD	120.2(i)	See T24 Pages	See T24 Pages	See T24 Pages
Duct Insulation	120.4	See T24 Pages	See T24 Pages	See T24 Pages
PRESCRIPTIVE MEASURES				
Equipment is sized in conformance with 140.4(a & b)	140.4(a & b)	Y Y/N	Y Y/N	Y Y/N
Supply Fan Pressure Control	140.4(c)	See T24 Pages	See T24 Pages	See T24 Pages
Simultaneous Heat/Cool[8]	140.4(d)	See T24 Pages	See T24 Pages	See T24 Pages
Economizer	140.4(e)	See T24 Pages	See T24 Pages	See T24 Pages
Heat and Cool Air Supply Reset	140.4(f)	See T24 Pages	See T24 Pages	See T24 Pages
Electric Resistance Heating[9]	140.4(g)	See T24 Pages	See T24 Pages	See T24 Pages
Duct Leakage Sealing and Testing[10]	140.4(l)	See T24 Pages	See T24 Pages	See T24 Pages

Notes:

1. Provide equipment tags (e.g. AHU 1 to 10) and system description (e.g. Single Duct VAV reheat) as appropriate. Multiple units with common requirements can be grouped together.
2. Provide references to plans (i.e. Drawing Sheet Numbers) and/or specifications (including Section name/number and relevant paragraphs) where each requirement is specified. Enter "N/A" if the requirement is not applicable to this system.
3. The referenced plans and specifications must include all of the following information: equipment tag, equipment nominal capacity, Title 24 minimum efficiency requirements, and actual rated equipment efficiencies. Where multiple efficiency requirements are applicable (e.g. full- and part-load) include all. Where appliance standards apply (110.1), identify where equipment is required to be listed per Title 20 1601 et seq.
4. Identify where the ventilation requirements are documented for each central HVAC system. Include references to both central unit schedules and sequences of operation. If one or more spaces is naturally ventilated identify where this is documented in the plans and specifications. Multiple zone central air systems must also provide a MCH-03-E compliance document.
5. If one or more spaces has demand controlled ventilation identify where it is specified including the sensor specifications and the sequence of operation.
6. If one or more space has occupant sensor ventilation control identify where it is specified including the sensor specifications and the sequence of operation
7. If the system is DDC identify the sequences for the system start/stop, optimal start, setback (if required) and setup (if required). For all systems identify the specification for the thermostats and time clocks (if applicable).
8. Identify where the heating, cooling and deadband airflows are scheduled for this system. Include a reference to the specification of the zone controls. Provide a MCH-03-E compliance document.
9. Enter N/A if there is no electric heating. If the system has electric heating indicate which exception to 140.4(g) applies.
10. If duct leakage sealing and testing is required, a MCH-04-A compliance document must be submitted.

STATE OF CALIFORNIA
HVAC DRY & WET SYSTEM REQUIREMENTS
CEC-NRCC-MCH-02-E (Revised 01/16) — CALIFORNIA ENERGY COMMISSION

CERTIFICATE OF COMPLIANCE	NRCC-MCH-02-E
HVAC Dry & Wet System Requirements	(Page 1 of 3)

Project Name: Freedom High School - Building A — Date Prepared: 7/19/2019

A. Equipment Tags and System Description[1] – Dry Systems	AC-5	AC-6	AC-7
MANDATORY MEASURES	***T-24 Sections***	***Reference to the Requirements in the Contract Documents[2]***	
Heating Equipment Efficiency[3]	110.1 or 110.2(a)	See T24 Pages	See T24 Pages	See T24 Pages
Cooling Equipment Efficiency[3]	110.1 or 110.2(a)	See T24 Pages	See T24 Pages	See T24 Pages
HVAC or Heat Pump Thermostats	110.2(b), 110.2(c)	See T24 Pages	See T24 Pages	See T24 Pages
Furnace Standby Loss Control	110.2(d)	See T24 Pages	See T24 Pages	See T24 Pages
Low Leakage AHUs	110.2(f)	See T24 Pages	See T24 Pages	See T24 Pages
Ventilation[4]	120.1(b)	See T24 Pages	See T24 Pages	See T24 Pages
Demand Control Ventilation[5]	120.1(c)4	See T24 Pages	See T24 Pages	See T24 Pages
Occupant Sensor Ventilation Control[6]	120.1(c)5, 120.2(e)3	See T24 Pages	See T24 Pages	See T24 Pages
Shutoff and Reset Controls[7]	120.2(e)	See T24 Pages	See T24 Pages	See T24 Pages
Outdoor Air and Exhaust Damper Control	120.2(f)	See T24 Pages	See T24 Pages	See T24 Pages
Isolation Zones	120.2(g)	See T24 Pages	See T24 Pages	See T24 Pages
Automatic Demand Shed Controls	120.2(h)	See T24 Pages	See T24 Pages	See T24 Pages
Economizer FDD	120.2(i)	See T24 Pages	See T24 Pages	See T24 Pages
Duct Insulation	120.4	See T24 Pages	See T24 Pages	See T24 Pages
PRESCRIPTIVE MEASURES				
Equipment is sized in conformance with 140.4(a & b)	140.4(a & b)	Y Y/N	Y Y/N	Y Y/N
Supply Fan Pressure Control	140.4(c)	See T24 Pages	See T24 Pages	See T24 Pages
Simultaneous Heat/Cool[8]	140.4(d)	See T24 Pages	See T24 Pages	See T24 Pages
Economizer	140.4(e)	See T24 Pages	See T24 Pages	See T24 Pages
Heat and Cool Air Supply Reset	140.4(f)	See T24 Pages	See T24 Pages	See T24 Pages
Electric Resistance Heating[9]	140.4(g)	See T24 Pages	See T24 Pages	See T24 Pages
Duct Leakage Sealing and Testing[10]	140.4(l)	See T24 Pages	See T24 Pages	See T24 Pages

Notes:

1. Provide equipment tags (e.g. AHU 1 to 10) and system description (e.g. Single Duct VAV reheat) as appropriate. Multiple units with common requirements can be grouped together.
2. Provide references to plans (i.e. Drawing Sheet Numbers) and/or specifications (including Section name/number and relevant paragraphs) where each requirement is specified. Enter "N/A" if the requirement is not applicable to this system.
3. The referenced plans and specifications must include all of the following information: equipment tag, equipment nominal capacity, Title 24 minimum efficiency requirements, and actual rated equipment efficiencies. Where multiple efficiency requirements are applicable (e.g. full- and part-load) include all. Where appliance standards apply (110.1), identify where equipment is required to be listed per Title 20 1601 et seq.
4. Identify where the ventilation requirements are documented for each central HVAC system. Include references to both central unit schedules and sequences of operation. If one or more spaces is naturally ventilated identify where this is documented in the plans and specifications. Multiple zone central air systems must also provide a MCH-03-E compliance document.
5. If one or more spaces has demand controlled ventilation identify where it is specified including the sensor specifications and the sequence of operation.
6. If one or more space has occupant sensor ventilation control identify where it is specified including the sensor specifications and the sequence of operation
7. If the system is DDC identify the sequences for the system start/stop, optimal start, setback (if required) and setup (if required). For all systems identify the specification for the thermostats and time clocks (if applicable).
8. Identify where the heating, cooling and deadband airflows are scheduled for this system. Include a reference to the specification of the zone controls. Provide a MCH-03-E compliance document.
9. Enter N/A if there is no electric heating. If the system has electric heating indicate which exception to 140.4(g) applies.
10. If duct leakage sealing and testing is required, a MCH-04-A compliance document must be submitted.

STATE OF CALIFORNIA
HVAC DRY & WET SYSTEM REQUIREMENTS
CEC-NRCC-MCH-02-E (Revised 01/16) — CALIFORNIA ENERGY COMMISSION

CERTIFICATE OF COMPLIANCE	NRCC-MCH-02-E
HVAC Dry & Wet System Requirements	(Page 1 of 3)

Project Name: Freedom High School - Building A — Date Prepared: 7/19/2019

A. Equipment Tags and System Description[1] – Dry Systems	AC-8	AC-9	FC-1
MANDATORY MEASURES	***T-24 Sections***	***Reference to the Requirements in the Contract Documents[2]***	
Heating Equipment Efficiency[3]	110.1 or 110.2(a)	See T24 Pages	See T24 Pages	See T24 Pages
Cooling Equipment Efficiency[3]	110.1 or 110.2(a)	See T24 Pages	See T24 Pages	See T24 Pages
HVAC or Heat Pump Thermostats	110.2(b), 110.2(c)	See T24 Pages	See T24 Pages	See T24 Pages
Furnace Standby Loss Control	110.2(d)	See T24 Pages	See T24 Pages	See T24 Pages
Low Leakage AHUs	110.2(f)	See T24 Pages	See T24 Pages	See T24 Pages
Ventilation[4]	120.1(b)	See T24 Pages	See T24 Pages	See T24 Pages
Demand Control Ventilation[5]	120.1(c)4	See T24 Pages	See T24 Pages	See T24 Pages
Occupant Sensor Ventilation Control[6]	120.1(c)5, 120.2(e)3	See T24 Pages	See T24 Pages	See T24 Pages
Shutoff and Reset Controls[7]	120.2(e)	See T24 Pages	See T24 Pages	See T24 Pages
Outdoor Air and Exhaust Damper Control	120.2(f)	See T24 Pages	See T24 Pages	See T24 Pages
Isolation Zones	120.2(g)	See T24 Pages	See T24 Pages	See T24 Pages
Automatic Demand Shed Controls	120.2(h)	See T24 Pages	See T24 Pages	See T24 Pages
Economizer FDD	120.2(i)	See T24 Pages	See T24 Pages	See T24 Pages
Duct Insulation	120.4	See T24 Pages	See T24 Pages	See T24 Pages
PRESCRIPTIVE MEASURES				
Equipment is sized in conformance with 140.4(a & b)	140.4(a & b)	Y Y/N	Y Y/N	Y Y/N
Supply Fan Pressure Control	140.4(c)	See T24 Pages	See T24 Pages	See T24 Pages
Simultaneous Heat/Cool[8]	140.4(d)	See T24 Pages	See T24 Pages	See T24 Pages
Economizer	140.4(e)	See T24 Pages	See T24 Pages	See T24 Pages
Heat and Cool Air Supply Reset	140.4(f)	See T24 Pages	See T24 Pages	See T24 Pages
Electric Resistance Heating[9]	140.4(g)	See T24 Pages	See T24 Pages	See T24 Pages
Duct Leakage Sealing and Testing[10]	140.4(l)	See T24 Pages	See T24 Pages	See T24 Pages

Notes:

1. Provide equipment tags (e.g. AHU 1 to 10) and system description (e.g. Single Duct VAV reheat) as appropriate. Multiple units with common requirements can be grouped together.
2. Provide references to plans (i.e. Drawing Sheet Numbers) and/or specifications (including Section name/number and relevant paragraphs) where each requirement is specified. Enter "N/A" if the requirement is not applicable to this system.
3. The referenced plans and specifications must include all of the following information: equipment tag, equipment nominal capacity, Title 24 minimum efficiency requirements, and actual rated equipment efficiencies. Where multiple efficiency requirements are applicable (e.g. full- and part-load) include all. Where appliance standards apply (110.1), identify where equipment is required to be listed per Title 20 1601 et seq.
4. Identify where the ventilation requirements are documented for each central HVAC system. Include references to both central unit schedules and sequences of operation. If one or more spaces is naturally ventilated identify where this is documented in the plans and specifications. Multiple zone central air systems must also provide a MCH-03-E compliance document.
5. If one or more spaces has demand controlled ventilation identify where it is specified including the sensor specifications and the sequence of operation.
6. If one or more space has occupant sensor ventilation control identify where it is specified including the sensor specifications and the sequence of operation
7. If the system is DDC identify the sequences for the system start/stop, optimal start, setback (if required) and setup (if required). For all systems identify the specification for the thermostats and time clocks (if applicable).
8. Identify where the heating, cooling and deadband airflows are scheduled for this system. Include a reference to the specification of the zone controls. Provide a MCH-03-E compliance document.
9. Enter N/A if there is no electric heating. If the system has electric heating indicate which exception to 140.4(g) applies.
10. If duct leakage sealing and testing is required, a MCH-04-A compliance document must be submitted.

STATE OF CALIFORNIA
HVAC DRY & WET SYSTEM REQUIREMENTS
CEC-NRCC-MCH-02-E (Revised 01/16) — CALIFORNIA ENERGY COMMISSION

CERTIFICATE OF COMPLIANCE	NRCC-MCH-02-E
HVAC Dry & Wet System Requirements	(Page 1 of 3)

Project Name: Freedom High School - Building A — Date Prepared: 7/19/2019

A. Equipment Tags and System Description[1] – Dry Systems	FC-3	FC-4	FC-5
MANDATORY MEASURES	***T-24 Sections***	***Reference to the Requirements in the Contract Documents[2]***	
Heating Equipment Efficiency[3]	110.1 or 110.2(a)	See T24 Pages	See T24 Pages	See T24 Pages
Cooling Equipment Efficiency[3]	110.1 or 110.2(a)	See T24 Pages	See T24 Pages	See T24 Pages
HVAC or Heat Pump Thermostats	110.2(b), 110.2(c)	See T24 Pages	See T24 Pages	See T24 Pages
Furnace Standby Loss Control	110.2(d)	See T24 Pages	See T24 Pages	See T24 Pages
Low Leakage AHUs	110.2(f)	See T24 Pages	See T24 Pages	See T24 Pages
Ventilation[4]	120.1(b)	See T24 Pages	See T24 Pages	See T24 Pages
Demand Control Ventilation[5]	120.1(c)4	See T24 Pages	See T24 Pages	See T24 Pages
Occupant Sensor Ventilation Control[6]	120.1(c)5, 120.2(e)3	See T24 Pages	See T24 Pages	See T24 Pages
Shutoff and Reset Controls[7]	120.2(e)	See T24 Pages	See T24 Pages	See T24 Pages
Outdoor Air and Exhaust Damper Control	120.2(f)	See T24 Pages	See T24 Pages	See T24 Pages
Isolation Zones	120.2(g)	See T24 Pages	See T24 Pages	See T24 Pages
Automatic Demand Shed Controls	120.2(h)	See T24 Pages	See T24 Pages	See T24 Pages
Economizer FDD	120.2(i)	See T24 Pages	See T24 Pages	See T24 Pages
Duct Insulation	120.4	See T24 Pages	See T24 Pages	See T24 Pages
PRESCRIPTIVE MEASURES				
Equipment is sized in conformance with 140.4(a & b)	140.4(a & b)	Y Y/N	Y Y/N	Y Y/N
Supply Fan Pressure Control	140.4(c)	See T24 Pages	See T24 Pages	See T24 Pages
Simultaneous Heat/Cool[8]	140.4(d)	See T24 Pages	See T24 Pages	See T24 Pages
Economizer	140.4(e)	See T24 Pages	See T24 Pages	See T24 Pages
Heat and Cool Air Supply Reset	140.4(f)	See T24 Pages	See T24 Pages	See T24 Pages
Electric Resistance Heating[9]	140.4(g)	See T24 Pages	See T24 Pages	See T24 Pages
Duct Leakage Sealing and Testing[10]	140.4(l)	See T24 Pages	See T24 Pages	See T24 Pages

Notes:

1. Provide equipment tags (e.g. AHU 1 to 10) and system description (e.g. Single Duct VAV reheat) as appropriate. Multiple units with common requirements can be grouped together.
2. Provide references to plans (i.e. Drawing Sheet Numbers) and/or specifications (including Section name/number and relevant paragraphs) where each requirement is specified. Enter "N/A" if the requirement is not applicable to this system.
3. The referenced plans and specifications must include all of the following information: equipment tag, equipment nominal capacity, Title 24 minimum efficiency requirements, and actual rated equipment efficiencies. Where multiple efficiency requirements are applicable (e.g. full- and part-load) include all. Where appliance standards apply (110.1), identify where equipment is required to be listed per Title 20 1601 et seq.
4. Identify where the ventilation requirements are documented for each central HVAC system. Include references to both central unit schedules and sequences of operation. If one or more spaces is naturally ventilated identify where this is documented in the plans and specifications. Multiple zone central air systems must also provide a MCH-03-E compliance document.
5. If one or more spaces has demand controlled ventilation identify where it is specified including the sensor specifications and the sequence of operation.
6. If one or more space has occupant sensor ventilation control identify where it is specified including the sensor specifications and the sequence of operation
7. If the system is DDC identify the sequences for the system start/stop, optimal start, setback (if required) and setup (if required). For all systems identify the specification for the thermostats and time clocks (if applicable).
8. Identify where the heating, cooling and deadband airflows are scheduled for this system. Include a reference to the specification of the zone controls. Provide a MCH-03-E compliance document.
9. Enter N/A if there is no electric heating. If the system has electric heating indicate which exception to 140.4(g) applies.
10. If duct leakage sealing and testing is required, a MCH-04-A compliance document must be submitted.

STATE OF CALIFORNIA
HVAC DRY & WET SYSTEM REQUIREMENTS
CEC-NRCC-MCH-02-E (Revised 01/16) — CALIFORNIA ENERGY COMMISSION

CERTIFICATE OF COMPLIANCE	NRCC-MCH-02-E
HVAC Dry & Wet System Requirements	(Page 1 of 3)

Project Name: Freedom High School - Building A — Date Prepared: 7/19/2019

A. Equipment Tags and System Description[1] – Dry Systems	FC-6	FC-7	
MANDATORY MEASURES	***T-24 Sections***	***Reference to the Requirements in the Contract Documents[2]***	
Heating Equipment Efficiency[3]	110.1 or 110.2(a)	See T24 Pages	See T24 Pages	
Cooling Equipment Efficiency[3]	110.1 or 110.2(a)	See T24 Pages	See T24 Pages	
HVAC or Heat Pump Thermostats	110.2(b), 110.2(c)	See T24 Pages	See T24 Pages	
Furnace Standby Loss Control	110.2(d)	See T24 Pages	See T24 Pages	
Low Leakage AHUs	110.2(f)	See T24 Pages	See T24 Pages	
Ventilation[4]	120.1(b)	See T24 Pages	See T24 Pages	
Demand Control Ventilation[5]	120.1(c)4	See T24 Pages	See T24 Pages	
Occupant Sensor Ventilation Control[6]	120.1(c)5, 120.2(e)3	See T24 Pages	See T24 Pages	
Shutoff and Reset Controls[7]	120.2(e)	See T24 Pages	See T24 Pages	
Outdoor Air and Exhaust Damper Control	120.2(f)	See T24 Pages	See T24 Pages	
Isolation Zones	120.2(g)	See T24 Pages	See T24 Pages	
Automatic Demand Shed Controls	120.2(h)	See T24 Pages	See T24 Pages	
Economizer FDD	120.2(i)	See T24 Pages	See T24 Pages	
Duct Insulation	120.4	See T24 Pages	See T24 Pages	
PRESCRIPTIVE MEASURES				
Equipment is sized in conformance with 140.4(a & b)	140.4(a & b)	Y Y/N	Y Y/N	Y Y/N
Supply Fan Pressure Control	140.4(c)	See T24 Pages	See T24 Pages	
Simultaneous Heat/Cool[8]	140.4(d)	See T24 Pages	See T24 Pages	
Economizer	140.4(e)	See T24 Pages	See T24 Pages	
Heat and Cool Air Supply Reset	140.4(f)	See T24 Pages	See T24 Pages	
Electric Resistance Heating[9]	140.4(g)	See T24 Pages	See T24 Pages	
Duct Leakage Sealing and Testing[10]	140.4(l)	See T24 Pages	See T24 Pages	

Notes:

1. Provide equipment tags (e.g. AHU 1 to 10) and system description (e.g. Single Duct VAV reheat) as appropriate. Multiple units with common requirements can be grouped together.
2. Provide references to plans (i.e. Drawing Sheet Numbers) and/or specifications (including Section name/number and relevant paragraphs) where each requirement is specified. Enter "N/A" if the requirement is not applicable to this system.
3. The referenced plans and specifications must include all of the following information: equipment tag, equipment nominal capacity, Title 24 minimum efficiency requirements, and actual rated equipment efficiencies. Where multiple efficiency requirements are applicable (e.g. full- and part-load) include all. Where appliance standards apply (110.1), identify where equipment is required to be listed per Title 20 1601 et seq.
4. Identify where the ventilation requirements are documented for each central HVAC system. Include references to both central unit schedules and sequences of operation. If one or more spaces is naturally ventilated identify where this is documented in the plans and specifications. Multiple zone central air systems must also provide a MCH-03-E compliance document.
5. If one or more spaces has demand controlled ventilation identify where it is specified including the sensor specifications and the sequence of operation.
6. If one or more space has occupant sensor ventilation control identify where it is specified including the sensor specifications and the sequence of operation
7. If the system is DDC identify the sequences for the system start/stop, optimal start, setback (if required) and setup (if required). For all systems identify the specification for the thermostats and time clocks (if applicable).
8. Identify where the heating, cooling and deadband airflows are scheduled for this system. Include a reference to the specification of the zone controls. Provide a MCH-03-E compliance document.
9. Enter N/A if there is no electric heating. If the system has electric heating indicate which exception to 140.4(g) applies.
10. If duct leakage sealing and testing is required, a MCH-04-A compliance document must be submitted.

STATE OF CALIFORNIA
HVAC DRY & WET SYSTEM REQUIREMENTS
CEC-NRCC-MCH-02-E (Revised 01/16) — CALIFORNIA ENERGY COMMISSION

CERTIFICATE OF COMPLIANCE	NRCC-MCH-02-E
HVAC Dry & Wet System Requirements	(Page 2 of 3)

Project Name: Freedom High School - Building A — Date Prepared: 7/19/2019

B. Equipment Tags and System Description[1] – Wet Systems					
MANDATORY MEASURES	***T-24 Sections***	***Reference to the Requirements in the Contract Documents[2]***			
Heating Hot Water Equipment Efficiency[3]	110.1				
Cooling Chilled and Condenser Water Equipment Efficiency[3]	110.1, 140.4(j)				
Open and Closed Circuit Cooling Towers conductivity or flow-based controls	110.2(e) 1				
Open and Closed Circuit Cooling Towers Maximum Achievable Cycles of Concentration (LSI)[3]	110.2(e) 2				
Open and Closed Circuit Cooling Towers Flow Meter with analog output	110.2(e) 3				
Open and Closed Circuit Cooling Towers Overflow Alarm	110.2(e) 4				
Open and Closed Circuit Cooling Towers Efficient Drift Eliminators	110.2(e) 5				
Pipe Insulation	120.3				
PRESCRIPTIVE MEASURES					
Cooling Tower Fan Controls	140.4(h)2, 140.4(h)5	Y/N	Y/N	Y/N	
Cooling Tower Flow Controls	140.4(h)3				
Centrifugal Fan Cooling Towers[4]	140.4(h)4				
Air-Cooled Chiller Limitation[5]	140.4(j)				
Variable Flow System Design	140.4(k)				
Chiller and Boiler Isolation	140.4(k)				
CHW and HHW Reset Controls	140.4(k)				
W/HP Isolation Valves	140.4(k)				
VSD on CHW, CW & W/HP Pumps >5HP	140.4(k)				
DP Sensor Location	140.4(k)				

Notes:

1. Provide equipment tags (e.g. CH 1 to 3) or system description (e.g. CHW loop) as appropriate. Multiple units with common requirements can be grouped together.
2. Provide references to plans (i.e. Drawing Sheet Numbers) and/or specifications (including Section name/number and relevant paragraphs) where each requirement is specified. Enter "N/A" if the requirement is not applicable to this system.
3. The referenced plans and specifications must include all of the following information: equipment tag, equipment nominal capacity, Title 24 minimum efficiency requirements, and actual rated equipment efficiencies. Where multiple efficiency requirements are applicable (e.g. full- and part-load) include all. For chillers operating at non-standard efficiencies provide the Kadj values. For chillers also note whether the efficiencies are Path A or Path B.
4. Identify if cooling towers have propeller fans. If towers use centrifugal fans document which exception is used.
5. If air-cooled chillers are used, document which exceptions have been used to comply with 140.4(j) and the total installed design capacity of the air-cooled chillers in the chilled water plant.
6. Identify the existence of a completed MCH-06-E when open or closed circuit cooling towers are specified to be installed, otherwise enter "N/A".

STATE OF CALIFORNIA
HVAC SYSTEM REQUIREMENTS
CEC-NRCC-MCH-02-E (Revised 06/14) — CALIFORNIA ENERGY COMMISSION

CERTIFICATE OF COMPLIANCE	NRCC-MCH-02-E
HVAC Wet System Requirements	(Page 3 of 3)

Project Name: Freedom High School - Building A — Date Prepared: 7/19/2019

DOCUMENTATION AUTHOR'S DECLARATION STATEMENT

1. I certify that this Certificate of Compliance documentation is accurate and complete.

Documentation Author Name:	Matt Hargadon	Documentation Author Signature:	Matt Hargadon
Company:	Guttmann & Blaevoet Consulting Engineers	Signature Date:	7/19/2019
Address:	2351 Powell St.	CEA/ HERS Certification Identification (if applicable):	
City/State/Zip:	San Francisco/CA/94133	Phone:	4156554000

RESPONSIBLE PERSON'S DECLARATION STATEMENT

I certify the following under penalty of perjury, under the laws of the State of California:

1. The information provided on this Certificate of Compliance is true and correct.
2. I am eligible under Division 3 of the Business and Professions Code to accept responsibility for the building design or system design identified on this Certificate of Compliance (responsible designer).
3. The energy features and performance specifications, materials, components, and manufactured devices for the building design or system design identified on this Certificate of Compliance conform to the requirements of Title 24, Part 1 and Part 6 of the California Code of Regulations.
4. The building design features or system design features identified on this Certificate of Compliance are consistent with the information provided on other applicable compliance documents, worksheets, calculations, plans and specifications submitted to the enforcement agency for approval with this building permit application.
5. I will ensure that a completed signed copy of this Certificate of Compliance shall be made available with the building permit(s) issued for the building, and made available to the enforcement agency for all applicable inspections. I understand that a completed signed copy of this Certificate of Compliance is required to be included with the documentation the builder provides to the building owner at occupancy.

Responsible Designer Name:	Chris Del Core	Responsible Designer Signature:	
Company :	Costa Engineers inc.	Date Signed:	8-1-19
Address:	3274 Villa Lane	License:	M31600
City/State/Zip:	Napa, CA 94558	Phone:	(707) 252-9177

QUATTROCCHI KWOK ARCHITECTS
Main Office:
636 Fifth Street, Santa Rosa, CA 95404
Pleasanton Office:
600 Main Street, Suite E,
Pleasanton, CA 94566
(707) 576-0829

LICENSED ARCHITECT — JIM THEISS — LICENSE # C22643 — EXP JUNE 30, 2021 — STATE OF CALIFORNIA

SIGNED: AUGUST 13, 2019

FREEDOM HIGH SCHOOL

PERFORMING ARTS AND CTE FACILITIES

1050 NEROLY RD,
OAKLEY, CA 94561

LIBERTY UNION HIGH SCHOOL DISTRICT

ARCH PROJECT NO: 1739.00
DRAWN BY:
DRAWING SCALE:
PTN: 61721-0068

BID SET

AUGUST 13, 2019

SHEET TITLE

TITLE 24 BLDG A

SHEET NUMBER

T-4

BIM Server: BIMCLOUD-QKA - BIMcloud/1739.00 - Freedom High School/1739.00 FREEDOM HS Performing Arts Center.B/6/2019.5:15 PM

STATE OF CALIFORNIA
MECHANICAL VENTILATION AND REHEAT
CEC-NRCC-MCH-03-E (Revised 05/16) — CALIFORNIA ENERGY COMMISSION

CERTIFICATE OF COMPLIANCE	NRCC-MCH-03-E
Mechanical Ventilation & Reheat	(Page 1 of 2)
Project Name: Freedom High School - Building A	Date Prepared: 7/19/2019

A. Mechanical Ventilation and Reheat

ACTUAL DESIGN INFO (FROM EQUIPMENT SCHEDULES, ETC)						AREA BASIS			OCCUPANCY BASIS			ROOM BASIS	MINIMUM		VAV Reheated Primary Air CFM			VAV Deadband Primary Air CFM		
01	02	03	04	05	06	07	08	09	10	11	12	13	14	15	16	17	18	19	20	21
ZONE / SYSTEM / VAV BOX TAG	DESIGN PRIMARY COOLING AIRFLOW (CFM)	DESIGN PRIMARY DEADBAND AIRFLOW (CFM)	DESIGN PRIMARY HEATING AIRFLOW (CFM)	CNTRL TYPE OSC (Y/N)	TRANSFER AIRFLOW (CFM)	CONDITIONED AREA (FT²)	MIN CFM PER AREA	MIN CFM BY AREA	NUM. OF PEOPLE	CFM PER PERSON	MIN CFM BY OCCUPANT	MIN CFM BY ROOM	REQ'D VENT AIRFLOW (CFM)	COMPLIES?	PERCENTAGE BASED DESIGN PRIMARY COOLING AIR (CFM)	MAXIMUM REHEAT (CFM)	COMPLIES?	% BASED DESIGN PRIMY COOL (CFM)	MAX DEAD-BAND AIRFLOW (CFM)	COMPLIES?
Auditorium						3,907	1.07	4,186	279.1	15.0	4,181		4,186	☒ Pass ☐ Fail			☐ Pass ☐ Fail ☒ N/A			☐ Pass ☐ Fail ☒ N/A
Tech Ledge1						1,500	0.15	225	7.5	30.0	225		225	☒ Pass ☐ Fail			☐ Pass ☐ Fail ☒ N/A			☐ Pass ☐ Fail ☒ N/A
Tech Ledge2						204	0.15	31	1.0	30.0	31		31	☒ Pass ☐ Fail			☐ Pass ☐ Fail ☒ N/A			☐ Pass ☐ Fail ☒ N/A
											Total		4,442	☐ Pass ☐ Fail			☐ Pass ☐ Fail ☐ N/A			☐ Pass ☐ Fail ☐ N/A
Stage						2,270	1.07	2,432	162.1	15.0	2,429		2,432	☒ Pass ☐ Fail			☐ Pass ☐ Fail ☒ N/A			☐ Pass ☐ Fail ☒ N/A
Corridor						365	0.15	55	1.8	30.0	55		55	☒ Pass ☐ Fail			☐ Pass ☐ Fail ☒ N/A			☐ Pass ☐ Fail ☒ N/A
											Total		2,487	☐ Pass ☐ Fail			☐ Pass ☐ Fail ☐ N/A			☐ Pass ☐ Fail ☐ N/A

STATE OF CALIFORNIA
MECHANICAL VENTILATION AND REHEAT
CEC-NRCC-MCH-03-E (Revised 05/16) — CALIFORNIA ENERGY COMMISSION
CERTIFICATE OF COMPLIANCE — NRCC-MCH-03-E
Mechanical Ventilation & Reheat — (Page 1 of 2)
Project Name: Freedom High School - Building A — Date Prepared: 7/19/2019
A. Mechanical Ventilation and Reheat

ACTUAL DESIGN INFO (FROM EQUIPMENT SCHEDULES, ETC)						AREA BASIS			OCCUPANCY BASIS			ROOM BASIS	MINIMUM		VAV Reheated Primary Air CFM			VAV Deadband Primary Air CFM		
01	02	03	04	05	06	07	08	09	10	11	12	13	14	15	16	17	18	19	20	21
ZONE / SYSTEM / VAV BOX TAG	DESIGN PRIMARY COOLING AIRFLOW (CFM)	DESIGN PRIMARY DEADBAND AIRFLOW (CFM)	DESIGN PRIMARY HEATING AIRFLOW (CFM)	CNTRL TYPE OSC (Y/N)	TRANSFER AIRFLOW (CFM)	CONDITIONED AREA (FT²)	MIN CFM PER AREA	MIN CFM BY AREA	NUM. OF PEOPLE	CFM PER PERSON	MIN CFM BY OCCUPANT	MIN CFM BY ROOM	REQ'D VENT AIRFLOW (CFM)	COMPLIES?	PERCENTAGE BASED DESIGN PRIMARY COOLING AIR (CFM)	MAXIMUM REHEAT (CFM)	COMPLIES?	% BASED DESIGN PRIMY COOL (CFM)	MAX DEAD-BAND AIRFLOW (CFM)	COMPLIES?
Corridor/Suppor						3,237	0.15	485	16.2	30.0	485		485	☒ Pass ☐ Fail			☐ Pass ☐ Fail ☒ N/A			☐ Pass ☐ Fail ☒ N/A
Elect.						118	0.15	18	0.6	30.0	18		18	☒ Pass ☐ Fail			☐ Pass ☐ Fail ☒ N/A			☐ Pass ☐ Fail ☒ N/A
											Total		503	☐ Pass ☐ Fail			☐ Pass ☐ Fail ☐ N/A			☐ Pass ☐ Fail ☐ N/A
Practice Classrc						1,644	0.38	617	41.1	15.2	625		625	☒ Pass ☐ Fail			☐ Pass ☐ Fail ☒ N/A			☐ Pass ☐ Fail ☒ N/A
Support						191	0.15	29	1.0	30.0	29		29	☒ Pass ☐ Fail			☐ Pass ☐ Fail ☒ N/A			☐ Pass ☐ Fail ☒ N/A
											Total		654	☐ Pass ☐ Fail			☐ Pass ☐ Fail ☐ N/A			☐ Pass ☐ Fail ☐ N/A
Theatre Arts						1,338	0.38	502	33.4	15.2	508		508	☒ Pass ☐ Fail			☐ Pass ☐ Fail ☒ N/A			☐ Pass ☐ Fail ☒ N/A

CA Building Energy Efficiency Standards - 2016 Nonresidential Compliance — May 2016

STATE OF CALIFORNIA
MECHANICAL VENTILATION AND REHEAT
CEC-NRCC-MCH-03-E (Revised 05/16) — CALIFORNIA ENERGY COMMISSION
CERTIFICATE OF COMPLIANCE — NRCC-MCH-03-E
Mechanical Ventilation & Reheat — (Page 1 of 2)
Project Name: Freedom High School - Building A — Date Prepared: 7/19/2019
A. Mechanical Ventilation and Reheat

ACTUAL DESIGN INFO (FROM EQUIPMENT SCHEDULES, ETC)						AREA BASIS			OCCUPANCY BASIS			ROOM BASIS	MINIMUM		VAV Reheated Primary Air CFM			VAV Deadband Primary Air CFM		
01	02	03	04	05	06	07	08	09	10	11	12	13	14	15	16	17	18	19	20	21
ZONE / SYSTEM / VAV BOX TAG	DESIGN PRIMARY COOLING AIRFLOW (CFM)	DESIGN PRIMARY DEADBAND AIRFLOW (CFM)	DESIGN PRIMARY HEATING AIRFLOW (CFM)	CNTRL TYPE OSC (Y/N)	TRANSFER AIRFLOW (CFM)	CONDITIONED AREA (FT²)	MIN CFM PER AREA	MIN CFM BY AREA	NUM. OF PEOPLE	CFM PER PERSON	MIN CFM BY OCCUPANT	MIN CFM BY ROOM	REQ'D VENT AIRFLOW (CFM)	COMPLIES?	PERCENTAGE BASED DESIGN PRIMARY COOLING AIR (CFM)	MAXIMUM REHEAT (CFM)	COMPLIES?	% BASED DESIGN PRIMY COOL (CFM)	MAX DEAD-BAND AIRFLOW (CFM)	COMPLIES?
Storage						127	0.15	19	0.1	150.0	19		19	☒ Pass ☐ Fail			☐ Pass ☐ Fail ☒ N/A			☐ Pass ☐ Fail ☒ N/A
Enclosed Office						170	0.15	25	0.8	30.0	25		25	☒ Pass ☐ Fail			☐ Pass ☐ Fail ☒ N/A			☐ Pass ☐ Fail ☒ N/A
											Total		553	☐ Pass ☐ Fail			☐ Pass ☐ Fail ☐ N/A			☐ Pass ☐ Fail ☐ N/A
Locker/Dressing						979	0.15	147	9.8	15.0	147		147	☒ Pass ☐ Fail			☐ Pass ☐ Fail ☒ N/A			☐ Pass ☐ Fail ☒ N/A
											Total		147	☐ Pass ☐ Fail			☐ Pass ☐ Fail ☐ N/A			☐ Pass ☐ Fail ☐ N/A
Set Prep						1,208	0.15	181	6.0	30.0	181		181	☒ Pass ☐ Fail			☐ Pass ☐ Fail ☒ N/A			☐ Pass ☐ Fail ☒ N/A
											Total		181	☐ Pass ☐ Fail			☐ Pass ☐ Fail ☐ N/A			☐ Pass ☐ Fail ☐ N/A

CA Building Energy Efficiency Standards - 2016 Nonresidential Compliance — May 2016

STATE OF CALIFORNIA
MECHANICAL VENTILATION AND REHEAT
CEC-NRCC-MCH-03-E (Revised 05/16) — CALIFORNIA ENERGY COMMISSION
CERTIFICATE OF COMPLIANCE — NRCC-MCH-03-E
Mechanical Ventilation & Reheat — (Page 1 of 2)
Project Name: Freedom High School - Building A — Date Prepared: 7/19/2019
A. Mechanical Ventilation and Reheat

ACTUAL DESIGN INFO (FROM EQUIPMENT SCHEDULES, ETC)						AREA BASIS			OCCUPANCY BASIS			ROOM BASIS	MINIMUM		VAV Reheated Primary Air CFM			VAV Deadband Primary Air CFM		
01	02	03	04	05	06	07	08	09	10	11	12	13	14	15	16	17	18	19	20	21
ZONE / SYSTEM / VAV BOX TAG	DESIGN PRIMARY COOLING AIRFLOW (CFM)	DESIGN PRIMARY DEADBAND AIRFLOW (CFM)	DESIGN PRIMARY HEATING AIRFLOW (CFM)	CNTRL TYPE OSC (Y/N)	TRANSFER AIRFLOW (CFM)	CONDITIONED AREA (FT²)	MIN CFM PER AREA	MIN CFM BY AREA	NUM. OF PEOPLE	CFM PER PERSON	MIN CFM BY OCCUPANT	MIN CFM BY ROOM	REQ'D VENT AIRFLOW (CFM)	COMPLIES?	PERCENTAGE BASED DESIGN PRIMARY COOLING AIR (CFM)	MAXIMUM REHEAT (CFM)	COMPLIES?	% BASED DESIGN PRIMY COOL (CFM)	MAX DEAD-BAND AIRFLOW (CFM)	COMPLIES?
Lobby						1,214	0.50	607	40.5	15.0	607		607	☒ Pass ☐ Fail			☐ Pass ☐ Fail ☒ N/A			☐ Pass ☐ Fail ☒ N/A
Corridor / Restrc						835	0.15	125	4.2	30.0	125		125	☒ Pass ☐ Fail			☐ Pass ☐ Fail ☒ N/A			☐ Pass ☐ Fail ☒ N/A
											Total		732	☐ Pass ☐ Fail			☐ Pass ☐ Fail ☐ N/A			☐ Pass ☐ Fail ☐ N/A
Control Booth						331	0.15	50	1.7	30.0	50		50	☒ Pass ☐ Fail			☐ Pass ☐ Fail ☒ N/A			☐ Pass ☐ Fail ☒ N/A
											Total		50	☐ Pass ☐ Fail			☐ Pass ☐ Fail ☐ N/A			☐ Pass ☐ Fail ☐ N/A
Amp Room/Aud						708	0.15	106	3.5	30.0	106		106	☒ Pass ☐ Fail			☐ Pass ☐ Fail ☒ N/A			☐ Pass ☐ Fail ☒ N/A
											Total		106	☐ Pass ☐ Fail			☐ Pass ☐ Fail ☐ N/A			☐ Pass ☐ Fail ☐ N/A

CA Building Energy Efficiency Standards - 2016 Nonresidential Compliance — May 2016

STATE OF CALIFORNIA
MECHANICAL VENTILATION AND REHEAT
CEC-NRCC-MCH-03-E (Revised 05/16) — CALIFORNIA ENERGY COMMISSION
CERTIFICATE OF COMPLIANCE — NRCC-MCH-03-E
Mechanical Ventilation & Reheat — (Page 1 of 2)
Project Name: Freedom High School - Building A — Date Prepared: 7/19/2019
A. Mechanical Ventilation and Reheat

ACTUAL DESIGN INFO (FROM EQUIPMENT SCHEDULES, ETC)						AREA BASIS			OCCUPANCY BASIS			ROOM BASIS	MINIMUM		VAV Reheated Primary Air CFM			VAV Deadband Primary Air CFM		
01	02	03	04	05	06	07	08	09	10	11	12	13	14	15	16	17	18	19	20	21
ZONE / SYSTEM / VAV BOX TAG	DESIGN PRIMARY COOLING AIRFLOW (CFM)	DESIGN PRIMARY DEADBAND AIRFLOW (CFM)	DESIGN PRIMARY HEATING AIRFLOW (CFM)	CNTRL TYPE OSC (Y/N)	TRANSFER AIRFLOW (CFM)	CONDITIONED AREA (FT²)	MIN CFM PER AREA	MIN CFM BY AREA	NUM. OF PEOPLE	CFM PER PERSON	MIN CFM BY OCCUPANT	MIN CFM BY ROOM	REQ'D VENT AIRFLOW (CFM)	COMPLIES?	PERCENTAGE BASED DESIGN PRIMARY COOLING AIR (CFM)	MAXIMUM REHEAT (CFM)	COMPLIES?	% BASED DESIGN PRIMY COOL (CFM)	MAX DEAD-BAND AIRFLOW (CFM)	COMPLIES?
Elec. Mech.						479	0.15	72	0.7	99.9	72		72	☒ Pass ☐ Fail			☐ Pass ☐ Fail ☒ N/A			☐ Pass ☐ Fail ☒ N/A
											Total		72	☐ Pass ☐ Fail			☐ Pass ☐ Fail ☐ N/A			☐ Pass ☐ Fail ☐ N/A
Elec. Mech.						200	0.15	30	0.3	99.9	30		30	☒ Pass ☐ Fail			☐ Pass ☐ Fail ☒ N/A			☐ Pass ☐ Fail ☒ N/A
											Total		30	☐ Pass ☐ Fail			☐ Pass ☐ Fail ☐ N/A			☐ Pass ☐ Fail ☐ N/A
Tickets						242	0.15	36	1.2	30.0	36		36	☒ Pass ☐ Fail			☐ Pass ☐ Fail ☒ N/A			☐ Pass ☐ Fail ☒ N/A
Corridor/Suppor						341	0.15	51	1.7	30.0	51		51	☒ Pass ☐ Fail			☐ Pass ☐ Fail ☒ N/A			☐ Pass ☐ Fail ☒ N/A
											Total		87	☐ Pass ☐ Fail			☐ Pass ☐ Fail ☐ N/A			☐ Pass ☐ Fail ☐ N/A

CA Building Energy Efficiency Standards - 2016 Nonresidential Compliance — May 2016

STATE OF CALIFORNIA
MECHANICAL VENTILATION AND REHEAT
CEC-NRCC-MCH-03-E (Revised 05/16) — CALIFORNIA ENERGY COMMISSION
CERTIFICATE OF COMPLIANCE — NRCC-MCH-03-E
Mechanical Ventilation & Reheat — (Page 1 of 2)
Project Name: Freedom High School - Building A — Date Prepared: 7/19/2019
A. Mechanical Ventilation and Reheat

ACTUAL DESIGN INFO (FROM EQUIPMENT SCHEDULES, ETC)						AREA BASIS			OCCUPANCY BASIS			ROOM BASIS	MINIMUM		VAV Reheated Primary Air CFM			VAV Deadband Primary Air CFM		
01	02	03	04	05	06	07	08	09	10	11	12	13	14	15	16	17	18	19	20	21
ZONE / SYSTEM / VAV BOX TAG	DESIGN PRIMARY COOLING AIRFLOW (CFM)	DESIGN PRIMARY DEADBAND AIRFLOW (CFM)	DESIGN PRIMARY HEATING AIRFLOW (CFM)	CNTRL TYPE OSC (Y/N)	TRANSFER AIRFLOW (CFM)	CONDITIONED AREA (FT²)	MIN CFM PER AREA	MIN CFM BY AREA	NUM. OF PEOPLE	CFM PER PERSON	MIN CFM BY OCCUPANT	MIN CFM BY ROOM	REQ'D VENT AIRFLOW (CFM)	COMPLIES?	PERCENTAGE BASED DESIGN PRIMARY COOLING AIR (CFM)	MAXIMUM REHEAT (CFM)	COMPLIES?	% BASED DESIGN PRIMY COOL (CFM)	MAX DEAD-BAND AIRFLOW (CFM)	COMPLIES?
Dimmer Room						294	0.15	44	0.4	99.9	44		44	☒ Pass ☐ Fail			☐ Pass ☐ Fail ☒ N/A			☐ Pass ☐ Fail ☒ N/A
											Total		44	☐ Pass ☐ Fail			☐ Pass ☐ Fail ☐ N/A			☐ Pass ☐ Fail ☐ N/A
														☐ Pass ☐ Fail			☐ Pass ☐ Fail ☐ N/A			☐ Pass ☐ Fail ☐ N/A
														☐ Pass ☐ Fail			☐ Pass ☐ Fail ☐ N/A			☐ Pass ☐ Fail ☐ N/A
														☐ Pass ☐ Fail			☐ Pass ☐ Fail ☐ N/A			☐ Pass ☐ Fail ☐ N/A
														☐ Pass ☐ Fail			☐ Pass ☐ Fail ☐ N/A			☐ Pass ☐ Fail ☐ N/A

CA Building Energy Efficiency Standards - 2016 Nonresidential Compliance — May 2016

STATE OF CALIFORNIA
MECHANICAL VENTILATION AND REHEAT
CEC-NRCC-MCH-03-E (Revised 05/16) — CALIFORNIA ENERGY COMMISSION

CERTIFICATE OF COMPLIANCE	NRCC-MCH-03-E
Mechanical Ventilation & Reheat	(Page 2 of 2)
Project Name: Freedom High School - Building A	Date Prepared: 7/19/2019

DOCUMENTATION AUTHOR'S DECLARATION STATEMENT

1. I certify that this Certificate of Compliance documentation is accurate and complete.

Documentation Author Name:	Matt Hargadon	Documentation Author Signature:	Matt Hargadon
Company:	Guttmann & Blaevoet Consulting Engineers	Signature Date:	7/19/2019
Address:	2351 Powell St.	CEA/ HERS Certification Identification (if applicable):	
City/State/Zip:	San Francisco/CA/94133	Phone:	4156554000

RESPONSIBLE PERSON'S DECLARATION STATEMENT

I certify the following under penalty of perjury, under the laws of the State of California:
1. The information provided on this Certificate of Compliance is true and correct.
2. I am eligible under Division 3 of the Business and Professions Code to accept responsibility for the building design or system design identified on this Certificate of Compliance (responsible designer).
3. The energy features and performance specifications, materials, components, and manufactured devices for the building design or system design identified on this Certificate of Compliance conform to the requirements of Title 24, Part 1 and Part 6 of the California Code of Regulations.
4. The building design features or system design features identified on this Certificate of Compliance are consistent with the information provided on other applicable compliance documents, worksheets, calculations, plans and specifications submitted to the enforcement agency for approval with this building permit application.
5. I will ensure that a completed signed copy of this Certificate of Compliance shall be made available with the building permit(s) issued for the building, and made available to the enforcement agency for all applicable inspections. I understand that a completed signed copy of this Certificate of Compliance is required to be included with the documentation the builder provides to the building owner at occupancy.

Responsible Designer Name:	Chris Del Core	Responsible Designer Signature:	
Company:	Costa Engineers inc.	Date Signed:	8-1-19
Address:	3274 Villa Lane	License:	M31600
City/State/Zip:	Napa, CA 94558	Phone:	(707) 252-9177

STATE OF CALIFORNIA
REQUIRED ACCEPTANCE TESTS
CEC-NRCC-MCH-04-E (Revised 01/16) — CALIFORNIA ENERGY COMMISSION

CERTIFICATE OF COMPLIANCE	NRCC-MCH-04-E
Required Acceptance Tests	(Page 1 of 3)
Project Name: Freedom High School - Building A	Date Prepared: 7/19/2019

A. MECHANICAL COMPLIANCE FORMS & WORKSHEETS
(indicate if worksheet is included)

For detailed instructions on the use of this and all Energy Standards compliance documents, refer to the 2016 Nonresidential Manual
Note: The Enforcement Agency may require all compliance documents to be incorporated onto the building plans. The NRCC-MCH-04-E and NRCC-MECH-05-E are alternative compliance documents to NRCC-MCH-01-E, NRCC-MCH-02-E and NRCC-MCH-03-E for projects using only single zone packaged HVAC systems.

YES	NO	Form	Title
✔		NRCC-MCH-04-E (1 of 2)	Certificate of Compliance. Required on plans when used.
✔		NRCC-MCH-04-E (2 of 2)	Mechanical Acceptance Tests. Required on plans when used.
✔		NRCC-MCH-05-E (1 of 2)	HVAC Prescriptive Requirements. It is required on plans when used.
✔		NRCC-MCH-05-E (2 of 2)	Mechanical SWH Equipment Summary is required for all submittals with service water heating, pools or spas. It is required on plans where applicable.

STATE OF CALIFORNIA
REQUIRED ACCEPTANCE TESTS
CEC-NRCC-MCH-04-E (Revised 01/16) — CALIFORNIA ENERGY COMMISSION

CERTIFICATE OF COMPLIANCE	NRCC-MCH-04-E
Required Acceptance Tests	(Page 2 of 3)
Project Name: Freedom High School - Building A	Date Prepared: 7/19/2019

Designer:
This compliance document is to be used by the designer and attached to the plans. Listed below are all the acceptance tests for mechanical systems. The designer is required to check the applicable boxes by all acceptance tests that apply and list all equipment that require an acceptance test. If all equipment of a certain type requires a test, list the equipment description and the number of systems. The NA number designates the Section in the Appendix of the Nonresidential Reference Appendices Manual that describes the test. Since this compliance document will be part of the plans, completion of this section will allow the responsible party to budget for the scope of work appropriately.

Enforcement Agency:
Systems Acceptance. Before occupancy permit is granted for a newly constructed building or space, or a new space-conditioning system serving a building or space is operated for normal use, all control devices serving the building or space shall be certified as meeting the Acceptance Requirements for Code Compliance.

Systems Acceptance. Before occupancy permit is granted. All newly installed HVAC equipment must be tested using the Acceptance Requirements.
The NRCC-MCH-04-E compliance document is not considered a completed document and is not to be accepted by the building department unless the correct boxes are checked. The equipment requiring testing, person performing the test (Example: HVAC installer, TAB contractor, controls contractor, PE in charge of project) and what Acceptance test must be conducted. The following checked-off forms are required for ALL newly installed and replaced equipment. In addition a Certificate of Acceptance documents shall be submitted to the building department that certifies plans, specifications, installation certificates, and operating and maintenance information meet the requirements of Section 10-103(b) and Title 24 Part 6. The building inspector must receive the properly filled out and signed compliance documents before the building can receive final occupancy.

Test Description		MCH-02-A	MCH-03-A	MCH-04-A	MCH-05-A	MCH-06-A	MCH-07-A	MCH-11-A	MCH-12-A	MCH-14-A	MCH-18-A	Test Performed By:
Equipment Requiring Testing or Verification	# of Units	Outdoor Air	Single Zone Unitary	Air Distribution Ducts	Economizer Controls	Demand Control Ventilation (DCV)	Supply Fan VAV	Automatic Demand Shed Control	FDD for Packaged DX Units	Distributed Energy Storage DX AC Systems	Energy Management Control System	
AC-1/AC-2 ⊄	2	✔	✔		✔	✔			✔			
AC-3 48LCE	1	✔	✔		✔	✔			✔			
AC-4 48LCE	1	✔	✔		✔				✔			
AC-5 48LCE	1	✔	✔		✔				✔			
AC-6 48LCE	1	✔	✔		✔							
AC-7 48LCE	1	✔	✔		✔							
AC-8 48LCE	1	✔	✔		✔							
AC-9 48LCE	1	✔	✔		✔	✔			✔			
FC-1	1	✔	✔									

QUATTROCCHI KWOK ARCHITECTS
Main Office:
636 Fifth Street, Santa Rosa, CA 95404
Pleasanton Office:
600 Main Street, Suite E,
Pleasanton, CA 94566
(707) 576-0829

LICENSED ARCHITECT
JIM THEISS
LICENSE # C22643
EXP. JUNE 30, 2021
STATE OF CALIFORNIA

SIGNED: AUGUST 13, 2019

FREEDOM HIGH SCHOOL

PERFORMING ARTS AND CTE FACILITIES

1050 NEROLY RD,
OAKLEY, CA 94561

LIBERTY UNION HIGH SCHOOL DISTRICT

ARCH PROJECT NO: 1739.00
DRAWN BY:
DRAWING SCALE:
PTN: 61721-0068

BID SET

AUGUST 13, 2019

SHEET TITLE

TITLE 24 BLDG A

SHEET NUMBER

T-5

BIM Server: BIMCLOUD-QKA - BIMcloud/1739.00 - Freedom High School/1739.00 FREEDOM HS Performing Arts Center.pln 8/6/2019 5:15 PM

STATE OF CALIFORNIA
REQUIRED ACCEPTANCE TESTS
CEC-NRCC-MCH-04-E (Revised 01/16) — CALIFORNIA ENERGY COMMISSION

CERTIFICATE OF COMPLIANCE	NRCC-MCH-04-E
Required Acceptance Tests	(Page 2 of 3)

Project Name: Freedom High School - Building A — Date Prepared: 7/19/2019

Designer:
This compliance document is to be used by the designer and attached to the plans. Listed below are all the acceptance tests for mechanical systems. The designer is required to check the applicable boxes by all acceptance tests that apply and list all equipment that require an acceptance test. If all equipment of a certain type requires a test, list the equipment description and the number of systems. The NA number designates the Section in the Appendix of the Nonresidential Reference Appendices Manual that describes the test. Since this compliance document will be part of the plans, completion of this section will allow the responsible party to budget for the scope of work appropriately.

Enforcement Agency:
Systems Acceptance. Before occupancy permit is granted for a newly constructed building or space, or a new space-conditioning system serving a building or space is operated for normal use, all control devices serving the building or space shall be certified as meeting the Acceptance Requirements for Code Compliance.

Systems Acceptance. Before occupancy permit is granted. All newly installed HVAC equipment must be tested using the Acceptance Requirements.
The NRCC-MCH-04-E compliance document is not considered a completed document and is not to be accepted by the building department unless the correct boxes are checked. The equipment requiring testing, person performing the test (Example: HVAC installer, TAB contractor, controls contractor, PE in charge of project) and what Acceptance test must be conducted. The following checked-off forms are required for ALL newly installed and replaced equipment. In addition a Certificate of Acceptance documents shall be submitted to the building department that certifies plans, specifications, installation certificates, and operating and maintenance information meet the requirements of Section 10-103(b) and Title 24 Part 6. The building inspector must receive the properly filled out and signed compliance documents before the building can receive final occupancy.

Test Description		MCH-02-A	MCH-03-A	MCH-04-A	MCH-05-A	MCH-06-A	MCH-07-A	MCH-11-A	MCH-12-A	MCH-14-A	MCH-18-A	Test Performed By:
Equipment Requiring Testing or Verification	# of Units	Outdoor Air	Single Zone Unitary	Air Distribution Ducts	Economizer Controls	Demand Control Ventilation (DCV)	Supply Fan VAV	Automatic Demand Shed Control	FDD for Packaged DX Units	Distributed Energy Storage DX AC Systems	Energy Management Control System	
FC-3	1	✔	✔									
FC-4	1	✔	✔									
FC-5	1	✔	✔									
FC-6	1	✔	✔									
FC-7	1	✔	✔									

STATE OF CALIFORNIA
REQUIRED ACCEPTANCE TESTS
CEC-NRCC-MCH-04-E (Revised 01/16) — CALIFORNIA ENERGY COMMISSION

CERTIFICATE OF COMPLIANCE	NRCC-MCH-04-E
Required Acceptance Tests	(Page 3 of 3)

Project Name: Freedom High School - Building A — Date Prepared: 7/19/2019

DOCUMENTATION AUTHOR'S DECLARATION STATEMENT
1. I certify that this Certificate of Compliance documentation is accurate and complete.

Documentation Author Name:	Matt Hargadon	Documentation Author Signature:	Matt Hargadon
Company:	Guttmann & Blaevoet Consulting Engineers	Signature Date:	7/19/2019
Address:	2351 Powell St.	CEA/ HERS Certification Identification (if applicable):	
City/State/Zip:	San Francisco/CA/94133	Phone:	4156554000

RESPONSIBLE PERSON'S DECLARATION STATEMENT
I certify the following under penalty of perjury, under the laws of the State of California:
1. The information provided on this Certificate of Compliance is true and correct.
2. I am eligible under Division 3 of the Business and Professions Code to accept responsibility for the building design or system design identified on this Certificate of Compliance (responsible designer).
3. The energy features and performance specifications, materials, components, and manufactured devices for the building design or system design identified on this Certificate of Compliance conform to the requirements of Title 24, Part 1 and Part 6 of the California Code of Regulations.
4. The building design features or system design features identified on this Certificate of Compliance are consistent with the information provided on other applicable compliance documents, worksheets, calculations, plans and specifications submitted to the enforcement agency for approval with this building permit application.
5. I will ensure that a completed signed copy of this Certificate of Compliance shall be made available with the building permit(s) issued for the building, and made available to the enforcement agency for all applicable inspections. I understand that a completed signed copy of this Certificate of Compliance is required to be included with the documentation the builder provides to the building owner at occupancy.

Responsible Designer Name:	Chris Del Core	Responsible Designer Signature:	
Company:	Costa Engineers inc.	Date Signed:	8-1-19
Address:	3274 Villa Lane	License:	M31600
City/State/Zip:	Napa, CA 94558	Phone:	(707) 252-9177

STATE OF CALIFORNIA
REQUIREMENTS FOR PACKAGED SINGLE ZONE UNITS
CEC-NRCC-MCH-05-E (Revised 01/16) — CALIFORNIA ENERGY COMMISSION

CERTIFICATE OF COMPLIANCE	NRCC-MCH-05-E
Requirements for Packaged Single-Zone Units	(Page 1 of 2)

Project Name: Freedom High School - Building A — Date Prepared: 7/19/2019

Equipment Tag(s)[1]		AC-1/AC-2		AC-3		AC-4	
MANDATORY MEASURES	*T-24 Sections*	*Requirement*[2]	*As Scheduled*[3]	*Requirement*[2]	*As Scheduled*[3]	*Requirement*[2]	*As Scheduled*[3]
Heating Equipment Efficiency[4]	110.1 or 110.2(a)	78% AFUE	81% AFUE	78% TE	81% TE	78% AFUE	81% AFUE
Cooling Equipment Efficiency[4]	110.1 or 110.2(a)	10.8 EER	12.4 EER	10.8 EER	12.5 EER	13 SEER	16.2 SEER / 12.5
Thermostats[5]	110.2(b), 110.2(c)	Setback	Setback	Setback	Setback	Setback	Setback
Furnace Standby Loss Control[6]	110.2(d)	n/a		Req	IID	n/a	
Low Leakage AHU	110.2(f)	NR	none	NR	none	NR	none
Ventilation[7]	120.1(b)	4,442	4,436	2,487	2,483	503	503
Demand Control Ventilation[8]	120.1(c)4	Req	Yes	Req	Yes	NR	No
Occupant Sensor Ventilation Control[9]	120.1(c)5, 120.2(e)3						
Shutoff and Reset Controls[5]	120.2(e)	Req	Programmable	Req	Programmable	Req	Programmable S
Outdoor Air and Exhaust Damper Control	120.2(f)	Req	Auto	Req	Auto	Req	Auto
Automatic Demand Shed Controls	120.2(h)	NR	none	NR	none	NR	none
Economizer FDD	120.2(i)	Req	Yes	NR	No	NR	No
Duct Insulation	120.4	R-8	R-8.0	R-8	R-8.0	R-8	R-8.0
PRESCRIPTIVE MEASURES							
Equipment is sized in conformance with 140.4 (a & b)	140.4(a & b)	78,414 Btu/h 548,533 Btu/h	352,000 Btu/hr 286,591 Btu/hr	297,165 Btu/h 278,822 Btu/h	220,000 Btu/hr 176,102 Btu/hr	176,965 Btu/h 156,298 Btu/h	72,000 Btu/hr 56,506 Btu/hr
Economizer	140.4(e)	Req	Diff. Temp (Inte	Req	Diff. Temp (Inte	Req	Diff. Temp (Integ
Electric Resistance Heating[10]	140.4(g)	No	No	NR	No	No	No
Duct Leakage Sealing and Testing.[11]	140.4(l)	NR	No	NR	No	NR	No

Notes:
1. *Provide equipment tags (e.g. AC1 or AC1 to 10). Multiple units of the same make and model with the same application and accessories can be grouped together.*
2. *Enter the following information as appropriate: Unit Manufacturer; Unit Model Number (including all accessories); Description of the unit (e.g. gas-pack or heat pump; rated heating capacity (enter "N/A" if no heating); and, rated cooling capacity (enter "N/A" if no cooling). For unit capacities include the units (e.g. kBtuh or tons).*
3. *For each requirement, enter the minimum requirement from the Standard In the left column (under "Standard Requirement"). In the right column (under "As Scheduled") enter the value for the units as specified.*
4. *Where there is more than one requirement (e.g. full and part load efficiency) enter both with the appropriate labels (e.g. COP and IEER).*
5. *In the left column identify the thermostatic requirements from the standard (e.g. programmable setback thermostat or heat pump with electric heat), . In the right column indicate the capabilities of the thermostat as scheduled.*
6. *If the unit has a furnace which is rated at ≥225,000 Btuh of capacity, indicate the rated standby loss and ignition source (e.g. IID). If there is no furnace or the unit is rated for <225,000 Btuh indicate "N/A".*
7. *In the left column, enter both the required ventilation value from Table 120.1A and for the number of occupants times 15 cfm/person. In the right column enter the actual minimum ventilation as scheduled. If the space is naturally ventilated enter "N/A" in the left column and "the space is naturally ventilated" in the right column.*
8. *If the space is required to have either DCV or Occupant Sensor Ventilation Control indicate "required" in the left column (otherwise indicate "N/A" in the left column). If either DCV or Occupant Sensor Ventilation Control is provided indicate "provided" in the right column (otherwise indicate "N/A" in the right column)*
9. *In the left column indicate the required time controls from the standard. In the right column identify the device that provides this functionality (e.g. EMCS or programmable timeclock).*
10. *Enter N/A if there is no electric heating. If the system has electric heating indicate which exception to 140.4(g) applies.*
11. *If duct leakage sealing and testing is required, a **MCH-04-A** compliance document must be submitted.*

STATE OF CALIFORNIA
REQUIREMENTS FOR PACKAGED SINGLE ZONE UNITS
CEC-NRCC-MCH-05-E (Revised 01/16) — CALIFORNIA ENERGY COMMISSION

CERTIFICATE OF COMPLIANCE	NRCC-MCH-05-E
Requirements for Packaged Single-Zone Units	(Page 1 of 2)

Project Name: Freedom High School - Building A — Date Prepared: 7/19/2019

Equipment Tag(s)[1]		AC-5		AC-6		AC-7	
MANDATORY MEASURES	*T-24 Sections*	*Requirement*[2]	*As Scheduled*[3]	*Requirement*[2]	*As Scheduled*[3]	*Requirement*[2]	*As Scheduled*[3]
Heating Equipment Efficiency[4]	110.1 or 110.2(a)	78% AFUE	81% AFUE	78% AFUE	81% AFUE	78% AFUE	81% AFUE
Cooling Equipment Efficiency[4]	110.1 or 110.2(a)	11.0 EER	12.5 EER	13 SEER	16.4 SEER / 12	13 SEER	16.4 SEER / 12.5
Thermostats[5]	110.2(b), 110.2(c)	Setback	Setback	Setback	Setback	Setback	Setback
Furnace Standby Loss Control[6]	110.2(d)	n/a		n/a		n/a	
Low Leakage AHU	110.2(f)	NR	none	NR	none	NR	none
Ventilation[7]	120.1(b)	654	875	553	553	147	147
Demand Control Ventilation[8]	120.1(c)4	NR	No	NR	No	NR	No
Occupant Sensor Ventilation Control[9]	120.1(c)5, 120.2(e)3						
Shutoff and Reset Controls[5]	120.2(e)	Req	Programmable	Req	Programmable	Req	Programmable S
Outdoor Air and Exhaust Damper Control	120.2(f)	Req	Auto	Req	Auto	Req	Auto
Automatic Demand Shed Controls	120.2(h)	NR	none	NR	none	NR	none
Economizer FDD	120.2(i)	Req	Yes	NR	No	NR	No
Duct Insulation	120.4	R-8	R-8.0	R-8	R-8.0	R-8	R-8.0
PRESCRIPTIVE MEASURES							
Equipment is sized in conformance with 140.4 (a & b)	140.4(a & b)	134,390 Btu/h 133,772 Btu/h	72,000 Btu/hr 70,265 Btu/hr	123,144 Btu/h 120,866 Btu/h	60,000 Btu/hr 47,292 Btu/hr	60,385 Btu/hr 57,032 Btu/hr	60,000 Btu/hr 37,546 Btu/hr
Economizer	140.4(e)	Req	Diff. Temp (Inte	NR	Diff. Temp (Inte	NR	Diff. Temp (Integ
Electric Resistance Heating[10]	140.4(g)	No	No	No	No	No	No
Duct Leakage Sealing and Testing.[11]	140.4(l)	NR	No	NR	No	NR	No

Notes:
1. *Provide equipment tags (e.g. AC1 or AC1 to 10). Multiple units of the same make and model with the same application and accessories can be grouped together.*
2. *Enter the following information as appropriate: Unit Manufacturer; Unit Model Number (including all accessories); Description of the unit (e.g. gas-pack or heat pump; rated heating capacity (enter "N/A" if no heating); and, rated cooling capacity (enter "N/A" if no cooling). For unit capacities include the units (e.g. kBtuh or tons).*
3. *For each requirement, enter the minimum requirement from the Standard In the left column (under "Standard Requirement"). In the right column (under "As Scheduled") enter the value for the units as specified.*
4. *Where there is more than one requirement (e.g. full and part load efficiency) enter both with the appropriate labels (e.g. COP and IEER).*
5. *In the left column identify the thermostatic requirements from the standard (e.g. programmable setback thermostat or heat pump with electric heat), . In the right column indicate the capabilities of the thermostat as scheduled.*
6. *If the unit has a furnace which is rated at ≥225,000 Btuh of capacity, indicate the rated standby loss and ignition source (e.g. IID). If there is no furnace or the unit is rated for <225,000 Btuh indicate "N/A".*
7. *In the left column, enter both the required ventilation value from Table 120.1A and for the number of occupants times 15 cfm/person. In the right column enter the actual minimum ventilation as scheduled. If the space is naturally ventilated enter "N/A" in the left column and "the space is naturally ventilated" in the right column.*
8. *If the space is required to have either DCV or Occupant Sensor Ventilation Control indicate "required" in the left column (otherwise indicate "N/A" in the left column). If either DCV or Occupant Sensor Ventilation Control is provided indicate "provided" in the right column (otherwise indicate "N/A" in the right column)*
9. *In the left column indicate the required time controls from the standard. In the right column identify the device that provides this functionality (e.g. EMCS or programmable timeclock).*
10. *Enter N/A if there is no electric heating. If the system has electric heating indicate which exception to 140.4(g) applies.*
11. *If duct leakage sealing and testing is required, a **MCH-04-A** compliance document must be submitted.*

STATE OF CALIFORNIA
REQUIREMENTS FOR PACKAGED SINGLE ZONE UNITS
CEC-NRCC-MCH-05-E (Revised 01/16) — CALIFORNIA ENERGY COMMISSION

CERTIFICATE OF COMPLIANCE	NRCC-MCH-05-E
Requirements for Packaged Single-Zone Units	(Page 1 of 2)

Project Name: Freedom High School - Building A — Date Prepared: 7/19/2019

Equipment Tag(s)[1]		FC-6		FC-7			
MANDATORY MEASURES	*T-24 Sections*	*Requirement*[2]	*As Scheduled*[3]	*Requirement*[2]	*As Scheduled*[3]	*Requirement*[2]	*As Scheduled*[3]
Heating Equipment Efficiency[4]	110.1 or 110.2(a)	7.70 HSPF	10.00 HSPF	7.70 HSPF	7.70 HSPF		
Cooling Equipment Efficiency[4]	110.1 or 110.2(a)	14 SEER	18.0 SEER / 10	14 SEER	14.0 SEER / 12		
Thermostats[5]	110.2(b), 110.2(c)	Setback	Setback	Setback	Setback		
Furnace Standby Loss Control[6]	110.2(d)	n/a		n/a			
Low Leakage AHU	110.2(f)	NR	none	NR	none		
Ventilation[7]	120.1(b)	87	87	44	44		
Demand Control Ventilation[8]	120.1(c)4	NR	No	NR	No		
Occupant Sensor Ventilation Control[9]	120.1(c)5, 120.2(e)3						
Shutoff and Reset Controls[5]	120.2(e)	Req	Programmable	Req	Programmable		
Outdoor Air and Exhaust Damper Control	120.2(f)	Req	Auto	Req	Auto		
Automatic Demand Shed Controls	120.2(h)	NR	none	NR	none		
Economizer FDD	120.2(i)	NR	No	NR	No		
Duct Insulation	120.4	R-8	R-8.0	R-8	R-8.0		
PRESCRIPTIVE MEASURES							
Equipment is sized in conformance with 140.4 (a & b)	140.4(a & b)	12,896 Btu/hr 12,706 Btu/hr	14,772 Btu/hr 21,139 Btu/hr	22,595 Btu/hr 17,536 Btu/hr	5,853 Btu/hr 8,678 Btu/hr		
Economizer	140.4(e)	NR	No Economize	NR	No Economize		
Electric Resistance Heating[10]	140.4(g)	No	No	No	No		
Duct Leakage Sealing and Testing.[11]	140.4(l)	NR	No	NR	No		

Notes:
1. *Provide equipment tags (e.g. AC1 or AC1 to 10). Multiple units of the same make and model with the same application and accessories can be grouped together.*
2. *Enter the following information as appropriate: Unit Manufacturer; Unit Model Number (including all accessories); Description of the unit (e.g. gas-pack or heat pump; rated heating capacity (enter "N/A" if no heating); and, rated cooling capacity (enter "N/A" if no cooling). For unit capacities include the units (e.g. kBtuh or tons).*
3. *For each requirement, enter the minimum requirement from the Standard In the left column (under "Standard Requirement"). In the right column (under "As Scheduled") enter the value for the units as specified.*
4. *Where there is more than one requirement (e.g. full and part load efficiency) enter both with the appropriate labels (e.g. COP and IEER).*
5. *In the left column identify the thermostatic requirements from the standard (e.g. programmable setback thermostat or heat pump with electric heat), . In the right column indicate the capabilities of the thermostat as scheduled.*
6. *If the unit has a furnace which is rated at ≥225,000 Btuh of capacity, indicate the rated standby loss and ignition source (e.g. IID). If there is no furnace or the unit is rated for <225,000 Btuh indicate "N/A".*
7. *In the left column, enter both the required ventilation value from Table 120.1A and for the number of occupants times 15 cfm/person. In the right column enter the actual minimum ventilation as scheduled. If the space is naturally ventilated enter "N/A" in the left column and "the space is naturally ventilated" in the right column.*
8. *If the space is required to have either DCV or Occupant Sensor Ventilation Control indicate "required" in the left column (otherwise indicate "N/A" in the left column). If either DCV or Occupant Sensor Ventilation Control is provided indicate "provided" in the right column (otherwise indicate "N/A" in the right column)*
9. *In the left column indicate the required time controls from the standard. In the right column identify the device that provides this functionality (e.g. EMCS or programmable timeclock).*
10. *Enter N/A if there is no electric heating. If the system has electric heating indicate which exception to 140.4(g) applies.*
11. *If duct leakage sealing and testing is required, a **MCH-04-A** compliance document must be submitted.*

STATE OF CALIFORNIA
REQUIREMENTS FOR PACKAGED SINGLE ZONE UNITS
CEC-NRCC-MCH-05-E (Revised 01/16) — CALIFORNIA ENERGY COMMISSION

CERTIFICATE OF COMPLIANCE	NRCC-MCH-05-E
Requirements for Packaged Single-Zone Units	(Page 1 of 2)

Project Name: Freedom High School - Building A — Date Prepared: 7/19/2019

Equipment Tag(s)[1]		AC-8		AC-9		FC-1	
MANDATORY MEASURES	*T-24 Sections*	*Requirement*[2]	*As Scheduled*[3]	*Requirement*[2]	*As Scheduled*[3]	*Requirement*[2]	*As Scheduled*[3]
Heating Equipment Efficiency[4]	110.1 or 110.2(a)	78% AFUE	81% AFUE	78% AFUE	82% AFUE	7.70 HSPF	7.70 HSPF
Cooling Equipment Efficiency[4]	110.1 or 110.2(a)	13 SEER	16.4 SEER / 12	11.0 EER	12.5 EER	14 SEER	14.0 SEER / 12.5
Thermostats[5]	110.2(b), 110.2(c)	Setback	Setback	Setback	Setback	Setback	Setback
Furnace Standby Loss Control[6]	110.2(d)	n/a		n/a		n/a	
Low Leakage AHU	110.2(f)	NR	none	NR	none	NR	none
Ventilation[7]	120.1(b)	181	181	732	827	50	50
Demand Control Ventilation[8]	120.1(c)4	NR	No	Req	Yes	NR	No
Occupant Sensor Ventilation Control[9]	120.1(c)5, 120.2(e)3						
Shutoff and Reset Controls[5]	120.2(e)	Req	Programmable	Req	Programmable	Req	Programmable S
Outdoor Air and Exhaust Damper Control	120.2(f)	Req	Auto	Req	Auto	Req	Auto
Automatic Demand Shed Controls	120.2(h)	NR	none	NR	none	NR	none
Economizer FDD	120.2(i)	NR	No	Req	Yes	NR	No
Duct Insulation	120.4	R-8	R-8.0	R-8	R-8.0	R-8	R-8.0
PRESCRIPTIVE MEASURES							
Equipment is sized in conformance with 140.4 (a & b)	140.4(a & b)	74,692 Btu/hr 69,009 Btu/hr	60,000 Btu/hr 45,362 Btu/hr	198,557 Btu/h 203,860 Btu/h	120,000 Btu/hr 94,784 Btu/hr	5,577 Btu/hr 7,048 Btu/hr	11,149 Btu/hr 15,746 Btu/hr
Economizer	140.4(e)	NR	Diff. Temp (Inte	Req	Diff. Temp (Inte	NR	No Economizer
Electric Resistance Heating[10]	140.4(g)	No	No	No	No	No	No
Duct Leakage Sealing and Testing.[11]	140.4(l)	NR	No	NR	No	NR	No

Notes:
1. *Provide equipment tags (e.g. AC1 or AC1 to 10). Multiple units of the same make and model with the same application and accessories can be grouped together.*
2. *Enter the following information as appropriate: Unit Manufacturer; Unit Model Number (including all accessories); Description of the unit (e.g. gas-pack or heat pump; rated heating capacity (enter "N/A" if no heating); and, rated cooling capacity (enter "N/A" if no cooling). For unit capacities include the units (e.g. kBtuh or tons).*
3. *For each requirement, enter the minimum requirement from the Standard In the left column (under "Standard Requirement"). In the right column (under "As Scheduled") enter the value for the units as specified.*
4. *Where there is more than one requirement (e.g. full and part load efficiency) enter both with the appropriate labels (e.g. COP and IEER).*
5. *In the left column identify the thermostatic requirements from the standard (e.g. programmable setback thermostat or heat pump with electric heat), . In the right column indicate the capabilities of the thermostat as scheduled.*
6. *If the unit has a furnace which is rated at ≥225,000 Btuh of capacity, indicate the rated standby loss and ignition source (e.g. IID). If there is no furnace or the unit is rated for <225,000 Btuh indicate "N/A".*
7. *In the left column, enter both the required ventilation value from Table 120.1A and for the number of occupants times 15 cfm/person. In the right column enter the actual minimum ventilation as scheduled. If the space is naturally ventilated enter "N/A" in the left column and "the space is naturally ventilated" in the right column.*
8. *If the space is required to have either DCV or Occupant Sensor Ventilation Control indicate "required" in the left column (otherwise indicate "N/A" in the left column). If either DCV or Occupant Sensor Ventilation Control is provided indicate "provided" in the right column (otherwise indicate "N/A" in the right column)*
9. *In the left column indicate the required time controls from the standard. In the right column identify the device that provides this functionality (e.g. EMCS or programmable timeclock).*
10. *Enter N/A if there is no electric heating. If the system has electric heating indicate which exception to 140.4(g) applies.*
11. *If duct leakage sealing and testing is required, a **MCH-04-A** compliance document must be submitted.*

STATE OF CALIFORNIA
REQUIREMENTS FOR PACKAGED SINGLE ZONE UNITS
CEC-NRCC-MCH-05-E (Revised 01/16) — CALIFORNIA ENERGY COMMISSION

CERTIFICATE OF COMPLIANCE	NRCC-MCH-05-E
Requirements for Packaged Single-Zone Units	(Page 1 of 2)

Project Name: Freedom High School - Building A — Date Prepared: 7/19/2019

Equipment Tag(s)[1]		FC-3		FC-4		FC-5	
MANDATORY MEASURES	*T-24 Sections*	*Requirement*[2]	*As Scheduled*[3]	*Requirement*[2]	*As Scheduled*[3]	*Requirement*[2]	*As Scheduled*[3]
Heating Equipment Efficiency[4]	110.1 or 110.2(a)	7.70 HSPF	7.70 HSPF	7.70 HSPF	7.70 HSPF	7.70 HSPF	7.70 HSPF
Cooling Equipment Efficiency[4]	110.1 or 110.2(a)	14 SEER	14.0 SEER / 12	14 SEER	14.0 SEER / 12	14 SEER	14.0 SEER / 12.5
Thermostats[5]	110.2(b), 110.2(c)	Setback	Setback	Setback	Setback	Setback	Setback
Furnace Standby Loss Control[6]	110.2(d)	n/a		n/a		n/a	
Low Leakage AHU	110.2(f)	NR	none	NR	none	NR	none
Ventilation[7]	120.1(b)	106	106	72	72	30	30
Demand Control Ventilation[8]	120.1(c)4	NR	No	NR	No	NR	No
Occupant Sensor Ventilation Control[9]	120.1(c)5, 120.2(e)3						
Shutoff and Reset Controls[5]	120.2(e)	Req	Programmable	Req	Programmable	Req	Programmable S
Outdoor Air and Exhaust Damper Control	120.2(f)	Req	Auto	Req	Auto	Req	Auto
Automatic Demand Shed Controls	120.2(h)	NR	none	NR	none	NR	none
Economizer FDD	120.2(i)	NR	No	NR	No	NR	No
Duct Insulation	120.4	R-8	R-8.0	R-8	R-8.0	R-8	R-8.0
PRESCRIPTIVE MEASURES							
Equipment is sized in conformance with 140.4 (a & b)	140.4(a & b)	18,192 Btu/hr 18,034 Btu/hr	13,378 Btu/hr 21,074 Btu/hr	12,293 Btu/hr 6,352 Btu/hr	22,297 Btu/hr 29,504 Btu/hr	11,460 Btu/hr 7,835 Btu/hr	22,297 Btu/hr 29,282 Btu/hr
Economizer	140.4(e)	NR	No Economize	NR	No Economizer	NR	No Economizer
Electric Resistance Heating[10]	140.4(g)	No	No	No	No	No	No
Duct Leakage Sealing and Testing.[11]	140.4(l)	NR	No	NR	No	NR	No

Notes:
1. *Provide equipment tags (e.g. AC1 or AC1 to 10). Multiple units of the same make and model with the same application and accessories can be grouped together.*
2. *Enter the following information as appropriate: Unit Manufacturer; Unit Model Number (including all accessories); Description of the unit (e.g. gas-pack or heat pump; rated heating capacity (enter "N/A" if no heating); and, rated cooling capacity (enter "N/A" if no cooling). For unit capacities include the units (e.g. kBtuh or tons).*
3. *For each requirement, enter the minimum requirement from the Standard In the left column (under "Standard Requirement"). In the right column (under "As Scheduled") enter the value for the units as specified.*
4. *Where there is more than one requirement (e.g. full and part load efficiency) enter both with the appropriate labels (e.g. COP and IEER).*
5. *In the left column identify the thermostatic requirements from the standard (e.g. programmable setback thermostat or heat pump with electric heat), . In the right column indicate the capabilities of the thermostat as scheduled.*
6. *If the unit has a furnace which is rated at ≥225,000 Btuh of capacity, indicate the rated standby loss and ignition source (e.g. IID). If there is no furnace or the unit is rated for <225,000 Btuh indicate "N/A".*
7. *In the left column, enter both the required ventilation value from Table 120.1A and for the number of occupants times 15 cfm/person. In the right column enter the actual minimum ventilation as scheduled. If the space is naturally ventilated enter "N/A" in the left column and "the space is naturally ventilated" in the right column.*
8. *If the space is required to have either DCV or Occupant Sensor Ventilation Control indicate "required" in the left column (otherwise indicate "N/A" in the left column). If either DCV or Occupant Sensor Ventilation Control is provided indicate "provided" in the right column (otherwise indicate "N/A" in the right column)*
9. *In the left column indicate the required time controls from the standard. In the right column identify the device that provides this functionality (e.g. EMCS or programmable timeclock).*
10. *Enter N/A if there is no electric heating. If the system has electric heating indicate which exception to 140.4(g) applies.*
11. *If duct leakage sealing and testing is required, a **MCH-04-A** compliance document must be submitted.*

STATE OF CALIFORNIA
REQUIREMENTS FOR PACKAGED SINGLE ZONE UNITS
CEC-NRCC-MCH-05-E (Revised 01/16) — CALIFORNIA ENERGY COMMISSION

CERTIFICATE OF COMPLIANCE	NRCC-MCH-05-E
Requirements for Packaged Single-Zone Units	(Page 2 of 2)

Project Name: Freedom High School - Building A — Date Prepared: 7/19/2019

DOCUMENTATION AUTHOR'S DECLARATION STATEMENT
1. I certify that this Certificate of Compliance documentation is accurate and complete.

Documentation Author Name:	Matt Hargadon	Documentation Author Signature:	Matt Hargadon
Company:	Guttmann & Blaevoet Consulting Engineers	Signature Date:	7/19/2019
Address:	2351 Powell St.	CEA/HERS Certification Identification (if applicable):	
City/State/Zip:	San Francisco/CA/94133	Phone:	4156554000

RESPONSIBLE PERSON'S DECLARATION STATEMENT
I certify the following under penalty of perjury, under the laws of the State of California:
1. The information provided on this Certificate of Compliance is true and correct.
2. I am eligible under Division 3 of the Business and Professions Code to accept responsibility for the building design or system design identified on this Certificate of Compliance (responsible designer).
3. The energy features and performance specifications, materials, components, and manufactured devices for the building design or system design identified on this Certificate of Compliance conform to the requirements of Title 24, Part 1 and Part 6 of the California Code of Regulations.
4. The building design features or system design features identified on this Certificate of Compliance are consistent with the information provided on other applicable compliance documents, worksheets, calculations, plans and specifications submitted to the enforcement agency for approval with this building permit application.
5. I will ensure that a completed signed copy of this Certificate of Compliance shall be made available with the building permit(s) issued for the building, and made available to the enforcement agency for all applicable inspections. I understand that a completed signed copy of this Certificate of Compliance is required to be included with the documentation the builder provides to the building owner at occupancy.

Responsible Designer Name:	Chris Del Core	Responsible Designer Signature:	
Company:	Costa Engineers inc.	Date Signed:	8-1-19
Address:	3274 Villa Lane	License:	M31600
City/State/Zip:	Napa, CA 94558	Phone:	(707) 252-9177

QUATTROCCHI KWOK ARCHITECTS
Main Office:
636 Fifth Street, Santa Rosa, CA 95404
Pleasanton Office:
600 Main Street, Suite E,
Pleasanton, CA 94566
(707) 576-0829

LICENSED ARCHITECT
JIM THEISS
LICENSE # C22643
EXP JUNE 30, 2021
STATE OF CALIFORNIA

SIGNED: AUGUST 13, 2019

FREEDOM HIGH SCHOOL

PERFORMING ARTS AND CTE FACILITIES

1050 NEROLY RD,
OAKLEY, CA 94561

LIBERTY UNION HIGH SCHOOL DISTRICT

ARCH PROJECT NO: 1739.00
DRAWN BY:
DRAWING SCALE:
PTN: 61721-0068

BID SET

AUGUST 13, 2019

SHEET TITLE

TITLE 24 BLDG A

SHEET NUMBER

T-6

BIM Server: BIMCLOUD-QKA - BIMcloud/1739.00 - Freedom High School/1739.00 FREEDOM HS Performing Arts Center.8/6/2019.5:15 PM

STATE OF CALIFORNIA
FAN POWER CONSUMPTION
CEC-NRCC-MCH-07-E (Revised 01/16) — CALIFORNIA ENERGY COMMISSION

CERTIFICATE OF COMPLIANCE — NRCC-MCH-07-E
Power Consumption of Fans Requirements — (Page 1 of 2)
Project Name: *Freedom High School - Building A* — Date Prepared: *7/19/2019*

A. Constant Volume Fan Systems

NOTE: Provide one copy of this worksheet for each fan system with a total fan system horsepower greater than 25 hp of Constant Volume Fan Systems when using the Prescriptive Approach. See Power Consumption of fans §140.4(c).

01 FAN DESCRIPTION	02 DESIGN BRAKE HP	03 EFFICIENCY MOTOR	03 EFFICIENCY DRIVE	04 NUMBER OF FANS	05 PEAK WATTS A02 x A04 x 746 / (A03a x A03b)
AC-1/AC-2 - Supply Fan	2.960	89.5 %	100.0 %	2.0	4,934

B. Variable Air Volume Fan Systems

NOTE: Provide one copy of this worksheet for each fan system with a total fan system horsepower greater than 25 hp of Variable Air Volume (VAV) Systems when using the Prescriptive Approach. See Power Consumption of fans §140.4(c).

01 FAN DESCRIPTION	02 DESIGN BRAKE HP	03 EFFICIENCY MOTOR	03 EFFICIENCY DRIVE	04 NUMBER OF FANS	05 PEAK WATTS B02 x B04 x 746 / (B03a x B03b)

C. Totals and Adjustments

FILTER PRESSURE ADJUSTMENT Equation 140.4-A in §140.4(c) of the Building Energy Efficiency Standards.	01	TOTAL FAN SYSTEM POWER (WATTS, SUM COLUMN F)	4,934	W
	02	SUPPLY DESIGN AIRFLOW	10,000	CFM
A) If filter pressure drop (SP_x) is greater than 1 inch W. C. or 245 Pascal then enter SP_x on line 4. Enter Total Fan pressure drop across the fan (SP_t) on line 5.	03	TOTAL FAN SYSTEM POWER INDEX (Row 1 / Row 2)[1]	0.493	W/CFM
	04	SP_x		in W.C or Pa
	05	SP_t		in W.C or Pa
B) Calculate Fan Adjustment and enter on line 6.	06	Fan Adjustment = 1-(SP_x – 1)/SP_t		
C) Calculate Adjusted Fan Power Index and enter on row 7	07	ADJUSTED FAN POWER INDEX (Line 3 x Line 6)[1]	0.493	W/CFM

1. TOTAL FAN SYSTEM POWER INDEX or ADJUSTED FAN POWER INDEX must not exceed 0.8 W/cfm for Constant Volume systems or 1.25 W/cfm for VAV systems.

STATE OF CALIFORNIA
FAN POWER CONSUMPTION
CEC-NRCC-MCH-07-E (Revised 01/16) — CALIFORNIA ENERGY COMMISSION

CERTIFICATE OF COMPLIANCE — NRCC-MCH-07-E
Power Consumption of Fans Requirements — (Page 1 of 2)
Project Name: *Freedom High School - Building A* — Date Prepared: *7/19/2019*

A. Constant Volume Fan Systems

NOTE: Provide one copy of this worksheet for each fan system with a total fan system horsepower greater than 25 hp of Constant Volume Fan Systems when using the Prescriptive Approach. See Power Consumption of fans §140.4(c).

01 FAN DESCRIPTION	02 DESIGN BRAKE HP	03 EFFICIENCY MOTOR	03 EFFICIENCY DRIVE	04 NUMBER OF FANS	05 PEAK WATTS A02 x A04 x 746 / (A03a x A03b)
AC-3 - Supply Fan	4.970	89.5 %	100.0 %	1.0	4,143

B. Variable Air Volume Fan Systems

NOTE: Provide one copy of this worksheet for each fan system with a total fan system horsepower greater than 25 hp of Variable Air Volume (VAV) Systems when using the Prescriptive Approach. See Power Consumption of fans §140.4(c).

01 FAN DESCRIPTION	02 DESIGN BRAKE HP	03 EFFICIENCY MOTOR	03 EFFICIENCY DRIVE	04 NUMBER OF FANS	05 PEAK WATTS B02 x B04 x 746 / (B03a x B03b)

C. Totals and Adjustments

FILTER PRESSURE ADJUSTMENT Equation 140.4-A in §140.4(c) of the Building Energy Efficiency Standards.	01	TOTAL FAN SYSTEM POWER (WATTS, SUM COLUMN F)	4,143	W
	02	SUPPLY DESIGN AIRFLOW	6,000	CFM
A) If filter pressure drop (SP_x) is greater than 1 inch W. C. or 245 Pascal then enter SP_x on line 4. Enter Total Fan pressure drop across the fan (SP_t) on line 5.	03	TOTAL FAN SYSTEM POWER INDEX (Row 1 / Row 2)[1]	0.690	W/CFM
	04	SP_x		in W.C or Pa
	05	SP_t		in W.C or Pa
B) Calculate Fan Adjustment and enter on line 6.	06	Fan Adjustment = 1-(SP_x – 1)/SP_t		
C) Calculate Adjusted Fan Power Index and enter on row 7	07	ADJUSTED FAN POWER INDEX (Line 3 x Line 6)[1]	0.690	W/CFM

1. TOTAL FAN SYSTEM POWER INDEX or ADJUSTED FAN POWER INDEX must not exceed 0.8 W/cfm for Constant Volume systems or 1.25 W/cfm for VAV systems.

STATE OF CALIFORNIA
FAN POWER CONSUMPTION
CEC-NRCC-MCH-07-E (Revised 01/16) — CALIFORNIA ENERGY COMMISSION

CERTIFICATE OF COMPLIANCE — NRCC-MCH-07-E
Power Consumption of Fans Requirements — (Page 1 of 2)
Project Name: *Freedom High School - Building A* — Date Prepared: *7/19/2019*

A. Constant Volume Fan Systems

NOTE: Provide one copy of this worksheet for each fan system with a total fan system horsepower greater than 25 hp of Constant Volume Fan Systems when using the Prescriptive Approach. See Power Consumption of fans §140.4(c).

01 FAN DESCRIPTION	02 DESIGN BRAKE HP	03 EFFICIENCY MOTOR	03 EFFICIENCY DRIVE	04 NUMBER OF FANS	05 PEAK WATTS A02 x A04 x 746 / (A03a x A03b)
AC-4 - Supply Fan	3.000	89.5 %	100.0 %	1.0	2,501
Exhaust Fan	0.005	85.5 %	100.0 %	2.0	12

B. Variable Air Volume Fan Systems

NOTE: Provide one copy of this worksheet for each fan system with a total fan system horsepower greater than 25 hp of Variable Air Volume (VAV) Systems when using the Prescriptive Approach. See Power Consumption of fans §140.4(c).

01 FAN DESCRIPTION	02 DESIGN BRAKE HP	03 EFFICIENCY MOTOR	03 EFFICIENCY DRIVE	04 NUMBER OF FANS	05 PEAK WATTS B02 x B04 x 746 / (B03a x B03b)

C. Totals and Adjustments

FILTER PRESSURE ADJUSTMENT Equation 140.4-A in §140.4(c) of the Building Energy Efficiency Standards.	01	TOTAL FAN SYSTEM POWER (WATTS, SUM COLUMN F)	2,513	W
	02	SUPPLY DESIGN AIRFLOW	2,000	CFM
A) If filter pressure drop (SP_x) is greater than 1 inch W. C. or 245 Pascal then enter SP_x on line 4. Enter Total Fan pressure drop across the fan (SP_t) on line 5.	03	TOTAL FAN SYSTEM POWER INDEX (Row 1 / Row 2)[1]	1.256	W/CFM
	04	SP_x		in W.C or Pa
	05	SP_t		in W.C or Pa
B) Calculate Fan Adjustment and enter on line 6.	06	Fan Adjustment = 1-(SP_x – 1)/SP_t		
C) Calculate Adjusted Fan Power Index and enter on row 7	07	ADJUSTED FAN POWER INDEX (Line 3 x Line 6)[1]	1.256	W/CFM

1. TOTAL FAN SYSTEM POWER INDEX or ADJUSTED FAN POWER INDEX must not exceed 0.8 W/cfm for Constant Volume systems or 1.25 W/cfm for VAV systems.

STATE OF CALIFORNIA
FAN POWER CONSUMPTION
CEC-NRCC-MCH-07-E (Revised 01/16) — CALIFORNIA ENERGY COMMISSION

CERTIFICATE OF COMPLIANCE — NRCC-MCH-07-E
Power Consumption of Fans Requirements — (Page 1 of 2)
Project Name: *Freedom High School - Building A* — Date Prepared: *7/19/2019*

A. Constant Volume Fan Systems

NOTE: Provide one copy of this worksheet for each fan system with a total fan system horsepower greater than 25 hp of Constant Volume Fan Systems when using the Prescriptive Approach. See Power Consumption of fans §140.4(c).

01 FAN DESCRIPTION	02 DESIGN BRAKE HP	03 EFFICIENCY MOTOR	03 EFFICIENCY DRIVE	04 NUMBER OF FANS	05 PEAK WATTS A02 x A04 x 746 / (A03a x A03b)
AC-5 - Supply Fan	3.000	89.5 %	100.0 %	1.0	2,501
Exhaust Fan	0.012	85.5 %	100.0 %	1.0	15

B. Variable Air Volume Fan Systems

NOTE: Provide one copy of this worksheet for each fan system with a total fan system horsepower greater than 25 hp of Variable Air Volume (VAV) Systems when using the Prescriptive Approach. See Power Consumption of fans §140.4(c).

01 FAN DESCRIPTION	02 DESIGN BRAKE HP	03 EFFICIENCY MOTOR	03 EFFICIENCY DRIVE	04 NUMBER OF FANS	05 PEAK WATTS B02 x B04 x 746 / (B03a x B03b)

C. Totals and Adjustments

FILTER PRESSURE ADJUSTMENT Equation 140.4-A in §140.4(c) of the Building Energy Efficiency Standards.	01	TOTAL FAN SYSTEM POWER (WATTS, SUM COLUMN F)	2,516	W
	02	SUPPLY DESIGN AIRFLOW	2,400	CFM
A) If filter pressure drop (SP_x) is greater than 1 inch W. C. or 245 Pascal then enter SP_x on line 4. Enter Total Fan pressure drop across the fan (SP_t) on line 5.	03	TOTAL FAN SYSTEM POWER INDEX (Row 1 / Row 2)[1]	1.048	W/CFM
	04	SP_x		in W.C or Pa
	05	SP_t		in W.C or Pa
B) Calculate Fan Adjustment and enter on line 6.	06	Fan Adjustment = 1-(SP_x – 1)/SP_t		
C) Calculate Adjusted Fan Power Index and enter on row 7	07	ADJUSTED FAN POWER INDEX (Line 3 x Line 6)[1]	1.048	W/CFM

1. TOTAL FAN SYSTEM POWER INDEX or ADJUSTED FAN POWER INDEX must not exceed 0.8 W/cfm for Constant Volume systems or 1.25 W/cfm for VAV systems.

STATE OF CALIFORNIA
FAN POWER CONSUMPTION
CEC-NRCC-MCH-07-E (Revised 01/16) — CALIFORNIA ENERGY COMMISSION

CERTIFICATE OF COMPLIANCE — NRCC-MCH-07-E
Power Consumption of Fans Requirements — (Page 1 of 2)
Project Name: *Freedom High School - Building A* — Date Prepared: *7/19/2019*

A. Constant Volume Fan Systems

NOTE: Provide one copy of this worksheet for each fan system with a total fan system horsepower greater than 25 hp of Constant Volume Fan Systems when using the Prescriptive Approach. See Power Consumption of fans §140.4(c).

01 FAN DESCRIPTION	02 DESIGN BRAKE HP	03 EFFICIENCY MOTOR	03 EFFICIENCY DRIVE	04 NUMBER OF FANS	05 PEAK WATTS A02 x A04 x 746 / (A03a x A03b)
AC-6 - Supply Fan	3.000	89.5 %	100.0 %	1.0	2,501

B. Variable Air Volume Fan Systems

NOTE: Provide one copy of this worksheet for each fan system with a total fan system horsepower greater than 25 hp of Variable Air Volume (VAV) Systems when using the Prescriptive Approach. See Power Consumption of fans §140.4(c).

01 FAN DESCRIPTION	02 DESIGN BRAKE HP	03 EFFICIENCY MOTOR	03 EFFICIENCY DRIVE	04 NUMBER OF FANS	05 PEAK WATTS B02 x B04 x 746 / (B03a x B03b)

C. Totals and Adjustments

FILTER PRESSURE ADJUSTMENT Equation 140.4-A in §140.4(c) of the Building Energy Efficiency Standards.	01	TOTAL FAN SYSTEM POWER (WATTS, SUM COLUMN F)	2,501	W
	02	SUPPLY DESIGN AIRFLOW	2,000	CFM
A) If filter pressure drop (SP_x) is greater than 1 inch W. C. or 245 Pascal then enter SP_x on line 4. Enter Total Fan pressure drop across the fan (SP_t) on line 5.	03	TOTAL FAN SYSTEM POWER INDEX (Row 1 / Row 2)[1]	1.250	W/CFM
	04	SP_x		in W.C or Pa
	05	SP_t		in W.C or Pa
B) Calculate Fan Adjustment and enter on line 6.	06	Fan Adjustment = 1-(SP_x – 1)/SP_t		
C) Calculate Adjusted Fan Power Index and enter on row 7	07	ADJUSTED FAN POWER INDEX (Line 3 x Line 6)[1]	1.250	W/CFM

1. TOTAL FAN SYSTEM POWER INDEX or ADJUSTED FAN POWER INDEX must not exceed 0.8 W/cfm for Constant Volume systems or 1.25 W/cfm for VAV systems.

STATE OF CALIFORNIA
FAN POWER CONSUMPTION
CEC-NRCC-MCH-07-E (Revised 01/16) — CALIFORNIA ENERGY COMMISSION

CERTIFICATE OF COMPLIANCE — NRCC-MCH-07-E
Power Consumption of Fans Requirements — (Page 1 of 2)
Project Name: *Freedom High School - Building A* — Date Prepared: *7/19/2019*

A. Constant Volume Fan Systems

NOTE: Provide one copy of this worksheet for each fan system with a total fan system horsepower greater than 25 hp of Constant Volume Fan Systems when using the Prescriptive Approach. See Power Consumption of fans §140.4(c).

01 FAN DESCRIPTION	02 DESIGN BRAKE HP	03 EFFICIENCY MOTOR	03 EFFICIENCY DRIVE	04 NUMBER OF FANS	05 PEAK WATTS A02 x A04 x 746 / (A03a x A03b)
AC-7 - Supply Fan	3.000	89.5 %	100.0 %	1.0	2,501

B. Variable Air Volume Fan Systems

NOTE: Provide one copy of this worksheet for each fan system with a total fan system horsepower greater than 25 hp of Variable Air Volume (VAV) Systems when using the Prescriptive Approach. See Power Consumption of fans §140.4(c).

01 FAN DESCRIPTION	02 DESIGN BRAKE HP	03 EFFICIENCY MOTOR	03 EFFICIENCY DRIVE	04 NUMBER OF FANS	05 PEAK WATTS B02 x B04 x 746 / (B03a x B03b)

C. Totals and Adjustments

FILTER PRESSURE ADJUSTMENT Equation 140.4-A in §140.4(c) of the Building Energy Efficiency Standards.	01	TOTAL FAN SYSTEM POWER (WATTS, SUM COLUMN F)	2,501	W
	02	SUPPLY DESIGN AIRFLOW	1,600	CFM
A) If filter pressure drop (SP_x) is greater than 1 inch W. C. or 245 Pascal then enter SP_x on line 4. Enter Total Fan pressure drop across the fan (SP_t) on line 5.	03	TOTAL FAN SYSTEM POWER INDEX (Row 1 / Row 2)[1]	1.563	W/CFM
	04	SP_x		in W.C or Pa
	05	SP_t		in W.C or Pa
B) Calculate Fan Adjustment and enter on line 6.	06	Fan Adjustment = 1-(SP_x – 1)/SP_t		
C) Calculate Adjusted Fan Power Index and enter on row 7	07	ADJUSTED FAN POWER INDEX (Line 3 x Line 6)[1]	1.563	W/CFM

1. TOTAL FAN SYSTEM POWER INDEX or ADJUSTED FAN POWER INDEX must not exceed 0.8 W/cfm for Constant Volume systems or 1.25 W/cfm for VAV systems.

STATE OF CALIFORNIA
FAN POWER CONSUMPTION
CEC-NRCC-MCH-07-E (Revised 01/16) — CALIFORNIA ENERGY COMMISSION

CERTIFICATE OF COMPLIANCE — NRCC-MCH-07-E
Power Consumption of Fans Requirements — (Page 1 of 2)
Project Name: *Freedom High School - Building A* — Date Prepared: *7/19/2019*

A. Constant Volume Fan Systems

NOTE: Provide one copy of this worksheet for each fan system with a total fan system horsepower greater than 25 hp of Constant Volume Fan Systems when using the Prescriptive Approach. See Power Consumption of fans §140.4(c).

01 FAN DESCRIPTION	02 DESIGN BRAKE HP	03 EFFICIENCY MOTOR	03 EFFICIENCY DRIVE	04 NUMBER OF FANS	05 PEAK WATTS A02 x A04 x 746 / (A03a x A03b)
AC-8 - Supply Fan	3.000	89.5 %	100.0 %	1.0	2,501

B. Variable Air Volume Fan Systems

NOTE: Provide one copy of this worksheet for each fan system with a total fan system horsepower greater than 25 hp of Variable Air Volume (VAV) Systems when using the Prescriptive Approach. See Power Consumption of fans §140.4(c).

01 FAN DESCRIPTION	02 DESIGN BRAKE HP	03 EFFICIENCY MOTOR	03 EFFICIENCY DRIVE	04 NUMBER OF FANS	05 PEAK WATTS B02 x B04 x 746 / (B03a x B03b)

C. Totals and Adjustments

FILTER PRESSURE ADJUSTMENT Equation 140.4-A in §140.4(c) of the Building Energy Efficiency Standards.	01	TOTAL FAN SYSTEM POWER (WATTS, SUM COLUMN F)	2,501	W
	02	SUPPLY DESIGN AIRFLOW	2,000	CFM
A) If filter pressure drop (SP_x) is greater than 1 inch W. C. or 245 Pascal then enter SP_x on line 4. Enter Total Fan pressure drop across the fan (SP_t) on line 5.	03	TOTAL FAN SYSTEM POWER INDEX (Row 1 / Row 2)[1]	1.250	W/CFM
	04	SP_x		in W.C or Pa
	05	SP_t		in W.C or Pa
B) Calculate Fan Adjustment and enter on line 6.	06	Fan Adjustment = 1-(SP_x – 1)/SP_t		
C) Calculate Adjusted Fan Power Index and enter on row 7	07	ADJUSTED FAN POWER INDEX (Line 3 x Line 6)[1]	1.250	W/CFM

1. TOTAL FAN SYSTEM POWER INDEX or ADJUSTED FAN POWER INDEX must not exceed 0.8 W/cfm for Constant Volume systems or 1.25 W/cfm for VAV systems.

STATE OF CALIFORNIA
FAN POWER CONSUMPTION
CEC-NRCC-MCH-07-E (Revised 01/16) — CALIFORNIA ENERGY COMMISSION

CERTIFICATE OF COMPLIANCE — NRCC-MCH-07-E
Power Consumption of Fans Requirements — (Page 1 of 2)
Project Name: *Freedom High School - Building A* — Date Prepared: *7/19/2019*

A. Constant Volume Fan Systems

NOTE: Provide one copy of this worksheet for each fan system with a total fan system horsepower greater than 25 hp of Constant Volume Fan Systems when using the Prescriptive Approach. See Power Consumption of fans §140.4(c).

01 FAN DESCRIPTION	02 DESIGN BRAKE HP	03 EFFICIENCY MOTOR	03 EFFICIENCY DRIVE	04 NUMBER OF FANS	05 PEAK WATTS A02 x A04 x 746 / (A03a x A03b)
AC-9 - Supply Fan	3.000	89.5 %	100.0 %	1.0	2,501
Exhaust Fan	0.005	85.5 %	100.0 %	2.0	12

B. Variable Air Volume Fan Systems

NOTE: Provide one copy of this worksheet for each fan system with a total fan system horsepower greater than 25 hp of Variable Air Volume (VAV) Systems when using the Prescriptive Approach. See Power Consumption of fans §140.4(c).

01 FAN DESCRIPTION	02 DESIGN BRAKE HP	03 EFFICIENCY MOTOR	03 EFFICIENCY DRIVE	04 NUMBER OF FANS	05 PEAK WATTS B02 x B04 x 746 / (B03a x B03b)

C. Totals and Adjustments

FILTER PRESSURE ADJUSTMENT Equation 140.4-A in §140.4(c) of the Building Energy Efficiency Standards.	01	TOTAL FAN SYSTEM POWER (WATTS, SUM COLUMN F)	2,513	W
	02	SUPPLY DESIGN AIRFLOW	3,400	CFM
A) If filter pressure drop (SP_x) is greater than 1 inch W. C. or 245 Pascal then enter SP_x on line 4. Enter Total Fan pressure drop across the fan (SP_t) on line 5.	03	TOTAL FAN SYSTEM POWER INDEX (Row 1 / Row 2)[1]	0.739	W/CFM
	04	SP_x		in W.C or Pa
	05	SP_t		in W.C or Pa
B) Calculate Fan Adjustment and enter on line 6.	06	Fan Adjustment = 1-(SP_x – 1)/SP_t		
C) Calculate Adjusted Fan Power Index and enter on row 7	07	ADJUSTED FAN POWER INDEX (Line 3 x Line 6)[1]	0.739	W/CFM

1. TOTAL FAN SYSTEM POWER INDEX or ADJUSTED FAN POWER INDEX must not exceed 0.8 W/cfm for Constant Volume systems or 1.25 W/cfm for VAV systems.

QUATTROCCHI KWOK ARCHITECTS
Main Office:
636 Fifth Street, Santa Rosa, CA 95404
Pleasanton Office:
600 Main Street, Suite E,
Pleasanton, CA 94566
(707) 576-0829

LICENSED ARCHITECT — JIM THEISS — LICENSE # C22643 — EXP JUNE 30, 2021 — STATE OF CALIFORNIA

SIGNED: AUGUST 13, 2019

FREEDOM HIGH SCHOOL

PERFORMING ARTS AND CTE FACILITIES

1050 NEROLY RD,
OAKLEY, CA 94561

LIBERTY UNION HIGH SCHOOL DISTRICT

ARCH PROJECT NO: 1739.00
DRAWN BY:
DRAWING SCALE:
PTN: 61721-0068

BID SET

AUGUST 13, 2019

SHEET TITLE

TITLE 24 BLDG A

SHEET NUMBER

T-7

BIM Server: BIMCLOUD-QKA - BIMcloud/1739.00 - Freedom High School/1739.00 FREEDOM HS Performing Arts Center.pln 8/6/2019 5:16 PM

STATE OF CALIFORNIA
FAN POWER CONSUMPTION
CEC-NRCC-MCH-07-E (Revised 01/16) — CALIFORNIA ENERGY COMMISSION

CERTIFICATE OF COMPLIANCE	NRCC-MCH-07-E
Power Consumption of Fans Requirements	(Page 1 of 2)
Project Name: *Freedom High School - Building A*	Date Prepared: *7/19/2019*

A. Constant Volume Fan Systems

NOTE: Provide one copy of this worksheet for each fan system with a total fan system horsepower greater than 25 hp of Constant Volume Fan Systems when using the Prescriptive Approach. See Power Consumption of fans §140.4(c).

01	02	03		04	05
FAN DESCRIPTION	DESIGN BRAKE HP	EFFICIENCY		NUMBER OF FANS	PEAK WATTS A02 x A04 x 746 / (A03a x A03b)
		MOTOR	DRIVE		
FC-1 - Supply Fan	*0.250*	*85.5 %*	*100.0 %*	*1.0*	*218*

B. Variable Air Volume Fan Systems

NOTE: Provide one copy of this worksheet for each fan system with a total fan system horsepower greater than 25 hp of Variable Air Volume (VAV) Systems when using the Prescriptive Approach. See Power Consumption of fans §140.4(c).

01	02	03		04	05
FAN DESCRIPTION	DESIGN BRAKE HP	EFFICIENCY		NUMBER OF FANS	PEAK WATTS B02 x B04 x 746 / (B03a x B03b)
		MOTOR	DRIVE		

C. Totals and Adjustments

FILTER PRESSURE ADJUSTMENT Equation 140.4-A in §140.4(c) of the Building Energy Efficiency Standards.	01	TOTAL FAN SYSTEM POWER (WATTS, SUM COLUMN F)	*218*	W
	02	SUPPLY DESIGN AIRFLOW	*500*	CFM
A) If filter pressure drop (SP_d) is greater than 1 inch W. C. or 245 Pascal then enter SP_d on line 4. Enter Total Fan pressure drop across the fan (SP_t) on line 5.	03	TOTAL FAN SYSTEM POWER INDEX (Row 1 / Row 2)[1]	*0.436*	W/CFM
	04	SP_d		in W.C or Pa
	05	SP_t		in W.C or Pa
B) Calculate Fan Adjustment and enter on line 6.	06	Fan Adjustment = 1-(SP_d – 1)/SP_t		
C) Calculate Adjusted Fan Power Index and enter on row 7	07	ADJUSTED FAN POWER INDEX (Line 3 x Line 6)[1]	*0.436*	W/CFM

1. TOTAL FAN SYSTEM POWER INDEX or ADJUSTED FAN POWER INDEX must not exceed 0.8 W/cfm for Constant Volume systems or 1.25 W/cfm for VAV systems.

STATE OF CALIFORNIA
FAN POWER CONSUMPTION
CEC-NRCC-MCH-07-E (Revised 01/16) — CALIFORNIA ENERGY COMMISSION
CERTIFICATE OF COMPLIANCE NRCC-MCH-07-E
Power Consumption of Fans Requirements (Page 1 of 2)
Project Name: *Freedom High School - Building A* Date Prepared: *7/19/2019*

A. Constant Volume Fan Systems

NOTE: Provide one copy of this worksheet for each fan system with a total fan system horsepower greater than 25 hp of Constant Volume Fan Systems when using the Prescriptive Approach. See Power Consumption of fans §140.4(c).

01	02	03		04	05
FAN DESCRIPTION	DESIGN BRAKE HP	EFFICIENCY		NUMBER OF FANS	PEAK WATTS A02 x A04 x 746 / (A03a x A03b)
		MOTOR	DRIVE		
FC-3 - Supply Fan	*0.300*	*85.5 %*	*100.0 %*	*1.0*	*262*

B. Variable Air Volume Fan Systems

NOTE: Provide one copy of this worksheet for each fan system with a total fan system horsepower greater than 25 hp of Variable Air Volume (VAV) Systems when using the Prescriptive Approach. See Power Consumption of fans §140.4(c).

01	02	03		04	05
FAN DESCRIPTION	DESIGN BRAKE HP	EFFICIENCY		NUMBER OF FANS	PEAK WATTS B02 x B04 x 746 / (B03a x B03b)
		MOTOR	DRIVE		

C. Totals and Adjustments

FILTER PRESSURE ADJUSTMENT Equation 140.4-A in §140.4(c) of the Building Energy Efficiency Standards.	01	TOTAL FAN SYSTEM POWER (WATTS, SUM COLUMN F)	*262*	W
	02	SUPPLY DESIGN AIRFLOW	*635*	CFM
A) If filter pressure drop (SP_d) is greater than 1 inch W. C. or 245 Pascal then enter SP_d on line 4. Enter Total Fan pressure drop across the fan (SP_t) on line 5.	03	TOTAL FAN SYSTEM POWER INDEX (Row 1 / Row 2)[1]	*0.412*	W/CFM
	04	SP_d		in W.C or Pa
	05	SP_t		in W.C or Pa
B) Calculate Fan Adjustment and enter on line 6.	06	Fan Adjustment = 1-(SP_d – 1)/SP_t		
C) Calculate Adjusted Fan Power Index and enter on row 7	07	ADJUSTED FAN POWER INDEX (Line 3 x Line 6)[1]	*0.412*	W/CFM

1. TOTAL FAN SYSTEM POWER INDEX or ADJUSTED FAN POWER INDEX must not exceed 0.8 W/cfm for Constant Volume systems or 1.25 W/cfm for VAV systems.

CA Building Energy Efficiency Standards - 2016 Nonresidential Compliance January 2016

STATE OF CALIFORNIA
FAN POWER CONSUMPTION
CEC-NRCC-MCH-07-E (Revised 01/16) — CALIFORNIA ENERGY COMMISSION
CERTIFICATE OF COMPLIANCE NRCC-MCH-07-E
Power Consumption of Fans Requirements (Page 1 of 2)
Project Name: *Freedom High School - Building A* Date Prepared: *7/19/2019*

A. Constant Volume Fan Systems

NOTE: Provide one copy of this worksheet for each fan system with a total fan system horsepower greater than 25 hp of Constant Volume Fan Systems when using the Prescriptive Approach. See Power Consumption of fans §140.4(c).

01	02	03		04	05
FAN DESCRIPTION	DESIGN BRAKE HP	EFFICIENCY		NUMBER OF FANS	PEAK WATTS A02 x A04 x 746 / (A03a x A03b)
		MOTOR	DRIVE		
FC-4 - Supply Fan	*0.500*	*85.5 %*	*100.0 %*	*1.0*	*436*

B. Variable Air Volume Fan Systems

NOTE: Provide one copy of this worksheet for each fan system with a total fan system horsepower greater than 25 hp of Variable Air Volume (VAV) Systems when using the Prescriptive Approach. See Power Consumption of fans §140.4(c).

01	02	03		04	05
FAN DESCRIPTION	DESIGN BRAKE HP	EFFICIENCY		NUMBER OF FANS	PEAK WATTS B02 x B04 x 746 / (B03a x B03b)
		MOTOR	DRIVE		

C. Totals and Adjustments

FILTER PRESSURE ADJUSTMENT Equation 140.4-A in §140.4(c) of the Building Energy Efficiency Standards.	01	TOTAL FAN SYSTEM POWER (WATTS, SUM COLUMN F)	*436*	W
	02	SUPPLY DESIGN AIRFLOW	*830*	CFM
A) If filter pressure drop (SP_d) is greater than 1 inch W. C. or 245 Pascal then enter SP_d on line 4. Enter Total Fan pressure drop across the fan (SP_t) on line 5.	03	TOTAL FAN SYSTEM POWER INDEX (Row 1 / Row 2)[1]	*0.526*	W/CFM
	04	SP_d		in W.C or Pa
	05	SP_t		in W.C or Pa
B) Calculate Fan Adjustment and enter on line 6.	06	Fan Adjustment = 1-(SP_d – 1)/SP_t		
C) Calculate Adjusted Fan Power Index and enter on row 7	07	ADJUSTED FAN POWER INDEX (Line 3 x Line 6)[1]	*0.526*	W/CFM

1. TOTAL FAN SYSTEM POWER INDEX or ADJUSTED FAN POWER INDEX must not exceed 0.8 W/cfm for Constant Volume systems or 1.25 W/cfm for VAV systems.

CA Building Energy Efficiency Standards - 2016 Nonresidential Compliance January 2016

STATE OF CALIFORNIA
FAN POWER CONSUMPTION
CEC-NRCC-MCH-07-E (Revised 01/16) — CALIFORNIA ENERGY COMMISSION
CERTIFICATE OF COMPLIANCE NRCC-MCH-07-E
Power Consumption of Fans Requirements (Page 1 of 2)
Project Name: *Freedom High School - Building A* Date Prepared: *7/19/2019*

A. Constant Volume Fan Systems

NOTE: Provide one copy of this worksheet for each fan system with a total fan system horsepower greater than 25 hp of Constant Volume Fan Systems when using the Prescriptive Approach. See Power Consumption of fans §140.4(c).

01	02	03		04	05
FAN DESCRIPTION	DESIGN BRAKE HP	EFFICIENCY		NUMBER OF FANS	PEAK WATTS A02 x A04 x 746 / (A03a x A03b)
		MOTOR	DRIVE		
FC-5 - Supply Fan	*0.500*	*85.5 %*	*100.0 %*	*1.0*	*436*

B. Variable Air Volume Fan Systems

NOTE: Provide one copy of this worksheet for each fan system with a total fan system horsepower greater than 25 hp of Variable Air Volume (VAV) Systems when using the Prescriptive Approach. See Power Consumption of fans §140.4(c).

01	02	03		04	05
FAN DESCRIPTION	DESIGN BRAKE HP	EFFICIENCY		NUMBER OF FANS	PEAK WATTS B02 x B04 x 746 / (B03a x B03b)
		MOTOR	DRIVE		

C. Totals and Adjustments

FILTER PRESSURE ADJUSTMENT Equation 140.4-A in §140.4(c) of the Building Energy Efficiency Standards.	01	TOTAL FAN SYSTEM POWER (WATTS, SUM COLUMN F)	*436*	W
	02	SUPPLY DESIGN AIRFLOW	*830*	CFM
A) If filter pressure drop (SP_d) is greater than 1 inch W. C. or 245 Pascal then enter SP_d on line 4. Enter Total Fan pressure drop across the fan (SP_t) on line 5.	03	TOTAL FAN SYSTEM POWER INDEX (Row 1 / Row 2)[1]	*0.526*	W/CFM
	04	SP_d		in W.C or Pa
	05	SP_t		in W.C or Pa
B) Calculate Fan Adjustment and enter on line 6.	06	Fan Adjustment = 1-(SP_d – 1)/SP_t		
C) Calculate Adjusted Fan Power Index and enter on row 7	07	ADJUSTED FAN POWER INDEX (Line 3 x Line 6)[1]	*0.526*	W/CFM

1. TOTAL FAN SYSTEM POWER INDEX or ADJUSTED FAN POWER INDEX must not exceed 0.8 W/cfm for Constant Volume systems or 1.25 W/cfm for VAV systems.

CA Building Energy Efficiency Standards - 2016 Nonresidential Compliance January 2016

STATE OF CALIFORNIA
FAN POWER CONSUMPTION
CEC-NRCC-MCH-07-E (Revised 01/16) — CALIFORNIA ENERGY COMMISSION
CERTIFICATE OF COMPLIANCE NRCC-MCH-07-E
Power Consumption of Fans Requirements (Page 1 of 2)
Project Name: *Freedom High School - Building A* Date Prepared: *7/19/2019*

A. Constant Volume Fan Systems

NOTE: Provide one copy of this worksheet for each fan system with a total fan system horsepower greater than 25 hp of Constant Volume Fan Systems when using the Prescriptive Approach. See Power Consumption of fans §140.4(c).

01	02	03		04	05
FAN DESCRIPTION	DESIGN BRAKE HP	EFFICIENCY		NUMBER OF FANS	PEAK WATTS A02 x A04 x 746 / (A03a x A03b)
		MOTOR	DRIVE		
FC-6 - Supply Fan	*0.250*	*85.5 %*	*100.0 %*	*1.0*	*218*

B. Variable Air Volume Fan Systems

NOTE: Provide one copy of this worksheet for each fan system with a total fan system horsepower greater than 25 hp of Variable Air Volume (VAV) Systems when using the Prescriptive Approach. See Power Consumption of fans §140.4(c).

01	02	03		04	05
FAN DESCRIPTION	DESIGN BRAKE HP	EFFICIENCY		NUMBER OF FANS	PEAK WATTS B02 x B04 x 746 / (B03a x B03b)
		MOTOR	DRIVE		

C. Totals and Adjustments

FILTER PRESSURE ADJUSTMENT Equation 140.4-A in §140.4(c) of the Building Energy Efficiency Standards.	01	TOTAL FAN SYSTEM POWER (WATTS, SUM COLUMN F)	*218*	W
	02	SUPPLY DESIGN AIRFLOW	*500*	CFM
A) If filter pressure drop (SP_d) is greater than 1 inch W. C. or 245 Pascal then enter SP_d on line 4. Enter Total Fan pressure drop across the fan (SP_t) on line 5.	03	TOTAL FAN SYSTEM POWER INDEX (Row 1 / Row 2)[1]	*0.436*	W/CFM
	04	SP_d		in W.C or Pa
	05	SP_t		in W.C or Pa
B) Calculate Fan Adjustment and enter on line 6.	06	Fan Adjustment = 1-(SP_d – 1)/SP_t		
C) Calculate Adjusted Fan Power Index and enter on row 7	07	ADJUSTED FAN POWER INDEX (Line 3 x Line 6)[1]	*0.436*	W/CFM

1. TOTAL FAN SYSTEM POWER INDEX or ADJUSTED FAN POWER INDEX must not exceed 0.8 W/cfm for Constant Volume systems or 1.25 W/cfm for VAV systems.

CA Building Energy Efficiency Standards - 2016 Nonresidential Compliance January 2016

STATE OF CALIFORNIA
FAN POWER CONSUMPTION
CEC-NRCC-MCH-07-E (Revised 01/16) — CALIFORNIA ENERGY COMMISSION
CERTIFICATE OF COMPLIANCE NRCC-MCH-07-E
Power Consumption of Fans Requirements (Page 1 of 2)
Project Name: *Freedom High School - Building A* Date Prepared: *7/19/2019*

A. Constant Volume Fan Systems

NOTE: Provide one copy of this worksheet for each fan system with a total fan system horsepower greater than 25 hp of Constant Volume Fan Systems when using the Prescriptive Approach. See Power Consumption of fans §140.4(c).

01	02	03		04	05
FAN DESCRIPTION	DESIGN BRAKE HP	EFFICIENCY		NUMBER OF FANS	PEAK WATTS A02 x A04 x 746 / (A03a x A03b)
		MOTOR	DRIVE		
FC-7 - Supply Fan	*0.250*	*85.5 %*	*100.0 %*	*1.0*	*218*

B. Variable Air Volume Fan Systems

NOTE: Provide one copy of this worksheet for each fan system with a total fan system horsepower greater than 25 hp of Variable Air Volume (VAV) Systems when using the Prescriptive Approach. See Power Consumption of fans §140.4(c).

01	02	03		04	05
FAN DESCRIPTION	DESIGN BRAKE HP	EFFICIENCY		NUMBER OF FANS	PEAK WATTS B02 x B04 x 746 / (B03a x B03b)
		MOTOR	DRIVE		

C. Totals and Adjustments

FILTER PRESSURE ADJUSTMENT Equation 140.4-A in §140.4(c) of the Building Energy Efficiency Standards.	01	TOTAL FAN SYSTEM POWER (WATTS, SUM COLUMN F)	*218*	W
	02	SUPPLY DESIGN AIRFLOW	*280*	CFM
A) If filter pressure drop (SP_d) is greater than 1 inch W. C. or 245 Pascal then enter SP_d on line 4. Enter Total Fan pressure drop across the fan (SP_t) on line 5.	03	TOTAL FAN SYSTEM POWER INDEX (Row 1 / Row 2)[1]	*0.779*	W/CFM
	04	SP_d		in W.C or Pa
	05	SP_t		in W.C or Pa
B) Calculate Fan Adjustment and enter on line 6.	06	Fan Adjustment = 1-(SP_d – 1)/SP_t		
C) Calculate Adjusted Fan Power Index and enter on row 7	07	ADJUSTED FAN POWER INDEX (Line 3 x Line 6)[1]	*0.779*	W/CFM

1. TOTAL FAN SYSTEM POWER INDEX or ADJUSTED FAN POWER INDEX must not exceed 0.8 W/cfm for Constant Volume systems or 1.25 W/cfm for VAV systems.

CA Building Energy Efficiency Standards - 2016 Nonresidential Compliance January 2016

STATE OF CALIFORNIA
FAN POWER CONSUMPTION
CEC-NRCC-MCH-07-E (Revised 08/17) — CALIFORNIA ENERGY COMMISSION

CERTIFICATE OF COMPLIANCE	NRCC-MCH-07-E
Power Consumption of Fans Requirements	(Page 2 of 2)
Project Name: Freedom High School - Building A	Date Prepared: 7/19/2019

DOCUMENTATION AUTHOR'S DECLARATION STATEMENT

1. I certify that this Certificate of Compliance documentation is accurate and complete.

Documentation Author Name:	Matt Hargadon	Documentation Author Signature:	Matt Hargadon
Company:	Guttmann & Blaevoet Consulting Engine	Signature Date:	7/19/2019
Address:	2351 Powell St.	CEA/ HERS Certification Identification (if applicable):	
City/State/Zip:	San Francisco/CA/94133	Phone:	4156554000

RESPONSIBLE PERSON'S DECLARATION STATEMENT

I certify the following under penalty of perjury, under the laws of the State of California:
1. The information provided on this Certificate of Compliance is true and correct.
2. I am eligible under Division 3 of the Business and Professions Code to accept responsibility for the building design or system design identified on this Certificate of Compliance (responsible designer).
3. The energy features and performance specifications, materials, components, and manufactured devices for the building design or system design identified on this Certificate of Compliance conform to the requirements of Title 24, Part 1 and Part 6 of the California Code of Regulations.
4. The building design features or system design features identified on this Certificate of Compliance are consistent with the information provided on other applicable compliance documents, worksheets, calculations, plans and specifications submitted to the enforcement agency for approval with this building permit application.
5. I will ensure that a completed signed copy of this Certificate of Compliance shall be made available with the building permit(s) issued for the building, and made available to the enforcement agency for all applicable inspections. I understand that a completed signed copy of this Certificate of Compliance is required to be included with the documentation the builder provides to the building owner at occupancy.

Responsible Designer Name:	Chris Del Core	Responsible Designer Signature:	
Company:	Costa Engineers inc.	Date Signed:	8-1-19
Address:	3274 Villa Lane	License:	M31600
City/State/Zip:	Napa, CA 94558	Phone:	(707) 252-9177

CA Building Energy Efficiency Standards - 2016 Nonresidential Compliance January 2016

STATE OF CALIFORNIA
WATER HEATING SYSTEM GENERAL INFORMATION
CEC-NRCC-PLB-01-E (Revised 01/16) — CALIFORNIA ENERGY COMMISSION

CERTIFICATE OF COMPLIANCE	NRCC-PLB-01-E
Water Heating System General Information	(Page 1 of 2)
Project Name: *Freedom High School - Building A*	Date Prepared: *7/19/2019*

A. GENERAL INFORMATION/SYSTEM INFORMATION

01	Water Heater System Name:	*EWH AO Smith DEL10*
02	Water Heater System Configuration:	*Non-Central*
03	Water Heater System Type:	
04	Building Type:	
05	Total Number of Water Heaters in Systems:	*2*
06	Central DHW Distribution Type:	*n/a*
07	Dwelling Unit DHW Distribution Type:	*Standard*

B. WATER HEATER INFORMATION

Each water heater type requires a separate compliance document.

01	Water Heater Type:	*Small Storage Electric*
02	Fuel Type:	*Electric Res*
03	Manufacture Name:	*EWH AO Smith DEL10*
04	Model Number:	
05	Number of Identical Water Heaters:	*2*
06	Installed Water Heater System Efficiency:	*0.95*
07	Required Minimum Efficiency:	*0.95*
08	Standby Loss Percent or Standby Loss Total:	*0.000*
09	Rated Input:	*8.530*
10	Pilot Energy:	
11	Water Heater Tank Storage Volume:	*10*
12	Exterior Insulation on Water Heater:	*0*
13	Volume of Supplemental Storage:	
14	Internal Insulation on Supplemental Storage:	
15	Exterior Insulation on Supplemental Storage:	

C. PLUMBING COMPLIANCE FORMS & WORKSHEETS

Check box if worksheet is included.

For detailed instructions on the use of this and all Energy Standards compliance documents, refer to the 2016 Nonresidential Manual
Note: The Enforcement Agency may require all compliance documents to be incorporated onto the building plans.

YES	NO	Doc/Worksheet #	Title
☒	☐	NRCC-PLB-01-E	Certificate of Compliance, Declaration. Required on plans for all submittals.
☒	☐	NRCI-PLB-01-E	Certificate of Installation. Required on plans for all submittals.
☐	☐	NRCI-PLB-02-E	Certificate of Installation, required on central systems in high-rise residential, hotel/motel application.
☐	☐	NRCI-PLB-03-E	Certificate of Installation, required on single dwelling unit systems in high-rise residential, hotel/motel application.
☐	☐	NRCI-PLB-21-H	Certificate of Installation, required on HERS verified central systems in high-rise residential, hotel/motel application.
☐	☐	NRCI-PLB-22-H	Certificate of Installation, required on HERS verified single dwelling unit systems in high-rise residential, hotel/motel application.
☐	☐	NRCI-STH-01-E	Certificate of Installation, required on any solar water heating

CA Building Energy Efficiency Standards - 2016 Nonresidential Compliance January 2016

QUATTROCCHI KWOK ARCHITECTS
Main Office:
636 Fifth Street, Santa Rosa, CA 95404
Pleasanton Office:
600 Main Street, Suite E,
Pleasanton, CA 94566
(707) 576-0829

LICENSED ARCHITECT
JIM THEISS
LICENSE # C22643
EXP JUNE 30, 2021
STATE OF CALIFORNIA

SIGNED: AUGUST 13, 2019

FREEDOM HIGH SCHOOL

PERFORMING ARTS AND CTE FACILITIES

1050 NEROLY RD,
OAKLEY, CA 94561

LIBERTY UNION HIGH SCHOOL DISTRICT

ARCH PROJECT NO: 1739.00
DRAWN BY:
DRAWING SCALE:
PTN: 61721-0068

BID SET

AUGUST 13, 2019

SHEET TITLE

TITLE 24 BLDG A

SHEET NUMBER

T-8

BIM Server: BIMCLOUD-QKA - BIMcloud/1739.00 - Freedom High School/1739.00 FREEDOM HS Performing Arts Center;8/6/2019;5:16 PM

STATE OF CALIFORNIA
WATER HEATING SYSTEM GENERAL INFORMATION
CEC-NRCC-PLB-01-E (Revised 01/16) CALIFORNIA ENERGY COMMISSION

CERTIFICATE OF COMPLIANCE	NRCC-PLB-01-E
Water Heating System General Information	(Page 1 of 2)
Project Name: Freedom High School - Building A	Date Prepared: 7/19/2019

A. GENERAL INFORMATION/SYSTEM INFORMATION

01	Water Heater System Name:	EWH Chronomite M-15L/208
02	Water Heater System Configuration:	Non-Central
03	Water Heater System Type:	
04	Building Type:	
05	Total Number of Water Heaters in Systems:	2
06	Central DHW Distribution Type:	n/a
07	Dwelling Unit DHW Distribution Type:	Standard

B. WATER HEATER INFORMATION
Each water heater type requires a separate compliance document.

01	Water Heater Type:	Small Instantaneous Electric
02	Fuel Type:	Electric Res
03	Manufacture Name:	EWH Chronomite M-15L/208
04	Model Number:	
05	Number of Identical Water Heaters:	2
06	Installed Water Heater System Efficiency:	0.95
07	Required Minimum Efficiency:	0.95
08	Standby Loss Percent or Standby Loss Total:	0.000
09	Rated Input:	10,646
10	Pilot Energy:	
11	Water Heater Tank Storage Volume:	2
12	Exterior Insulation on Water Heater:	0
13	Volume of Supplemental Storage:	
14	Internal Insulation on Supplemental Storage:	
15	Exterior Insulation on Supplemental Storage:	

C. PLUMBING COMPLIANCE FORMS & WORKSHEETS
Check box if worksheet is included.
For detailed instructions on the use of this and all Energy Standards compliance documents, refer to the 2016 Nonresidential Manual
Note: The Enforcement Agency may require all compliance documents to be incorporated onto the building plans.

YES	NO	Doc/Worksheet #	Title
☒	☐	NRCC-PLB-01-E	Certificate of Compliance, Declaration. Required on plans for all submittals.
☒	☐	NRCI-PLB-01-E	Certificate of Installation. Required on plans for all submittals.
☐	☐	NRCI-PLB-02-E	Certificate of Installation, required on central systems in high-rise residential, hotel/motel application.
☐	☐	NRCI-PLB-03-E	Certificate of Installation, required on single dwelling unit systems in high-rise residential, hotel/motel application.
☐	☐	NRCI-PLB-21-H	Certificate of Installation, required on HERS verified central systems in high-rise residential, hotel/motel application.
☐	☐	NRCI-PLB-22-H	Certificate of Installation, required on HERS verified single dwelling unit systems in high-rise residential, hotel/motel application.
☐	☐	NRCI-STH-01-E	Certificate of Installation, required on any solar water heating

STATE OF CALIFORNIA
WATER HEATING SYSTEM GENERAL INFORMATION
CEC-NRCC-PLB-01-E (Revised 01/16) CALIFORNIA ENERGY COMMISSION

CERTIFICATE OF COMPLIANCE	NRCC-PLB-01-E
Water Heating System General Information	(Page 2 of 2)
Project Name: Freedom High School - Building A	Date Prepared: 7/19/2019

DOCUMENTATION AUTHOR'S DECLARATION STATEMENT
1. I certify that this Certificate of Compliance documentation is accurate and complete.

Documentation Author Name: Matt Hargadon | Documentation Author Signature: Matt Hargadon

Company: Guttmann & Blaevoet Consulting Er | Signature Date: 7/19/2019
Address: 2351 Powell St. | CEA/ HERS Certification Identification (if applicable):
City/State/Zip: San Francisco/CA/94133 | Phone: 4156554000

RESPONSIBLE PERSON'S DECLARATION STATEMENT
I certify the following under penalty of perjury, under the laws of the State of California:
1. The information provided on this Certificate of Compliance is true and correct.
2. I am eligible under Division 3 of the Business and Professions Code to accept responsibility for the building design or system design identified on this Certificate of Compliance (responsible designer).
3. The energy features and performance specifications, materials, components, and manufactured devices for the building design or system design identified on this Certificate of Compliance conform to the requirements of Title 24, Part 1 and Part 6 of the California Code of Regulations.
4. The building design features or system design features identified on this Certificate of Compliance are consistent with the information provided on other applicable compliance documents, worksheets, calculations, plans and specifications submitted to the enforcement agency for approval with this building permit application.
5. I will ensure that a completed signed copy of this Certificate of Compliance shall be made available with the building permit(s) issued for the building, and made available to the enforcement agency for all applicable inspections. I understand that a completed signed copy of this Certificate of Compliance is required to be included with the documentation the builder provides to the building owner at occupancy.

Responsible Designer Name: Chris Del Core | Responsible Designer Signature:
Company: Costa Engineers inc. | Date Signed: 8-1-19
Address: 3274 Villa Lane | License: M31600
City/State/Zip: Napa, CA 94558 | Phone: (707) 252-9177

STATE OF CALIFORNIA
OUTDOOR LIGHTING
CEC-NRCC-LTO-01-E (Revised 04/16) CALIFORNIA ENERGY COMMISSION

CERTIFICATE OF COMPLIANCE	NRCC-LTO-01-E
Outdoor Lighting	(Page 1 of 4)
Project Name: Freedom High School - Building A	Date Prepared: 7/19/2019

A. General Information

Project Address:	1050 Neroly Road Oakley, CA 94561	Total Illuminated Hardscape Area:	40,500
Phase of Construction:	☑ New Construction ☐ Addition	☐ Alteration	
Outdoor Lighting Zone (LZ)	☐ LZ-1 ☐ LZ-2	☑ LZ-3 ☐ LZ-4	

I have confirmed with the AHJ which LZ applies to this site. For default lighting zone designations, see Title 24 Part 6, §10-114

B. Lighting Compliance Documents (check box for each document included)
For detailed instructions on the use of this and all Energy Efficiency Standards compliance documents, refer to the Nonresidential Manual published by the California Energy Commission.

☑	NRCC-LTO-01-E	Certificate of Compliance
☑	NRCC-LTO-02-E	Outdoor Lighting Controls Certificate of Compliance
☑	NRCC-LTO-03-E	Outdoor Lighting Power Allowance Certificate of Compliance
☐	NRCC-LTO-04-E	Outdoor Lighting Existing Conditions Certificate of Compliance

C. Summary of Allowed Outdoor Lighting Power

		Watts
01	**Sum Total ALLOWED** Outdoor Lighting Wattage from NRCC-LTO-03-E, page 1 Alterations with NO increase of connected lighting load may instead use the allowed wattage from NRCC-LTO-04, page 2.	4,821
	Complies ONLY if **Installed** (Box 02) ≤ **Allowed** (Box 01)	
02	**Sum Total INSTALLED** Outdoor Lighting Wattage from NRCC-LTO-01-E, page 3.	4,558

D. Declaration of Required Installation Certificates
Declare by checking all Installation Certificates that will be submitted. (Retain copies and verify compliance documents are completed and signed.)

☑ NRCI-LTO-01-E - Must be submitted for all buildings	☐ Field Inspector
☑ NRCI-LTO-02-E - Must be submitted for a lighting control system, or for an Energy Management Control System (EMCS), to be recognized for compliance.	☐ Field Inspector

E. Declaration of Required Certificates of Acceptance
Declare by checking all of the Certificates of Acceptance that will be submitted. (Retain copies and verify compliance documents are completed and signed.)

☑ NRCA-LTO-02-A - Must be submitted for outdoor lighting controls.	☐ Field Inspector

F. Schedule of Luminaires Exempt from the Outdoor Lighting Power Requirements in §140.7

01	02
Name or Symbol	Description of exempt luminaire in accordance with the exemptions

STATE OF CALIFORNIA
OUTDOOR LIGHTING
CEC-NRCC-LTO-01-E (Revised 04/16) CALIFORNIA ENERGY COMMISSION

CERTIFICATE OF COMPLIANCE	NRCC-LTO-01-E
Outdoor Lighting	(Page 2 of 4)
Project Name: Freedom High School - Building A	Date Prepared: 7/19/2019

G. Schedule of Luminaires Exempt from the Cutoff Requirements in §130.2(b)

01	02
Name or Symbol	Description of exempt luminaire in accordance with the exemptions

H. Schedule of Luminaires Exempt from the Outdoor Lighting Control Requirements in §130.2(c)

01	02
Name or Symbol	Description of exempt luminaire in accordance with the exemptions

STATE OF CALIFORNIA
OUTDOOR LIGHTING
CEC-NRCC-LTO-01-E (Revised 02/16) CALIFORNIA ENERGY COMMISSION

CERTIFICATE OF COMPLIANCE	NRCC-LTO-01-E
Outdoor Lighting	(Page 3 of 4)
Project Name: Freedom High School - Building A	Date Prepared: 7/19/2019

I. Outdoor Lighting Schedule and Field Inspection Energy Checklist

Luminaire Schedule		Installed Watts					Location	Cutoff	Field Inspector	
01	02	03	04		05	06	07	08	09	
Name or Item Tag	Complete Luminaire Description	Watts per Luminaire	How wattage was determined: CEC Default from NA8	How wattage was determined: According to §130.0(c)	Number of Luminaires	Total Installed Watts in this area (3 x 5)	Primary Function area in which the luminaires are installed (Outdoor Lighting Zone)	BUG Rating	Pass	Fail
C16	C16	30.0	☐	☑	4	120	Other Entrance/Exit	UH: n/a UL: n/a FVH: n/a BVH: n/a FH: n/a BH: n/a	☐	☐
C11	C11	25.0	☐	☑	7	175	Other Entrance/Exit	UH: n/a UL: n/a FVH: n/a BVH: n/a FH: n/a BH: n/a	☐	☐
W3A	W3A	26.0	☐	☑	2	52	Other Entrance/Exit	UH: n/a UL: n/a FVH: n/a BVH: n/a FH: n/a BH: n/a	☐	☐
					INSTALLED WATTS PAGE TOTAL:	347	Enter sum total of all pages (**Sum Total INSTALLED** Outdoor lighting wattage) into NRCC-LTO-01-E, page 1.		4,558	

STATE OF CALIFORNIA
OUTDOOR LIGHTING
CEC-NRCC-LTO-01-E (Revised 02/16) CALIFORNIA ENERGY COMMISSION

CERTIFICATE OF COMPLIANCE	NRCC-LTO-01-E
Outdoor Lighting	(Page 3 of 4)
Project Name: Freedom High School - Building A	Date Prepared: 7/19/2019

I. Outdoor Lighting Schedule and Field Inspection Energy Checklist

Luminaire Schedule		Installed Watts					Location	Cutoff	Field Inspector	
01	02	03	04		05	06	07	08	09	
Name or Item Tag	Complete Luminaire Description	Watts per Luminaire	How wattage was determined: CEC Default from NA8	How wattage was determined: According to §130.0(c)	Number of Luminaires	Total Installed Watts in this area (3 x 5)	Primary Function area in which the luminaires are installed (Outdoor Lighting Zone)	BUG Rating	Pass	Fail
W3A	W3A	26.0	☐	☑	5	130	Building Facade	UH: n/a UL: n/a FVH: n/a BVH: n/a FH: n/a BH: n/a	☐	☐
C17	C17	110.0	☐	☑	19	2,090	Building Facade	UH: n/a UL: n/a FVH: n/a BVH: n/a FH: n/a BH: n/a	☐	☐
C16	C16	30.0	☐	☑	7	210	Non Sales Canopy	UH: n/a UL: n/a FVH: n/a BVH: n/a FH: n/a BH: n/a	☐	☐
					INSTALLED WATTS PAGE TOTAL:	2,430	Enter sum total of all pages (**Sum Total INSTALLED** Outdoor lighting wattage) into NRCC-LTO-01-E, page 1.		4,558	

STATE OF CALIFORNIA
OUTDOOR LIGHTING
CEC-NRCC-LTO-01-E (Revised 02/16) CALIFORNIA ENERGY COMMISSION

CERTIFICATE OF COMPLIANCE	NRCC-LTO-01-E
Outdoor Lighting	(Page 3 of 4)
Project Name: Freedom High School - Building A	Date Prepared: 7/19/2019

I. Outdoor Lighting Schedule and Field Inspection Energy Checklist

Luminaire Schedule		Installed Watts					Location	Cutoff	Field Inspector	
01	02	03	04		05	06	07	08	09	
Name or Item Tag	Complete Luminaire Description	Watts per Luminaire	How wattage was determined: CEC Default from NA8	How wattage was determined: According to §130.0(c)	Number of Luminaires	Total Installed Watts in this area (3 x 5)	Primary Function area in which the luminaires are installed (Outdoor Lighting Zone)	BUG Rating	Pass	Fail
S3	S3	74.0	☐	☑	7	518	Automotive Hardscape	UH: n/a UL: n/a FVH: n/a BVH: n/a FH: n/a BH: n/a	☐	☐
G1	G1	44.0	☐	☑	7	308	Pedestrian Hardscape	UH: n/a UL: n/a FVH: n/a BVH: n/a FH: n/a BH: n/a	☐	☐
G2	G2	14.0	☐	☑	4	56	Pedestrian Hardscape	UH: n/a UL: n/a FVH: n/a BVH: n/a FH: n/a BH: n/a	☐	☐
					INSTALLED WATTS PAGE TOTAL:	882	Enter sum total of all pages (**Sum Total INSTALLED** Outdoor lighting wattage) into NRCC-LTO-01-E, page 1.		4,558	

QUATTROCCHI KWOK ARCHITECTS
Main Office:
636 Fifth Street, Santa Rosa, CA 95404
Pleasanton Office:
600 Main Street, Suite E,
Pleasanton, CA 94566
(707) 576-0829

LICENSED ARCHITECT
JIM THEISS
LICENSE # C22643
EXP JUNE 30, 2021
STATE OF CALIFORNIA

SIGNED: AUGUST 13, 2019

FREEDOM HIGH SCHOOL

PERFORMING ARTS AND CTE FACILITIES

1050 NEROLY RD,
OAKLEY, CA 94561

LIBERTY UNION HIGH SCHOOL DISTRICT

ARCH PROJECT NO: 1739.00
DRAWN BY:
DRAWING SCALE:
PTN: 61721-0068

BID SET

AUGUST 13, 2019

SHEET TITLE

TITLE 24 BLDG A

SHEET NUMBER

T-9

BIM Server: BIMCLOUD-QKA - BIMcloud/1739.00 - Freedom High School/1739.00 FREEDOM HS Performing Arts Center:8/6/2019 5:16 PM

STATE OF CALIFORNIA
OUTDOOR LIGHTING
CEC-NRCC-LTO-01-E (Revised 02/16) — CALIFORNIA ENERGY COMMISSION

CERTIFICATE OF COMPLIANCE	NRCC-LTO-01-E
Outdoor Lighting	(Page 3 of 4)
Project Name: Freedom High School - Building A	Date Prepared: 7/19/2019

I. Outdoor Lighting Schedule and Field Inspection Energy Checklist

Luminaire Schedule		Installed Watts					Location	Cutoff		Field Inspector	
01	02	03	04		05	06	07	08		09	
Name or Item Tag	Complete Luminaire Description	Watts per Luminaire	How wattage was determined: CEC Default from NA8	How wattage was determined: According to §130.0(c)	Number of Luminaires	Total Installed Watts (03 x 05)	Primary Function area in which the luminaires are installed (Outdoor Lighting Zone)	BUG Rating		Pass	Fail
S5	S5	75.0	☐	☑	7	525	Pedestrian Hardscape	UH: n/a UL: n/a FVH: n/a BVH: n/a FH: n/a BH: n/a		☐	☐
S5	S5	75.0	☐	☑	4	300	Student Pick-up/Drop-off Zor	UH: n/a UL: n/a FVH: n/a BVH: n/a FH: n/a BH: n/a		☐	☐
S3	S3	74.0	☐	☑	1	74	Student Pick-up/Drop-off Zon	UH: n/a UL: n/a FVH: n/a BVH: n/a FH: n/a BH: n/a		☐	☐
				INSTALLED WATTS PAGE TOTAL:		899	Enter sum total of all pages (**Sum Total INSTALLED** Outdoor lighting wattage) into NRCC-LTO-01-E, page 1.		4,558		

STATE OF CALIFORNIA
OUTDOOR LIGHTING
CEC-NRCC-LTO-01-E (Revised 02/16) — CALIFORNIA ENERGY COMMISSION

CERTIFICATE OF COMPLIANCE	NRCC-LTO-01-E
Outdoor Lighting	(Page 4 of 4)
Project Name: Freedom High School - Building A	Date Prepared: 7/19/2019

DOCUMENTATION AUTHOR'S DECLARATION STATEMENT

1. I certify that this Certificate of Compliance documentation is accurate and complete.

Documentation Author Name: Matt Hargadon	Documentation Author Signature: Matt Hargadon
Company: Guttmann & Blaevoet Consulting Engir	Signature Date: 7/19/2019
Address: 2351 Powell St.	CEA Certification Identification (if applicable):
City/State/Zip: San Francisco/CA/94133	Phone: 4156554000

RESPONSIBLE PERSON'S DECLARATION STATEMENT

I certify the following under penalty of perjury, under the laws of the State of California:
1. The information provided on this Certificate of Compliance is true and correct.
2. I am eligible under Division 3 of the Business and Professions Code to accept responsibility for the building design or system design identified on this Certificate of Compliance (responsible designer).
3. The energy features and performance specifications, materials, components, and manufactured devices for the building design or system design identified on this Certificate of Compliance conform to the requirements of Title 24, Part 1 and Part 6 of the California Code of Regulations.
4. The building design features or system design features identified on this Certificate of Compliance are consistent with the information provided on other applicable compliance documents, worksheets, calculations, plans and specifications submitted to the enforcement agency for approval with this building permit application.
5. I will ensure that a completed signed copy of this Certificate of Compliance shall be made available with the building permit(s) issued for the building, and made available to the enforcement agency for all applicable inspections. I understand that a completed signed copy of this Certificate of Compliance is required to be included with the documentation the builder provides to the building owner at occupancy.

Responsible Designer Name: Pieter Colenbrander	Responsible Designer Signature: P. Colenbrander
Company: O'Mahony & Myer	Date Signed: 8/1/19
Address: 4340 Redwood Hwt, Suite 245	License: E14738
City/State/Zip: San Rafael, CA 94903	Phone: (415) 492-0420

STATE OF CALIFORNIA
OUTDOOR LIGHTING CONTROLS
CEC-NRCC-LTO-02-E (Revised 08/16) — CALIFORNIA ENERGY COMMISSION

CERTIFICATE OF COMPLIANCE	NRCC-LTO-02-E
Outdoor Lighting Controls	(Page 1 of 3)
Project Name: Freedom High School - Building A	Date Prepared: 7/19/2019

A. Mandatory Outdoor Lighting Control Declaration Statements

Check all that apply:

- ☑ Lighting shall be controlled by self-contained lighting control devices which are certified to the Energy Commission according to the Title 20 Appliance Efficiency Regulations in accordance with §110.9(a).
- ☐ Lighting shall be controlled by a lighting control system or energy management control system in accordance with §110.9. An Installation Certificate shall be submitted in accordance with §130.4(b).
- ☑ All lighting controls and equipment shall comply with the applicable requirements in §110.9 and shall be installed in accordance with the manufacturer's instructions in accordance with §130.0(d).
- ☐ Part-Night Outdoor Lighting Controls, as defined in Section 100.1(b), shall meet the requirements in Section 110.9(b)5.
- ☐ All outdoor incandescent luminaires rated over 100 watts, determined in accordance with Section 130.0(c), shall be controlled by a motion sensor.
- ☑ All outdoor luminaires rated for use with lamps greater than 150 lamp watts, determined in accordance with Section 130.0(c), shall comply with Uplight and Glare requirements in accordance with Section 130.2(b).
- ☐ All installed outdoor lighting shall be controlled by a photocontrol or outdoor astronomical time-switch control, or other control capable of automatically switching OFF in accordance with Section 130.2(c)1.
- ☑ All installed outdoor lighting shall be independently controlled from other electrical loads by an automatic scheduling control in accordance with Section 130.2(c)2.
- ☐ All installed outdoor lighting, where the bottom of the luminaire is mounted 24 feet or less above the ground, shall be controlled with automatic lighting controls in accordance with Section 130.2(c)3.
- ☐ For Outdoor Sales Frontage, an automatic lighting control shall be installed in accordance with Section 130.2(c)4.
- ☐ For Building Facade, Ornamental Hardscape and Outdoor Dining lighting, an automatic lighting control shall be installed in accordance with Section 130.2(c)5.
- ☑ Before an occupancy permit is granted for the newly constructed building or for the addition, or for any altered outdoor lighting, the outdoor lighting controls shall be certified as meeting the Acceptance Requirements for Code Compliance in accordance with §130.4.(a). Outdoor lighting controls shall comply with the applicable requirements of Section 130.2(c) and Reference Nonresidential Appendix NA7.8.

STATE OF CALIFORNIA
OUTDOOR LIGHTING CONTROLS
CEC-NRCC-LTO-02-E (Revised 08/16) — CALIFORNIA ENERGY COMMISSION

CERTIFICATE OF COMPLIANCE	NRCC-LTO-02-E
Outdoor Lighting Controls	(Page 2 of 3)
Project Name: Freedom High School - Building A	Date Prepared: 7/19/2019

B. Mandatory Outdoor Lighting Control Schedule and Field Inspection Checklist

Outdoor Lighting Control Schedule			Standards Complying With (✓ all that apply, or enter 'E' if Exempted)						✓ If Acceptance Test Required	Field Inspector	
01	02	03	04	05	06	07	08	09	10	11	
Location and Application of Luminaires Being Controlled	Type/ Description of Lighting Control (i.e. outdoor motion sensor, outdoor photocontrol, outdoor astronomical time-switch control, automatic scheduling control, part-night outdoor lighting control)	# of Units	§130.2(a)	§130.2(c)1	§130.2(c)2	§130.2(c)3	§130.2(c)4	§130.2(c)5		Pass	Fail
									☐	☐	☐
									☐	☐	☐
									☐	☐	☐
									☐	☐	☐
									☐	☐	☐
									☐	☐	☐
									☐	☐	☐
									☐	☐	☐
									☐	☐	☐
									☐	☐	☐
									☐	☐	☐
									☐	☐	☐
									☐	☐	☐
									☐	☐	☐
									☐	☐	☐
									☐	☐	☐
									☐	☐	☐

STATE OF CALIFORNIA
OUTDOOR LIGHTING CONTROLS
CEC-NRCC-LTO-02-E (Revised 08/16) — CALIFORNIA ENERGY COMMISSION

CERTIFICATE OF COMPLIANCE	NRCC-LTO-02-E
Outdoor Lighting Controls	(Page 3 of 3)
Project Name: Freedom High School - Building A	Date Prepared: 7/19/2019

DOCUMENTATION AUTHOR'S DECLARATION STATEMENT

1. I certify that this Certificate of Compliance documentation is accurate and complete.

Documentation Author Name: Matt Hargadon	Documentation Author Signature: Matt Hargadon
Company: Guttmann & Blaevoet Consulting Engin	Signature Date: 7/19/2019
Address: 2351 Powell St.	CEA Certification Identification (if applicable):
City/State/Zip: San Francisco/CA/94133	Phone: 4156554000

RESPONSIBLE PERSON'S DECLARATION STATEMENT

I certify the following under penalty of perjury, under the laws of the State of California:
1. The information provided on this Certificate of Compliance is true and correct.
2. I am eligible under Division 3 of the Business and Professions Code to accept responsibility for the building design or system design identified on this Certificate of Compliance (responsible designer).
3. The energy features and performance specifications, materials, components, and manufactured devices for the building design or system design identified on this Certificate of Compliance conform to the requirements of Title 24, Part 1 and Part 6 of the California Code of Regulations.
4. The building design features or system design features identified on this Certificate of Compliance are consistent with the information provided on other applicable compliance documents, worksheets, calculations, plans and specifications submitted to the enforcement agency for approval with this building permit application.
5. I will ensure that a completed signed copy of this Certificate of Compliance shall be made available with the building permit(s) issued for the building, and made available to the enforcement agency for all applicable inspections. I understand that a completed signed copy of this Certificate of Compliance is required to be included with the documentation the builder provides to the building owner at occupancy.

Responsible Designer Name: Pieter Colenbrander	Responsible Designer Signature: P. Colenbrander
Company: O'Mahony & Myer	Date Signed: 8/1/19
Address: 4340 Redwood Hwt, Suite 245	License: E14738
City/State/Zip: San Rafael, CA 94903	Phone: (415) 492-0420

STATE OF CALIFORNIA
OUTDOOR LIGHTING POWER ALLOWANCES
CEC-NRCC-LTO-03-E (Revised 01/16) — CALIFORNIA ENERGY COMMISSION

CERTIFICATE OF COMPLIANCE	NRCC-LTO-03-E
Outdoor Lighting Power Allowances	(Page 1 of 4)
Project Name: Freedom High School - Building A	Date Prepared: 7/19/2019

A. OUTDOOR LIGHTING POWER ALLOWANCE SUMMARY

1. General Hardscape Lighting Power Allowance (Site Total from Section B of NRCC-LTO-03-E)	1.	3,015
2. Additional Specific "use it or lose it" Lighting Power Allowances listed in each of these cells shall be identical to total allowed watts determined in Section C-1 to C-4 of NRCC-LTO-03-E.		
PER APPLICATION from Section C-1: 347 + PER UNIT LENGTH (SALES FRONTAGE) from Section C-2: 0 + PER HARDSCAPE AREA (ORNAMENTAL LIGHTING) from Section C-3: 0 + PER SPECIFIC AREA from Section C-4.: 1,459 =	2.	1,806
3. **Sum Total ALLOWED** Outdoor Lighting Wattage (add rows 1 and 2)	3.	4,821

B. GENERAL HARDSCAPE LIGHTING POWER ALLOWANCE FROM TABLE 140.7-A

Area Wattage Allowance (AWA)				Linear Wattage Allowance (LWA)			Initial Wattage Allowance (IWA)	Total General Hardscape Lighting Allowance
01	02	03	04	05	06	07	08	09
Name of Area	Illuminated Hardscape Area	AWA Per Square Foot	AWA (B02 x B03)	Perimeter Length of General Hardscape	LPA per Linear Foot	LWA (B05 x B06)	IWA (Watts)	B04 + B07 + B08
Auto Hardscape	30,000	0.040	1,200	1,300	0.350	455	520	2,175
Ped Hardscape	10,500	0.040	420	1,200	0.350	420	0	840
							TOTAL	3,015

STATE OF CALIFORNIA
OUTDOOR LIGHTING POWER ALLOWANCES
CEC-NRCC-LTO-03-E (Revised 01/16) — CALIFORNIA ENERGY COMMISSION

CERTIFICATE OF COMPLIANCE	NRCC-LTO-03-E
Outdoor Lighting Power Allowances	(Page 2 of 4)
Project Name: Freedom High School - Building A	Date Prepared: 7/19/2019

C. ADDITIONAL "USE IT OR LOSE IT" OUTDOOR LIGHTING POWER ALLOWANCES FOR SPECIFIC APPLICATIONS

- ☐ The additional specific outdoor lighting power allowance shall be the smaller of the allowed lighting power or the actual lighting power used.
- ☐ Use Outdoor Lighting Zone (OLZ) that is documented on page 1 of NRCC-LTO-01-E to calculate the specific wattage allowances.

C-1. WATTAGE ALLOWANCE PER APPLICATION – Table 140.7-B

☐ Available only for qualifying locations, which include Building Entrances or Exits; Primary Entrances to Senior Care Facilities, Police Stations, Hospitals, Fire Stations, and Emergency Vehicle Facilities; Drive Up Windows; Vehicle Service Station Uncovered Fuel Dispenser, ATM Machine Lighting

☐ If more than one luminaire type is used per location, use multiple rows for that location

01	02	03	04	05	06	07	08	09	10
	ALLOTTED WATTS			DESIGN WATTS					
Name of Location for Which Allowance is Claimed	Number of Qualifying Locations	Wattage Allowance per Qualifying Location	Allotted Watts (02 x 03)	Luminaire Code or Symbol	Luminaire Description	Luminaire Quantity	Watts per Luminaire	Design Watts (07 x 08)	Allowed Watts (smaller of 04 or 09)
Entrance/Exit	11	35	385	C16	C16	4	30.0	120	347
				C11	C11	7	25.0	175	
				W3A	W3A	2	26.0	52	
								Sum total allowance per application on this site:	347

C-2. WATTAGE ALLOWANCE PER UNIT LENGTH (Sales Frontage) from Table 140.7-B

☐ If more than one luminaire type is used per location, use multiple rows for that location

01	02	03	04	05	06	07	08	09	10
	ALLOTTED WATTS			DESIGN WATTS					
Name of Location for Which Allowance is Claimed	Linear Feet of Sales Frontage	Wattage Allowance per Linear Foot	Allotted Watts (02 x 03)	Luminaire Code or Symbol	Luminaire Description	Luminaire Quantity	Watts per Luminaire	Design Watts (07 x 08)	Allowed Watts (smaller of 04 or 09)
								Sum total allowance for sales frontage on the site:	0

STATE OF CALIFORNIA
OUTDOOR LIGHTING POWER ALLOWANCES
CEC-NRCC-LTO-03-E (Revised 01/16) — CALIFORNIA ENERGY COMMISSION

CERTIFICATE OF COMPLIANCE	NRCC-LTO-03-E
Outdoor Lighting Power Allowances	(Page 3 of 4)
Project Name: Freedom High School - Building A	Date Prepared: 7/19/2019

C-3. WATTAGE ALLOWANCE PER SQUARE FOOT OF HARDSCAPE AREA (Ornamental Lighting) – Table 140.7-B

☐ Allowance for the total site illuminated hardscape area. Luminaires qualifying for this allowance shall be rated for 100 watts or less as determined in accordance with Section 130.0(c), and shall be post-top luminaires, lanterns, pendant luminaires, or chandeliers.

☐ If more than one luminaire type is used per location, use multiple rows for that location

01	02	03	04	05	06	07	08	09	10
	ALLOTTED WATTS			DESIGN WATTS					
Name of area for which ornamental allowance is claimed	Square Feet of Hardscape	Wattage Allowance per Square Foot	Allotted Watts (02 x 03)	Luminaire Code or Symbol	Luminaire Description	Luminaire Quantity	Watts per Luminaire	Design Watts (07 x 08)	Allowed Watts (smaller of 04 or 09)
								Sum total allowance for ornamental lighting on the site:	0

C-4. WATTAGE ALLOWANCE PER SQUARE FOOT OF SPECIFIC AREA - Table 140.7-B

☐ Allowances for Building Facades; Outdoor Sales Lots; Vehicle Service Station Hardscape; Vehicle Service Station Canopies; Sales Canopies; Non-sales Canopies; Tunnels; Guard Stations; Student Pick-up/Drop-off zone: Outdoor Dining; Special Security Lighting for Retail Parking and Pedestrian Hardscape.

☐ If more than one luminaire type is used per location, use multiple rows for that location

01	02	03	04	05	06	07	08	09	10
	ALLOTTED WATTS			DESIGN WATTS					
Name of Location for Which Allowance is Claimed	Illuminated Area of Application	Wattage Allowance per square Foot	Allotted Watts (02 x 03)	Luminaire Code or Symbol	Luminaire Description	Luminaire Quantity	Watts per Luminaire	Design Watts (07 x 08)	Allowed Watts (smaller of 04 or 09)
Facade	2,500	0.350	875	W3A	W3A	5	26.0	130	875
				C17	C17	13	110.0	1,430	
				C17	C17	6	110.0	660	
NS Canopy	583	0.408	238	C16	C16	7	30.0	210	210
								Sum total allowance for specific area on the site:	1,459

STATE OF CALIFORNIA
OUTDOOR LIGHTING POWER ALLOWANCES
CEC-NRCC-LTO-03-E (Revised 01/16) — CALIFORNIA ENERGY COMMISSION

CERTIFICATE OF COMPLIANCE	NRCC-LTO-03-E
Outdoor Lighting Power Allowances	(Page 3 of 4)
Project Name: Freedom High School - Building A	Date Prepared: 7/19/2019

C-3. WATTAGE ALLOWANCE PER SQUARE FOOT OF HARDSCAPE AREA (Ornamental Lighting) – Table 140.7-B

☐ Allowance for the total site illuminated hardscape area. Luminaires qualifying for this allowance shall be rated for 100 watts or less as determined in accordance with Section 130.0(c), and shall be post-top luminaires, lanterns, pendant luminaires, or chandeliers.

☐ If more than one luminaire type is used per location, use multiple rows for that location

01	02	03	04	05	06	07	08	09	10
	ALLOTTED WATTS			DESIGN WATTS					
Name of area for which ornamental allowance is claimed	Square Feet of Hardscape	Wattage Allowance per Square Foot	Allotted Watts (02 x 03)	Luminaire Code or Symbol	Luminaire Description	Luminaire Quantity	Watts per Luminaire	Design Watts (07 x 08)	Allowed Watts (smaller of 04 or 09)
								Sum total allowance for ornamental lighting on the site:	0

C-4. WATTAGE ALLOWANCE PER SQUARE FOOT OF SPECIFIC AREA - Table 140.7-B

☐ Allowances for Building Facades; Outdoor Sales Lots; Vehicle Service Station Hardscape; Vehicle Service Station Canopies; Sales Canopies; Non-sales Canopies; Tunnels; Guard Stations; Student Pick-up/Drop-off zone: Outdoor Dining; Special Security Lighting for Retail Parking and Pedestrian Hardscape.

☐ If more than one luminaire type is used per location, use multiple rows for that location

01	02	03	04	05	06	07	08	09	10
	ALLOTTED WATTS			DESIGN WATTS					
Name of Location for Which Allowance is Claimed	Illuminated Area of Application	Wattage Allowance per square Foot	Allotted Watts (02 x 03)	Luminaire Code or Symbol	Luminaire Description	Luminaire Quantity	Watts per Luminaire	Design Watts (07 x 08)	Allowed Watts (smaller of 04 or 09)
Pick up/Drop Off	5,000	0.450	2,250	S5	S5	4	75.0	300	374
				S3	S3	1	74.0	74	
								Sum total allowance for specific area on the site:	1,459

QUATTROCCHI KWOK ARCHITECTS
Main Office:
636 Fifth Street, Santa Rosa, CA 95404
Pleasanton Office:
600 Main Street, Suite E,
Pleasanton, CA 94566
(707) 576-0829

LICENSED ARCHITECT
JIM THEISS
LICENSE # C22643
EXP JUNE 30, 2021
STATE OF CALIFORNIA

SIGNED: AUGUST 13, 2019

FREEDOM HIGH SCHOOL

PERFORMING ARTS AND CTE FACILITIES

1050 NEROLY RD,
OAKLEY, CA 94561

LIBERTY UNION HIGH SCHOOL DISTRICT

ARCH PROJECT NO: 1739.00
DRAWN BY:
DRAWING SCALE:
PTN: 61721-0068

BID SET

AUGUST 13, 2019

SHEET TITLE

TITLE 24 BLDG A

SHEET NUMBER

T-10

BIM Server: BIMCLOUD-QKA - BIMcloud/1739.00 - Freedom High School/1739.00 FREEDOM HS Performing Arts Center 8/6/2019 5:16 PM

STATE OF CALIFORNIA
OUTDOOR LIGHTING POWER ALLOWANCES
CEC-NRCC-LTO-03-E (Revised 01/16) — CALIFORNIA ENERGY COMMISSION

CERTIFICATE OF COMPLIANCE	NRCC-LTO-03-E
Outdoor Lighting Power Allowances	(Page 4 of 4)
Project Name: Freedom High School - Building A	Date Prepared: 7/19/2019

DOCUMENTATION AUTHOR'S DECLARATION STATEMENT

1. I certify that this Certificate of Compliance documentation is accurate and complete.

Documentation Author Name:	Matt Hargadon	Documentation Author Signature:	Matt Hargadon
Company:	Guttmann & Blaevoet Consulting Engineers	Signature Date:	7/19/2019
Address:	2351 Powell St.	CEA Certification Identification (if applicable):	
City/State/Zip:	San Francisco/CA/94133	Phone:	4156554000

RESPONSIBLE PERSON'S DECLARATION STATEMENT

I certify the following under penalty of perjury, under the laws of the State of California:
1. The information provided on this Certificate of Compliance is true and correct.
2. I am eligible under Division 3 of the Business and Professions Code to accept responsibility for the building design or system design identified on this Certificate of Compliance (responsible designer).
3. The energy features and performance specifications, materials, components, and manufactured devices for the building design or system design identified on this Certificate of Compliance conform to the requirements of Title 24, Part 1 and Part 6 of the California Code of Regulations.
4. The building design features or system design features identified on this Certificate of Compliance are consistent with the information provided on other applicable compliance documents, worksheets, calculations, plans and specifications submitted to the enforcement agency for approval with this building permit application.
5. I will ensure that a completed signed copy of this Certificate of Compliance shall be made available with the building permit(s) issued for the building, and made available to the enforcement agency for all applicable inspections. I understand that a completed signed copy of this Certificate of Compliance is required to be included with the documentation the builder provides to the building owner at occupancy.

Responsible Designer Name:	Pieter Colenbrander	Responsible Designer Signature:	P. Colenbrander
Company:	O'Mahony & Myer	Date Signed:	8/1/19
Address:	4340 Redwood Hwt, Suite 245	License:	E14738
City/State/Zip:	San Rafael, CA 94903	Phone:	(415) 492-0420

Project Name:	Freedom High School	NRCC-PRF-01-E	Page 1 of 20
Project Address:	1050 Neroly Road Oakley 94561	Calculation Date/Time:	14:29, Fri, Jul 19, 2019
Compliance Scope:	NewComplete	Input File Name:	Freedom HS_constructionLab.cibd16x

A. PROJECT GENERAL INFORMATION

1.	Project Location (city)	Oakley	8.	Standards Version	Compliance2016
2.	CA Zip Code	94561	9.	Compliance Software (version)	EnergyPro 7.2
3.	Climate Zone	12	10.	Weather File	CONCORD_724936_CZ2010.epw
4.	Total Conditioned Floor Area in Scope	3,529 ft²	11.	Building Orientation (deg)	(N) 0 deg
5.	Total Unconditioned Floor Area	0 ft²	12.	Permitted Scope of Work	NewComplete
6.	Total # of Stories (Habitable Above Grade)	1	13	Building Type(s)	Nonresidential
7.	Total # of dwelling units	0	14	Gas Type	NaturalGas

B. COMPLIANCE RESULTS FOR PERFORMANCE COMPONENTS (Annual TDV Energy Use, kBtu/ft²-yr) — § 140.1

BUILDING COMPLIES

1. Energy Component	2. Standard Design (TDV)	3. Proposed Design (TDV)	4. Compliance Margin (TDV)	5. Percent Better than Standard
Space Heating	15.82	21.64	-5.82	-36.8%
Space Cooling	84.41	79.26	5.15	6.1%
Indoor Fans	96.18	29.27	66.91	69.6%
Heat Rejection	--	--	--	--
Pumps & Misc.	--	--	--	--
Domestic Hot Water	9.79	31.16	-21.37	-218.3%
Indoor Lighting	57.78	31.84	25.94	44.9%
COMPLIANCE TOTAL	**263.98**	**193.17**	**70.81**	**26.8%**
Receptacle	67.36	67.36	0.0	0.0%
Process	--	--	--	--
Other Ltg	--	--	--	--
Process Motors	--	--	--	--
TOTAL	**331.34**	**260.53**	**70.8**	**21.4%**

Project Name:	Freedom High School	NRCC-PRF-01-E	Page 2 of 20
Project Address:	1050 Neroly Road Oakley 94561	Calculation Date/Time:	14:29, Fri, Jul 19, 2019
Compliance Scope:	NewComplete	Input File Name:	Freedom HS_constructionLab.cibd16x

C. PRIORITY PLAN CHECK/ INSPECTION ITEMS (in order of highest to lowest TDV energy savings)

1st	Indoor Fans: Check envelope and mechanical
2nd	Indoor Lighting: Check lighting
3rd	Space Cooling: Check envelope and mechanical
4th	Heat Rejection: Check envelope and mechanical
5th	Pumps & Misc.: Check mechanical
6th	Space Heating: Check envelope and mechanical
7th	Domestic Hot Water: Check mechanical

Compliance Margin By Energy Component (from Table B column 4)

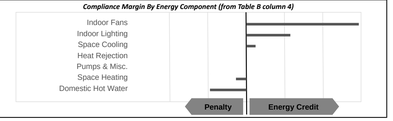

D. EXCEPTIONAL CONDITIONS

This project uses the Simplified Geometry Performance Modeling Approach which is not capable of modeling daylighting controls and assumes the prescriptive Secondary Daylit Control requirements are met. PRESCRIPTIVE COMPLIANCE documentation (form NRCC-LTI-02-E) for the requirements of section 140.6(d) Automatic Daylighting Controls in Secondary Daylit Zones is required.

This project includes Domestic Hot Water in the analysis. Please verify that Domestic Hot Water is included in the design for the permitted scope of work.

The user model includes space(s) that are designed to be served by mechanical cooling systems, but the cooling systems were not included in the simulation model. A cooling system has been modeled for both the proposed and standard cases.

E. HERS VERIFICATION

This Section Does Not Apply

F. ADDITIONAL REMARKS

None Provided

QUATTROCCHI KWOK ARCHITECTS
Main Office:
636 Fifth Street, Santa Rosa, CA 95404
Pleasanton Office:
600 Main Street, Suite E,
Pleasanton, CA 94566
(707) 576-0829

LICENSED ARCHITECT
JIM THEISS
LICENSE # C22643
EXP JUNE 30, 2021
STATE OF CALIFORNIA

SIGNED: AUGUST 13, 2019

FREEDOM HIGH SCHOOL

PERFORMING ARTS AND CTE FACILITIES

1050 NEROLY RD,
OAKLEY, CA 94561

LIBERTY UNION HIGH SCHOOL DISTRICT

ARCH PROJECT NO: 1739.00
DRAWN BY:
DRAWING SCALE:
PTN: 61721-0068

BID SET

AUGUST 13, 2019

SHEET TITLE

TITLE 24 BLDG A & B

SHEET NUMBER

T-11

BIM Server: BIMCLOUD-QKA - BIMcloud/1739.00 - Freedom High School/1739.00 FREEDOM HS Performing Arts Center-8(6/2019 5:16 PM

Project Name:	Freedom High School	NRCC-PRF-01-E	Page 3 of 20
Project Address:	1050 Neroly Road Oakley 94561	Calculation Date/Time:	14:29, Fri, Jul 19, 2019
Compliance Scope:	NewComplete	Input File Name:	Freedom HS_constructionLab.cibd16x

G. COMPLIANCE PATH & CERTIFICATE OF COMPLIANCE SUMMARY

Identify which building components use the performance or prescriptive path for compliance. "NA"= not in project
For components that utilize the performance path, indicate the sheet number that includes mandatory notes on plans.

Building Component	Compliance Path	Compliance Forms *(required for submittal)*	Location of Mandatory Notes on Plans
Envelope	☒ Performance	NRCC-PRF-ENV-DETAILS (section of the NRCC-PRF-01-E)	
	☐ Prescriptive	NRCC-ENV-01 / 02 / 03 / 04 / 05 / 06-E	
	☐ NA		
Mechanical	☒ Performance	NRCC-PRF-MCH-DETAILS (section of the NRCC-PRF-01-E)	
	☐ Prescriptive	NRCC-MCH-01 / 02 / 03 / 04 / 05 / 06 / 07-E	
	☐ NA		
Domestic Hot Water	☒ Performance	NRCC-PRF-PLB-DETAILS (section of the NRCC-PRF-01-E)	
	☐ Prescriptive	NRCC-PLB-01-E	
	☐ NA		
Lighting (Indoor Conditioned)	☒ Performance	NRCC-PRF-LTI-DETAILS (section of the NRCC-PRF-01-E)	
	☐ Prescriptive	NRCC-LTI-01 / 02 / 03 / 04 / 05-E	
	☐ NA		
Covered Process: Commercial Kitchens	☐ Performance	S2 (section of the NRCC-PRF-01-E)	
	☐ Prescriptive	NRCC-PRC-01/ 03-E	
	☒ NA		
Covered Process: Computer Rooms	☐ Performance	S3 (section of the NRCC-PRF-01-E)	
	☐ Prescriptive	NRCC-PRC-01/ 04-E	
	☒ NA		
Covered Process: Laboratory Exhaust	☐ Performance	S4 (section of the NRCC-PRF-01-E)	
	☐ Prescriptive	NRCC-PRC-01/ 09-E	
	☒ NA		

Project Name:	Freedom High School	NRCC-PRF-01-E	Page 4 of 20
Project Address:	1050 Neroly Road Oakley 94561	Calculation Date/Time:	14:29, Fri, Jul 19, 2019
Compliance Scope:	NewComplete	Input File Name:	Freedom HS_constructionLab.cibd16x

G. COMPLIANCE PATH & CERTIFICATE OF COMPLIANCE SUMMARY

The following building components are only eligible for prescriptive compliance. Indicate which are relevant to the project.				*The following building components may have mandatory requirements per Part 6. Indicate which are relevant to the project.*			
Yes	NA	Prescriptive Requirement	Compliance Forms	Yes	NA	Mandatory Requirement	Compliance Forms
☐	☒	Lighting (Indoor Unconditioned) §140.6	NRCC-LTI-01 / 02 / 03 / 04 / 05-E	☐	☒	Commissioning: §120.8 Simple Systems	NRCC-CXR-01 / 02 / 03 / 05-E
				☐	☒	Complex Systems	NRCC-CXR-01 / 02 / 04 / 05-E
☐	☒	Lighting (Outdoor) §140.7	NRCC-LTO-01 / 02 / 03-E	☐	☒	Electrical: §130.5	NRCC-ELC-01-E
☐	☒	Lighting (Sign) §140.8	NRCC-LTS-01-E	☐	☒	Solar Ready: §110.10	NRCC-SRA-01 / 02-E
☐	☒	Solar Thermal Water Heating: §140.5	NRCC-STH-01-E	☐	☒	Covered Process: §120.6 Parking Garage	NRCC-PRC-01-E
				☐	☒	Commercial Refrigeration	NRCC-PRC-02-E
				☐	☒	Warehouse Refrigeration	NRCC-PRC-05-E
				☐	☒	Compressed Air	NRCC-PRC-06/07/08-E
				☐	☒	Process Boilers	NRCC-PRC-10-E
							NRCC-PRC-11-E

Project Name:	Freedom High School	NRCC-PRF-01-E	Page 5 of 20
Project Address:	1050 Neroly Road Oakley 94561	Calculation Date/Time:	14:29, Fri, Jul 19, 2019
Compliance Scope:	NewComplete	Input File Name:	Freedom HS_constructionLab.cibd16x

H. CERTIFICATE OF INSTALLATION, CERTIFICATE OF ACCEPTANCE & CERTIFICATE OF VERIFICATION SUMMARY (NRCI/NRCA/NRCV) – Documentation Author to indicate which Certificates must be submitted for the features to be recognized for compliance (Retain copies and verify forms are completed and signed to post in field for Field Inspector to verify). See Tables G. and H. in MCH and LTI Details Sections for Acceptance Tests and forms by equipment.

Confirmed

Building Component	Compliance Forms *(required for submittal)*	Pass	Fail
Envelope	☒ NRCI-ENV-01-E - For all buildings	☐	☐
	☒ NRCA-ENV-02-F- NFRC label verification for fenestration	☐	☐
Mechanical	☒ NRCI-MCH-01-E - For all buildings with Mechanical Systems	☐	☐
	☒ NRCA-MCH-02-A- Outdoor Air	☐	☐
	☒ NRCA-MCH-03-A – Constant Volume Single Zone HVAC	☐	☐
	☐ NRCA-MCH-04-H- Air Distribution Duct Leakage	☐	☐
	☒ NRCA-MCH-05-A- Air Economizer Controls	☐	☐
	☐ NRCA-MCH-06-A- Demand Control Ventilation	☐	☐
	☐ NRCA-MCH-07-A – Supply Fan Variable Flow Controls	☐	☐
	☐ NRCA-MCH-08-A- Valve Leakage Test	☐	☐
	☐ NRCA-MCH-09-A – Supply Water Temp Reset Controls	☐	☐
	☐ NRCA-MCH-10-A- Hydronic System Variable Flow Controls	☐	☐
	☐ NRCA-MCH-11-A – Auto Demand Shed Controls	☐	☐
	☐ NRCA-MCH-12-A- Packaged Direct Expansion Units	☐	☐
	☐ NRCA-MCH-13-A- Air Handling Units and Zone Terminal Units	☐	☐
	☐ NRCA-MCH-14-A- Distributed Energy Storage	☐	☐
	☐ NRCA-MCH-15-A – Thermal Energy Storage	☐	☐
	☐ NRCA-MCH-16-A- Supply Air Temp Reset Controls	☐	☐
	☐ NRCA-MCH-17-A – Condensate Water Temp Reset Controls	☐	☐
	☐ NRCA-MCH-18-A- Energy Management Controls Systems	☐	☐
	☐ NRCV-MCH-04-H- Duct Leakage Test	☐	☐

Project Name:	Freedom High School	NRCC-PRF-01-E	Page 6 of 20
Project Address:	1050 Neroly Road Oakley 94561	Calculation Date/Time:	14:29, Fri, Jul 19, 2019
Compliance Scope:	NewComplete	Input File Name:	Freedom HS_constructionLab.cibd16x

H. CERTIFICATE OF INSTALLATION, CERTIFICATE OF ACCEPTANCE & CERTIFICATE OF VERIFICATION SUMMARY (NRCI/NRCA/NRCV) – Documentation Author to indicate which Certificates must be submitted for the features to be recognized for compliance (Retain copies and verify forms are completed and signed to post in field for Field Inspector to verify). See Tables G. and H. in MCH and LTI Details Sections for Acceptance Tests and forms by equipment.

Confirmed

Building Component	Compliance Forms *(required for submittal)*	Pass	Fail
Plumbing	☒ NRCI-PLB-01-E - For all buildings with Plumbing System	☐	☐
	☐ NRCI-PLB-02-E - required on central systems in high-rise residential, hotel/motel application.	☐	☐
	☐ NRCI-PLB-03-E - Single dwelling unit systems in high-rise residential, hotel/motel application.	☐	☐
	☐ NRCI-PLB-21-E - HERS verified central systems in high-rise residential, hotel/motel application.	☐	☐
	☐ NRCI-PLB-22-E - HERS verified single dwelling unit systems in high-rise residential, hotel/motel application.	☐	☐
	☐ NRCV-PLB-21-H- HERS verified central systems in high-rise residential, hotel/motel application.	☐	☐
	☐ NRCV-PLB-22-H - HERS verified single dwelling unit systems in high-rise residential, hotel/motel application.	☐	☐
	☐ NRCI-STH-01-E - Any solar water heating	☐	☐
Indoor Lighting	☒ NRCI-LTI-01-E - For all buildings	☐	☐
	☐ NRCI-LTI-02-E - Lighting control system, or for an Energy Management Control System (EMCS)	☐	☐
	☐ NRCI-LTI-03-E - Line-voltage track lighting integral current limiter, or for a supplementary overcurrent protection panel used to energize only line-voltage track lighting	☐	☐
	☐ NRCI-LTI-04-E - Two interlocked systems serving an auditorium, a convention center, a conference room, or a theater	☐	☐
	☐ NRCI-LTI-05-E - Lighting Control Credit Power Adjustment Factor (PAF)	☐	☐
	☐ NRCI-LTI-06-E - Additional wattage installed in a video conferencing studio	☐	☐
	☒ NRCA-LTI-02-A - Occupancy sensors and automatic time switch controls.	☐	☐
	☒ NRCA-LTI-03-A - Automatic daylighting controls	☐	☐
	☐ NRCA-LTI-04-A - Demand responsive lighting controls	☐	☐
Outdoor Lighting	☐ NRCI-LTO-01-E – Outdoor Lighting	☐	☐
	☐ NRCI-LTO-02-E- EMCS Lighting Control System	☐	☐
	☐ NRCA-LTO-02-A - Outdoor Lighting Control	☐	☐
Sign Lighting	☐ NRCI-LTS-01-E – Sign Lighting	☐	☐
Electrical	☐ NRCI-ELC-01-E - Electrical Power Distribution	☐	☐
Photovoltaic	☐ NRCI-SPV-01-E Photovoltaic Systems	☐	☐

Project Name:	Freedom High School	NRCC-PRF-01-E	Page 7 of 20
Project Address:	1050 Neroly Road Oakley 94561	Calculation Date/Time:	14:29, Fri, Jul 19, 2019
Compliance Scope:	NewComplete	Input File Name:	Freedom HS_constructionLab.cibd16x

H. CERTIFICATE OF INSTALLATION, CERTIFICATE OF ACCEPTANCE & CERTIFICATE OF VERIFICATION SUMMARY (NRCI/NRCA/NRCV) – Documentation Author to indicate which Certificates must be submitted for the features to be recognized for compliance (Retain copies and verify forms are completed and signed to post in field for Field Inspector to verify). See Tables G. and H. in MCH and LTI Details Sections for Acceptance Tests and forms by equipment.

Confirmed

Building Component	Compliance Forms *(required for submittal)*	Pass	Fail
Covered Process	☐ NRCI-PRC-01-E Covered Processes	☐	☐
	☐ NRCA-PRC-01-F- Compressed Air Systems	☐	☐
	☐ NRCA-PRC-02-F- Kitchen Exhaust	☐	☐
	☐ NRCA-PRC-03-F- Garage Exhaust	☐	☐
	☐ NRCA-PRC-04-F- Refrigerated Warehouse- Evaporator Fan Motor Controls	☐	☐
	☐ NRCA-PRC-05-F- Refrigerated Warehouse- Evaporative Condenser Controls	☐	☐
	☐ NRCA-PRC-06-F- Refrigerated Warehouse- Air Cooled Condenser Controls	☐	☐
	☐ NRCA-PRC-07F- Refrigerated Warehouse- Variable Speed Compressor	☐	☐
	☐ NRCA-PRC-08-F- Electrical Resistance Underslab Heating System	☐	☐

I. ENVELOPE GENERAL INFORMATION (See NRCC-PRF-ENV-DETAILS for more information)

						Confirmed	
1.	Total Conditioned Floor Area	3,529 ft²	5.	Number of Floors Above Grade	1	Pass	Fail
2.	Total Unconditioned Floor Area	0 ft²	6.	Number of Floors Below Grade	0		
3.	Addition Conditioned Floor Area	0 ft²					
4.	Addition Unconditioned Floor Area	0 ft²					

7. Opaque Surfaces & Orientation	8. Total Gross Surface Area	9. Total Fenestration Area	10. Window to Wall Ratio	Pass	Fail
North Wall	642 ft²	0 ft²	00.0%	☐	☐
East Wall	1,463 ft²	0 ft²	00.0%	☐	☐
South Wall	642 ft²	30 ft²	04.7%	☐	☐
West Wall	1,350 ft²	388 ft²	28.8%	☐	☐
Total	**4,098 ft²**	**418 ft²**	**10.2%**	☐	☐
Roof	3,529 ft²	0 ft²	00.0%	☐	☐

Project Name:	Freedom High School	NRCC-PRF-01-E	Page 8 of 20
Project Address:	1050 Neroly Road Oakley 94561	Calculation Date/Time:	14:29, Fri, Jul 19, 2019
Compliance Scope:	NewComplete	Input File Name:	Freedom HS_constructionLab.cibd16x

J. FENESTRATION ASSEMBLY SUMMARY — § 110.6 — **Confirmed**

1. Fenestration Assembly Name / Tag or I.D.	2. Fenestration Type / Product Type / Frame Type	3. Certification Method[1]	4. Assembly Method	5. Area ft²	6. Overall U-factor	7. Overall SHGC	8. Overall VT	9. Status[2]	Pass	Fail
PPG SOLARBAN 70 XL Clear	VerticalFenestration FixedWindow N/A	NFRC Rated	SiteBuilt	418	0.57	0.40	0.64	N	☐	☐

[1] *Newly installed fenestration shall have a certified NFRC Label Certificate or use the CEC default tables found in Table 110.6-A and Table 110.6-B. Center of Glass (COG) values are for the glass only, determined by the manufacturer, and are shown for ease of verification. Site-built fenestration values are calculated per Nonresidential Appendix NA6 and are used in the analysis.*
[2] *Status: N - New; A – Altered; E – Existing*

Taking compliance credit for fenestration shading devices? (if "Yes", see NRCC-PRF-ENV-DETAILS for more information) — No

K. OPAQUE SURFACE ASSEMBLY SUMMARY — § 120.7/ § 140.3 — **Confirmed**

1. Surface Name	2. Surface Type	3. Area (ft²)	4. Framing Type	5. Cavity R-Value	6. Continuous R-Value	7. U-Factor / F-Factor / C-Factor	8. Status[1]	Pass	Fail
Slab On Grade7	UndergroundFloor	3529	NA	0	NA	F-Factor: 0.730	N	☐	☐
Bld B R-30 Roof Build Up9	Roof	3529	Wood	0	30	U-Factor: 0.030	N	☐	☐
2x6 WF Wall with R21 Batt11	ExteriorWall	4098	Wood	21	NA	U-Factor: 0.065	N	☐	☐
R-21 Wall20	InteriorWall	1264	Metal	21	NA	U-Factor: 0.140	N	☐	☐

[1] *Status: N - New; A – Altered; E – Existing*

L. ROOFING PRODUCT SUMMARY — § 140.3 — **Confirmed**

1. Product Type	2. Product Density (lb/ft²)	3. Aged Solar Reflectance	4. Thermal Emittance	5. SRI	6. Cool Roof Credit	7. Roofing Product Description	Pass	Fail
Bld B R-30 Roof Build Up9	5.116	0.08	0.75	NA	No	NA	☐	☐

M. HVAC SYSTEM SUMMARY (see NRCC-PRF-MCH-DETAILS for more information) — **§ 110.1 / § 110.2**

Dry System Equipment [1] (Fan & Economizer info included below in Table N) — Confirmed: Pass / Fail

1. Equip Name	2. Equip Type	3. System Type (Simple [2] or Complex [3])	4. Qty	5. Total Heating Output (kBtu/h)	6. Supp Heat Source (Y/N)	7. Supp Heat Output (kBtuh)	8. Total Cooling Output (kBtu/h)	9. Efficiency: Cooling	9. Efficiency: Heating	10. Acceptance Testing Required? (Y/N) [4]	11. Status[5]	Pass	Fail
F-1/CU-1	SZAC (Packaged1Phase)	Simple	1	80	No	0	49	SEER-17.000 / EER-13.000	AFUE-96.0	Yes	N	☐	☐
UH 1 and 2	SZAC (Packaged1Phase)	Simple	2	60	No	0	0	SEER-17.000 / EER-13.000	AFUE-96.0	Yes	N	☐	☐

[1] *Dry System Equipment includes furnaces, air handling units, heat pumps, etc.*
[2] *Simple Systems must complete NRCC-CXR-03-E commissioning design review form*
[3] *Complex Systems must complete NRCC-CXR-04-E commissioning design review form*
[4] *A summary of which acceptance tests are applicable is provided in NRCC-PRF-MCH-DETAILS*
[5] *Status: N - New, A – Altered, E – Existing*

Wet System Equipment [1] / *Pumps* — Confirmed: Pass / Fail

12. Equip Name	13. Equip Type	14. Qty	15. Vol (gal)	16. Rated Capacity (kBtu/h)	17. Efficiency	18. Standby Loss	19. Tank Ext. R Value	20. Qty	21. GPM	22. HP	23. VSD (Y/N)	24. Status[2]	Pass	Fail
EWH Chronomite CMT-2.52	Storage	1	2.50	5	EF: 0.95	SBLF: NA	NA		NA		No	N	☐	☐

[1] *Wet System Equipment includes boilers, chillers, cooling towers, water heaters, etc.*
[2] *Status: N - New, A – Altered, E – Existing*

Discrepancy between modeled and designed equipment sizing? (if "Yes", see Table F. "Additional Remarks" for an explanation) — No

N. ECONOMIZER & FAN SYSTEMS SUMMARY[1] — **§ 140.4** — Confirmed: Pass / Fail

1. Equip Name	2. Outside Air CFM	3. Supply Fan CFM	3. Supply Fan HP	3. Supply Fan BHP	3. Supply Fan TSP (inch WC)	3. Supply Fan Control	4. Return Fan CFM	4. Return Fan HP	4. Return Fan BHP	4. Return Fan TSP (inch WC)	4. Return Fan Control	5. Economizer Type (if present)	Pass	Fail
F-1/CU-1	521	1600	1.000	1.000	1.98	ConstantVolume	NA	NA	NA	NA	NA	DifferentialDryBulb	☐	☐
UH 1 and 2	391	769	0.060	0.060	0.25	ConstantVolume	NA	NA	NA	NA	NA	DifferentialDryBulb	☐	☐

[1] *Mechanical ventilation calculations and exhaust fans are included in the NRCC-PRF-MCH-DETAILS section*

O. EQUIPMENT CONTROLS — **§ 120.2** — Confirmed: Pass / Fail

1. Equip Name	2. Equip Type	3. Controls	Pass	Fail
F-1/CU-1	SZAC	No DCV Controls Differential Drybulb Economizer No Supply Air Temp. Control No Optimum Start No Evaporative Cooler No Heat Recovery	☐	☐
UH 1 and 2	SZAC	No DCV Controls Differential Drybulb Economizer No Supply Air Temp. Control No Optimum Start No Evaporative Cooler No Heat Recovery	☐	☐
EWH 51 - SHW	Service Hot Water, Primary Only	Fixed Temperature Control, No DDC No Heat Recovery	☐	☐

R. INDOOR CONDITIONED LIGHTING SCHEDULE (Adapted from NRCC-LTI-01-E)[1] — **§ 130.0**

Luminaire Schedule (includes all permanent installed lighting in conditioned space, and portable lighting over 0.3 w/ft² in offices) — Installed Watts (Conditioned) — Confirmed: Pass / Fail

Name or Item Tag	Complete Luminaire Description (i.e., 3-lamp fluorescent troffer, F32T8, one dimmable electronic ballast)	Watts per luminaire	How Wattage is Determined: CEC Default from NA8	How Wattage is Determined: According to §130.0(c)	Total Number Luminaires	Installed Watts	Pass	Fail
C15	C15	41	No	Yes	1	41	☐	☐
C15A	C15A	81	No	Yes	19	1,539	☐	☐
C7	C7	30	No	Yes	2	60	☐	☐
C9	C9	55	No	Yes	12	661	☐	☐

[1] *If lighting power densities were used in the compliance model Building Departments will need to check prescriptive forms for Luminaire Schedule details.*

S1. COVERED PROCESS SUMMARY – ENCLOSED PARKING GARAGES — **§ 140.9**
This Section Does Not Apply

S2. COVERED PROCESS SUMMARY – COMMERCIAL KITCHENS — **§ 140.9**
This Section Does Not Apply

S3. COVERED PROCESS SUMMARY – COMPUTER ROOMS — **§ 140.9**
This Section Does Not Apply

S4. COVERED PROCESS SUMMARY – LABORATORY EXHAUSTS — **§ 140.9**
This Section Does Not Apply

T. UNMET LOAD HOURS
This Section Does Not Apply

U. ENERGY USE SUMMARY

Energy Component	Standard Design Site (MWh)	Proposed Design Site (MWh)	Margin (MWh)	Standard Design Site (MBtu)	Proposed Design Site (MBtu)	Margin (MBtu)
Space Heating	--	0.0	--	33.2	45.7	-12.5
Space Cooling	5.5	4.5	1.0	--	--	--
Indoor Fans	14.0	4.2	9.8	--	--	--
Heat Rejection	--	--	--	--	--	--
Pumps & Misc.	--	--	--	--	--	--
Domestic Hot Water	--	4.7	--	24.2	--	--
Indoor Lighting	8.5	4.7	3.8	--	--	--
COMPLIANCE TOTAL	**28.0**	**18.1**	**9.9**	**57.4**	**45.7**	**11.7**
Receptacle	9.8	9.8	0.0	--	--	--
Process	--	--	--	--	--	--
Other Ltg	--	--	--	--	--	--
Process Motors	--	--	--	--	--	--
TOTAL	**37.8**	**27.9**	**9.9**	**57.4**	**45.7**	**11.7**

DOCUMENTATION AUTHOR'S DECLARATION STATEMENT — **§ 10-103**

I certify that this Certificate of Compliance documentation is accurate and complete.

Documentation Author Name: Matthew Hargadon	Signature: Matt Hargadon
Company: Guttmann & Blaevoet Consulting Engineers	
Address: 2351 Powell Street	Signature Date: 7/19/2019
City/State/Zip: San Francisco CA 94133	CEA Identification (if applicable):
Phone: (415) 655-4000	

RESPONSIBLE PERSON'S DECLARATION STATEMENT

I certify the following under penalty of perjury, under the laws of the State of California:

1. I hereby affirm that I am eligible under the provisions of Division 3 of the Business and Professions Code to sign this document as the person responsible for its preparation; and that I am licensed in the State of California as a civil engineer, mechanical engineer, electrical engineer, or I am a licensed architect.
2. I affirm that I am eligible under the provisions of Division 3 of the Business and Professions Code by section 5537.2 or 6737.3 to sign this document as the person responsible for its preparation; and that I am a licensed contractor performing this work.
3. I affirm that I am eligible under Division 3 of the Business and Professions Code to sign this document because it pertains to a structure or type of work described as exempt pursuant to Business and Professions Code Sections 5537, 5538 and 6737.1.

Responsible Envelope Designer Name:	Signature:
Company: Quattrocchi Kwok Architects	
Address: 636 5th Street	Date Signed: 8/1/19
City/State/Zip: Santa Rosa CA 95404	Declaration Statement Type: 1
Phone: 707-576-0829	Title: Principal License #: C22643
Responsible Lighting Designer Name: Pieter Colenbrander	Signature:
Company: O'Mahony & Myer	
Address: 4340 Redwood Hwt, Suite 245	Date Signed: 8/1/19
City/State/Zip: San Rafael CA 94903	Declaration Statement Type: 1
Phone: (415) 492-0420	Title: Principal License #: E14738
Responsible Mechanical Designer Name: Chris Del Core	Signature:
Company: Costa Engineers inc.	
Address: 3274 Villa Lane	Date Signed: 8-1-19
City/State/Zip: Napa CA 94558	Declaration Statement Type: 1
Phone: (707) 252-9177	Title: Principal License #: M31600

NRCC-PRF-ENV-DETAILS -SECTION START-

A. OPAQUE SURFACE ASSEMBLY DETAILS — Confirmed: Pass / Fail

1. Surface Name	2. Surface Type	3. Description of Assembly Layers	4. Notes	Pass	Fail
Slab On Grade7	UndergroundFloor	Slab Type = UnheatedSlabOnGrade Insulation Orientation = None Insulation R-Value = R0		☐	☐
Bld B R-30 Roof Build Up9	Roof	Built-up roofing - 3/8 in. Plywood - 1/2 in. Compliance Insulation R30.00 Plywood - 1/2 in. Wood framed roof, 24in. OC, 11.25in., R-0		☐	☐
2x6 WF Wall with R21 Batt11	ExteriorWall	Stucco - 7/8 in. Vapor permeable felt - 1/8 in. Plywood - 1/2 in. Wood framed wall, 16in. OC, 5.5in., R-21 Gypsum Board - 5/8 in.		☐	☐
R-21 Wall20	InteriorWall	Gypsum Board - 5/8 in. Metal framed wall, 24in. OC, 5.5in., R-21 Gypsum Board - 5/8 in.		☐	☐

B. OVERHANG DETAILS (Adapted from NRCC-ENV-02-E)
This Section Does Not Apply

C. OPAQUE DOOR SUMMARY — Confirmed: Pass / Fail

1. Opaque Door Assembly Name / Tag or I.D.	2. Door Type	3. Certification Method	4. Operation	5. Area	6. Overall U-factor	7. Status[1]	Pass	Fail
STD_DOOR13	MetalInsulatedSwingingDoor	DefaultPerformance	NonSwinging	106	0.102	N	☐	☐

[1] *Status: N - New, A – Altered, E – Existing*

NRCC-PRF-MCH-DETAILS -SECTION START-

A. MECHANICAL VENTILATION AND REHEAT *(Adapted from 2016-NRCC-MCH-03-E)* — Confirmed: Pass / Fail

1. DESIGN AIR FLOWS | 2. VENTILATION (§ 120.1)

CONDITIONED ZONE NAME	HEATING/COOLING SYSTEM ID	DESIGN PRIMARY AIR FLOW (CFM)	DESIGN PRIMARY MINIMUM AIR FLOW (CFM)	MINIMUM PRIMARY AIR FLOW FRACTION	MAXIMUM HEATING AIR FLOW (CFM)	MAXIMUM HEATING AIR FLOW FRACTION	DDC CONTROL (Y/N)	VENT SYSTEM ID	CONDITIONED AREA (ft2)	MIN. VENT RTE PER AREA (CFM/ft2)	MIN. VENT RTE PER PERSON (CFM/person)	DESIGN NUM. OF PEOPLE	REQ'D VENT AIR FLOW (CFM)	DESIGN VENT AIR FLOW (CFM)	TRANSFER AIRFLOW (CFM)	DCV (Y/N)	Operable Window Interlock § 140.4(e) (Y/N)	Pass	Fail
1-Equipment Area	F-1/CU-1	1,500	NA	0.00	NA	NA	N	F-1/CU-1	1,353	0.37	33.83	15.00	507	507	NA	N	NA	☐	☐
2-Elec. Mech.	F-1/CU-1	100	NA	0.00	NA	NA	N	F-1/CU-1	90	0.15	0.13	100.00	13	13	NA	N	NA	☐	☐
3-Construction Lab	UH 1 and 2	1,538	NA	0.00	NA	NA	N	UH 1 and 2	2,086	0.38	52.15	15.00	782	782	NA	N	NA	☐	☐
								TOTAL	3,529		86.11		1,302	1,302	NA			☐	☐

B. ZONAL SYSTEM AND TERMINAL UNIT SUMMARY — **§ 140.4** — Confirmed: Pass / Fail

1. System ID	2. System Type	3. Qty	4. Rated Capacity (kBtuh): Heating	4. Rated Capacity (kBtuh): Cooling	5. Economizer	6. Zone Name	7. Airflow (cfm): Design	7. Airflow (cfm): Min.	7. Airflow (cfm): Min. Ratio	8. Fan: BHP	8. Fan: Cycles	8. Fan: ECM Motor	Pass	Fail
2-Elec. Mech.-Trm	Uncontrolled	1	NA	NA	NA	2-Elec. Mech.	100	NA	0.00	NA	NA	☐	☐	☐
1-Equipment Area-Trm	Uncontrolled	1	NA	NA	NA	1-Equipment Area	1500	NA	0.00	NA	NA	☐	☐	☐
3-Construction Lab-Trm	Uncontrolled	2	NA	NA	NA	3-Construction Lab	1538	NA	0.00	NA	NA	☐	☐	☐

C. EXHAUST FAN SUMMARY
This Section Does Not Apply

D. DHW EQUIPMENT SUMMARY – *(Adapted from NRCC-PLB-01)* — **§ 110.3** — Confirmed: Pass / Fail

1. DHW Name	2. Heater Element Type	3. Tank Type	4. Qty	5. Tank Vol (gal)	6. Rated Input (kBtu/h)	7. Efficiency	8. Tank Insulation R-value (Int/Ext)	9. Standby Loss Fraction	10. Heat Pump Type	11. Tank Location or Ambient Condition	Pass	Fail
EWH Chronomite CMT-2.52	Electricity	Storage	1	2.50	5	EF: 0.95	NA	SBLF: NA	NA	NA	☐	☐

E. MULTI-FAMILY CENTRAL DHW SYSTEM DETAILS
This Section Does Not Apply

F. SOLAR HOT WATER HEATING SUMMARY (Adapted from NRCC-STH-01)
This Section Does Not Apply

G. MECHANICAL HVAC ACCEPTANCE TESTS & FORMS *(Adapted from 2016-NRCC-MCH-01-E)* — **§ RA4**

Declaration of Required Acceptance Certificates (NRCA) – Acceptance Certificates that may be submitted. (Retain copies and verify forms are completed and signed to post in field for Field Inspector to verify).

Test Description	MCH-02A	MCH-03A	MCH-04A	MCH-05A	MCH-06A	MCH-07A	MCH-08A	MCH-09A	MCH-10A	MCH-11A	MCH-12A	MCH-13A	MCH-14A	MCH-15A	MCH-16A	MCH-17A	MCH-18A	Confirmed: Pass	Fail
Equipment Requiring Testing or Verification	Outdoor Air	Single Zone Unitary	Air Dist. Ducts	Economizer Controls	DCV	Supply Fan VAV	Valve Leakage	Supply Water Temp. Reset	Hyd. Variable Flow Control	Auto Demand Shed Control	FDD for DX Units	Auto FDD for Air & Zone	Dist. Energy Storage DX AC	TES Systems	Supply Air Temp. Reset	Condenser Water Reset Control	ECMS		
EWH 51 - SHW	1	--	--	--	--	--	--	--	--	--	--	--	--	--	--	--	--	☐	☐
F-1/CU-1	1	X	X	--	X	--	--	--	--	--	--	--	--	--	--	--	--	☐	☐
UH 1 and 2	2	X	X	--	X	--	--	--	--	--	--	--	--	--	--	--	--	☐	☐

H. EVAPORATIVE COOLER SUMMARY
This Section Does Not Apply

NRCC-PRF-LTI-DETAILS -SECTION START-

A. INDOOR CONDITIONED LIGHTING CONTROL CREDITS (Adapted from NRCC-LTI-02-E) — **§ 140.6**
This Section Does Not Apply

B. INDOOR CONDITIONED LIGHTING MANDATORY LIGHTING CONTROLS (Adapted from NRCC-LTI-02-E) — **§ 130.1**
This Section Does Not Apply
§130.1(a) = Manual area controls; §130.0(b) = Multi Level; §130.1(c) = Auto Shut-Off; §130.1(d) = Mandatory Daylight; §130.1(e) = Demand Responsive

C. TAILORED METHOD CONDITIONED LIGHTING POWER ALLOWANCE SUMMARY AND CHECKLIST (Adapted from NRCC-LTI-04-E) — **§ 140.6**

General lighting power (see Table D)	0
General lighting power from special function areas (see Table E)	NA
Additional "use it or lose it" (See Table G)	0
Total watts	0

D. GENERAL LIGHTING POWER (Adapted from NRCC-LTI-04-E) — **§ 140.6-D**
This Section Does Not Apply

E. GENERAL LIGHTING FROM SPECIAL FUNCTION AREAS (Adapted from NRCC-LTI-04-E) — **§ 140.6(c) 3H**

Room Number	Primary Function Area	Illuminance Value (LUX)	Room Cavity Ratio (Table G)	Allowed LPD	Floor Area (ft²)	Allowed Watts	Confirmed: Pass	Confirmed: Fail
NA	NA	NA	NA	NA	NA	NA	☐	☐

Note: Tailored Method for Special Function Areas is not currently implemented

F. ROOM CAVITY RATIO (Adapted from NRCC-LTI-04-E)

Rectangular Spaces — Confirmed: Pass / Fail

Room Number	Task/Activity Description	Room Length (ft)	Room Width (ft)	Room Cavity Height (ft)	RCR	Pass	Fail
NA	NA	NA	NA	NA	NA	☐	☐

QUATTROCCHI KWOK ARCHITECTS
Main Office:
636 Fifth Street, Santa Rosa, CA 95404
Pleasanton Office:
600 Main Street, Suite E,
Pleasanton, CA 94566
(707) 576-0829

LICENSED ARCHITECT
JIM THEISS
LICENSE # C22643
EXP JUNE 30, 2021
STATE OF CALIFORNIA

SIGNED: AUGUST 13, 2019

FREEDOM HIGH SCHOOL

PERFORMING ARTS AND CTE FACILITIES

1050 NEROLY RD,
OAKLEY, CA 94561

LIBERTY UNION HIGH SCHOOL DISTRICT

ARCH PROJECT NO: 1739.00
DRAWN BY:
DRAWING SCALE:
PTN: 61721-0068

BID SET

AUGUST 13, 2019

SHEET TITLE

TITLE 24 BLDG B

SHEET NUMBER

T-12

BIM Server: BIMCLOUD-QKA - BIMcloud/1739.00 - Freedom High School/1739.00 FREEDOM HS Performing Arts Center.8/6/2019 5:16 PM

Project Name:	Freedom High School	NRCC-PRF-01-E	Page 19 of 20
Project Address:	1050 Neroly Road Oakley 94561	Calculation Date/Time:	14:29, Fri, Jul 19, 2019
Compliance Scope:	NewComplete	Input File Name:	Freedom HS_constructionLab.cibd16x

Non-Rectangular Spaces

This Section Does Not Apply

Note: All applicable spaces are listed under the Non-Rectangular Spaces table

G. ADDITIONAL "USE IT OR LOSE IT" (Adapted from NRCC-LTI-04-E)

1. Wall Display	2. Combined Floor Display and Task Lighting	3. Combined Ornamental and Special Effects Lighting	4. Very Valuable Merchandise	Allowed Watts	Confirmed Pass	Confirmed Fail
0	0	0	0	**0**	☐	☐

5. Wall Display

This Section Does Not Apply

6. Floor Display and Task Lighting

This Section Does Not Apply

7. Combined Ornamental and Special Effects Lighting

This Section Does Not Apply

8. Very Valuable Merchandise

This Section Does Not Apply

H. INDOOR & OUTDOOR LIGHTING ACCEPTANCE TESTS & FORMS (Adapted from NRCC-LTI-01-E and NRCC-LTO-01-E) **§ 130.4**

Declaration of Required Acceptance Certificates (NRCA) –Acceptance Certificates that must be verified in the field. Retain copies and verify forms are completed and signed to post in field for Field Inspector to verify).

Test Description		Indoor			Outdoor	Confirmed	
		NRCA-LTI-02-A	NRCA-LTI-03-A	NRCA-LTI-04-A	NRCA-LTO-02-A		
Equipment Requiring Testing or Verification	# of units	Occ Sensors / Auto Time Switch	Auto Daylight	Demand Responsive	Outdoor Controls	Pass	Fail
Occupant Sensors	0	☒	☐	☐	☐	☐	☐
Automatic Time Switch	0	☒	☐	☐	☐	☐	☐
Automatic Daylighting	0	☐	☒	☐	☐	☐	☐

Project Name:	Freedom High School	NRCC-PRF-01-E	Page 20 of 20
Project Address:	1050 Neroly Road Oakley 94561	Calculation Date/Time:	14:29, Fri, Jul 19, 2019
Compliance Scope:	NewComplete	Input File Name:	Freedom HS_constructionLab.cibd16x

H. INDOOR & OUTDOOR LIGHTING ACCEPTANCE TESTS & FORMS (Adapted from NRCC-LTI-01-E and NRCC-LTO-01-E) **§ 130.4**

Declaration of Required Acceptance Certificates (NRCA) –Acceptance Certificates that must be verified in the field. Retain copies and verify forms are completed and signed to post in field for Field Inspector to verify).

Test Description		Indoor			Outdoor	Confirmed	
		NRCA-LTI-02-A	NRCA-LTI-03-A	NRCA-LTI-04-A	NRCA-LTO-02-A		
Equipment Requiring Testing or Verification	# of units	Occ Sensors / Auto Time Switch	Auto Daylight	Demand Responsive	Outdoor Controls	Pass	Fail
Demand Responsive	0	☐	☐	☐	☐	☐	☐
Outdoor Controls	0	☐	☐	☐	☐	☐	☐

CA Building Energy Efficiency Standards- 2016 Nonresidential Compliance Report Version: NRCC-PRF-01-E-06262019-5583 Report Generated at: 2019-07-19 14:29:45

ENVELOPE MANDATORY MEASURES: NONRESIDENTIAL **ENV-MM**

Project Name: *Freedom High School - Building B* Date: *7/19/2019*

DESCRIPTION

Building Envelope Measures:

§110.8(a):	Installed insulating material shall have been certified by the manufacturer to comply with the California Quality Standards for insulating material, Title 20 Chapter 4, Article 3.
§110.8(c):	All Insulating Materials shall be installed in compliance with the flame spread rating and smoke density requirements of Sections 2602 and 707 of Title 24, Part 2.
§110.8(g):	Heated slab floors shall be insulated according to the requirements in Table 110.8-A.
§110.7(a):	All Exterior Joints and openings in the building that are observable sources of air leakage shall be caulked, gasketed, weatherstripped or otherwise sealed.
§110.6(a):	Manufactured fenestration products and exterior doors shall have air infiltration rates not exceeding 0.3 cfm/ft.² of window area, 0.3 cfm/ft.² of door area for residential doors, 0.3 cfm/ft.² of door area for nonresidential single doors (swinging and sliding), and 1.0 cfm/ft.² for nonresidential double doors (swinging).
§110.6(a):	Fenestration U-factor shall be rated in accordance with NFRC 100, or the applicable default U-factor.
§110.6(a) :	Fenestration SHGC shall be rated in accordance with NFRC 200, or NFRC 100 for site-built fenestration, or the applicable default SHGC.
§110.6(b):	Site Constructed Doors, Windows and Skylights shall be caulked between the unit and the building, and shall be weatherstripped (except for unframed glass doors and fire doors).
§120.7(a):	The opaque portions of the roof/ceiling that separates conditioned spaces from unconditioned spaces or ambient air shall meet the applicable U-Factor requirements as follows: **Metal Building-** The weighted average U-factor of the roof assembly shall not exceed 0.098. **Wood Framed and Others-** The weighted average U-factor of the roof assembly shall not exceed 0.075.
§120.7(b):	The opaque portions of walls that separate conditioned spaces from unconditioned spaces or ambient air shall meet the applicable U-factor as follows: **Metal Building-** The weighted average U-factor of the wall assembly shall not exceed 0.113. **Metal Framed-** The weighted average U-factor of the wall assembly shall not exceed 0.151. **Light Mass Walls-** A 6 inch or greater Hollow Core Concrete Masonry Unit shall have a U-factor not to exceed 0.440. **Heavy Mass Walls-** An 8 inch or greater Hollow Core Concrete Masonry Unit shall have a U-factor not to exceed 0.690. **Wood Framed and Others-** The weighted average U-factor of the wall assembly shall not exceed 0.110. **Spandrel Panels and Opaque Curtain Wall-** The weighted average U-factor of the spandrel panels and opaque curtain wall assembly shall not exceed 0.280. **Demising Walls-** The opaque portions of framed demising walls shall meet the requirements of Item A or B below: A. Wood framed walls shall be insulated to meet a U-factor not greater than 0.099. B. Metal Framed walls shall be insulated to meet a U-factor not greater than 0.151.
§120.7(c):	The opaque portions of floors and soffits that separate conditioned spaces from unconditioned spaces or ambient air shall meet the applicable U-Factor requirements as follows: **Raised Mass Floors-** Shall have a minimum of 3 inches of lightweight concrete over a metal deck or the weighted average U-factor of the floor assembly shall not exceed 0.269. **Other Floors-**The weighted average U-factor of the floor assembly shall not exceed 0.071.

QUATTROCCHI KWOK ARCHITECTS

Main Office:
636 Fifth Street, Santa Rosa, CA 95404
Pleasanton Office:
600 Main Street, Suite E,
Pleasanton, CA 94566
(707) 576-0829

LICENSED ARCHITECT
JIM THEISS
LICENSE # C22643
EXP JUNE 30, 2021
STATE OF CALIFORNIA

SIGNED: AUGUST 13, 2019

STATE OF CALIFORNIA
OUTDOOR LIGHTING
CEC-NRCC-LTO-01-E (Revised 06/16) CALIFORNIA ENERGY COMMISSION

CERTIFICATE OF COMPLIANCE	NRCC-LTO-01-E
Outdoor Lighting	(Page 1 of 4)
Project Name: Freedom High School - Building B	Date Prepared: 7/19/2019

A. General Information

Project Address:	1050 Neroly Road Oakley, CA 94561	Total Illuminated Hardscape Area: 0
Phase of Construction:	☑ New Construction ☐ Addition ☐ Alteration	
Outdoor Lighting Zone (LZ)	☐ LZ-1 ☐ LZ-2 ☑ LZ-3 ☐ LZ-4	

I have confirmed with the AHJ which LZ applies to this site. For default lighting zone designations, see Title 24 Part 6, §10-114

B. Lighting Compliance Documents (check box for each document included)

For detailed instructions on the use of this and all Energy Efficiency Standards compliance documents, refer to the Nonresidential Manual published by the California Energy Commission.

☑	NRCC-LTO-01-E	Certificate of Compliance
☑	NRCC-LTO-02-E	Outdoor Lighting Controls Certificate of Compliance
☑	NRCQAA-0X2_BuildingB_C-LTO-03	Outdoor Lighting Power Allowance Certificate of Compliance
☐	NRCC-LTO-04-E	Outdoor Lighting Existing Conditions Certificate of Compliance

C. Summary of Allowed Outdoor Lighting Power

		Watts
01	**Sum Total ALLOWED** Outdoor Lighting Wattage from NRCC-LTO-03-E, page 1 Alterations with NO increase of connected lighting load may instead use the allowed wattage from NRCC-LTO-04, page 2.	377
	Complies ONLY if **Installed** (Box 02) ≤ **Allowed** (Box 01)	
02	**Sum Total INSTALLED** Outdoor Lighting Wattage from NRCC-LTO-01-E, page 3.	377

D. Declaration of Required Installation Certificates

Declare by checking all Installation Certificates that will be submitted. (Retain copies and verify compliance documents are completed and signed.)

☑ NRCI-LTO-01-E - Must be submitted for all buildings	☐ Field Inspector
☑ NRCI-LTO-02-E - Must be submitted for a lighting control system, or for an Energy Management Control System (EMCS), to be recognized for compliance.	☐ Field Inspector

E. Declaration of Required Certificates of Acceptance

Declare by checking all of the Certificates of Acceptance that will be submitted. (Retain copies and verify compliance documents are completed and signed.)

☑ NRCA-LTO-02-A - Must be submitted for outdoor lighting controls.	☐ Field Inspector

F. Schedule of Luminaires Exempt from the Outdoor Lighting Power Requirements in §140.7

01 Name or Symbol	02 Description of exempt luminaire in accordance with the exemptions

STATE OF CALIFORNIA
OUTDOOR LIGHTING
CEC-NRCC-LTO-01-E (Revised 06/16) CALIFORNIA ENERGY COMMISSION

CERTIFICATE OF COMPLIANCE	NRCC-LTO-01-E
Outdoor Lighting	(Page 2 of 4)
Project Name: Freedom High School - Building B	Date Prepared: 7/19/2019

G. Schedule of Luminaires Exempt from the Cutoff Requirements in §130.2(b)

01 Name or Symbol	02 Description of exempt luminaire in accordance with the exemptions

H. Schedule of Luminaires Exempt from the Outdoor Lighting Control Requirements in §130.2(c)

01 Name or Symbol	02 Description of exempt luminaire in accordance with the exemptions

STATE OF CALIFORNIA
OUTDOOR LIGHTING
CEC-NRCC-LTO-01-E (Revised 02/16) CALIFORNIA ENERGY COMMISSION

CERTIFICATE OF COMPLIANCE	NRCC-LTO-01-E
Outdoor Lighting	(Page 3 of 4)
Project Name: Freedom High School - Building B	Date Prepared: 7/19/2019

I. Outdoor Lighting Schedule and Field Inspection Energy Checklist

Luminaire Schedule		Installed Watts					Location	Cutoff	Field Inspector	
01	02	03	04		05	06	07	08	09	
Name or Item Tag	Complete Luminaire Description	Watts per Luminaire	How wattage was determined: CEC Default from NAB	How wattage was determined: According to §130.0(c)	Number of Luminaires	Total Installed Watts in this area (3 x 5)	Primary Function area in which the luminaires are installed (Outdoor Lighting Zone)	BUG Rating	Pass	Fail
C2B	C2B	13.7	☐	☑	3	41	Other Entrance/Exit	UH: n/a UL: n/a FVH: n/a BVH: n/a FH: n/a BH: n/a	☐	☐
C2B	C2B	13.7	☐	☑	7	96	Non Sales Canopy	UH: n/a UL: n/a FVH: n/a BVH: n/a FH: n/a BH: n/a	☐	☐
C16A	C16A	30.0	☐	☑	8	240	Non Sales Canopy	UH: n/a UL: n/a FVH: n/a BVH: n/a FH: n/a BH: n/a	☐	☐
				INSTALLED WATTS PAGE TOTAL:		377	Enter sum total of all pages (**Sum Total INSTALLED** Outdoor lighting wattage) into NRCC-LTO-01-E, page 1.		377	

FREEDOM HIGH SCHOOL

PERFORMING ARTS AND CTE FACILITIES

1050 NEROLY RD,
OAKLEY, CA 94561

LIBERTY UNION HIGH SCHOOL DISTRICT

ARCH PROJECT NO: 1739.00
DRAWN BY:
DRAWING SCALE:
PTN: 61721-0068

BID SET

AUGUST 13, 2019

SHEET TITLE

TITLE 24 BLDG B

SHEET NUMBER

T-13

BIM Server: BIMCLOUD-QKA - BIMcloud/1739.00 - Freedom High School/1739.00 FREEDOM HS Performing Arts Center/8/6/2019 5:16 PM

STATE OF CALIFORNIA
OUTDOOR LIGHTING
CEC-NRCC-LTO-01-E (Revised 02/16) — CALIFORNIA ENERGY COMMISSION

CERTIFICATE OF COMPLIANCE	NRCC-LTO-01-E
Outdoor Lighting	(Page 4 of 4)
Project Name: Freedom High School - Building B	Date Prepared: 7/19/2019

DOCUMENTATION AUTHOR'S DECLARATION STATEMENT

1. I certify that this Certificate of Compliance documentation is accurate and complete.

Documentation Author Name: Matt Hargadon	Documentation Author Signature: Matt Hargadon
Company: Guttmann & Blaevoet Consulting Engir	Signature Date: 7/19/2019
Address: 2351 Powell St.	CEA Certification Identification (if applicable):
City/State/Zip: San Francisco/CA/94133	Phone: 4156554000

RESPONSIBLE PERSON'S DECLARATION STATEMENT

I certify the following under penalty of perjury, under the laws of the State of California:
1. The information provided on this Certificate of Compliance is true and correct.
2. I am eligible under Division 3 of the Business and Professions Code to accept responsibility for the building design or system design identified on this Certificate of Compliance (responsible designer).
3. The energy features and performance specifications, materials, components, and manufactured devices for the building design or system design identified on this Certificate of Compliance conform to the requirements of Title 24, Part 1 and Part 6 of the California Code of Regulations.
4. The building design features or system design features identified on this Certificate of Compliance are consistent with the information provided on other applicable compliance documents, worksheets, calculations, plans and specifications submitted to the enforcement agency for approval with this building permit application.
5. I will ensure that a completed signed copy of this Certificate of Compliance shall be made available with the building permit(s) issued for the building, and made available to the enforcement agency for all applicable inspections. I understand that a completed signed copy of this Certificate of Compliance is required to be included with the documentation the builder provides to the building owner at occupancy.

Responsible Designer Name: Pieter Colenbrander	Responsible Designer Signature: P. Colenbrander
Company: O'Mahony & Myer	Date Signed: 8/1/19
Address: 4340 Redwood Hwt, Suite 245	License: E14738
City/State/Zip: San Rafael, CA 94903	Phone: (415) 492-0420

STATE OF CALIFORNIA
OUTDOOR LIGHTING CONTROLS
CEC-NRCC-LTO-02-E (Revised 08/16) — CALIFORNIA ENERGY COMMISSION

CERTIFICATE OF COMPLIANCE	NRCC-LTO-02-E
Outdoor Lighting Controls	(Page 1 of 3)
Project Name: Freedom High School - Building B	Date Prepared: 7/19/2019

A. Mandatory Outdoor Lighting Control Declaration Statements

Check all that apply:
- ☑ Lighting shall be controlled by self-contained lighting control devices which are certified to the Energy Commission according to the Title 20 Appliance Efficiency Regulations in accordance with §110.9(a).
- ☐ Lighting shall be controlled by a lighting control system or energy management control system in accordance with §110.9. An Installation Certificate shall be submitted in accordance with §130.4(b).
- ☑ All lighting controls and equipment shall comply with the applicable requirements in §110.9 and shall be installed in accordance with the manufacturer's instructions in accordance with §130.0(d).
- ☐ Part-Night Outdoor Lighting Controls, as defined in Section 100.1(b), shall meet the requirements in Section 110.9(b)5.
- ☐ All outdoor incandescent luminaires rated over 100 watts, determined in accordance with Section 130.0(c), shall be controlled by a motion sensor.
- ☑ All outdoor luminaires rated for use with lamps greater than 150 lamp watts, determined in accordance with Section 130.0(c), shall comply with Uplight and Glare requirements in accordance with Section 130.2(b).
- ☐ All installed outdoor lighting shall be controlled by a photocontrol or outdoor astronomical time-switch control, or other control capable of automatically switching OFF in accordance with Section 130.2(c)1.
- ☑ All installed outdoor lighting shall be independently controlled from other electrical loads by an automatic scheduling control in accordance with Section 130.2(c)2.
- ☐ All installed outdoor lighting, where the bottom of the luminaire is mounted 24 feet or less above the ground, shall be controlled with automatic lighting controls in accordance with Section 130.2(c)3.
- ☐ For Outdoor Sales Frontage, an automatic lighting control shall be installed in accordance with Section 130.2(c)4.
- ☐ For Building Facade, Ornamental Hardscape and Outdoor Dining lighting, an automatic lighting control shall be installed in accordance with Section 130.2(c)5.
- ☑ Before an occupancy permit is granted for the newly constructed building or for the addition, or for any altered outdoor lighting, the outdoor lighting controls shall be certified as meeting the Acceptance Requirements for Code Compliance in accordance with §130.4.(a). Outdoor lighting controls shall comply with the applicable requirements of Section 130.2(c) and Reference Nonresidential Appendix NA7.8.

STATE OF CALIFORNIA
OUTDOOR LIGHTING CONTROLS
CEC-NRCC-LTO-02-E (Revised 08/16) — CALIFORNIA ENERGY COMMISSION

CERTIFICATE OF COMPLIANCE	NRCC-LTO-02-E
Outdoor Lighting Controls	(Page 2 of 3)
Project Name: Freedom High School - Building B	Date Prepared: 7/19/2019

B. Mandatory Outdoor Lighting Control Schedule and Field Inspection Checklist

Outdoor Lighting Control Schedule		Standards Complying With (✓ all that apply, or enter 'E' if Exempted)							✓ if Acceptance Test Required	Field Inspector	
01	02	03	04	05	06	07	08	09	10	11	
Location and Application of Luminaires Being Controlled	Type/ Description of Lighting Control (i.e. outdoor motion sensor, outdoor photocontrol, outdoor astronomical time-switch control, automatic scheduling control, part-night outdoor lighting control)	# of Units	§130.2(e)	§130.2(c)1	§130.2(c)2	§130.2(c)3	§130.2(c)4	§130.2(c)5		Pass	Fail
									☐	☐	☐
									☐	☐	☐
									☐	☐	☐
									☐	☐	☐
									☐	☐	☐
									☐	☐	☐
									☐	☐	☐
									☐	☐	☐
									☐	☐	☐
									☐	☐	☐
									☐	☐	☐
									☐	☐	☐
									☐	☐	☐
									☐	☐	☐
									☐	☐	☐
									☐	☐	☐

STATE OF CALIFORNIA
OUTDOOR LIGHTING CONTROLS
CEC-NRCC-LTO-02-E (Revised 08/16) — CALIFORNIA ENERGY COMMISSION

CERTIFICATE OF COMPLIANCE	NRCC-LTO-02-E
Outdoor Lighting Controls	(Page 3 of 3)
Project Name: Freedom High School - Building B	Date Prepared: 7/19/2019

DOCUMENTATION AUTHOR'S DECLARATION STATEMENT

1. I certify that this Certificate of Compliance documentation is accurate and complete.

Documentation Author Name: Matt Hargadon	Documentation Author Signature: Matt Hargadon
Company: Guttmann & Blaevoet Consulting Engin	Signature Date: 7/19/2019
Address: 2351 Powell St.	CEA Certification Identification (if applicable):
City/State/Zip: San Francisco/CA/94133	Phone: 4156554000

RESPONSIBLE PERSON'S DECLARATION STATEMENT

I certify the following under penalty of perjury, under the laws of the State of California:
1. The information provided on this Certificate of Compliance is true and correct.
2. I am eligible under Division 3 of the Business and Professions Code to accept responsibility for the building design or system design identified on this Certificate of Compliance (responsible designer).
3. The energy features and performance specifications, materials, components, and manufactured devices for the building design or system design identified on this Certificate of Compliance conform to the requirements of Title 24, Part 1 and Part 6 of the California Code of Regulations.
4. The building design features or system design features identified on this Certificate of Compliance are consistent with the information provided on other applicable compliance documents, worksheets, calculations, plans and specifications submitted to the enforcement agency for approval with this building permit application.
5. I will ensure that a completed signed copy of this Certificate of Compliance shall be made available with the building permit(s) issued for the building, and made available to the enforcement agency for all applicable inspections. I understand that a completed signed copy of this Certificate of Compliance is required to be included with the documentation the builder provides to the building owner at occupancy.

Responsible Designer Name: Pieter Colenbrander	Responsible Designer Signature: P. Colenbrander
Company: O'Mahony & Myer	Date Signed: 8/1/19
Address: 4340 Redwood Hwt, Suite 245	License: E14738
City/State/Zip: San Rafael, CA 94903	Phone: (415) 492-0420

STATE OF CALIFORNIA
OUTDOOR LIGHTING POWER ALLOWANCES
CEC-NRCC-LTO-03-E (Revised 01/16) — CALIFORNIA ENERGY COMMISSION

CERTIFICATE OF COMPLIANCE	NRCC-LTO-03-E
Outdoor Lighting Power Allowances	(Page 1 of 4)
Project Name: Freedom High School - Building B	Date Prepared: 7/19/2019

A. OUTDOOR LIGHTING POWER ALLOWANCE SUMMARY

1. General Hardscape Lighting Power Allowance (Site Total from Section B of NRCC-LTO-03-E)								1.	0
2. Additional Specific "use it or lose it" Lighting Power Allowances listed in each of these cells shall be identical to total allowed watts determined in Section C-1 to C-4 of NRCC-LTO-03-E.									
PER APPLICATION from Section C-1		PER UNIT LENGTH (SALES FRONTAGE) from Section C-2		PER HARDSCAPE AREA (ORNAMENTAL LIGHTING) from Section C-3		PER SPECIFIC AREA from Section C-4.		2.	377
41	+	0	+	0	+	336	=		
3. **Sum Total ALLOWED** Outdoor Lighting Wattage (add rows 1 and 2)								3.	377

B. GENERAL HARDSCAPE LIGHTING POWER ALLOWANCE FROM TABLE 140.7-A

Area Wattage Allowance (AWA)				Linear Wattage Allowance (LWA)			Initial Wattage Allowance (IWA)	Total General Hardscape Lighting Allowance
01	02	03	04	05	06	07	08	09
Name of Area	Illuminated Hardscape Area	AWA Per Square Foot	AWA (B02 x B03)	Perimeter Length of General Hardscape	LPA per Linear Foot	LWA (B05 x B06)	IWA (Watts)	B04 + B07 + B08
							TOTAL	0

STATE OF CALIFORNIA
OUTDOOR LIGHTING POWER ALLOWANCES
CEC-NRCC-LTO-03-E (Revised 01/16) — CALIFORNIA ENERGY COMMISSION

CERTIFICATE OF COMPLIANCE	NRCC-LTO-03-E
Outdoor Lighting Power Allowances	(Page 2 of 4)
Project Name: Freedom High School - Building B	Date Prepared: 7/19/2019

C. ADDITIONAL "USE IT OR LOSE IT" OUTDOOR LIGHTING POWER ALLOWANCES FOR SPECIFIC APPLICATIONS
- ☐ The additional specific outdoor lighting power allowance shall be the smaller of the allowed lighting power or the actual lighting power used.
- ☐ Use Outdoor Lighting Zone (OLZ) that is documented on page 1 of NRCC-LTO-01-E to calculate the specific wattage allowances.

C-1. WATTAGE ALLOWANCE PER APPLICATION – Table 140.7-B
- ☐ Available only for qualifying locations, which include Building Entrances or Exits; Primary Entrances to Senior Care Facilities, Police Stations, Hospitals, Fire Stations, and Emergency Vehicle Facilities; Drive Up Windows; Vehicle Service Station Uncovered Fuel Dispenser, ATM Machine Lighting
- ☐ If more than one luminaire type is used per location, use multiple rows for that location

01	02	03	04	05	06	07	08	09	10
	ALLOTTED WATTS			DESIGN WATTS					
Name of Location for Which Allowance is Claimed	Number of Qualifying Locations	Wattage Allowance per Qualifying Location	Allotted Watts (02 x 03)	Luminaire Code or Symbol	Luminaire Description	Luminaire Quantity	Watts per Luminaire	Design Watts (07 x 08)	Allowed Watts (smaller of 04 or 09)
Bld B Entrance/Ex	4	35	140	C2B	C2B	3	13.7	41	41
						Sum total allowance per application on this site:			41

C-2. WATTAGE ALLOWANCE PER UNIT LENGTH (Sales Frontage) from Table 140.7-B
- ☐ If more than one luminaire type is used per location, use multiple rows for that location

01	02	03	04	05	06	07	08	09	10
	ALLOTTED WATTS			DESIGN WATTS					
Name of Location for Which Allowance is Claimed	Linear Feet of Sales Frontage	Wattage Allowance per Linear Foot	Allotted Watts (02 x 03)	Luminaire Code or Symbol	Luminaire Description	Luminaire Quantity	Watts per Luminaire	Design Watts (07 x 08)	Allowed Watts (smaller of 04 or 09)
						Sum total allowance for sales frontage on the site:			0

STATE OF CALIFORNIA
OUTDOOR LIGHTING POWER ALLOWANCES
CEC-NRCC-LTO-03-E (Revised 01/16) — CALIFORNIA ENERGY COMMISSION

CERTIFICATE OF COMPLIANCE	NRCC-LTO-03-E
Outdoor Lighting Power Allowances	(Page 3 of 4)
Project Name: Freedom High School - Building B	Date Prepared: 7/19/2019

C-3. WATTAGE ALLOWANCE PER SQUARE FOOT OF HARDSCAPE AREA (Ornamental Lighting) – Table 140.7-B
- ☐ Allowance for the total site illuminated hardscape area. Luminaires qualifying for this allowance shall be rated for 100 watts or less as determined in accordance with Section 130.0(c), and shall be post-top luminaires, lanterns, pendant luminaires, or chandeliers.
- ☐ If more than one luminaire type is used per location, use multiple rows for that location

01	02	03	04	05	06	07	08	09	10
	ALLOTTED WATTS			DESIGN WATTS					
Name of area for which ornamental allowance is claimed	Square Feet of Hardscape	Wattage Allowance per Square Foot	Allotted Watts (02 x 03)	Luminaire Code or Symbol	Luminaire Description	Luminaire Quantity	Watts per Luminaire	Design Watts (07 x 08)	Allowed Watts (smaller of 04 or 09)
						Sum total allowance for ornamental lighting on the site:			0

C-4. WATTAGE ALLOWANCE PER SQUARE FOOT OF SPECIFIC AREA - Table 140.7-B
- ☐ Allowances for Building Facades; Outdoor Sales Lots; Vehicle Service Station Hardscape; Vehicle Service Station Canopies; Sales Canopies; Non-sales Canopies; Tunnels; Guard Stations; Student Pick-up/Drop-off zone: Outdoor Dining; Special Security Lighting for Retail Parking and Pedestrian Hardscape.
- ☐ If more than one luminaire type is used per location, use multiple rows for that location

01	02	03	04	05	06	07	08	09	10
	ALLOTTED WATTS			DESIGN WATTS					
Name of Location for Which Allowance is Claimed	Illuminated Area of Application	Wattage Allowance per square Foot	Allotted Watts (02 x 03)	Luminaire Code or Symbol	Luminaire Description	Luminaire Quantity	Watts per Luminaire	Design Watts (07 x 08)	Allowed Watts (smaller of 04 or 09)
Bld B NS Canopy	1.125	0.408	459	C2B	C2B	7	13.7	96	336
				C16A	C16A	8	30.0	240	
						Sum total allowance for specific area on the site:			336

STATE OF CALIFORNIA
OUTDOOR LIGHTING POWER ALLOWANCES
CEC-NRCC-LTO-03-E (Revised 01/16) — CALIFORNIA ENERGY COMMISSION

CERTIFICATE OF COMPLIANCE	NRCC-LTO-03-E
Outdoor Lighting Power Allowances	(Page 4 of 4)
Project Name: Freedom High School - Building B	Date Prepared: 7/19/2019

DOCUMENTATION AUTHOR'S DECLARATION STATEMENT

1. I certify that this Certificate of Compliance documentation is accurate and complete.

Documentation Author Name: Matt Hargadon	Documentation Author Signature: Matt Hargadon
Company: Guttmann & Blaevoet Consulting Engineers	Signature Date: 7/19/2019
Address: 2351 Powell St.	CEA Certification Identification (if applicable):
City/State/Zip: San Francisco/CA/94133	Phone: 4156554000

RESPONSIBLE PERSON'S DECLARATION STATEMENT

I certify the following under penalty of perjury, under the laws of the State of California:
1. The information provided on this Certificate of Compliance is true and correct.
2. I am eligible under Division 3 of the Business and Professions Code to accept responsibility for the building design or system design identified on this Certificate of Compliance (responsible designer).
3. The energy features and performance specifications, materials, components, and manufactured devices for the building design or system design identified on this Certificate of Compliance conform to the requirements of Title 24, Part 1 and Part 6 of the California Code of Regulations.
4. The building design features or system design features identified on this Certificate of Compliance are consistent with the information provided on other applicable compliance documents, worksheets, calculations, plans and specifications submitted to the enforcement agency for approval with this building permit application.
5. I will ensure that a completed signed copy of this Certificate of Compliance shall be made available with the building permit(s) issued for the building, and made available to the enforcement agency for all applicable inspections. I understand that a completed signed copy of this Certificate of Compliance is required to be included with the documentation the builder provides to the building owner at occupancy.

Responsible Designer Name: Pieter Colenbrander	Responsible Designer Signature: P. Colenbrander
Company: O'Mahony & Myer	Date Signed: 8/1/19
Address: 4340 Redwood Hwt, Suite 245	License: E14738
City/State/Zip: San Rafael, CA 94903	Phone: (415) 492-0420

QUATTROCCHI KWOK ARCHITECTS
Main Office:
636 Fifth Street, Santa Rosa, CA 95404
Pleasanton Office:
600 Main Street, Suite E,
Pleasanton, CA 94566
(707) 576-0829

LICENSED ARCHITECT
JIM THEISS
LICENSE # C22643
EXP JUNE 30, 2021
STATE OF CALIFORNIA

SIGNED: AUGUST 13, 2019

FREEDOM HIGH SCHOOL

PERFORMING ARTS AND CTE FACILITIES

1050 NEROLY RD,
OAKLEY, CA 94561

LIBERTY UNION HIGH SCHOOL DISTRICT

ARCH PROJECT NO: 1739.00
DRAWN BY:
DRAWING SCALE:
PTN: 61721-0068

BID SET

AUGUST 13, 2019

SHEET TITLE

TITLE 24 BLDG B

SHEET NUMBER

T-14

BIM Server: BIMCLOUD-QKA - BIMcloud/1739.00 - Freedom High School/1739.00 FREEDOM HS Performing Arts Center.8i6/2019.5:16 PM