FREEDOM HIGH SCHOOL

NEW AUXILIARY GYMNASIUM

1050 NEROLY RD, OAKLEY, CA 94561

LIBERTY UNION HIGH SCHOOL DISTRICT

DSA FILE NO 7-H4 **DSA APPLICATION NO: 01-119278** **PTN: 61721-78**

DSA SUBMITTAL

DECEMBER 28, 2020

PROJECT TEAM

OWNER

Liberty Union School District
20 Oak Street
Brentwood, CA 94513
Phone: 925-634-2166 ext. 2036
Fax: 925-634-1687
Email: evolta@libertyuhsd.k12.ca.us

ARCHITECT

Quattrocchi Kwok Architects
636 Fifth Street
Santa Rosa, CA 95404
Phone: 707-576-0829
Fax: 707-576-0295
Email: jimt@qka.com

CONSTRUCTION MANAGER

Lathrop Construction Associates, Inc.
4001 Park Road
Benicia, CA 94510
Phone: 707-746-8000
Direct: 707-746-4450
Email: anthony.damante@lathropconstruction.com

CIVIL ENGINEER

Carlson Barbee & Gibson, Inc.
2633 Camino Ramon, Suite 350
San Ramon, CA 94583
Phone: 925-866-0322 x297
Email: mvidra@cbandg.com

LANDSCAPE ARCHITECT

GSM Landscape Architects, Inc.
1700 Soscol Ave., Suite 23
Napa, CA 94559
Phone: 707-255-4630 (office)
Phone: 707-815-7661
Email: bart@gsmlainc.com

STRUCTURAL ENGINEER

ZFA Structural Engineers
1212 Fourth Street, Suite Z
Santa Rosa, CA 95404
Phone: 707-526-0992
Fax: 707-526-0217
Email: deidrad@zfa.com

MECHANICAL AND PLUMBING ENGINEER

Costa Engineers
3274 Villa Lane
Napa, CA 94558
Phone: 707-252-9177
Fax: 707-252-6473
Email: cdelcore@costaengineers.com

ELECTRICAL ENGINEER

O'Mahony & Myer (OM&M)
4340 Redwood Highway, Suite 245
San Rafael, CA 94903
Phone: 415-492-0420
Fax: 415-479-6962
Email: pcolenbrander@ommconsulting.com

FIRE PROTECTION

Cypress Engineering Group
8 Harris Court, Suite A8
Monterery, CA 93940
Phone: 831.917.0551
Email: steve@cypresseg.com

AUDIO-VISUAL CONSULTANT

The Shalleck Collaborative Inc.
1553 Martin Luther King Jr. Way
Berkeley, CA 94709
Phone: 415-956-4100
Email: krenzke@shalleck.com

ENERGY

Soldata Energy Consulting, Inc.

2227 Capricorn Way, Suite 202
Santa Rosa, CA 95407
p (707) 545-4440
f (707) 545-4447
sarah@soldata.com

CATHODIC PROTECTION

Cathodic Protection Consultant
V&A Consulting Engineers
1000 Broadway, Suite 320
Oakland, CA 94607
Phone: (510) 903-6600
Email: cteall@vaengineering.com

QUATTROCCHI KWOK ARCHITECTS
Main:
636 Fifth Street, Santa Rosa, CA 95404
East Bay:
55 Harrison Street, Suite 525,
Oakland, CA 94607
(707) 576-0829

LICENSED ARCHITECT
JIM THEISS
LICENSE # C22643
EXP JUNE 30, 2021
STATE OF CALIFORNIA

SIGNED: MAY 5, 2021

FREEDOM HIGH SCHOOL

NEW AUXILIARY GYMNASIUM

1050 NEROLY RD,
OAKLEY, CA 94561

LIBERTY UNION HIGH SCHOOL DISTRICT

DSA APP NO. 01-119278

ARCH PROJECT NO:	1869.00
DRAWN BY:	CH
DRAWING SCALE:	N.T.S.
PTN: 61721-78	FILE NO: 7-H4

BID DOCUMENT

APRIL 27, 2021

SHEET TITLE

COVER SHEET

SHEET NUMBER

G-0.1

BIMcloud: archiserver - BIMcloud Basic for ARCHICAD 22/1869.00 Freedom HS Aux. Gym CD:4/27/2021-1:26 PM

ABBREVIATIONS

&	AND
L	ANGLE
@	AT
℄	CENTERLINE
'	FEET
"	INCHES
d	PENNY
#	POUND/ NUMBER
AB	ANCHOR BOLT
ABBREV	ABBREVIATION
AC	ASPHALT CONCRETE
A/C	AIR CONDITIONING
ACC	ACCESSIBLE
ACOUS	ACOUSTICAL
AC T	ACOUSTICAL TILE
AD	AREA DRAIN
ADJ	ADJUSTABLE
A.F.F.	ABOVE FINISH FLOOR
AGG	AGGREGATE
ALUM	ALUMINUM
ANOD	ANODIZED
APPROX	APPROXIMATE
ARCH	ARCHITECTURAL
ASPH	ASPHALT
BD	BOARD
BITUM	BITUMINOUS
BLDG	BUILDING
BLK	BLOCK
BLKG	BLOCKING
BM	BEAM
BOT	BOTTOM
BO	BY OWNER
BRK	BREAK
BRG	BEARING
BTWN	BETWEEN
BU	BUILT-UP
BUR	BUILT-UP ROOFING
CAB	CABINET
CB	CATCH BASIN
CBC	CALIFORNIA BUILDING CODE
CEM	CEMENT
CER	CERAMIC
CI	CAST IRON
CIR	CIRCLE
CJ	CONTROL JOINT
CORR	CORRIDOR
CL	CLOSET/ CENTER LINE
CLG	CEILING
CLR	CLEAR
CLS	CLOSURE
CMU	CONCRETE MASONRY UNIT
CO	CLEANOUT
COL	COLUMN
COMB	COMBINATION
COMP	COMPOSITION
CONC	CONCRETE
CONN	CONNECTION
CONST	CONSTRUCTION
CONT	CONTINUOUS
CONTR	CONTRACTOR
CT	CERAMIC TILE
CTR	CENTER
CTSK	COUNTERSINK
CUST	CUSTODIAN
CW	COLD WATER
DBL	DOUBLE
DEPT	DEPARTMENT
DET	DETAIL
DF	DRINKING FOUNTAIN
DG	DECOMPOSED GRANITE
DI	DRAIN INLET
DIA	DIAMETER
DIAG	DIAGONAL
DIM	DIMENSION
DISP	DISPOSAL
DIV	DIVISION
DN	DOWN
DO	DOOR OPENING
DIR	DIRECTLY
DR	DOOR
DS	DOWN SPOUT
DSA	DIVISION OF STATE ARCHITECT
DSP	DRY STAND PIPE
DT	DRAIN TILE
DW	DISHWASHER
DWG	DRAWING
DWR	DRAWER
E	EAST
(E)	EXISTING
EA	EACH
EB	EXPANSION BOLT
EE	EACH END
EF	EXHAUST FAN
EJ	EXPANSION JOINT
EL	ELEVATION GRADE
ELEC	ELECTRICAL
ELEV	ELEVATION
EMER	EMERGENCY
EMT	ELECTRIC METALLIC TUBING
ENCL	ENCLOSURE
EP	ELECTRIC PANEL
EQ	EQUAL
EQUIP	EQUIPMENT
EQUIV	EQUIVALENT
ES	EACH SIDE
EW	EACH WAY
EXH	EXHAUST
EXIST	EXISTING
EXP	EXPANSION
EXT	EXTERIOR

F	FACE
FA	FIRE ALARM
FCO	FLOOR CLEAN OUT
FD	FLOOR DRAIN
FDN	FOUNDATION
FE	FIRE EXTINGUISHER
FEC	FIRE EXTINGUISHER CABINET
FF	FINISH FLOOR
FG	FINISH GRADE
FGL	FIBERGLASS
FH	FIRE HYDRANT
FHMS	FLAT HEAD MACHINE SCREW
FHS	FIRE HOSE STATION
FHWS	FLAT HEAD WOOD SCREW
FIB CEM	FIBER CEMENT
FIN	FINISH
FIXT	FIXTURE
FL	FLOOR LINE
FLASH	FLASHING
FLUOR	FLUORESCENT
FLR	FLOOR
FM / FOM	FACE OF MASONRY
FN	FACE NAIL
FOC	FACE OF CONCRETE
FOF	FACE OF FINISH
FOS	FACE OF STUD
FRMG	FRAMING
FR	FIRE-RESISTANT
FRP	FIBERGLASS REINFORCED PANEL
FT	FEET
FTG	FOOTING
FURR	FURRING
GA	GAUGE
GALV	GALVANIZED
GB	GRAB BAR
GC	GENERAL CONTRACTOR
GI	GALVANIZED IRON
GL	GLASS/ GLAZING
GLB	GLUE LAMINATED BEAM
GND	GROUND
GR	GRADE
GYP BD	GYPSUM BOARD
HB	HOSE BIBB
HC	HOLLOW CORE
HDR	HEADER
HDWD	HARDWOOD
HDWR	HARDWARE
HM	HOLLOW METAL
HOR	HORIZONTAL
HP	HIGH POINT
HR	HOUR
HSS	HOLLOW STEEL SECTION
HT	HEIGHT
HTG	HEATING
HVAC	HEATING, VENTILATING, AIR-CONDITIONING
ID	INSIDE DIAMETER
INSUL	INSULATION
INT	INTERIOR
INTEG	INTEGRAL
INTERMED	INTERMEDIATE
INV	INVERT
JH	JOIST HANGER
JST	JOIST
JT	JOINT
KIT	KITCHEN
KP	KICK PLATE
LAB	LABORATORY
LAM	LAMINATE
LAV	LAVATORY
LL	LIVE LOAD
LP	LOW POINT
LT	LIGHT
MAT	MATERIAL
MAX	MAXIMUM
MB	MACHINE BOLT
MC	MEDICINE CABINET
MECH	MECHANICAL
MED	MEDIUM
MEMB	MEMBRANE
MFR	MANUFACTURER
MH	MANHOLE
MIN	MINIMUM
MIR	MIRROR
MISC	MISCELLANEOUS
MO	MASONRY OPENING
MOD	MODULAR
MR	MOISTURE RESISTANT
MTD	MOUNTED
MTL	METAL
MUL	MULLION
N	NORTH
(N)	NEW
NAT	NATURAL
N.I.C.	NOT IN CONTRACT
NO	NUMBER
NOM	NOMINAL
N.T.S.	NOT TO SCALE
O/	OVER
OA	OVERALL
OBS	OBSCURE
OC	ON CENTER
OD	OUTSIDE DIAMETER
OF	OVERFLOW
OFCI	OWNER FURNISHED/ CONTRACTOR INSTALLED
O.L.F.	OCCUPANT LOAD FACTOR
OFF	OFFICE
OPNG	OPENING
OPP	OPPOSITE
OVHD	OVERHEAD

PC	PORTLAND CEMENT
P.C.F.	POUNDS PER CUBIC FOOT
PDA	POWER DRIVEN ANCHOR
PERF	PERFORATED
PH	PLATE HEIGHT
PL	PLATE
P/L	PROPERTY LINE
PLAM	PLASTIC LAMINATE
PLAS	PLASTER/ PLASTIC
PLF	POUNDS PER LINEAL FOOT
PLYWD	PLYWOOD
P.O.C.	POINT OF CONTACT
PR	PAIR
PROP	PROPERTY
PSF	POUNDS PER SQUARE FOOT
PSI	POUNDS PER SQUARE INCH
PT	POINT
PTDF	PRESSURE TREATED DOUGLAS FIR
PTN	PARTITION
PTR	PAPER TOWEL RECEPTACLE
PVC	POLYVINYL CHLORIDE
PVMT	PAVEMENT
R	RISER
R / RAD	RADIUS
RD	ROOF DRAIN
REF	REFERENCE
REFR	REFRIGERATOR
REG	REGULAR
REQD	REQUIRED
REINF	REINFORCED
RH	ROOF HATCH
RHMS	ROUND HEAD MACHINE SCREW
RHWS	ROUND HEAD WOOD SCREW
RM	ROOM
RO	ROUGH OPENING
RWL	RAIN WATER LEADER
RWD	REDWOOD
S	SOUTH
S.A.D.	SEE ARCHITECTURAL DRAWINGS
S.AV.D.	SEE AUDIO VIDEO DRAWINGS
SC	SOLID CORE
S.C.D.	SEE CIVIL DRAWINGS
SCHED	SCHEDULE
SD	STORM DRAIN
SECT	SECTION
S.E.D.	SEE ELECTRICAL DRAWINGS
SEP	SEPARATION
S.F.P.D.	SEE FIRE PROTECTION DRAWINGS
SHTG	SHEATHING
SIM	SIMILAR
SL	SLIDING
S.L.D.	SEE LANDSCAPE DRAWINGS
SM	SHEET METAL
S.M.D.	SEE MECHANICAL DRAWING
SOV	SHUT OFF VALVE
S.P.D.	SEE PLUMBING DRAWINGS
SPEC	SPECIFICATION
SPKR	SPEAKER
SQ	SQUARE
SS	STAINLESS STEEL
S.S.D.	SEE STRUCTURAL DRAWINGS
S.TH.D.	SEE THEATER DRAWINGS
STA	STATION
STD	STANDARD
STL	STEEL
STOR	STORAGE
STRUCT	STRUCTURAL
SUSP	SUSPENDED
SYM	SYMMETRICAL
T	TREAD
T&B	TOP & BOTTOM
TC	TOP OF CURB
TEL	TELEPHONE
TER	TERRAZZO
T&G	TONGUE & GROOVE
TH	THICK
THRU	THROUGH
TJ	TOOL JOINT
TN	TOE NAIL
T.O.D.	TOP OF DECK
T.O.P.	TOP OF PLATE
T.O.R.	TOP OF ROOF
T.O.STL	TOP OF STEAL
T.O.W.	TOP OF WALL
T.P.	TOP OF PAVEMENT
TRN	TRANSOM
TRANS	TRANSPARENT
TS	TUBE STEEL
TUB	TUBULAR
TV	TELEVISION
TW	TACKWALL
TYP	TYPICAL
UNF	UNFINISHED
U.O.N.	UNLESS OTHERWISE NOTED
UR	URINAL
UTIL	UTILITY
VB	VAPOR BARRIER
VCT	VINYL COMPOSITION TILE
VERT	VERTICAL
VEST	VESTIBULE
V.I.F.	VERIFY IN FIELD
VTR	VENT THROUGH ROOF
VWC	VINYL WALL COVERING
W	WEST
W/	WITH
WC	WATER CLOSET
WD	WOOD
WDW	WINDOW
WH	WATER HEATER
W/O	WITHOUT
WP	WATER PROOF
W.P.	WORK POINT
WR	WATER RESISTANT
WSCT	WAINSCOT
WT	WEIGHT
YD	YARD

Z101002

LEGEND

ALL NOTES AND SYMBOLS ARE INTENDED TO APPLY AT ALL OTHER LOCATIONS OF SIMILAR GRAPHIC REPRESENTATION. SUCH INDICATIONS MAY BE LIMITED TO PROMOTE CLARITY. NO LIMITATION OF APPLICATION IS INTENDED EXCEPT AS SPECFICALLY NOTED.

AA
A1 — COLUMN GRIDS A AND 1 IN BUILDING A

6'-0" — DIMENSION TO FACE OF STUD OR MASONRY

6'-0" — DIMENSION TO FACE OF FINISH

6'-0" — DIMENSION TO CENTER LINE OR COLUMN LINE

12'-0" — RELATIVE ELEVATION DIMENSION

B101A — DOOR A IN ROOM NUMBER 101 IN BUILDING B
ACCESSIBLE CLEARANCES SHOWN DASHED
SEE - -

009 — WINDOW NUMBER 009

DETAIL NUMBER 11 ON SHEET NUMBER A-9.12

/ X-#.# — SECTION NUMBER 3 ON SHEET NUMBER A-B6.2

/ X-#.# — ELEVATION NUMBER 2 ON SHEET NUMBER A-B5.3

FLOOR PLAN

CLASSROOM	ROOM NAME
A204	ROOM NUMBER 204 IN BUILDING A
F-4	FLOOR FINISH CODE F-4
A-A7.6	INTERIOR ELEVATION SHOWN ON SHEET A-A7.6

REFLECTED CLG PLAN

CLASSROOM	ROOM NAME
A204	ROOM NUMBER 204 IN BUILDING A
CL-6	CEILING FINISH CODE CL-6
10'-0"	FINISH CEILING HEIGHT 10'-0"

33 — KEYNOTE NUMBER 33

8 — METAL WALL FRAMING SIZE 8"

50 — WALL ACOUSTIC RATING OF STC 50

C — TOILET ACCESSORY C

222 — ARCHITECTURAL WOODWORK STANDARDS (AWS) CABINET DESIGN SERIES IDENTIFIER

W-2 — FINISH CODE, WALL FINISH 2 SHOWN

E1 — ROOM / BUILDING ACCESSIBLE SIGNAGE TYPE E1. SEE ARCHITECTURAL GRAPHICS PLAN AND ACCESSIBLE SIGNAGE DETAIL

W.P. — RELATIVE ORIGIN OR WORK POINT

A — EQUIPMENT TAG
REFER TO EQUIPMENT SCHEDULE

GENERAL NOTES

1. ALL WORK IS SHOWN, DESCRIBED OR SPECIFIED IN THE DRAWINGS INDEXED ON THIS PAGE OR IN THE SPECIFICATIONS.

ALL WORK NOT INDICATED AS EXISTING (E) IS NEW.

2. ALL FRAMING DIMENSIONS ARE TO FACE OF STUD UNLESS NOTED OTHERWISE.
●DO NOT SCALE DRAWINGS.
●VERIFY ALL DIMENSIONS WHERE WORK INVOLVES FRAMING FOR WINDOWS, DOORS, OR CABINETS.

3 ONLY WORK SO NOTED IS NOT IN CONTRACT (N.I.C.) ALL N.I.C. ITEMS ARE NOT PART OF DSA APPROVAL

4. GOVERNING CODES: A COPY OF TITLE 24 PARTS 1-5 SHALL BE KEPT ON THE JOB AT ALL TIMES.
CALIFORNIA CODE OF REGULATIONS TITLE 24 BUILDING STANDARDS CODE:
PART 1 2019 CALIFORNIA ADMINISTRATIVE CODE (CAC), PART 1, TITLE 24 CCR
PART 2 2019 CALIFORNIA BUILDING CODE (CBC), PART 2, TITLE 24 CCR
(2018 INTERNATIONAL BUILDING CODE, VOL. 1 & 2, AND 2019 CALIFORNIA AMENDMENTS)
PART 3 2019 CALIFORNIA ELECTRICAL CODE (CEC), PART 3, TITLE 24 CCR
(2017 NATIONAL ELECTRICAL CODE AND 2016 CALIFORNIA AMENDMENTS)
PART 4 2019 CALIFORNIA MECHANICAL CODE (CMC), PART 4, TITLE 24 CCR
(2018 IAPMO UNIFORM MECHANICAL CODE AND 2016 CALIFORNIA AMENDMENTS)
PART 5 2019 CALIFORNIA PLUMBING CODE (CPC), PART 5, TITLE 24 CCR
(2018 IAPMO UNIFORM PLUMBING CODE AND 2019 CALIFORNIA AMENDMENTS)
PART 6 2019 CALIFORNIA ENERGY CODE (CEC), PART 6, TITLE 24 CCR
PART 9 2019 CALIFORNIA FIRE CODE (CFC), PART 9, TITLE 24 CCR
(2018 INTERNATIONAL FIRE CODE AND 2019 CALIFORNIA AMENDMENTS)
PART 10 2019 CALIFORNIA EXISTING BUILDING CODE (CEBC), PART 10, TITLE 24 CCR
(2018 INTERNATIONAL EXISTING BUILDING CODE AND 2019 CALIFORNIA AMENDMENTS)
PART 11 2019 CALIFORNIA GREEN BUILDING STANDARDS CODE (CAL-GREEN), PART 11, TITLE 24 CCR
PART 12 2019 CALIFORNIA REFERENCED STANDARDS CODE, PART 12, TITLE 24 CCR
TITLE 19 CCR, PUBLIC SAFETY CODE, STATE FIRE MARSHAL REGULATIONS
2010 ADA STANDARDS FOR ACCESSIBILITY DESIGN
2016 ASME A17.1-16/CSA B44-16 SAFETY CODE FOR ELEVATORS AND ESCALATORS

5. STANDARD AND GUIDES:

NFPA 13	INSTALLATION OF FIRE SPRINKLER SYSTEMS (CA AMENDED)	2016 EDITION
NFPA 14	INSTALLATION OF STANDPIPE AND HOSE SYSTEMS	2016 EDITION
NFPA 17	DRY CHEMICAL EXTINGUISHING SYSTEMS	2017 EDITION
NFPA 17A	WET CHEMICAL FIRE EXTINGUISHING SYSTEMS	2017 EDITION
NFPA 20 EDITION	INSTALLATION OF STATIONARY PUMPS FOR FIRE PROTECTION	2016
NFPA 24	STANDARD FOR THE INSTALLATION OF PRIVATE FIRE SERVICE MAINS AND THEIR APPURTENANCES	2016 EDITION
NFPA 25	CALIFORNIA EDITION - TESTING, MAINTENANCE OF WATER-BASED FIRE PROTECTION SYSTEMS	2013 EDITION
NFPA 72	NATIONAL FIRE ALARM AND SIGNALING CODE (CA AMENDED)	2016 EDITION
NFPA 80	STANDARD FOR FIRE DOORS AND OTHER OPENING PROTECTIVES	2016 EDITION
NFPA 110	EMERGENCY AND STANDBY POWER SYSTEMS	2016 EDITION
NFPA 170	STANDARD FOR FIRE SAFETY AND EMERGENCY SYMBOLS	2018 EDITION
NFPA 2001 EDITION	STANDARD ON CLEAN AGENT FIRE EXTINGUISHING SYSTEMS	2015
UL 300	STANDARD FOR FIRE TESTING OF FIRE EXTINGUISHING SYSTEMS FOR PROTECTION OF COMMERCIAL COOKING EQUIPMENT	2005 (R2010)
UL 464	AUDIBLE SIGNALING DEVICES FOR FIRE ALARM AND SIGNALING SYSTEMS, INCLUDING ACCESSORIES	2003 EDITION
UL 521	STANDARD FOR HEAT DETECTORS FOR FIRE PROTECTIVE SIGNALING SYSTEMS	1999 EDITION
UL 1971	STANDARD FOR SIGNALING DEVICES FOR THE HEARING IMPAIRED	2002 EDITION
UL 2034	STANDARD FOR SINGLE AND MULTIPLE CARBON MONOXIDE ALARMS	2017 EDITION
ICC 300	STANDARD FOR BLEACHERS, FOLDING AND TELESCOPIC SEATING, AND GRANDSTANDS	2017 EDITION

6. IN ACCORDANCE WITH TITLE 24 PART 1 CHAPTER 4: THE ADMINISTRATIVE REGULATIONS FOR THE DIVISION OF THE STATE ARCHITECT STRUCTURAL SAFETY (DSA/SS)
●4-331 DSA SHALL BE NOTIFIED AT THE START OF CONSTRUCTION.
●4-332 WHEN CONSTRUCTION IS SUSPENDED FOR MORE THAN ONE MONTH, THE PROJECT INSPECTOR SHALL INFORM DSA.
●4-333(a) OBSERVATION OF THE WORK SHALL BE BY ARCHITECT OR REGISTERED ENGINEER.
●4-333(b) THE DISTRICT MUST PROVIDE AND PAY FOR PROJECT INSPECTOR.
●4-334 SUPERVISION OF CONSTRUCTION BY DSA SHALL BE IN ACCORDANCE WITH THIS SECTION.
●4-335 STRUCTURAL TESTS AND INSPECTION ARE REQUIRED IN ACCORDANCE WITH THIS SECTION. TESTS OF MATERIALS AND TESTING LAB SHALL BE IN ACCORDANCE WITH SECTION 4-335 AND THE DISTRICT SHALL EMPLOY AND PAY THE LAB. COSTS OF RE-TEST MAY BE BACKCHARGED TO THE CONTRACTOR. ALL TESTS SHALL CONFORM TO THE REQUIREMENTS OF SECTION 4-335 AND APPROVED T & I SHEET (DSA-103)
●4-336 VERIFIED REPORTS SHALL BE SUBMITTED BY CONTRACTORS (DSA 006-C), INSPECTORS (DSA 006-PI), ARCHITECTS AND ENGINEERS (DSA 006-AE) IN ACCORDANCE WITH SECTIONS 4-336 AND 4-343.
●4-337 SEMI-MONTHLY REPORTS SHALL BE SUBMITTED BY INSPECTORS (DSA - 155), IN ACCORDANCE WITH SECTIONS 4-337.
●4-338 WORK SHALL BE EXECUTED IN ACCORDANCE WITH THE APPROVED PLANS, ADDENDA AND CONSTRUCTION DOCUMENTS. CHANGES IN THE APPROVED PLANS AND SPECIFICATIONS SHALL BE MADE BY ADDENDA OR CONSTRUCTION CHANGE DOCUMENTS STAMPED AND SIGNED BY THE ARCHITECT OR REGISTERED ENGINEER IN CHARGE. ADDENDA AND CHANGE DOCUMENTS SHALL BE SUBMITTED TO AND APPROVED BY DSA PRIOR TO COMMENCEMENT OF WORK.
● 4-341(a) THE ARCHITECT AND THE REGISTERED ENGINEER SHALL PERFORM THEIR DUTIES IN ACCORDANCE WITH SECTIONS 4-333(a) AND 4-341.
● 4-341(d) INSPECTOR SHALL BE APPROVED BY DSA.
● 4-342 INSPECTION SHALL BE IN ACCORDANCE WITH SECTION 4-333 THE DUTY OF THE INSPECTOR SHALL BE IN ACCORDANCE WITH THIS SECTION.
●.4-343 THE CONTRACTOR SHALL PERFORM HIS DUTIES IN ACCORDANCE WITH THIS SECTION.

7. THE INTENT OF THE DRAWINGS AND SPECIFICATIONS IS THAT THE WORK OF ALTERATION, REHABILITATION OR RECONSTRUCTION IS TO BE IN ACCORDANCE WITH TITLE 24, C.C.R. SHOULD ANY EXISTING CONDITIONS BE DISCOVERED WHICH ARE NOT COVERED BY THE CONTRACT DOCUMENTS WHEREIN THE FINISHED WORK WILL NOT COMPLY WITH SAID TITLE 24 C.C.R. A CONSTRUCTION CHANGE DOCUMENT DETAILING AND SPECIFYING THE REQUIRED REPAIR WORK SHALL BE SUBMITTED TO AND APPROVED BY DSA BEFORE PROCEEDING WITH THE REPAIR WORK. (TITLE 24 PART 1, SECTION 4-338(c))

8. COMPLIANCE WITH CFC CHAPTER 33, FIRE SAFETY DURING CONSTRUCTION AND DEMOLITION AND CBC CHAPTER 33, SAFETY DURING CONSTRUCTION SHALL BE ENFORCED.

9. EMERGENCY VEHICLE ACCESS ROADS AND ON-SITE FIRE HYDRANTS SHALL BE IN SERVICE AND OPERABLE PRIOR TO LOADING THE SITE WITH COMBUSTIBLE MATERIALS.

10. GRADING PLANS, DRAINAGE IMPROVEMENTS, ROAD AND ACCESS REQUIREMENTS, AND ENVIRONMENTAL HEALTH CONSIDERATIONS SHALL COMPLY WITH APPLICABLE LOCAL ORDINANCES.

VICINITY MAP

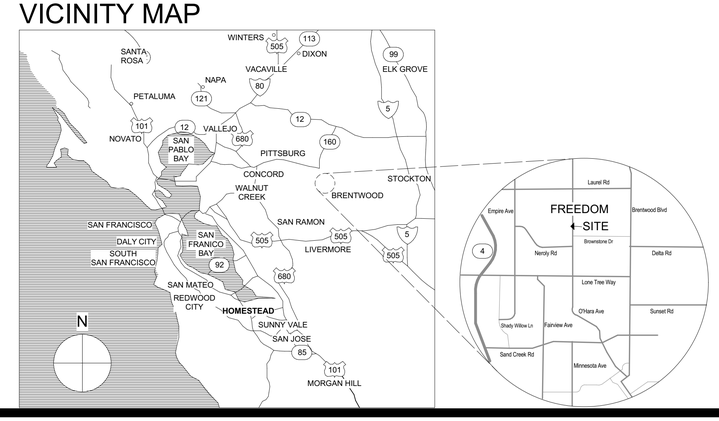

Statement of General Conformance

BY ARCHITECT UTILIZING PLANS (INCLUDING BUT NOT LIMITED TO SHOP DRAWINGS) PREPARED BY OTHER LICENSED DESIGN PROFESSIONALS AND/OR CONSULTANTS

DSA Application No **01-119278** File No **7-H4**

These drawings (marked Civil, Landscape, Structural, Mechanical, Plumbing, Fire Protection, Electrical, Fire Alarm, Bleachers, AV, Energy and Cathodic Protections) and/or specifications and/or calculations for the items listed, have been prepared by other design professionals or consultants who are licensed and/or authorized to prepare such drawings in this state. It has been examined by me for:

1) design intent and appears to meet the appropriate requirements of Title 24, California Code of Regulations and the project specifications prepared by me, and

2) coordination with my plans and specifications and is acceptable for incorporation into the construction of this project.

The Statement of General Conformance "shall not be construed as relieving me of my rights, duties, and responsibilities under Sections 17302 and 81138 of the Education Code and Sections 4-336, 4-341, and 4-344" of Title 24, Part I. (Title 24, Part 1, Section 4-317 (b))

Signature Date
Architect or Engineer designated to be in general responsible charge

Jim Theiss	C22643	June 20, 2021
Print Name	License Number	Expiration Date

PROJECT DESCRIPTON

A NEW TYPE V-B SINGLE STORY +/- 9,942 AUXILLIARY GYMNASIUM WITH BLEACHERS, CLASSROOM AND SUPPORT SPACES WITH RELATED SITE WORK.

DEFERRED APPROVALS

NONE

QUATTROCCHI KWOK ARCHITECTS
Main:
636 Fifth Street, Santa Rosa, CA 95404
East Bay:
55 Harrison Street, Suite 525,
Oakland, CA 94607
(707) 576-0829

LICENSED ARCHITECT
JIM THEISS
LICENSE # C22643
EXP JUNE 30, 2021
STATE OF CALIFORNIA

SIGNED: MAY 5, 2021

FREEDOM HIGH SCHOOL

NEW AUXILIARY GYMNASIUM

1050 NEROLY RD,
OAKLEY, CA 94561

LIBERTY UNION HIGH SCHOOL DISTRICT

DSA APP NO. 01-119278

ARCH PROJECT NO: 1869.00
DRAWN BY: *fill out manualy ea sheet!*
DRAWING SCALE: N.T.S.
PTN: 61721-78 FILE NO: 7-H4

BID DOCUMENT

APRIL 27, 2021

SHEET TITLE

ABBREVIATIONS AND NOTES

SHEET NUMBER

G-0.2

BIMcloud: archiserver - BIMcloud Basic for ARCHICAD 22/1869.00 Freedom HS Aux. Gym_CD.4/27/2021,1:26 PM

SHEET INDEX (TOTAL 135 SHEETS)

FIRE PROTECTION (9 SHTS)

FP-0.1	LEGEND, NOTES, AND ABREVATIONS FIRE PROTECTION
FP-0.2	DETAILS - FIRE PROTECTION
FP-1.1	SITE PLAN - FIRE PROTECTION
FP-M2.1	PIPING PLAN -FIREPROTECTION
FP-M3.1	CEILING PLAN -FIREPROTECTION
FP-M4.1	SECTIONS - FIRE PROTECTION
FP-6.1	DETAILS - FIRE PROTECTION
FP-6.2	DETAILS - FIRE PROTECTION
FP-6.3	SEISMIC BRACING CALCULATIONS - FIRE PROTECTION

AUDIO VISUAL (11 SHTS)

AV-M0.1	AV PANEL SCHEDULE & ALS INFORMATION
AV-M0.2	AV WIRETYPE SCHEDULE
AV-M0.3	AV STANDARD DETAILS
AV-M0.4	AV STANDARD DETAILS
AV-M1.1	AV DEVICE PLAN AT LEVEL 1
AV-M2.1	AV DEVICE RCP AT LEVEL 1
AV-M3.1	AUDIO PLANS & SECTIONS AT THEATRE
AV-M5.1	WIRE & CONDUIT RISER DIAGRAMS
AV-M6.1	AV BLOCK DIAGRAMS
AV-M7.1	AV PANEL ELEVATIONS
AV-M8.1	AV MOUNTING DETAILS

BLEACHERS (11 SHTS)

B1	A00: TITLE SHEET A01: PLAN VIEW
B2	A02: SECTION VIEW A03: DETAILS
B3	S1: COVER SHEET S2: 10" RISE PLAN, ELEVATION & FRAMING
B4	S4: DECK & SEAT ASSEMBLIES S5:NARROW IDS POWER ASSY
B5	S7: POST ASSEMBLIES S8: POST ASSEMBLIES CONT.
B6	S9: DECK SUPPORTS S10: DECK SUPPORTS CONT.
B7	S11: BRACING S12: BRACING CONT.
B8	S13: WALL ATTACHMENT DETAILS S15: END RAILS
B9	S16: AISLE STEPS S17: AISLE HAND RAIL
B10	S18: ACCESSIBLE SPACES S19: ACCESSIBLE SPACES CONT.
B11	S20: DIMENSIONS

TITLE 24 ENERGY CALCS (3 SHTS)

T-1.1	TITLE 24 ENERGY CALCS
T-1.2	TITLE 24 ENERGY CALCS
T-1.3	TITLE 24 ENERGY CALCS

CATHODIC PROTECTION (2 SHTS)

CP-1.1	CATHODIC PROTECTION
CP-1.2	CATHODIC PROTECTION

GENERAL (7 SHTS)

G-0.1	COVER SHEET
G-0.2	ABBREVIATIONS AND NOTES
G-0.3	SHEET INDEX
G-0.4	FIRE LIFE SAFETY SITE PLAN
G-0.5	SITE ACCESS PLAN
G-0.6	ENLARGED SITE PLAN, CODE ANALYSIS, EXITING PLAN
G-0.7	OVERALL SITE PLAN

CIVIL (7 SHTS)

C-1.0	EXISTING CONDITIONS/DEMOLITION
C-2.0	HORIZONTAL CONTROL PLAN
C-2.1	DETAILS
C-3.0	UTILITY PLAN
C-4.0	GRADING AND DRAINAGE PLAN
C-5.0	STORMWATER CONTROL PLAN
C-6.0	EROSION CONTROL PLAN

LANDSCAPE (11 SHTS)

L1.0	MATERIAL AND DETAIL REFERENCE PLAN
L1.1	CONSTRUCTION DETAILS
L1.2	CONSTRUCTION DETAILS
L2.0	LAYOUT PLAN
L3.0	IRRIGATION PLAN
L3.1	IRRIGATION LEGEND AND NOTES
L3.2	IRRIGATION DETAILS
L3.3	IRRIGATION DETAILS
L3.3	IRRIGATION SCHEDULES
L4.0	PLANTING PLAN
L4.1	PLANTING DETAILS

ARCHITECTURAL (25 SHTS)

A-M2.1	FLOOR PLAN
A-M2.2	COMPOSITE COURT STRIPING PLAN
A-M3.1	REFLECTED CEILING PLAN
A-M4.1	ROOF PLAN
A-M5.1	EXTERIOR ELEVATIONS
A-M6.1	BUILDING SECTIONS
A-M6.2	WALL SECTIONS
A-M6.3	WALL SECTIONS
A-M7.1	INTERIOR ELEVATIONS
A-M7.2	INTERIOR ELEVATIONS
A-M7.3	INTERIOR ELEVATIONS
A-M7.4	INTERIOR ELEVATIONS
AG-2.1	ARCH GRAPHIC PLAN AND DETAILS
A-8.1	DOOR AND WINDOW SCHEDULE AND DETAILS
A-9.1	EXTERIOR WALL DETAILS
A-9.2	WALL DETAILS
A-9.3	OPENING DETAILS
A-9.4	ROOF DETAILS
A-9.5	ROOF DETAILS
A-9.6	ROOF DETAILS
A-9.7	RAIN CANOPY DETAILS
A-10.1	CEILING DETAILS WOOD
A-10.2	CEILING DETAILS AT METAL DECK
A-10.3	INTERIOR DETAILS
A-10.4	INTERIOR DETAILS

STRUCTURAL (14 SHTS)

S-M0.1	GENERAL NOTES
S-M1.1	TYPCIAL CONCRETE DETAILS
S-M1.2	TYPCIAL WOOD DETAILS
S-M1.3	TYPCIAL WOOD DETAILS
S-M1.4	TYPICAL METAL DECKING DETAILS
S-M2.1	FOUNDATION PLAN
S-M2.2	LOWER ROOF FRAMING PLAN
S-M2.3	UPPER ROOF FRAMING PLAN
S-M3.1	ELEVATION & SCHEDULES
S-M3.2	ELEVATIONS
S-M4.1	FOUNDATION DETAILS
S-M5.1	STEEL FRAMING DETAILS
S-M5.2	STEEL TRUSS ELEVATIONS AND DETAILS
S-M6.1	WOOD DETAILS

MECHANICAL (10 SHTS)

M-M1.1	MECHANICAL LEGENDS & SCHEDULE
M-M2.1	MECHANICAL FLOOR PLAN
M-M3.1	MECHANICAL ROOF PLAN
M-M6.1	MECHANICAL SECTIONS
M-M7.1	MECHANICAL DETAILS
M-M7.2	MECHANICAL DETAILS
M-M7.3	MECHANICAL DETAILS
M-M7.4	MECHANICAL DETAILS
M-M8.1	CONTROL DIAGRAMS
M-M8.2	CONTROL DIAGRAMS

PLUMBING (7 SHTS)

P-M1.1	PLUMBING SCHEDULES & LEGENDS
P-M2.0	GAS SITE PLAN
P-M2.1	PLUMBING WASTE & VENT FLOOR PLAN
P-M2.2	PLUMBING WATER & GAS
P-M3.1	PLUMBING ROOF PLAN
P-M7.1	PLUMBING DETAILS
P-M7.2	PLUMBING DETAILS

ELECTRICAL (18 SHTS)

E-0.1	SYMBOLS LIST, GENERAL NOTES & LIST OF DRAWNGS
E-0.2	LUMINAIRE SCHEDULE
E-1.1	SITE PLAN - ELECTRICAL
E-M2.1	FLOOR PLAN -LIGHTING
E-M3.1	FLOOR PLAN -POWER & SIGNAL
E-M3.2	ROOF PLAN -ELECTRICAL
E-5.1	SINGLE LINE DIAGRAM - POWER
E-5.2	SINGLE LINE DIAGRAMS - SIGNAL
E-5.3	LIGHTING CONTROL DIAGRAMS
E-6.1	PANEL SCHEDULES
E-7.1	DETAILS
E-7.2	DETAILS
E-8.1	TITLE 24 COMPLIANCE DOCUMENTS
E-8.2	TITLE 24 COMPLIANCE DOCUMENTS
FE-0.1	FIRE ALARM EQUIPMENT LIST, NOTES & DETAILS
FE-1.1	SITE PLAN - FIRE ALARM
FE-M3.1	FLOOR PLAN - FIRE ALARM
FE-5.1	FIRE ALARM RISER DIAGRAM

QUATTROCCHI KWOK ARCHITECTS

Main:
636 Fifth Street, Santa Rosa, CA 95404
East Bay:
55 Harrison Street, Suite 525,
Oakland, CA 94607
(707) 576-0829

LICENSED ARCHITECT
JIM THEISS
LICENSE # C22643
EXP JUNE 30, 2021
STATE OF CALIFORNIA

SIGNED: MAY 5, 2021

FREEDOM HIGH SCHOOL

NEW AUXILIARY GYMNASIUM

1050 NEROLY RD,
OAKLEY, CA 94561

LIBERTY UNION HIGH SCHOOL DISTRICT

DSA APP NO. 01-119278

ARCH PROJECT NO:	1869.00
DRAWN BY:	RIC
DRAWING SCALE:	N.T.S.
PTN: 61721-78	FILE NO: 7-H4

BID DOCUMENT

APRIL 27, 2021

SHEET TITLE

SHEET INDEX

SHEET NUMBER

G-0.3

BIMcloud: archiserver - BIMcloud Basic for ARCHICAD 22/1869.00 Freedom HS Aux. Gym CD;4/27/2021;3:16 PM

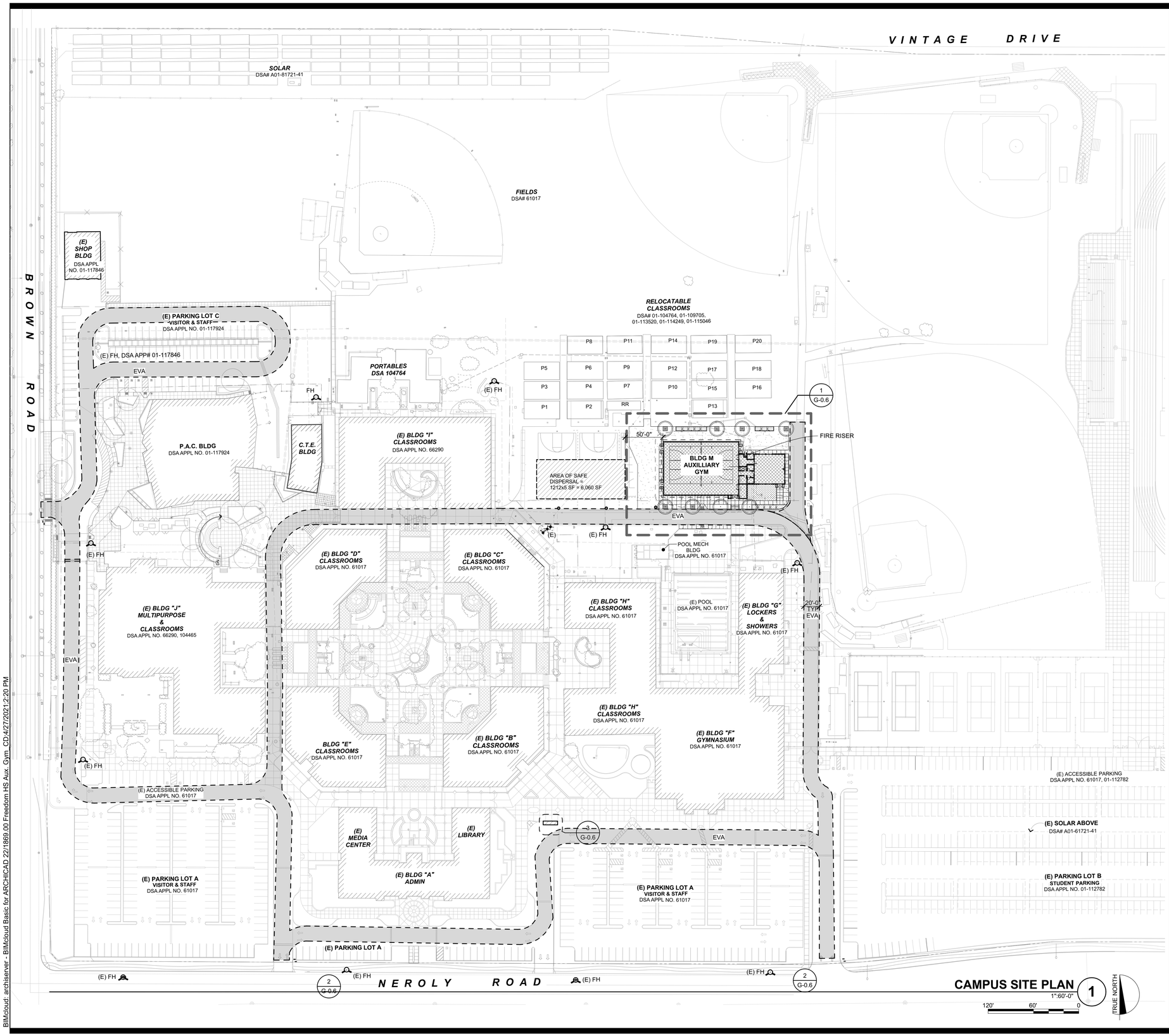

DSA 810

FIRE & LIFE SAFETY SITE CONDITIONS SUBMITTAL

Division of the State Architect (DSA) documents referenced within this publication are available on the DSA Forms or DSA Publications webpages.

To facilitate the Division of the State Architect's (DSA) fire and life safety plan review of project site conditions, DSA requires the design professional to provide the following information at time of project submittal for projects consisting of construction of a new campus, construction of new building(s), additions to existing buildings, and for site alternate design means for fire department emergency vehicle access, and fire suppression water supply.

Information associated with compliance items 1 through 3 below is to be provided for all project types indicated above. Information associated with items 4 through 7 is to be completed when an alternate means is utilized. Acknowledgement by the school district and signature from the Local Fire Authority (LFA) is only required when an alternate design means is being requested.

The Project Information and Fire & Life Safety Information sections are to be completed for all projects and imaged onto the fire access site plan. When an alternate design/means is proposed, all sections on pages 1 and 2 are to be completed and imaged on the fire access site plan.

For additional information refer to the instructions at the end of this form and DSA Policy *PL 09-01: Fire Flow for Buildings*.

PROJECT INFORMATION

School District/Owner:	Liberty Union High School District
Project Name/School:	Freedom High School, Auxiliary Gymnasium
Project Address:	1050 Neroly Road. Oakley, CA

FIRE & LIFE SAFETY INFORMATION

1.	Has a fire hydrant flow test been performed within the past 12 months? *(If yes, provide a copy of the test data.)*	Yes ☑	No ☐
2.	Was the fire hydrant water flow test performed as part of this LFA review?	Yes ☑	No ☐
3.	Is the project located within a designated fire hazard severity zone (FHSZ) as established by Cal-Fire? *(If yes, indicate FHSZ classification below.)*	Yes ☐	No ☑
	Refer to the following website for FHSZ locations: http://egis.fire.ca.gov/FHSZ/	Moderate ☐ / High ☐	Very High ☐
	Wildland Interface Area (WIFA) *(If any designations are checked, project design must meet the requirements of CBC Chapter 7A.)*		WIFA ☐

CONDITION MEANS AND METHODS RESOLUTION		ALTERNATE ACCEPTED			
		Yes	No	N/A	N/R
4.	Emergency vehicle access roadways do not meet CFC requirements.			✔	
4a.	**Acceptable Alternate:** Emergency vehicle and personnel access as proposed by the project architect is acceptable for providing fire suppression and protection of life and property.				
5.	**Fire Hydrants:** Number and spacing does not meet CFC requirements.			✔	
5a.	**Acceptable Alternate:** Number of fire hydrants and spacing as proposed by the project architect is acceptable for fire suppression and protection of life and property.				
6.	**Fire Hydrants:** Water flow and pressure are less than CFC minimum.			✔	
6a.	**Acceptable Alternate:** The available flow and pressure is acceptable for providing fire suppression and protection of life and property.				
7.	Location of fire department connection(s) serving fire sprinkler systems or standpipe systems does not meet CFC requirements.			✔	
7a.	**Acceptable Alternate:** The location of fire department connection serving the fire sprinkler system and/or standpipe system is acceptable for providing fire suppression and protection of life and property.				

School District Acceptance of Acceptable Design Alternates

By signing this form, the school district acknowledges and accepts the proposed design as an alternative to California Building Code (CBC) and California Fire Code (CFC) minimum requirements, as indicated by one or more of the conditions indicated at items 4a, 5a, 6a or 7a, for providing fire and life safety protection of life and property.

Accepted by: _____ Title: _____

Signature: _____ Date: _____

LOCAL FIRE AUTHORITY (LFA) INFORMATION

LFA Agency Name:	East Contra Costa Fire Protection		
LFA Review Official:	George Apple		
Title:	Contract Plans Examiner	Work Phone:	916-416-0332
Work Email:	gapple@eccfpd.org		
LFA Reviewer's Signature:	George W Apple	Date:	12-28-20

Freedom High School

Building M = 9,942 SF = 2,750 gpm required
* Buildings are equipped with automatic sprinklers in accordance with CBC 903 and are allow a 50% reduction in flow
Building : 1,375 gpm
Minimum 1,500 gpm per CFC BB 105.1

WATER FLOW TEST REPORT
HOUSTON FIRE SYSTEM : March 3, 2021
Static Pressure (SP): 44 psi
Residual Pressure (RP): 36 psi
Observed Flow : 919

Flow available at 20 psi residual:

Q@20 = (Static -20)^0.54/(Static-Residual)^0.54x(Observed Flow)
=(44-20)^0.54/(44-36)^0.54 x (919 gpm)
=1.8x919
=1663 gpm

SITE PLAN LEGEND

- PAVEMENT, S.L.D.; S.C.D.
- NEW BLDG M
- EXISTING BUILDING TO REMAIN
- (E) 20' WIDE EMERGENCY VEHICLE ACCESS ROUTE
- FH — (E) FIRE HYDRANT (U.O.N.), S.C.D.
- FDC PIV FSR — (E) FIRE WATER VALVES, S.C.D.
- (E) PROPERTY LINE

QUATTROCCHI KWOK ARCHITECTS
Main:
636 Fifth Street, Santa Rosa, CA 95404
East Bay:
55 Harrison Street, Suite 525,
Oakland, CA 94607
(707) 576-0829

LICENSED ARCHITECT
JIM THEISS
LICENSE # C22643
EXP JUNE 30, 2021
STATE OF CALIFORNIA
SIGNED: MAY 5, 2021

FREEDOM HIGH SCHOOL

NEW AUXILIARY GYMNASIUM

1050 NEROLY RD,
OAKLEY, CA 94561

LIBERTY UNION HIGH SCHOOL DISTRICT

DSA APP NO. 01-119278

ARCH PROJECT NO:	1869.00
DRAWN BY:	RIC
DRAWING SCALE:	1:60
PTN: 61721-78	FILE NO: 7-H4

BID DOCUMENT

APRIL 27, 2021

SHEET TITLE

FIRE LIFE SAFETY SITE PLAN

SHEET NUMBER

G-0.4

BIMcloud: archiserver - BIMcloud Basic for ARCHICAD 22/1869.00 Freedom HS Aux. Gym CD:4/27/2021;2:20 PM

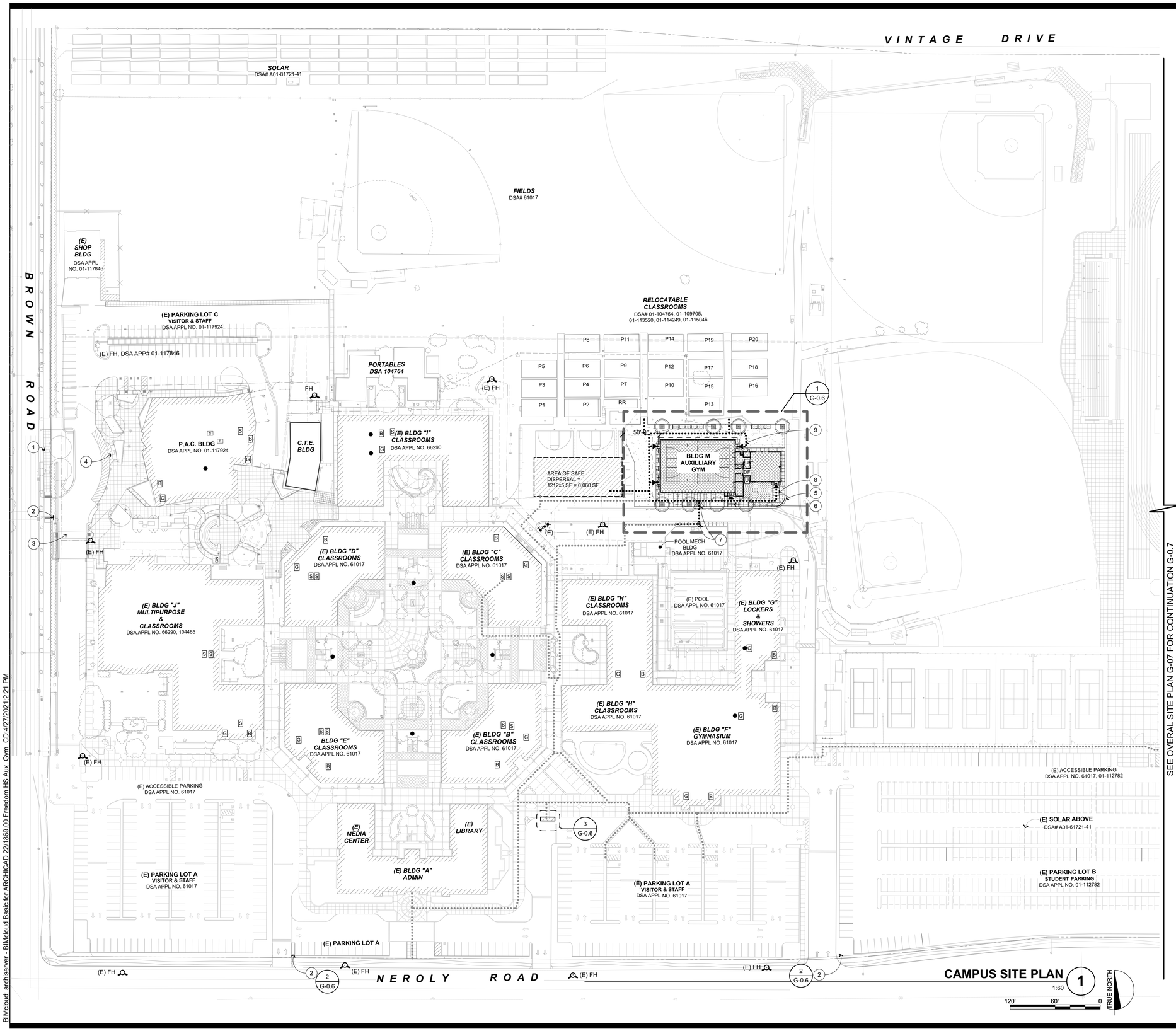

CAMPUS SITE PLAN 1
1:60

BIMcloud: archiserver - BIMcloud Basic for ARCHICAD 22/1869.00 Freedom HS Aux. Gym CD.4/27/2021,2:21 PM

SITE KEYNOTES

1. (E) ACC CONC WALK
2. (E) PARKING TOW-AWAY SIGN
3. (E) ACCESS TO PUBLIC
4. (E) PASSENGER DROP OFF & LOADING ZONE
5. CIVIL ITEM, S.C.D.
6. LANDSCAPE ITEM, .S.L.D.
7. ACC CURB CUT, S.C.D.
8. ACC SLOPED WALK, S.C.D., S.L.D.
9. ELECTRICAL ITEM, S.E.D.

SITE ACCESS NOTES

1. IMPERVIOUS SURFACES WITHIN 10 FEET OF THE BUILDING FOUNDATION SHALL BE SLOPED NOT LESS THAN 2% AWAY FROM THE BUILDING. SUCH SURFACES SHALL BE PERMITTED TO SLOPE LESS THAN 2% WHERE THE SURFACE IS A DOOR LANDING OR REQUIRED RAMP.
2. SEE THIS SHEET FOR ACCESSIBLE PATH OF TRAVEL INFORMATION
3. SEE SHEET G-0.6 FOR CODE INFORMATION
4. REFER TO CIVIL ENGINEERING DWGS FOR SIDEWALK GRADES
5. REFER TO CIVIL ENGINEERING DRAWINGS AND LANDSCAPE PLANS FOR SITE FEATURES NOT OTHERWISE INDICATED.

DESIGN PROFESSIONAL IN GENERAL RESPONSIBLE CHARGE STATEMENT:
THE P.O.T. IDENTIFIED IN THESE CONSTRUCTION DOCUMENTS IS COMPLIANT WITH THE CURRENT APPLICABLE CALIFORNIA BUILDING CODE ACCESSIBILITY PROVISIONS FOR PATH OF TRAVEL REQUIREMENTS FOR ALTERATIONS, ADDITIONS AND STRUCTURAL REPAIRS. AS PART OF THE DESIGN OF THIS PROJECT THE P.O.T. WAS EXAMINED AND ANY ELEMENT, COMPONENTS OR PORTIONS OF THE P.O.T. THAT WERE DETERMINED TO BE NONCOMPLIANT
1) HAVE BEEN IDENTIFIED AND
2) THE CORRECTIVE WORK NECESSARY TO BRING THEM INTO COMPLIANCE HAS BEEN INCLUDED WITHIN THE SCOPE OF THIS PROJECT'S WORK THROUGH DETAILS, DRAWINGS AND SPECIFICATIONS INCORPORATED INTO THESE CONSTRUCTION DOCUMENTS.

ANY NONCOMPLIANT ELEMENT, COMPONENT, OR PORTION OF THE P.O.T. THAT WILL NOT BE CORRECTED BY THIS PROJECT BASED ON VALUATION THRESHOLD LIMITATIONS OR A FINDING OF UNREASONABLE HARDSHIP ARE SO INDICATED IN THESE CONSTRUCTION DOCUMENTS.

DURING CONSTRUCTION IF P.O.T. ITEMS WITHIN THE SCOPE OF THE PROJECT REPRESENTED AS CODE-COMPLIANT ARE FOUND TO BE NONCONFORMING BEYOND REASONABLE CONSTRUCTION TOLERANCES, THEY SHALL BE BROUGHT INTO COMPLIANCE WITH THE CBC AS A PART OF THIS PROJECT BY MEANS OF A CONSTRUCTION CHANGE DOCUMENT.

INDICATES ACCESSIBLE ROUTE

THE ACCESSIBLE ROUTE (PATH OF TRAVEL) INDICATED ON THE PLAN IS A BARRIER-FREE ACCESS ROUTE AND HAS BEEN PROVIDED IN ACCORDANCE WITH IR 11B-10 AND SHALL COMPLY WITH THE FOLLOWING:
- 1:20 MAXIMUM SLOPE WITHOUT A RAMP HANDRAIL
- 1:48 MAXIMUM CROSS SLOPE
- NO ABRUPT VERTICAL CHANGES EXCEEDING 1/4". CHANGES BETWEEN 1/4" TO 1/2" VERTICAL CAN BE AT 1:2 MAX SLOPE. CHANGES LESS THAN 1/4" CAN BE VERTICAL
- 48" MIN. CLEAR IN WIDTH (60" MIN PASSING SPACE EVERY 200 LINEAL FEET)
- NON-SLIP SURFACE -HEAVY BROOM FINISH AT EXTERIOR CONCRETE PAVING WHERE SLOPED >6%, MEDIUM BROOM FINISH AT SLOPES <6%
- MAINTAIN FREE OF OVERHANGING OBSTRUCTIONS TO 80" MIN
- PROTRUDING OBJECTS NOT GREATER THAN 4" SHALL BE MOUNTED BETWEEN 27" AND 80" A.F.F.
- WHERE A DRAIN INLET IS IN THE PATH OF TRAVEL, THE GRATE SHALL BE ORIENTED SO THAT MAX OPENING IS 1/2" & LONG DIM IS PERPENDICULAR TO THE PREDOMINANT DIRECTION OF PEDESTRIAN TRAVEL
- CONTRACTOR TO VERIFY THAT NO BELOW-GRADE PULL BOXES OCCUR WITHIN THE AREA OF TRUNCATED DOMES

PARKING AND PEDESTRIAN SITE SIGNAGE SHALL COMPLY WITH CBC SECTIONS 11B-502.6 11B-502.8 & 11B-703.7.2.1
BUILDING SIGNAGE SHALL COMPLY WITH CBC 11B-703

PEDESTRIAN GATES SHALL COMPLY WITH CBC 1010.2 & 11B-206.5

ACCESS SITE PLAN LEGEND

- NEW BUILDING
- (E) BUILDING TO REMAIN, NO WORK
- BARRIER FREE PATH OF TRAVEL
- (E) BARRIER FREE PATH OF TRAVEL
- ACCESSIBLE ENTRY/ EXTERIOR DOOR AT P.O.T.
- (E) ACCESSIBLE DRINKING FOUNTAIN
- DF ACCESSIBLE DRINKING FOUNTAIN
- U ACCESSIBLE UNISEX TOILET
- B G S (E) RESTROOM - G:GIRLS; B:BOYS; S-STAFF
- PROPERTY LINE (APPROX.)

PARKING COUNT

	OVERALL	ACC STALL	ACC VAN STALL	REQUIRED STD	REQUIRED VAN
(E) PARKING LOT A VISITOR & STAFF DSA 61017	352	11	2	6	2
(E) PARKING LOT B STUDENT PARKING DSA 61017; A01-61721-41	397	8	2	6	2
(E) PARKING LOT C STUDENT DSA 10-117924	72	4	1	3	1

CBC 2019 TABLE 11B-208.2:
51-75 TOTAL SPACES = 3 REQ'D ACC SPACES
201-300 TOTAL SPACES = 7 REQ'D ACC SPACES
301-400 TOTAL SPACES = 8 REQ'D ACC SPACES

CBC 2019 SECTION 11B-208.2.4:
FOR EVERY 6 OR FRACTION OF 6 ACC PARKING SPACES REQUIRED, AT LEAST 1 SHALL BE A VAN ACCESSIBLE PARKING SPACE.

QUATTROCCHI KWOK ARCHITECTS
Main:
636 Fifth Street, Santa Rosa, CA 95404
East Bay:
55 Harrison Street, Suite 525,
Oakland, CA 94607
(707) 576-0829

LICENSED ARCHITECT
JIM THEISS
LICENSE # C22643
EXP JUNE 30, 2021
STATE OF CALIFORNIA
SIGNED: MAY 5, 2021

FREEDOM HIGH SCHOOL

NEW AUXILIARY GYMNASIUM

1050 NEROLY RD,
OAKLEY, CA 94561

LIBERTY UNION HIGH SCHOOL DISTRICT

DSA APP NO. 01-119278

ARCH PROJECT NO:	1869.00
DRAWN BY:	RIC
DRAWING SCALE:	1:60
PTN: 61721-78	FILE NO: 7-H4

BID DOCUMENT

APRIL 27, 2021

SHEET TITLE

SITE ACCESS PLAN

SHEET NUMBER

G-0.5

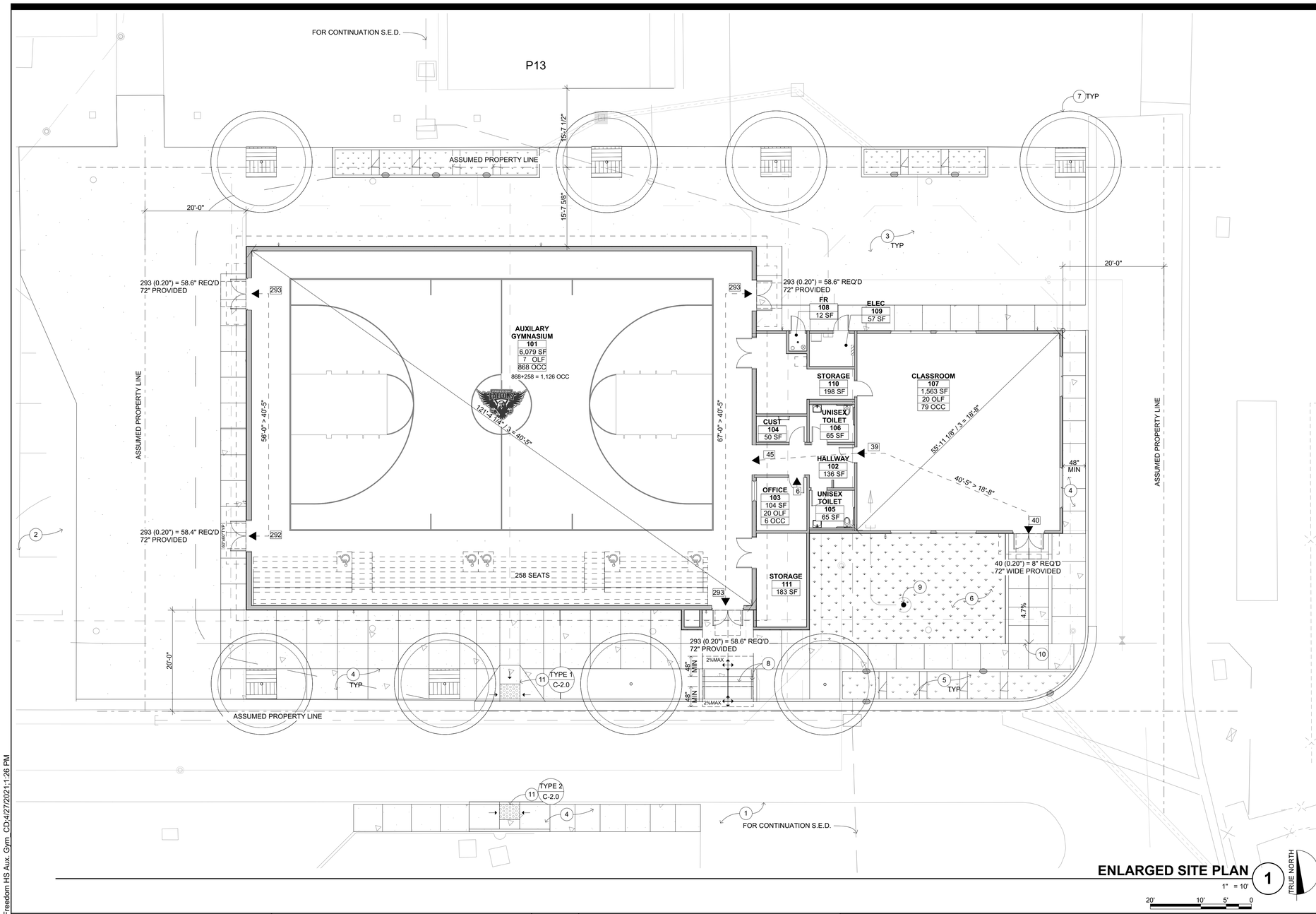

ENLARGED SITE PLAN 1

1" = 10'

20' 10' 5' 0

SITE KEYNOTES

1. (E) CONCRETE WALK
2. (E) PAVING WITH SPORTS STRIPING
3. ASPHALT PAVING, S.C.D.
4. CONCRETE SIDEWALK/GUTTER, S.C.D.
5. BIO-RETENTION AREA, S.L.D.; S.C.D.
6. SYNTHETIC TURF, S.L.D.
7. PLANTING, S.L.D.
8. CONCRETE STEPS AND RAILINGS, S.L.D.; S.C.D.
9. ELECTRICAL ITEM, S.E.D.
10. SLOPED WALK, S.C.D.
11. ACC CURB CUT, S.C.D.

SITE PLAN LEGEND

AC AND CONC PAVING, S.C.D.; S.L.D.

LANDSCAPE ITEM, S.L.D.

QUATTROCCHI KWOK ARCHITECTS

Main:
636 Fifth Street, Santa Rosa, CA 95404
East Bay:
55 Harrison Street, Suite 525,
Oakland, CA 94607
(707) 576-0829

LICENSED ARCHITECT
JIM THEISS
LICENSE # C22643
EXP JUNE 30, 2021
STATE OF CALIFORNIA

SIGNED: MAY 5, 2021

FREEDOM HIGH SCHOOL

NEW AUXILIARY GYMNASIUM

1050 NEROLY RD,
OAKLEY, CA 94561

LIBERTY UNION HIGH SCHOOL DISTRICT

DSA APP NO. 01-119278

ARCH PROJECT NO:	1869.00
DRAWN BY:	RIC
DRAWING SCALE:	1/8" = 1'-0"
PTN: 61721-78	FILE NO: 7-H4

BID DOCUMENT

APRIL 27, 2021

SHEET TITLE

ENLARGED SITE PLAN, CODE ANALYSIS, EXITING PLAN

SHEET NUMBER

G-0.6

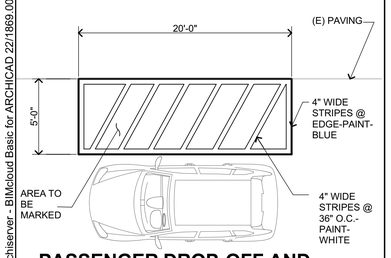

PASSENGER DROP-OFF AND LOADING ZONE 3

1 1/2"= 1'-0"

(E) SIGNAGE TO REMAIN. ADD INFORMATION ON POLICE DEPARTMENT AND TELEPHONE NUMBER AS NOTED.

(E) TOW-AWAY SIGN 2

N. T. S.

1869.07

Freedom High School

Building M = 9,942 SF = 2,750 GPM required
* Buildings are equipped with automatic sprinklers in accordance with CBC 903 and are allow a 50% reduction in flow
Actual require fire flow
Building : 1,375 GPM minimum 1,500 per DSA PL-09-01

Fire Flow provided
Static Pressure (SP): 62psi
Residual Pressure (RP): 37 psi
Predicted flow (PW) 20psi
Flow: 843

SP-PF: 62-20 = 42
SP-RP: 62-37 = 25
42/25 = 1.68
1.68^.54 = 1.38
1.38 x 843 (flow) = 1,164 GPM Adjusted per hydrant' (2) hydrants within 150' of new building

CODE COMPLIANCE SUMMARY *Based on 2019 California Building Code (CBC)*

BUILDING ID	AUX. GYM	COMPLIES	ATTACHED CLASSROOM	COMPLIES	REMARKS
Scope	New Gym Building		New Classroom		
OCCUPANCY GROUP- *Sec 303*	A-4		E		
CONSTRUCTION TYPE- *Sec 601*	VB		VB		NO PROTECTION OF STRUCTURAL ELEMENTS
AUTOMATIC FIRE SUPPRESSION SYSTEM	YES		YES		
ALLOWABLE BUILDING HT - *Table 504.3*	40'		60'		
ACTUAL BUILDING HT	32'	OK	19'	OK	
ALLOWABLE NUMBER OF STORIES - *Table 504.4*	1		2		
ACTUAL STORIES	1	OK	1	OK	
ALLOWABLE AREA FACTOR (SF) A_a - *Table 506.2*	24,000		38,000		
ALLOWABLE AREA W/ FRONTAGE INCREASE - Sec 506.3.3	N/A	(Not Needed)	N/A	(Not Needed)	
ACTUAL AREA*	**9,942 S.F.**	OK	**2,630 S.F.**		
COMMON PATH OF EGRESS TRAVEL - *Sec 1006*	75'	OK	75'	OK	
EXIT ACCESS TRAVEL DISTANCE - *Table 1017.2*	250'	OK	250'	OK	4 EXITS PROVIDED AT 1/3 (FULLY SPRINKLED) THE DIAGONAL APART AT ALL LOCATION WHERE THE OCCUPANT LOAD EXCEEDS 49 PER 1007.1.1.
FIRE RESISTANCE RATING FOR BUILDING ELEMENTS -Table	0-Hour	OK 601	0-Hour	OK	
FIRE RESISTANCE RATING FOR EXTERIOR WALLS					
BASED ON FIRE SEPARATION DISTANCE - Table 602	10<X<30 = 0 HR X>30 = 0 HR	OK	10<X<30 = 0 HR X>30 = 0 HR	OK	
ALLOWABLE AREAS FOR OPENINGS - *Table 705.8*	UP 45%	OK	UP 45%	OK	

*MIXED USE RATIO CALCULATION CBC Section 508.4
(9942/24000) + ((2630)/ 38000) = .41+.06 = .47<1.0 COMPLIES

STORAGE IS UNDER 10% OF TOTAL SQUARE FOOTAGE AND DOESN'T NEED REQUIRE SEPARATION FROM OTHER SPACES

BIMcloud: archiserver - BIMcloud Basic for ARCHICAD 22/1869.00 Freedom HS Aux. Gym_CD:4/27/2021:1:26 PM

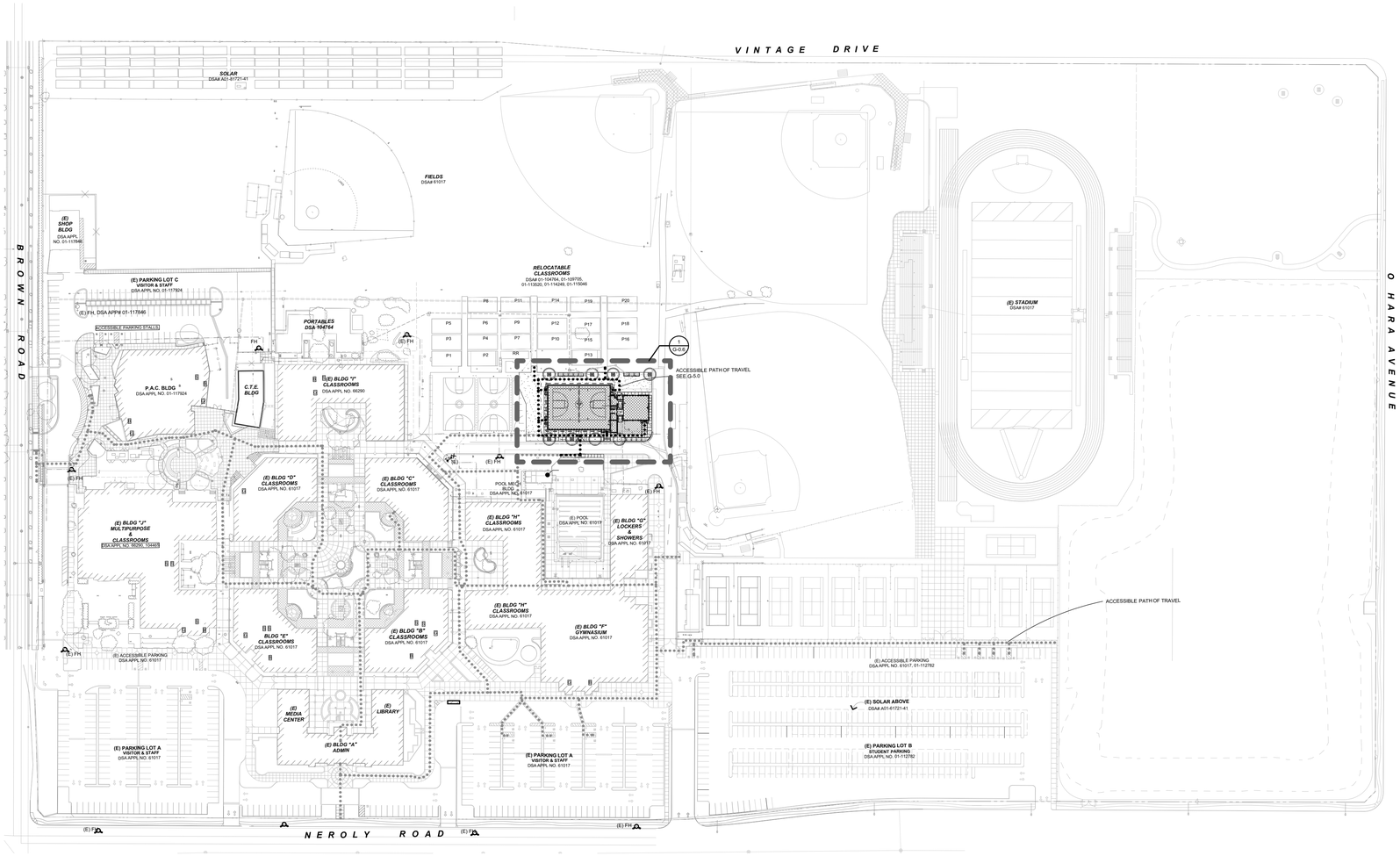

OVERALL SITE PLAN (1)

1" =100'

TRUE NORTH

200' 100' 50' 0

EXISTING ACCESSIBLE PATH OF TRAVEL

NEW ACCESSIBLE PATH OF TRAVEL

QUATTROCCHI KWOK ARCHITECTS

Main:
636 Fifth Street, Santa Rosa, CA 95404
East Bay:
55 Harrison Street, Suite 525,
Oakland, CA 94607
(707) 576-0829

LICENSED ARCHITECT
JIM THEISS
LICENSE # C22643
EXP JUNE 30, 2021
STATE OF CALIFORNIA

SIGNED: MAY 5, 2021

FREEDOM HIGH SCHOOL

NEW AUXILIARY GYMNASIUM

1050 NEROLY RD,
OAKLEY, CA 94561

LIBERTY UNION HIGH SCHOOL DISTRICT

DSA APP NO. 01-119278

ARCH PROJECT NO:	1869.00
DRAWN BY:	CH
DRAWING SCALE:	1" = 100'
PTN: 61721-78	FILE NO: 7-H4

BID DOCUMENT

APRIL 27, 2021

SHEET TITLE

OVERALL SITE PLAN

SHEET NUMBER

G-0.7

BIMcloud: archiserver - BIMcloud Basic for ARCHICAD 22/1869.00 Freedom HS Aux. Gym CD 4/27/2021;2:23 PM

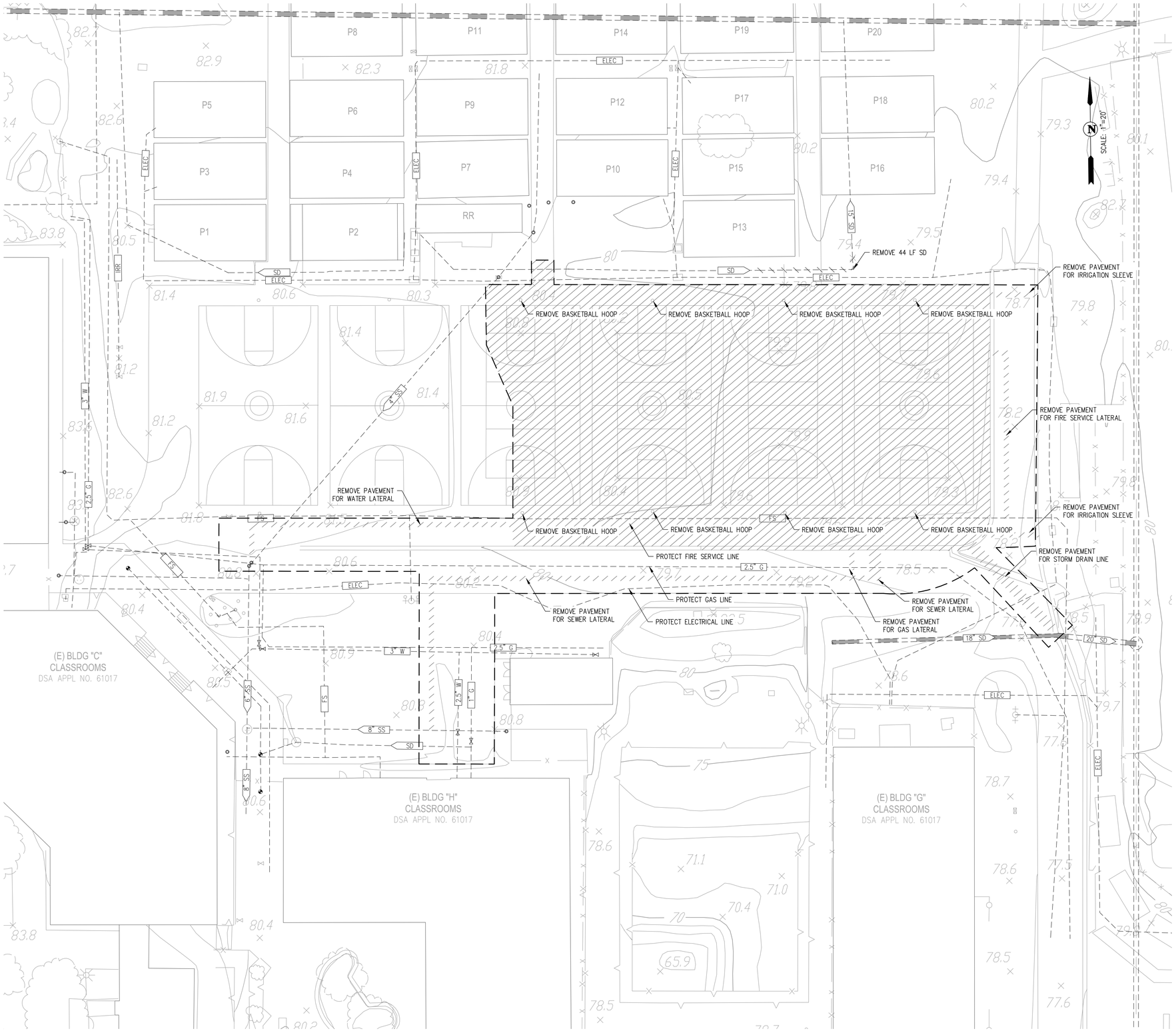

LEGEND

- LIMIT OF WORK
- REMOVE CONCRETE
- REMOVE AC
- 6" SS — EXISTING SANITARY SEWER
- 18" SD — EXISTING STORM DRAIN
- 12" W — EXISTING WATER
- 6" IRR — EXISTING IRRIGATION LINE
- COMM — EXISTING COMMUNICATION LINE
- ELEC — EXISTING ELECTRICAL LINE
- EXISTING INLET
- EXISTING MANHOLE
- EXISTING SSCO

NOTES:
1. SAWCUT CONCRETE ON NEAREST SCORE LINE.
2. PRIOR TO DEMOLITION OF IRRIGATION LINES, PROVIDE AND INSTALL IRRIGATION TO SUPPORT EXISTING TURF AND LANDSCAPING TO REMAIN. SEE LANDSCAPE DRAWINGS (IRRIGATION PLAN).

QUATTROCCHI KWOK ARCHITECTS
Main:
636 Fifth Street, Santa Rosa, CA 95404
East Bay:
55 Harrison Street, Suite 525,
Oakland, CA 94607
(707) 576-0829

cbg
SAN RAMON (925) 866-0322
ROSEVILLE (916)788-4456
WWW.CBANDG.COM
CIVIL ENGINEERS • SURVEYORS • PLANNERS

REGISTERED PROFESSIONAL ENGINEER
JASON D. VOGAN
59299
CIVIL
STATE OF CALIFORNIA

FREEDOM HIGH SCHOOL

NEW AUXILIARY GYMNASIUM

1050 NEROLY RD,
OAKLEY, CA 94561

LIBERTY UNION HIGH SCHOOL DISTRICT

REVISIONS

DSA APP NO. 01-119278

ARCH PROJECT NO: 1869.00
DRAWN BY:
DRAWING SCALE:
PTN: 61721-78 FILE NO: 7-H4

BID DOCUMENT

APRIL 27, 2021

SHEET TITLE

EXISTING CONDITIONS / DEMOLITION

SHEET NUMBER

C-1.0

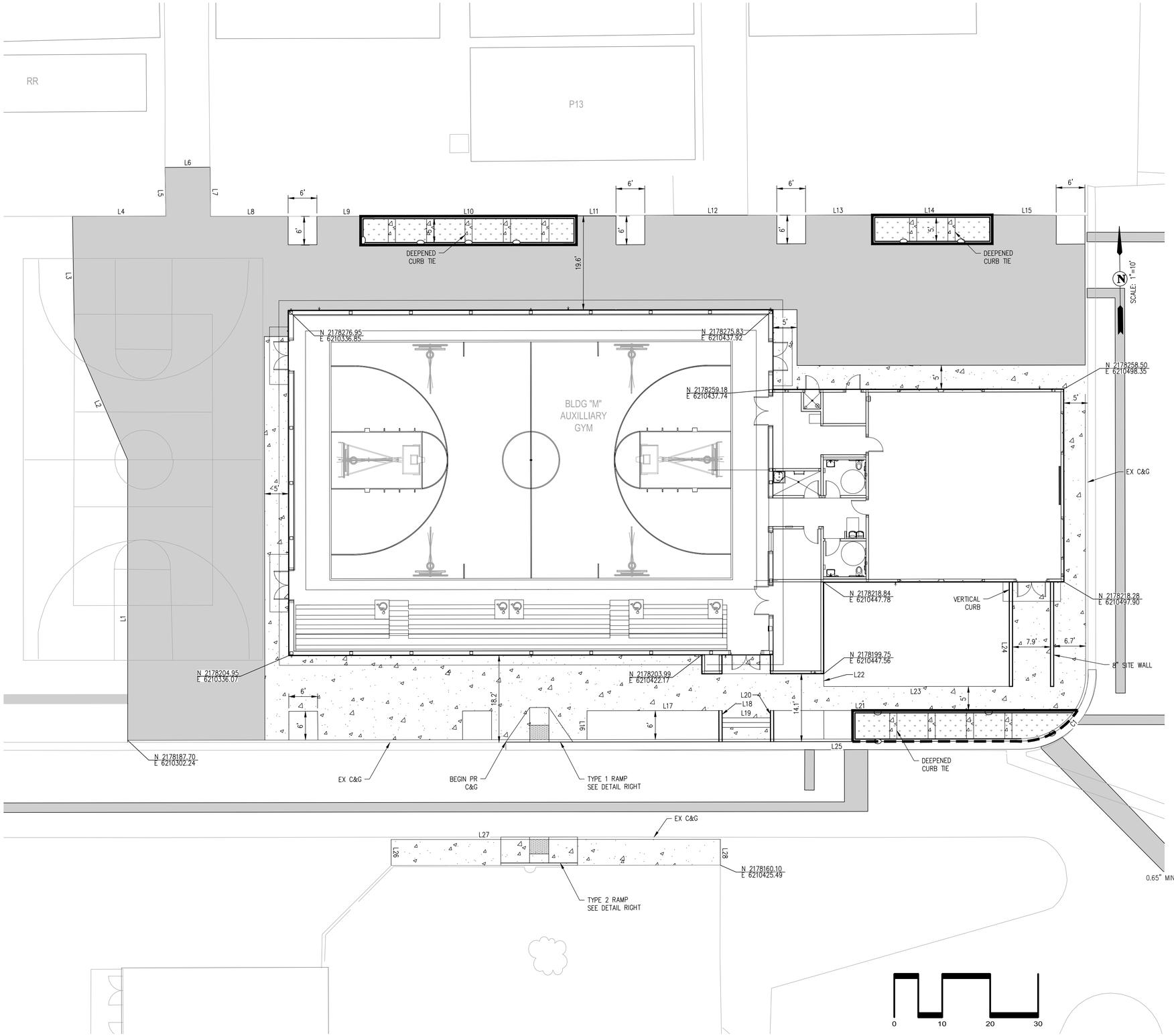

LEGEND

- AC PAVEMENT (2.5" AC OVER 9" CLASS II AB)
- CONCRETE SIDEWALK (SEE DETAIL C-2.1)
- CURB AND GUTTER
- CURB CUT (SEE BELOW)
- DEEPENED CURB AND GUTTER (SEE DETAIL C-2.1)
- DEEPENED VERTICAL CURB (SEE DETAIL C-2.1)

LINE TABLE		
NO	BEARING	LENGTH
L1	58.945	N00° 43' 15.83"E
L2	27.757	N22° 52' 36.47"W
L3	25.349	N00° 09' 44.70"W
L4	19.466	S89° 24' 53.29"E
L5	10.139	N00° 21' 09.03"W
L6	9.424	S89° 41' 27.27"E
L7	10.272	S00° 21' 35.94"W
L8	16.202	S89° 18' 41.69"E
L9	11.106	S89° 21' 31.45"E
L10	41.000	S89° 21' 06.41"E
L11	10.262	S89° 21' 06.41"E
L12	27.548	S89° 17' 17.63"E
L13	13.903	S89° 21' 06.41"E
L14	25.000	S89° 21' 06.41"E

LINE TABLE		
NO	BEARING	LENGTH
L15	13.360	S88° 52' 50.90"E
L16	6.012	N00° 40' 52.14"E
L17	28.173	N89° 19' 07.86"W
L18	1.500	S00° 37' 27.28"W
L19	10.073	N89° 19' 07.86"W
L20	1.500	S00° 37' 27.28"W
L21	63.433	N89° 19' 07.86"W
L22	2.668	S00° 41' 49.46"W
L23	38.706	N89° 18' 10.54"W
L24	21.791	S00° 40' 55.76"W
L25	107.474	S89° 22' 32.72"E
L26	5.418	S00° 40' 52.14"W
L27	68.650	S89° 19' 34.65"E
L28	5.399	S00° 40' 52.14"W

CURVE TABLE			
NO	RADIUS	DELTA	LENGTH
C1	13.98'	090°00'05"	21.96'

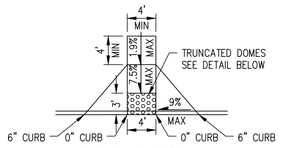

TYPE 1 RAMP
NOT TO SCALE

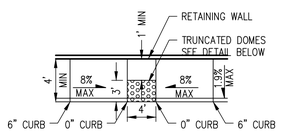

TYPE 2 RAMP
NOT TO SCALE

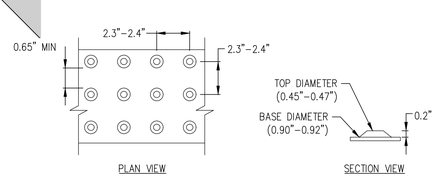

TYPICAL TRUNCATED DOME
DETAIL PER CBC 11B-705.1.1
COLOR TO BE YELLOW
NOT TO SCALE

QUATTROCCHI KWOK ARCHITECTS
Main:
636 Fifth Street, Santa Rosa, CA 95404
East Bay:
55 Harrison Street, Suite 525,
Oakland, CA 94607
(707) 576-0829

cbg
SAN RAMON (925) 866-0322
ROSEVILLE (916)788-4456
WWW.CBANDG.COM
CIVIL ENGINEERS • SURVEYORS • PLANNERS

REGISTERED PROFESSIONAL ENGINEER
JASON D. VOGANT
59299
CIVIL
STATE OF CALIFORNIA

FREEDOM HIGH SCHOOL

NEW AUXILIARY GYMNASIUM

1050 NEROLY RD,
OAKLEY, CA 94561

LIBERTY UNION HIGH SCHOOL DISTRICT

REVISIONS

DSA APP NO. 01-119278

ARCH PROJECT NO: 1869.00

DRAWN BY:

DRAWING SCALE:

PTN: 61721-78 FILE NO: 7-H4

BID DOCUMENT

APRIL 27, 2021

SHEET TITLE

HORIZONTAL CONTROL PLAN

SHEET NUMBER

C-2.0

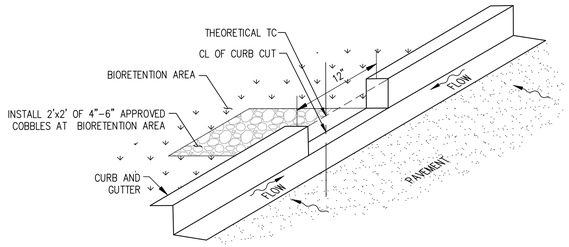

CURB CUT DETAIL

NOT TO SCALE

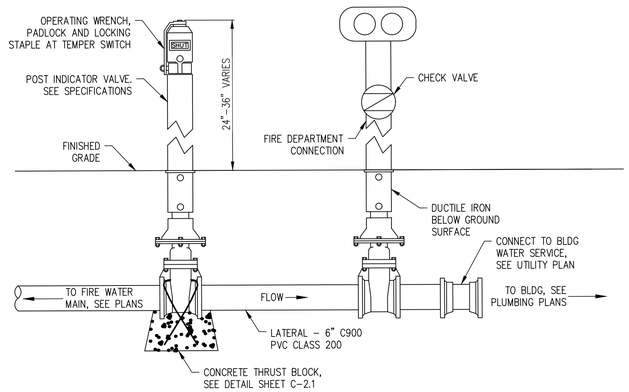

POST INDICATOR VALVE & FIRE DEPARTMENT CONNECTION

NOT TO SCALE

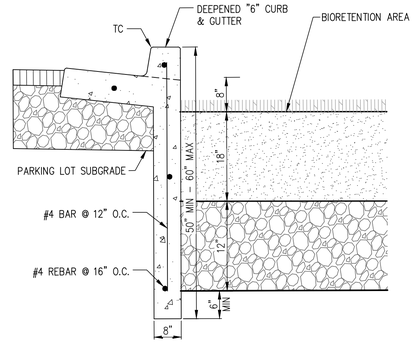

6" DEEPENED CURB & GUTTER

NOT TO SCALE

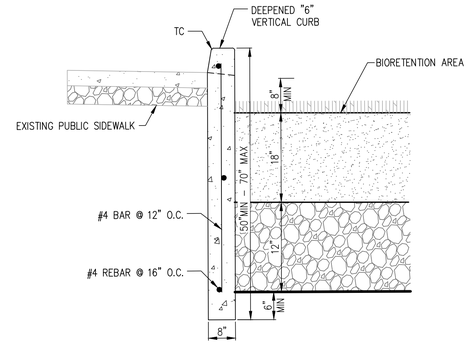

6" DEEPENED VERTICAL CURB

NOT TO SCALE

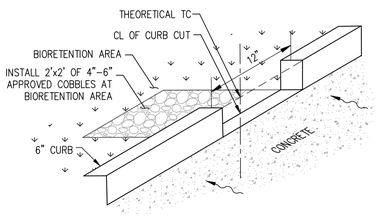

PEDESTRIAN CURB CUT DETAIL

NOT TO SCALE

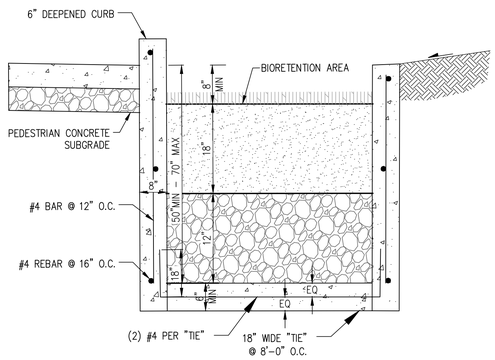

DEEPENED VERTICAL CURB WITH TIE

NOT TO SCALE

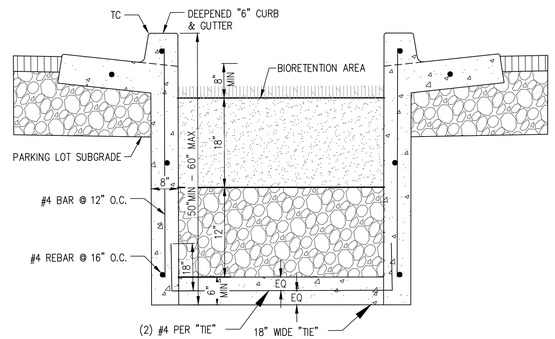

6" DEEPENED CURB & GUTTER WITH TIE

NOT TO SCALE

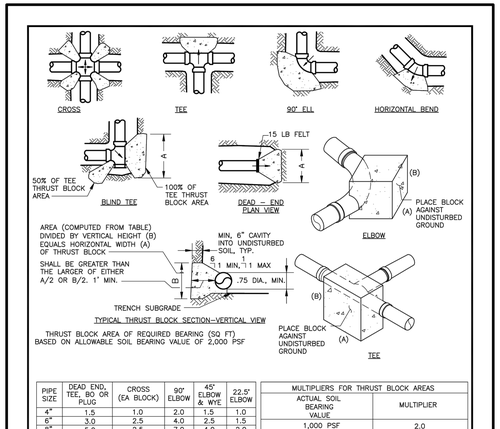

PIPE SIZE	DEAD END, TEE, BO OR PLUG	CROSS (EA BLOCK)	90° ELBOW	45° ELBOW & WYE	22.5° ELBOW
4"	1.5	1.0	2.0	1.5	1.0
6"	3.0	2.5	4.0	2.5	1.5
8"	5.0	2.5	7.0	4.0	2.0
10"	7.5	4.0	10.5	6.0	3.0
12"	10.5	5.5	15.0	8.0	4.5
14"	14.0	7.0	20.0	11.0	5.5
16"	18.0	9.0	25.5	14.0	7.0
18"	22.5	11.5	32.0	17.5	9.0
20"	27.5	14.0	39.0	21.0	11.0
24"	39.5	20.0	55.5	30.5	15.5

MULTIPLIERS FOR THRUST BLOCK AREAS

ACTUAL SOIL BEARING VALUE	MULTIPLIER
1,000 PSF	2.0
1,500 PSF	1.33
2,000 PSF	1.0
2,500 PSF	0.8
3,000 PSF	0.67

EXAMPLE:
ACTUAL SOIL BEARING VALUE = 1,000 PSF FOR 8" BLOW OFF
REQUIRED AREA IS: (2.0)(5.0 SQ FT) = 10.0 SQ FT

NOTES:
1. THRUST BLOCKS SHALL BE CLASS B CONCRETE (5 SACK MIX)
2. MAXIMUM TEST PRESSURE = 150 PSI
3. THRUST BLOCK HORIZONTAL WIDTH (A) SHALL BE AT LEAST TWICE THE VERTICAL HEIGHT (B)
4. TOP OF THRUST BLOCK SHALL NOT BE PLACED WITHIN 2' OF FINISHED GRADE.
5. REFER TO SPEC SECTIONS 03100 AND 03304.

DIABLO WATER DISTRICT

STANDARD DRAWING
CONCRETE THRUST BLOCKS

DESIGNED WDB DRAWN WKT APPROVED WW DATE JUNE, 2019 DWG. NO. DWD 2

C:\ZDWIN\ALBOTWK\D2827270.DWD D2.DWG TALBOTWK 8/24/2019 11:11 AM

MUST ADDITIONALLY REFER TO NFPA 24 TABLE A10.6.1(b)

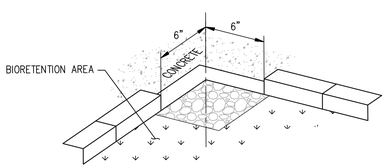

PEDESTRIAN CORNER CURB CUT DETAIL

NOT TO SCALE

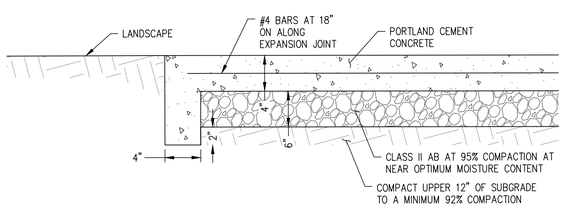

PEDESTRIAN CONCRETE PAVEMENT SECTION

NOT TO SCALE

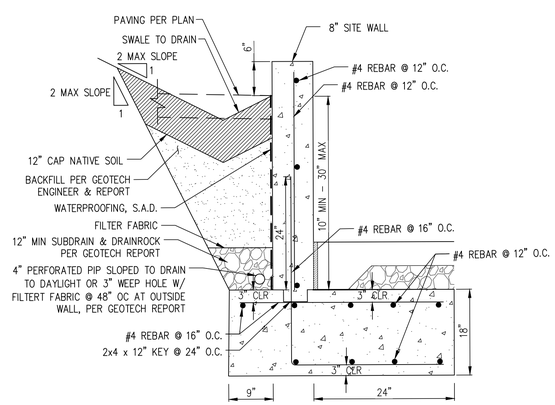

8" SITE WALL WITH FOOTING

NOT TO SCALE

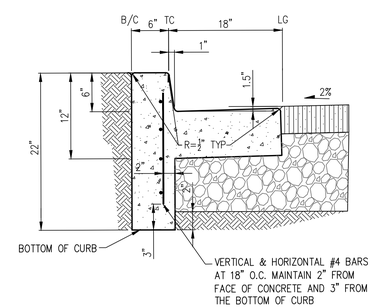

6" VERTICAL CURB AND GUTTER DETAIL

NOT TO SCALE

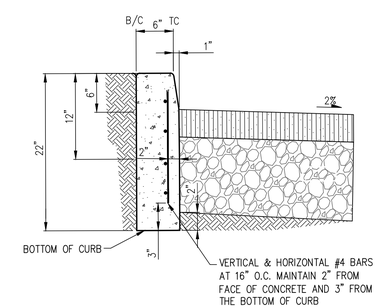

6" VERTICAL CURB DETAIL

NOT TO SCALE

QUATTROCCHI KWOK ARCHITECTS
Main:
636 Fifth Street, Santa Rosa, CA 95404
East Bay:
55 Harrison Street, Suite 525,
Oakland, CA 94607
(707) 576-0829

cbg
SAN RAMON (925) 866-0322
ROSEVILLE (916)788-4456
WWW.CBANDG.COM
CIVIL ENGINEERS • SURVEYORS • PLANNERS

REGISTERED PROFESSIONAL ENGINEER
JASON D. VOGAN
59299
CIVIL
STATE OF CALIFORNIA

FREEDOM HIGH SCHOOL

NEW AUXILIARY GYMNASIUM

1050 NEROLY RD,
OAKLEY, CA 94561

LIBERTY UNION HIGH SCHOOL DISTRICT

REVISIONS

DSA APP NO. 01-119278
ARCH PROJECT NO: 1869.00
DRAWN BY:
DRAWING SCALE:
PTN: 61721-78 FILE NO: 7-H4

BID DOCUMENT

APRIL 27, 2021

SHEET TITLE

DETAILS

SHEET NUMBER

C-2.1

STORM DRAIN PIPE SCHEDULE	
STRUCTURE	DESCRIPTION
4" PERFORATED PIPE	264 LF PVC
12" PIPE	79 LF HDPE
15" PIPE	55 LF HDPE

STORM DRAIN STRUCTURE SCHEDULE	
STRUCTURE	DESCRIPTION
BUBBLE UP (2 TOTAL)	NDS POP-UP DRAINAGE EMITTER
FIELD INLET (4 TOTAL)	OLDCASTLE PRECAST CB1818

SANITARY SEWER PIPE SCHEDULE	
STRUCTURE	DESCRIPTION
4" PIPE	299 LF, PVC SDR 35

SANITARY SEWER STRUCTURE SCHEDULE	
STRUCTURE	DESCRIPTION
SSCO (3 TOTAL)	PER CITY OF BRENTWOOD STANDARD SS-1

WATER PIPE SCHEDULE	
STRUCTURE	DESCRIPTION
2" PIPE	295 LF PVC
6" PIPE	166 LF PVC

WATER STRUCTURE SCHEDULE	
STRUCTURE	DESCRIPTION
GATE VALVE (1 TOTAL)	6" MUELLER GATE VALVE #A-2360
PVI (1 TOTAL)	MUELLER A-20801 PER CITY OF BRENTWOOD STANDARDS W-4
FIRE DEPT. CONNECTION (1 TOTAL)	CROKER 6545 4-WAY FDC

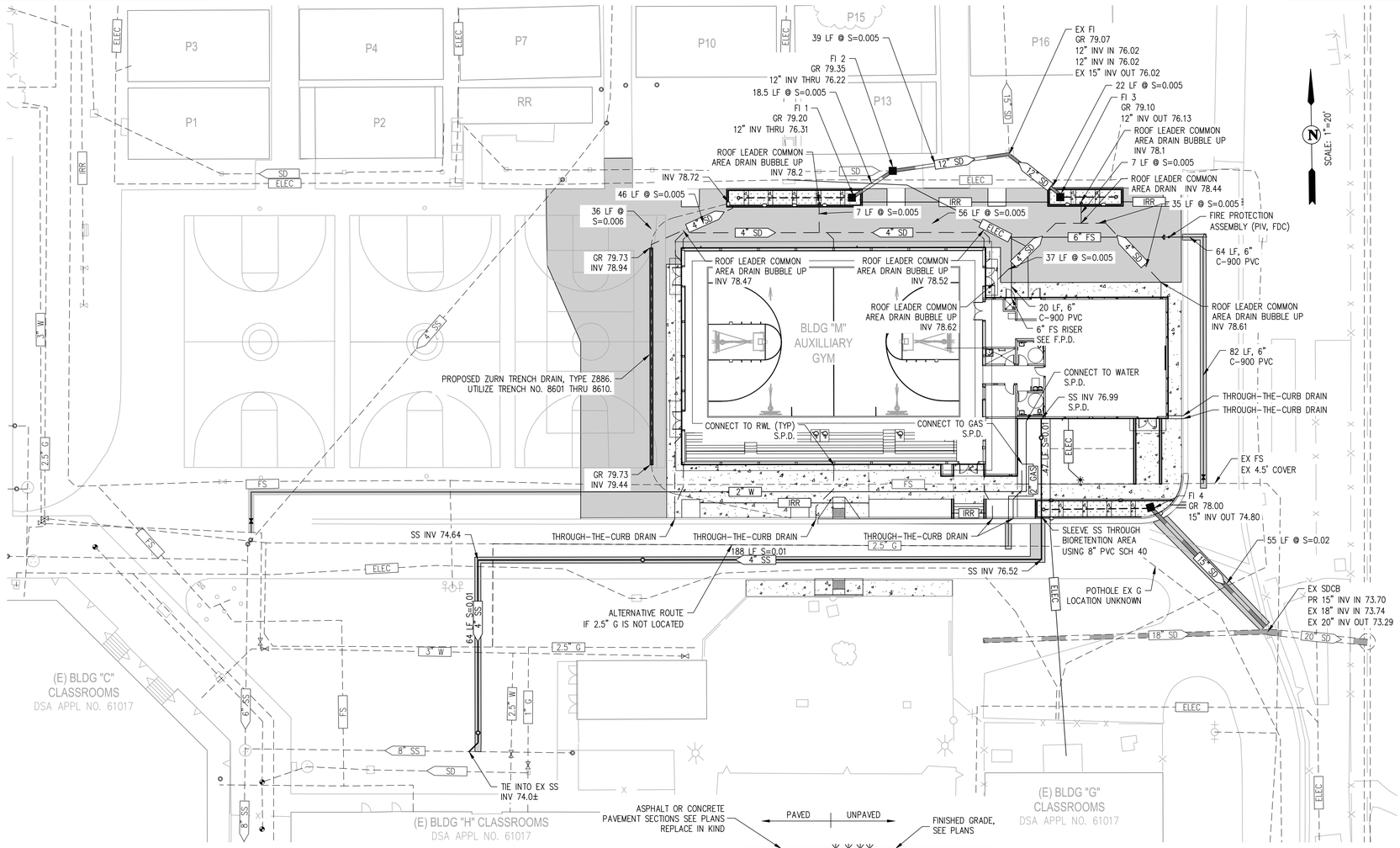

NOTE

EXISTING IRRIGATION TO REMAIN IN SERVICE. ALL DAMAGED TURF TO BE REPLACED WITH SOD

LEGEND

- AC PAVEMENT
- CONCRETE SIDEWALK/GUTTER
- BIO-RETENTION AREA
- 15" SD — PROPOSED STORM DRAIN
- 4" SD — PROPOSED PERFORATED STORM DRAIN
- 4" SS — PROPOSED SEWER LATERAL
- 2" W — PROPOSED WATER LATERAL
- 4" FS — PROPOSED FIRE SERVICE
- IRR — IRRIGATION SLEEVE – SEE LANDSCAPE PLANS
- RAIN WATER LEADER / COMMON AREA DRAIN
- PROPOSED TRUST BLOCK – SEE SHEET C-2.1
- PIV
- FDC
- PROPOSED MANHOLE
- PROPOSED CATCH BASIN
- BUBBLE UP (SEE DETAIL ON SHEET C-4.0)
- PROPOSED SD OR SS CLEANOUT
- PROPOSED CURB CUT
- PROPOSED STREET LIGHT, SEE ELECTRICAL PLANS
- 8" SS — EXISTING SEWER
- 18" SD — EXISTING STORM DRAIN
- 12" W — EXISTING WATER
- 6" IRR — EXISTING IRRIGATION
- EXISTING FIELD INLET
- EXISTING MANHOLE

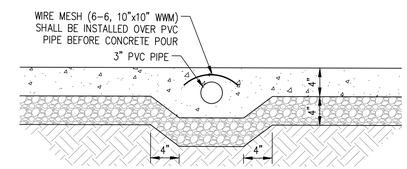

SECTION A

NOT TO SCALE

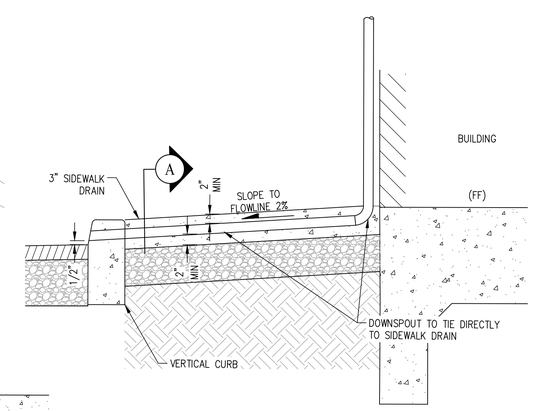

DOWNSPOUT TO SIDEWALK THROUGH- THE-CURB DETAIL

NOT TO SCALE

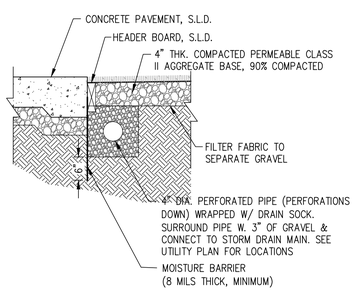

SYNTHETIC TURF

NOT TO SCALE

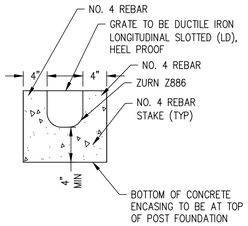

TRENCH DRAIN ENCASING

NOT TO SCALE

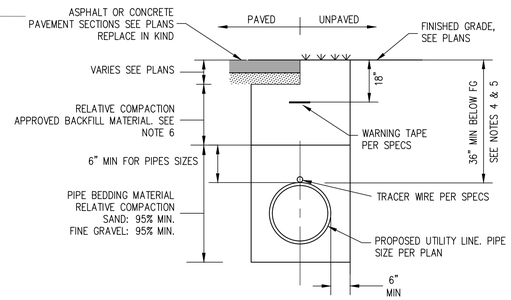

NOTES:

1. BEDDING SHOULD EXTEND A MINIMUM D/4 (D=OUTSIDE PIPE DIAMETER) BELOW BOTTOM OF PIPE.
2. SEE PROJECT SPECIFICATIONS FOR FURTHER UTILITY TRENCH REQUIREMENTS.
3. WHERE TRENCHES EXCEED 5' DEEP, CONTRACTOR TO CONFORM TO CURRENT OSHA REQUIREMENTS FOR SHORING, SLOPING, AND WORKING SAFELY.
4. COVER FOR PAVED AREAS IS DEFINED FROM TOP OF PIPE TO BOTTOM OF AGGREGATE BASE.
5. COVER FOR UNPAVED AREAS IS DEFINED FROM TOP OF PIPE TO TOP OF FINISHED SURFACE.
6. THE RELATIVE COMPACTION FOR APPROVED NATIVE MATERIAL, IMPORTED FILL, AND CALTRANS CLASS II AGGREGATE BASE SHALL BE AS FOLLOW:
   PAVED AREAS: 95% MINIMUM
   NON-PAVED AREAS: 90% MINIMUM

FIRE WATER TRENCH DETAIL

NOT TO SCALE

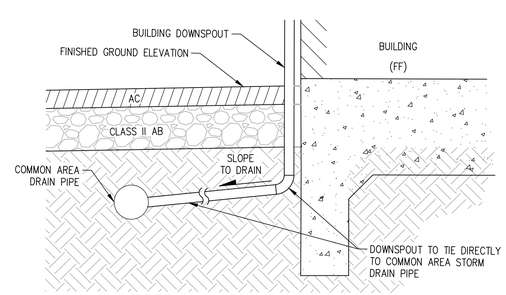

DOWNSPOUT TO COMMON AREA CONNECTION DETAIL

NOT TO SCALE

0 20 40 60

QUATTROCCHI KWOK ARCHITECTS
Main:
636 Fifth Street, Santa Rosa, CA 95404
East Bay:
55 Harrison Street, Suite 525,
Oakland, CA 94607
(707) 576-0829

cbg
SAN RAMON (925) 866-0322
ROSEVILLE (916)788-4456
WWW.CBANDG.COM
CIVIL ENGINEERS • SURVEYORS • PLANNERS

REGISTERED PROFESSIONAL ENGINEER JASON D. VOGAN 59299 CIVIL STATE OF CALIFORNIA

FREEDOM HIGH SCHOOL

NEW AUXILIARY GYMNASIUM

1050 NEROLY RD,
OAKLEY, CA 94561

LIBERTY UNION HIGH SCHOOL DISTRICT

REVISIONS

DSA APP NO. 01-119278

ARCH PROJECT NO: 1869.00

DRAWN BY:

DRAWING SCALE:

PTN: 61721-78 FILE NO: 7-H4

BID DOCUMENT

APRIL 27, 2021

SHEET TITLE

UTILITY PLAN

SHEET NUMBER

C-3.0

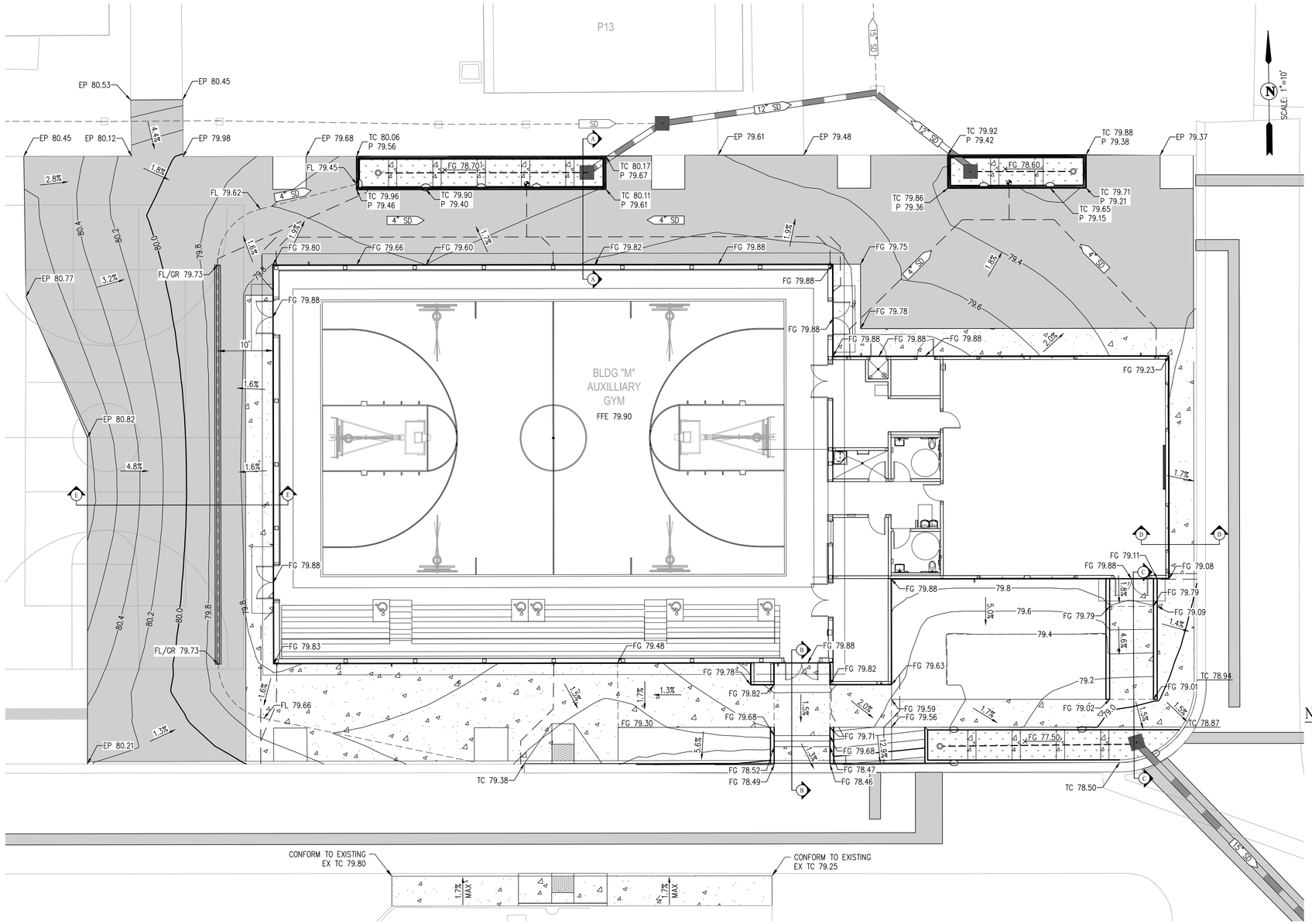

LEGEND

- AC PAVEMENT
- CONCRETE SIDEWALK/GUTTER
- BIO-RETENTION AREA
- 15" SD — PROPOSED STORM DRAIN
- PROPOSED PERFORATED STORM DRAIN (BIORETENTION AREA)
- RAIN WATER LEADER / COMMON AREA DRAIN
- PROPOSED MANHOLE
- PROPOSED CATCH BASIN
- AREA DRAIN
- PROPOSED SD CLEANOUT
- PROPOSED CURB CUT
- 18" SD — EXISTING STORM DRAIN
- EXISTING FIELD INLET
- EXISTING MANHOLE

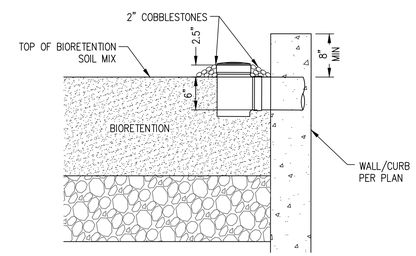

NDS POP-UP DRAINAGE EMITTER - (OR APPROVED EQUIVALENT)
AT BIORETENTION PLANTERS
NOT TO SCALE

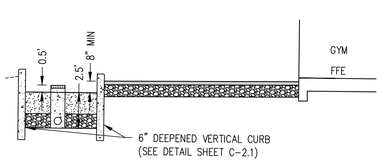

A-A DETAIL
NOT TO SCALE

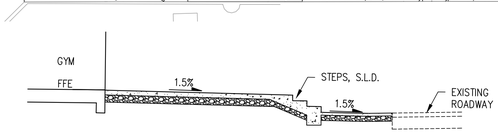

B-B DETAIL
NOT TO SCALE

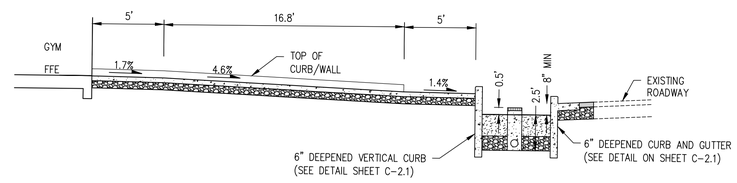

C-C DETAIL
NOT TO SCALE

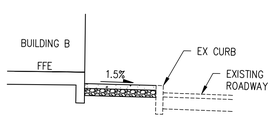

D-D DETAIL
NOT TO SCALE

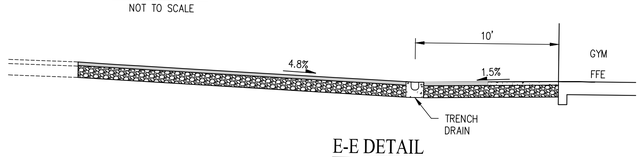

E-E DETAIL
NOT TO SCALE

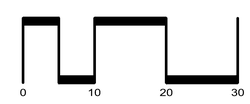

QUATTROCCHI KWOK
ARCHITECTS
Main:
636 Fifth Street, Santa Rosa, CA 95404
East Bay:
55 Harrison Street, Suite 525,
Oakland, CA 94607
(707) 576-0829

cbg
SAN RAMON (925) 866-0322
ROSEVILLE (916)788-4456
WWW.CBANDG.COM
CIVIL ENGINEERS • SURVEYORS • PLANNERS

REGISTERED PROFESSIONAL ENGINEER
JASON D. VOGAN
59299
CIVIL
STATE OF CALIFORNIA

FREEDOM HIGH SCHOOL

NEW AUXILIARY GYMNASIUM

1050 NEROLY RD,
OAKLEY, CA 94561

LIBERTY UNION
HIGH SCHOOL
DISTRICT

REVISIONS

DSA APP NO. 01-119278

ARCH PROJECT NO: 1869.00
DRAWN BY:
DRAWING SCALE:
PTN: 61721-78 FILE NO: 7-H4

BID DOCUMENT

APRIL 27, 2021

SHEET TITLE

GRADING AND DRAINAGE PLAN

SHEET NUMBER

C-4.0

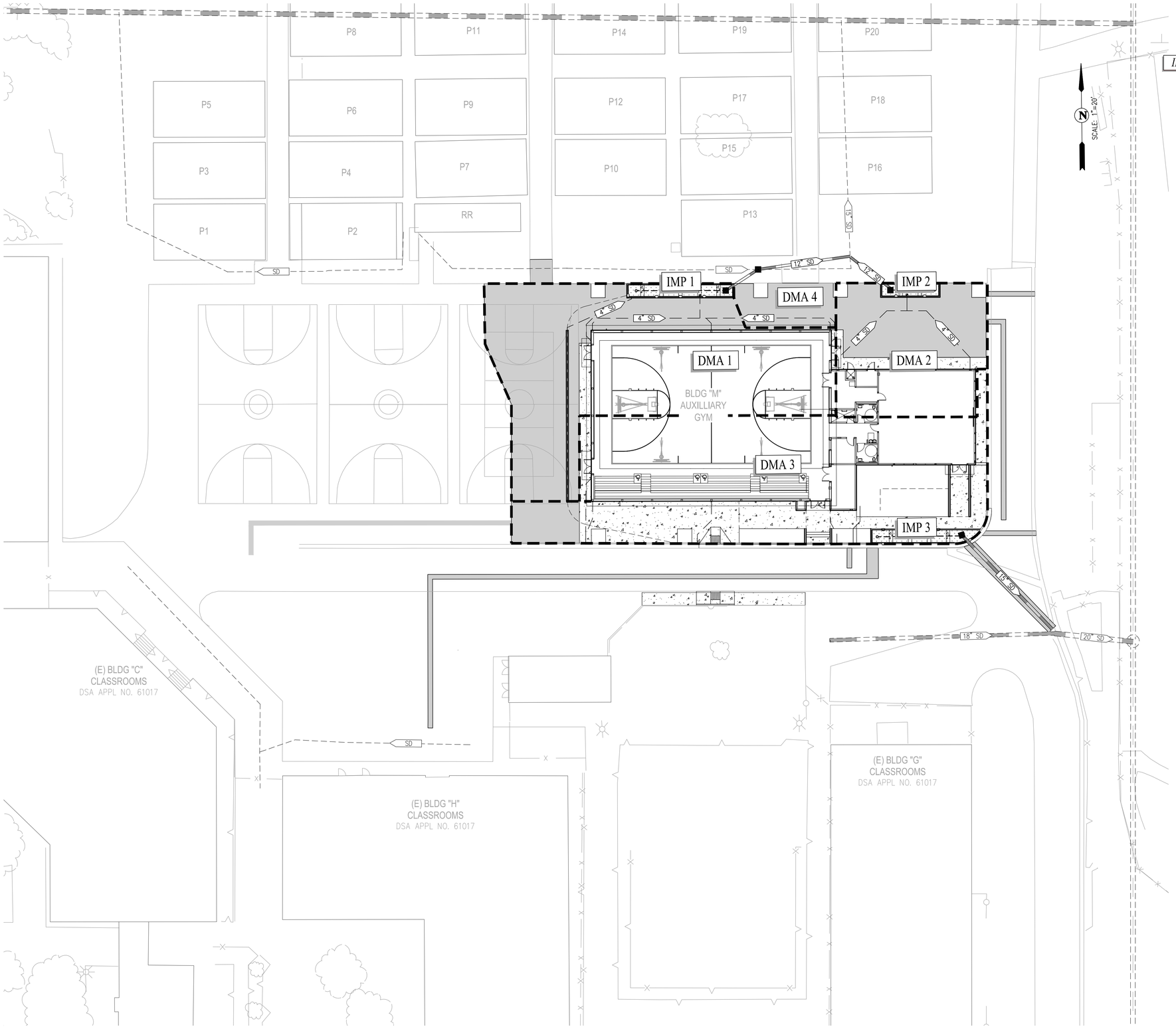

LEGEND

- AC PAVEMENT
- CONCRETE SIDEWALK/GUTTER
- IMP 1 — INTEGRATED MANAGEMENT PRACTICE: BIO-RETENTION AREA
- 15" SD — PROPOSED STORM DRAIN
- 4" SD — PROPOSED PERFORATED STORM DRAIN
- RAIN WATER LEADER / COMMON AREA DRAIN
- PROPOSED MANHOLE
- PROPOSED CATCH BASIN
- AREA DRAIN
- PROPOSED SD CLEANOUT
- PROPOSED CURB CUT
- 18" SD — EXISTING STORM DRAIN
- EXISTING FIELD INLET
- EXISTING MANHOLE
- DRAINAGE MANAGEMENT AREA BOUNDARY
- DMA 1 — DRAINAGE MANAGEMENT AREA DRAINING TO PARKING INFILTRATION TRENCH AREA OR BIO-RETENTION AREA

BIORETENTION AREAS

DMA	PROVIDED TREATMENT AREA (SF)
1	220
2	120
3	229
TOTAL	569

0 20 40 60

QUATTROCCHI KWOK ARCHITECTS
Main:
636 Fifth Street, Santa Rosa, CA 95404
East Bay:
55 Harrison Street, Suite 525,
Oakland, CA 94607
(707) 576-0829

cbg
SAN RAMON (925) 866-0322
ROSEVILLE (916)788-4456
WWW.CBANDG.COM
CIVIL ENGINEERS • SURVEYORS • PLANNERS

REGISTERED PROFESSIONAL ENGINEER
JASON D. VOGAN
59299
CIVIL
STATE OF CALIFORNIA

FREEDOM HIGH SCHOOL

NEW AUXILIARY GYMNASIUM

1050 NEROLY RD,
OAKLEY, CA 94561

LIBERTY UNION HIGH SCHOOL DISTRICT

REVISIONS

DSA APP NO. 01-119278

ARCH PROJECT NO: 1869.00
DRAWN BY:
DRAWING SCALE:
PTN: 61721-78 FILE NO: 7-H4

BID DOCUMENT

APRIL 27, 2021

SHEET TITLE

STORMWATER CONTROL PLAN

SHEET NUMBER

C-5.0

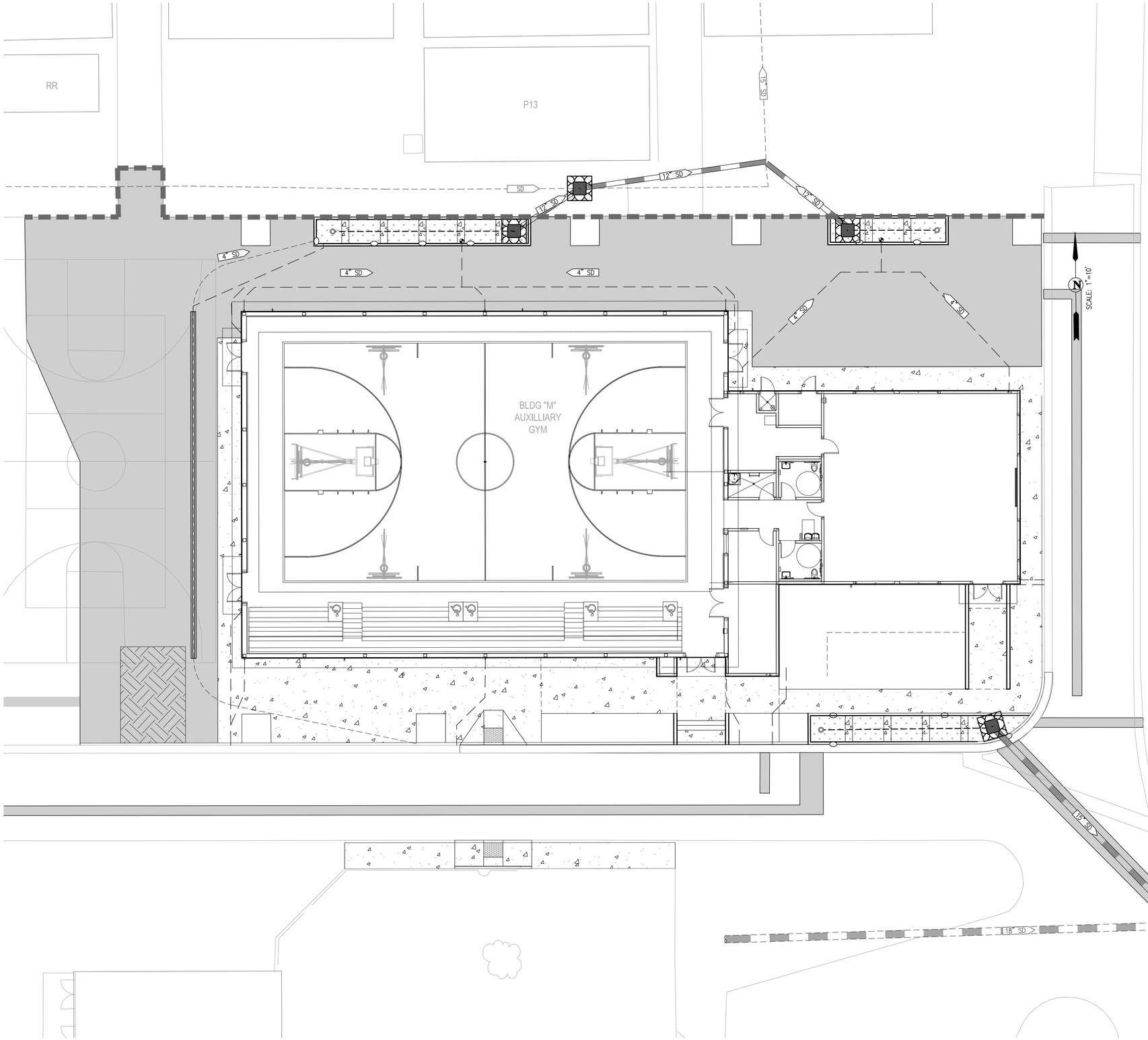

WDID #:

GENERAL NOTES:

1. LEGALLY RESPONSIBLE PARTY/PERSON (LRP) OWNER/SUBDIVIDER: LIBERTY UNION HIGH SCHOOL DISTRICT
850 2ND STREET
BRENTWOOD, CA 94513

2. CIVIL ENGINEER: CARLSON, BARBEE & GIBSON, INC.
2633 CAMINO RAMON, SUITE 350
SAN RAMON, CA 94583
(925) 866-0322
JASON VOGAN, RCE 59299

3. GEOTECHNICAL ENGINEER: BSK ASSOCIATES
399 LINDBERGH AVENUE
LIVERMORE, CA 94551
(925) 315-3151
CARRIE FOULK

LEGEND

- DIRECTION OF FLOW WITH STORM DRAIN INSTALLED
- FIELD INLET PROTECTION – (SE-10)
- CURB INLET PROTECTION – (SE-10)
- FIBER ROLL – (SE-5)
- STABILIZED CONSTRUCTION ENTRANCE/EXIT – (TC-1)
- FIELD INLET
- CURB CUT
- 15" SD — PROPOSED STORM DRAIN
- 18" SD / 8" SD — EXISTING STORM DRAIN

NOTE:

* STORMWATER DISCHARGE SAMPLING LOCATIONS ARE SUBJECT TO CHANGE AND WILL BE REMOVED, RELOCATED OR ADDED AT THE QSP'S DISCRETION.

APPLICABLE (BUT NOT LIMITED TO) CURRENT CASQA STORMWATER BMP CONSTRUCTION HANDBOOK

EC-1	SCHEDULING
EC-3	HYDROMULCH
EC-4	HYDROSEED
NS-1	WATER CONSERVATION PRACTICES
NS-2	DEWATERING OPERATIONS
NS-3	PAVING & GRINDING OPERATIONS
NS-8	VEHICLE & EQUIPMENT CLEANING
NS-9	VEHICLE & EQUIPMENT FUELING
NS-10	VEHICLE & EQUIPMENT MAINTENANCE
NS-12	CONCRETE CURING
NS-13	CONCRETE FINISHING
SE-1	SILT FENCE
SE-4	CHECK DAMS
SE-5	FIBER ROLLS
SE-10	DI PROTECTION TYPE 1
SE-10	DI PROTECTION TYPE 2
SE-10	DI PROTECTION TYPE 3
TC-1	STABILIZED CONSTRUCTION ENTRANCE/EXIT
TC-2	STABILIZED CONSTRUCTION ROADWAY
TC-3	ENTRANCE & OUTLET TIRE WASH
WE-1	WIND EROSION CONTROL
WM-1	MATERIAL DELIVERY & STORAGE
WM-2	MATERIAL USE
WM-3	STOCKPILE MANAGEMENT
WM-8	CONCRETE WASTE MANAGEMENT
WM-9	SANITARY/SEPTIC WASTE MANAGEMENT

0 10 20 30

QUATTROCCHI KWOK ARCHITECTS
Main:
636 Fifth Street, Santa Rosa, CA 95404
East Bay:
55 Harrison Street, Suite 525,
Oakland, CA 94607
(707) 576-0829

cbg
SAN RAMON (925) 866-0322
ROSEVILLE (916)788-4456
WWW.CBANDG.COM
CIVIL ENGINEERS • SURVEYORS • PLANNERS

REGISTERED PROFESSIONAL ENGINEER
JASON D. VOGAN
59299
CIVIL
STATE OF CALIFORNIA

FREEDOM HIGH SCHOOL

NEW AUXILIARY GYMNASIUM

1050 NEROLY RD,
OAKLEY, CA 94561

LIBERTY UNION HIGH SCHOOL DISTRICT

REVISIONS

DSA APP NO. 01-119278

ARCH PROJECT NO: 1869.00

DRAWN BY:

DRAWING SCALE:

PTN: 61721-78 FILE NO: 7-H4

BID DOCUMENT

APRIL 27, 2021

SHEET TITLE

EROSION CONTROL PLAN

SHEET NUMBER

C-6.0

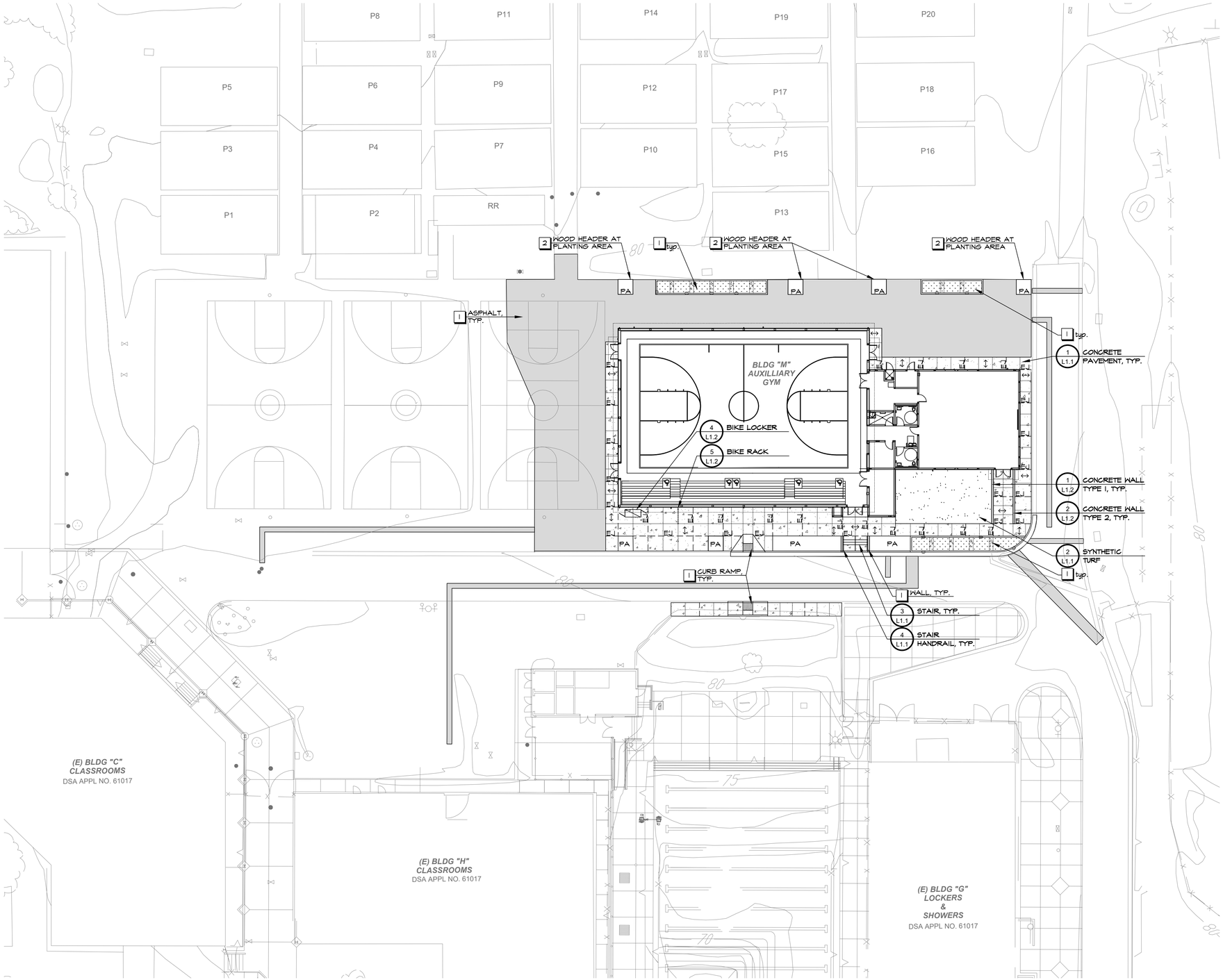

Existing features and topographic information have been taken from a Survey provided by CBG, dated September 17, 2020. GSM landscape architects, Inc. assumes no liability, real or alleged, regarding the accuracy of existing features or topographic information shown.

KEY NOTES

1. See Civil Drawings
2. Wood Header. See Planting Details on Sheet L4.1.

MATERIAL LEGEND

- Concrete Pavement. Concrete shall have a slip resistant broom finish in the direction shown on this sheet.
- Asphalt Pavement. See Civil Drawings.
- Synthetic Turf. Synthetic turf shall be Nutmeg Premium (or approved equal), with Rounded Silica Granules infill, as available through FieldTurf. Contact Charles Colletti, FieldTurf, 858.208.8449, Charles.colletti@fieldturfcommercial.com. See Civil Drawings for Base and Drainage.
- Biofiltration Facilities. See Civil Drawings.
- Concrete Wall. See plan for type.
- Handrail
- EJ Expansion Joint. See Civil Drawings.
- Tooled Control Joint. See Civil Drawings.
- ↔ Direction of broom finish
- PA Planting Area. See L4.0.

CONCRETE NOTES

1. Subgrade preparation shall be done in accordance with the recommendations in the Geotechnical Report.
2. Tooled control joints shall run continuously and extend through integral curbs and thickened edges. Tooled control joint layout shall be as shown on the Layout Plan, and coincide with the corners of objects, structures and the beginning and ends of curves. Joints should have a minimum depth of 25% of the slab thickness, unless otherwise noted on plans.
3. Expansion joints shall be laid out as shown on the Layout Plan.
4. Contractor shall place 3/8" asphalt impregnated fiber board where new concrete meets building, walls, curbs and planters.
5. The base rock layer, prior to placement of concrete, shall be sprinkled with clean water several times to restore any moisture that may have been lost after completion of compaction.
6. Cure concrete with curing compound or keep continuously moist for a minimum of 7 days.
7. Contractor shall prepare a 4'x4' sample of all flatwork and 4' length of all walls and curb in the field prior to construction, for review and approval by the District.
8. Concrete pavement with slopes less than 6% shall receive a medium broom finish and slopes greater than 6% shall receive a heavy broom finish. Finish shall be in the direction shown on this sheet.

QUATTROCCHI KWOK ARCHITECTS
Main:
636 Fifth Street, Santa Rosa, CA 95404
East Bay:
55 Harrison Street, Suite 525,
Oakland, CA 94607
(707) 576-0829

GSM landscape architects, inc.
1700 Soscol Ave. Suite 23
Napa, CA 94559
707-255-4630
www.gsmlainc.com

REGISTERED LANDSCAPE ARCHITECT
STEPHEN STRANZL
No. 2790
Exp. 10-31-22
STATE OF CALIFORNIA

FREEDOM HIGH SCHOOL

NEW AUXILIARY GYMNASIUM

1050 NEROLY RD,
OAKLEY, CA 94561

LIBERTY UNION HIGH SCHOOL DISTRICT

REVISIONS

DSA APP NO. 01-119278

ARCH PROJECT NO:	1869.00
DRAWN BY:	BTI, HDJ
DRAWING SCALE:	1"=20'-0"
PTN: 61721-0068	FILE NO: 7-H4

BID DOCUMENT

APRIL 27, 2021

SHEET TITLE

MATERIAL AND DETAIL REFERENCE PLAN

SHEET NUMBER

L1.0

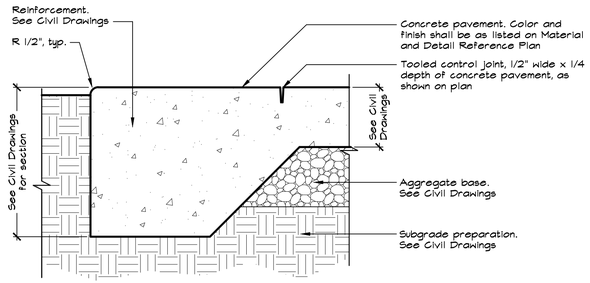

NOTES:

1. See Concrete Notes on the Material and Detail Reference Plan.
2. See Material and Detail Reference Plan for concrete color and finish.
3. See Material and Detail Reference Plan for tooled control joint and expansion joint locations.
4. See Civil Drawings for grading and drainage design and information.

1 CONCRETE PAVEMENT
NOT TO SCALE

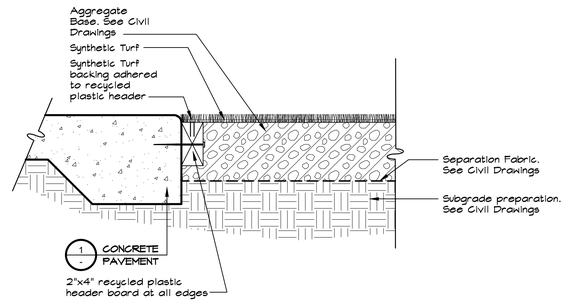

2 SYNTHETIC TURF
NOT TO SCALE

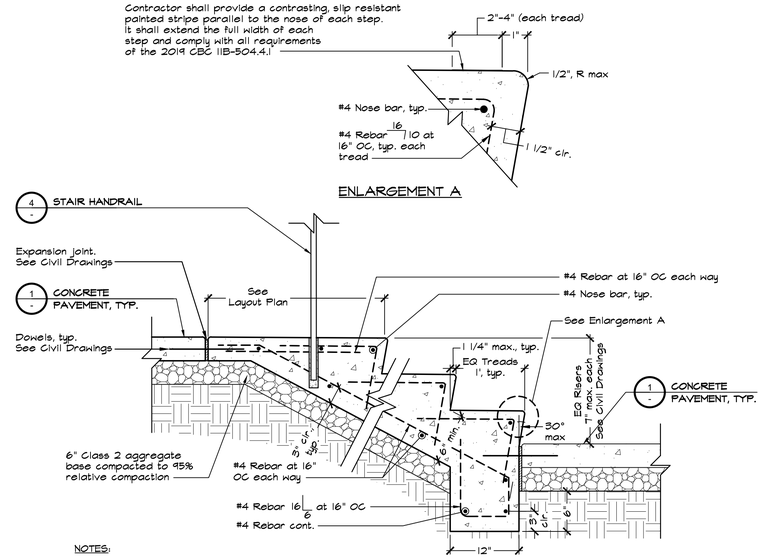

NOTES:

1. See Concrete Notes on the Material and Detail Reference Plan in addition to requirements in the Specifications.
2. Concrete shall be uncolored concrete with a medium broom finish on all sides and parallel with concrete stairs.
3. Contractor shall submit paint samples that provide 70% contrast with concrete color and with slip resistant finish to the District for review and approval.
4. Contractor shall comply with all requirements of the 2019 CBC 11B-504.4.1
5. See Structural Drawings for lap splice requirements and hook/bend information.

3 STAIRS
NOT TO SCALE

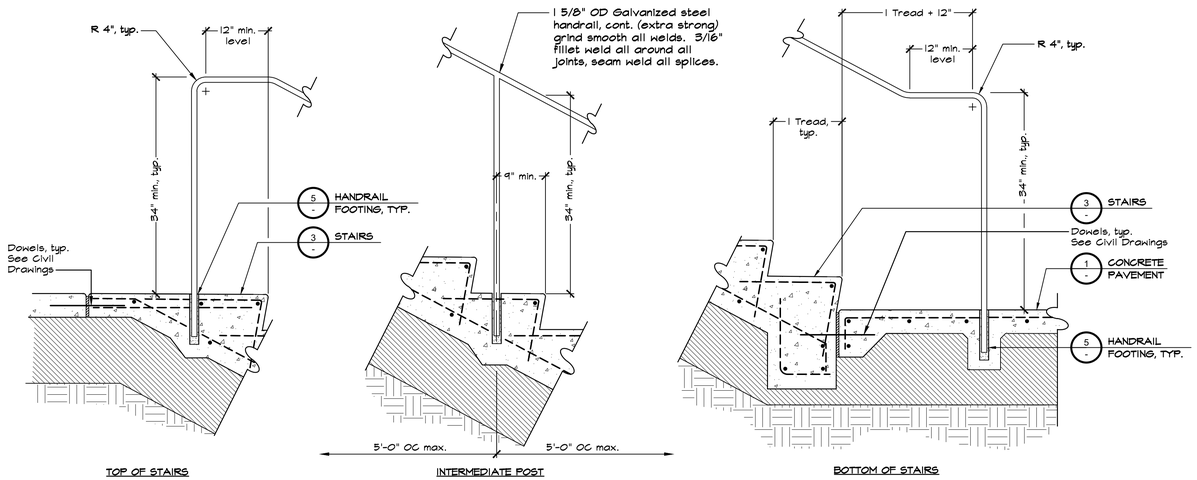

NOTES:

1. Handrails shall be manufactured from steel pipe, and then hot-dipped galvanized. All joints shall be fully welded and sanded smooth before hot-dipping the handrails.
2. Architect shall review and approve handrails in place prior to grouting.
3. See Material and Detail Reference Plan for handrail locations.

4 STAIR HANDRAIL
NOT TO SCALE

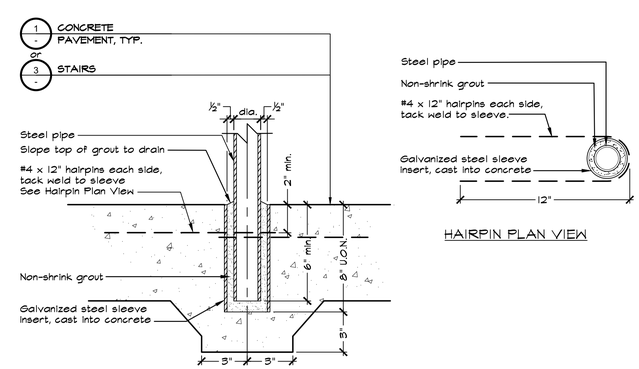

SECTION OF HANDRAIL FOOTING

5 RAILING FOOTING
NOT TO SCALE

QUATTROCCHI KWOK ARCHITECTS
Main:
636 Fifth Street, Santa Rosa, CA 95404
East Bay:
55 Harrison Street, Suite 525,
Oakland, CA 94607
(707) 576-0829

GSM landscape architects, inc.
1700 Soscol Ave. Suite 23
Napa, CA 94559
707-255-4630
www.gsmlainc.com

REGISTERED LANDSCAPE ARCHITECT
STEPHEN STRANZL
No. 2790
Exp. 10-31-22
STATE OF CALIFORNIA

FREEDOM HIGH SCHOOL

NEW AUXILIARY GYMNASIUM

1050 NEROLY RD,
OAKLEY, CA 94561

LIBERTY UNION HIGH SCHOOL DISTRICT

REVISIONS

DSA APP NO. 01-119278

ARCH PROJECT NO:	1869.00
DRAWN BY:	BTI, HDJ
DRAWING SCALE:	1"=20'-0"
PTN: 61721-0068	FILE NO: 7-H4

BID DOCUMENT

APRIL 27, 2021

SHEET TITLE

CONSTRUCTION DETAILS

SHEET NUMBER

L1.1

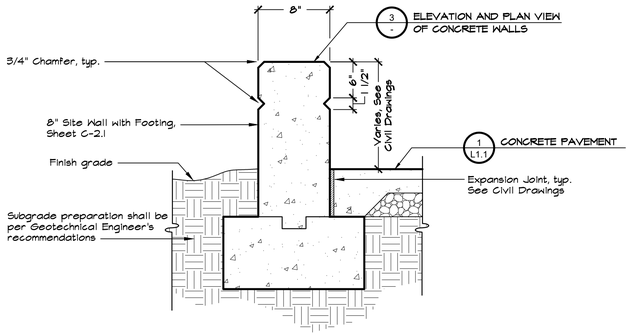

NOTES:

1. See Concrete Notes on the Material and Detail Reference Plan.
2. See Civil Drawings for detailed grading and drainage plans.
3. Hold top of wall level unless otherwise noted on Civil Drawings.
4. Wall finish shall be smooth sack finish on all surfaces and edges.
5. See Civil Drawings for detailed wall, reinforcement and wall drainage design.

1 CONCRETE WALL - TYPE 1
NOT TO SCALE

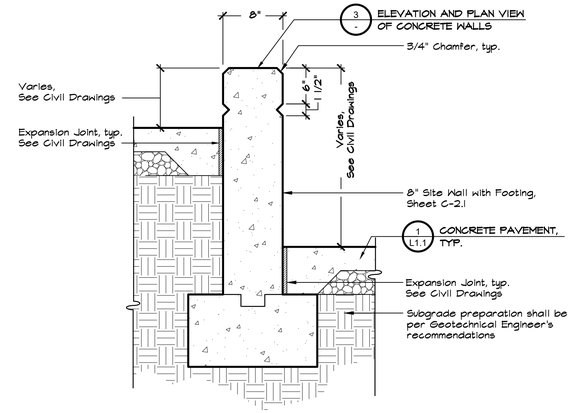

Notes:

1. See Concrete Notes on the Material and Detail Reference Plan.
2. See Civil Drawings for detailed grading and drainage plans.
3. Hold top of wall level unless otherwise noted on the Civil Drawings.
4. Wall finish shall be smooth sack finish on all surfaces and edges.
5. See Civil Drawings for detailed wall, reinforcement and wall drainage design.

2 CONCRETE WALL - TYPE 2
NOT TO SCALE

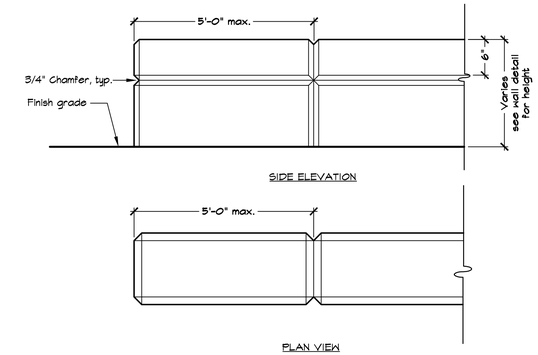

NOTES:

1. See Civil Drawings for reinforcement and expansion joints.

3 ELEVATION AND PLAN VIEW OF CONCRETE WALLS
NOT TO SCALE

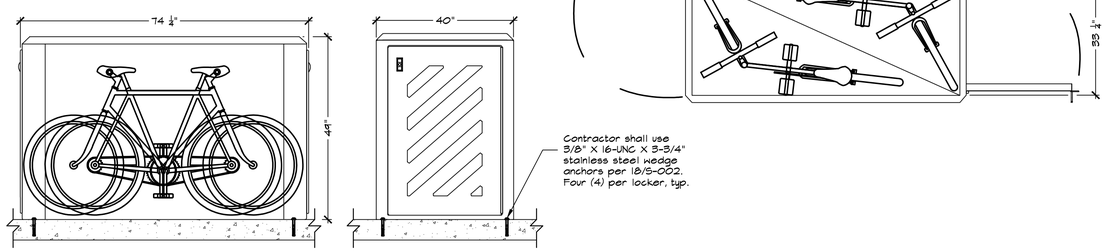

NOTES:

1. Bike Locker shall be Ground Control Systems Fiberglass Bicycle Vault, Bike Locker-FBV2, Leather (Tan) UV stable color, fire retardant composite finish, closed door and padlock handle. Available through Ground Control Systems, (800) 630-7225, info@groundcontrolsystems.com, or approved equal.
2. Installation shall be per manufacturer's specifications.

GROUND CONTROL SYSTEMS

4 BIKE LOCKER
NOT TO SCALE

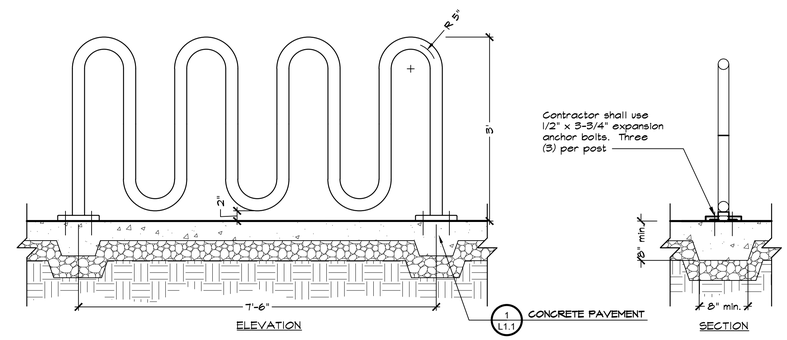

NOTES:

1. Bike Rack shall be DuMor Series 130-40HG, hot-dipped galvanized, 4 peaks. Contact Jon Bawden at Ross Recreation Equipment Co. (530) 342-2860.
2. Installation shall be per manufacturer's specifications.

5 BIKE RACK
NOT TO SCALE

QUATTROCCHI KWOK ARCHITECTS
Main:
636 Fifth Street, Santa Rosa, CA 95404
East Bay:
55 Harrison Street, Suite 525,
Oakland, CA 94607
(707) 576-0829

GSM landscape architects, inc.
1700 Soscol Ave. Suite 23
Napa, CA 94559
707-255-4630
www.gsmlainc.com

REGISTERED LANDSCAPE ARCHITECT
STEPHEN STRANZL
No. 2790
Exp. 10-31-22
STATE OF CALIFORNIA

FREEDOM HIGH SCHOOL

NEW AUXILIARY GYMNASIUM

1050 NEROLY RD,
OAKLEY, CA 94561

LIBERTY UNION HIGH SCHOOL DISTRICT

REVISIONS

DSA APP NO. 01-119278

ARCH PROJECT NO:	1869.00
DRAWN BY:	BTI, HDJ
DRAWING SCALE:	1"=20'-0"
PTN: 61721-0068	FILE NO: 7-H4

BID DOCUMENT

APRIL 27, 2021

SHEET TITLE

CONSTRUCTION DETAILS

SHEET NUMBER

L1.2

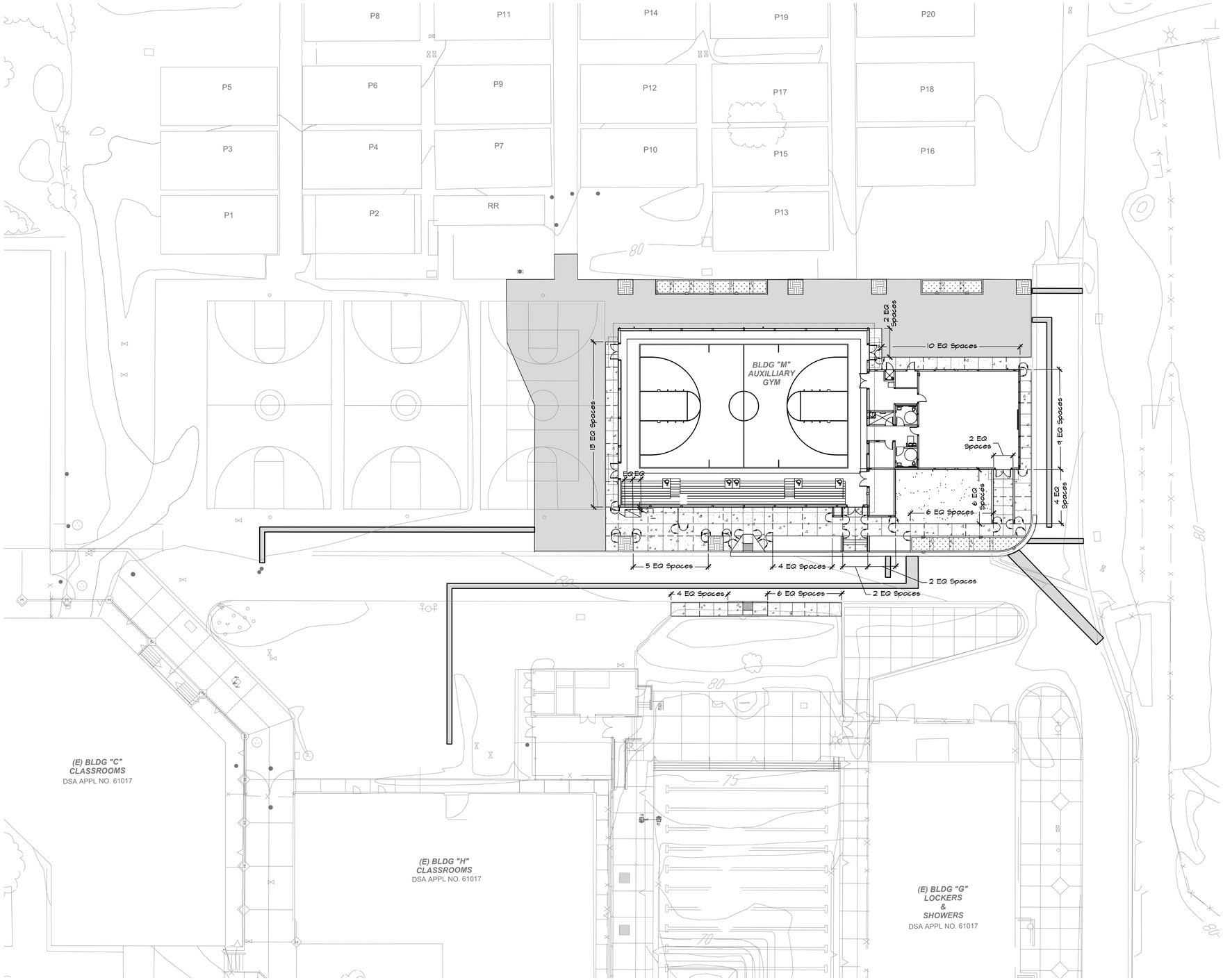

Existing features and topographic information have been taken from a Survey provided by CBG, dated September 17, 2020. GSM landscape architects, Inc. assumes no liability, real or alleged, regarding the accuracy of existing features or topographic information shown.

NORTH

0 20' 40'

SCALE: 1"=20'-0"

LAYOUT LEGEND

- RX'-Y' Radial Dimension
- X' Arc Dimension
- X" Linear Dimension
- Align
- Guideline to show alignment
- Centerline

- Clr Clear Opening
- EQ Equal
- MA Midpoint of Arc
- OC On Center
- PT Point of Tangency
- 90 Degree Angle
- Control Points:

LAYOUT NOTES

1. Contractor shall notify all public or private utility companies two (2) working days prior to commencement of work on this project to verify the locations of existing utility lines. Call Underground Service Alert (U.S.A.) toll free at 1-800-227-2600 or 811, 7:00am to 5:00pm, Monday through Friday.
2. All coordinates and dimensions shown are in a horizontal plane.
3. Written dimensions always take precedence over scaled dimensions. If there is a conflict, notify the District and Landscape Architect and obtain a clarification. No deviation or substitution shall be allowed without obtaining written approval from the District and Landscape Architect.
4. See Civil Drawings for additional layout information.
5. This Plan does not represent a Property Line Survey. Property lines shown hereon may not represent the true position of the line.
6. The Contractor shall coordinate all construction elements including utility locations and required sleeving prior to installation of any underground utilities.
7. The Contractor shall verify critical dimensions, reference and control point locations and construction conditions prior to construction.
8. All dimensions shall be verified in the field, chalked painted, and/or string lined. Any adjustments, major or minor, required to achieve overall design layout shall be reviewed and approved by the District and Landscape Architect prior to construction.
9. All materials shall be furnished and installed by the Contractor per Manufacturer's specifications, unless otherwise noted in these Plans or Specifications.
10. Existing features and topographic information have been taken from a survey performed by Carlson, Barbee and Gibson and provided by Quattrocchi Kwok Architects. GSM landscape architects, Inc. assumes no liability, real or alleged, regarding the accuracy of the existing features or topographic information shown.

QUATTROCCHI KWOK
ARCHITECTS
Main:
636 Fifth Street, Santa Rosa, CA 95404
East Bay:
55 Harrison Street, Suite 525,
Oakland, CA 94607
(707) 576-0829

GSM landscape architects, inc.
1700 Soscol Ave. Suite 23
Napa, CA 94559
707-255-4630
www.gsmlainc.com

REGISTERED LANDSCAPE ARCHITECT
STEPHEN STRANZL
No. 2790
Exp. 10-31-22
STATE OF CALIFORNIA

FREEDOM HIGH SCHOOL

NEW AUXILIARY GYMNASIUM

1050 NEROLY RD,
OAKLEY, CA 94561

LIBERTY UNION
HIGH SCHOOL
DISTRICT

REVISIONS

DSA APP NO. 01-119278

ARCH PROJECT NO:	1869.00
DRAWN BY:	BTI, HDJ
DRAWING SCALE:	1"=20'-0"
PTN: 61721-0068	FILE NO: 7-H4

BID DOCUMENT

APRIL 27, 2021

SHEET TITLE

LAYOUT PLAN

SHEET NUMBER

L2.0

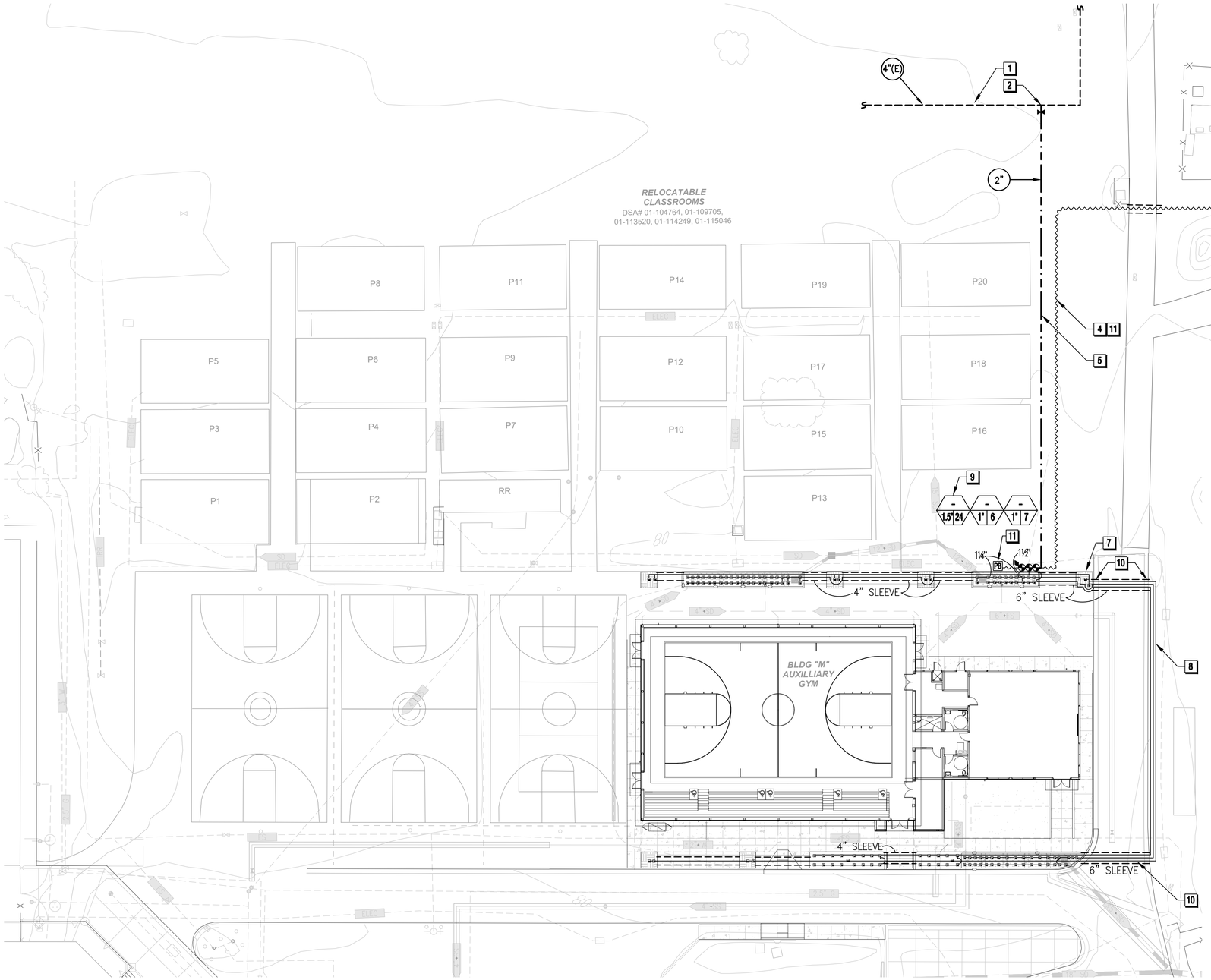

DIGALERT 811

JDE

JAMES D. EDDY ASSOCIATES
LANDSCAPE IRRIGATION ENGINEERS
P.O. BOX 2291
DANVILLE, CALIFORNIA 94526
P:(925) 867-3339
EMAIL: JDE@EDDYASSOCIATES.COM
PLANNING-DESIGN-MANAGEMENT
JDE PROJECT NO: 20037

IRRIGATION DESIGNER:
James D. Eddy
JAMES D. EDDY ASSOCIATES, DANVILLE, CALIFORNIA
NOTE: NO LICENSE FOR THE LANDSCAPE IRRIGATION SYSTEM DESIGN PROFESSION IS AVAILABLE IN THE STATE OF CALIFORNIA.
MEMBER: AMERICAN SOCIETY OF IRRIGATION CONSULTANTS

SHEET NOTES

1. (E) 4" WELL WATER MAIN LINE TO REMAIN IN SERVICE, AS-IS.
2. POINT OF IRRIGATION WATER CONNECTION: CONNECT TO (E) 4" DIA. IRRIGATION PIPING USING WELL WATER FOR IRRIGATION USE ONLY. USE A DOUBLE STRAP SADDLE PER THE PLANS AND SPECIFICATIONS. CONTACT THE DISTRICT FOR FURTHER INSTRUCTIONS IF THE (E) MAIN LINE IS NOT PVC.
3. (E) CONTROLLERS, FOUR TOTAL. LOCATE AVAILABLE UNUSED STATIONS AT ONE CONTROLLER WITH THE DISTRICT. WIRE (N) STATIONS TO THE DESIGNATED CONTROLLER WITH ENOUGH OPEN STATIONS FOR THIS CONTRACT WORK.
4. INSTALL (N) CONTROL WIRE TO (E) CONTROLLER DESIGNATED TO USE BY THE DISTRICT. WIRE STATIONS TO (E) CONTROLLER WHERE OPEN STATIONS ARE LOCATED.
5. INSTALL (N) MAIN LINE AND ROUTE AS SHOWN.
6. (E) WELL AND PUMP
7. INSTALL PIPES ALONG EDGE OF TREE PLANTER AND AWAY FROM TREE ROOTZONE, TYPICAL.
8. TRENCH FOR (N) PIPING IN (E) PLANTED AREA. REPLACE (E) PLANTING IN KIND.
9. ASSIGN CONTROLLER AND STATION NUMBER TO RCV BASED UPON (E) CONTROLLER USED AND AVAILABLE OPEN STATION NUMBERS.
10. SAWCUT (E) PAVEMENT, CURBS, AND GUTTER. PATCH PAVEMENT, CURB, AND GUTTER WITH PAVEMENT, CURB, AND GUTTER PER DETAILS ON CIVIL DRAWINGS.
11. PROVIDE AND INSTALL EIGHT (8) SPARE CONTROL WIRES AND ONE (1) COMMON WIRE FROM (N) PULL BOX AT CONTROLLER TO (N) PULL BOX AT VALVE GROUP FOR FUTURE USE.

CONSTRUCTION NOTES

1. (E) IRRIGATION INSIDE THE (N) WORK AREA SHALL BE DEMOLISHED AS REQUIRED TO MAKE WAY FOR THE (N) HARDSCAPE/LANDSCAPE CONSTRUCTION. THIS INCLUDES (E) LATERAL LINE PIPE. WHEN IN DOUBT, CONFER WITH ARCHITECT FOR DIRECTION.
2. THE (E) WELL WATER IRRIGATION MAIN LINE SERVING FREEDOM HIGH SCHOOL CAMPUS LANDSCAPE AND FIELDS SHALL REMAIN IN SERVICE AND IN GOOD WORKING ORDER AT ALL TIMES. THE CONTRACTOR SHALL PROVIDE THE FOLLOWING RESEARCH AND SERVICES PRIOR TO ACTUAL CONSTRUCTION OF THE NEW WORK:
   A. DISCUSS THE ACTUAL IRRIGATION MAIN LINE PIPE LOCATIONS WITH THE ARCHITECT. STAKE LOCATIONS AS REQUIRED.
   B. POT HOLE TO ESTABLISH WHAT BURIED PIPES ARE IRRIGATION MAIN LINES SERVING THE FIELDS (WELL WATER).
3. WIRING NOTE FOR (E) RCV WIRING FOUND IN THIS CONTRACT AREA: (E) RCV'S CONTROLLED FROM AND WIRED TO (E) ON-SITE CONTROLLERS MAY BE FOUND DURING EXCAVAVTION. SALVAGE AND PROTECT (E) CONVENTIONAL CONTROL WIRING FOUND NEXT TO THE (E) PVC MAIN LINE. REROUTE WITH (N) WIRE WHERE NECESSARY TO KEEP THE (E) IRRIGATION SYSTEM IN OPERATION. (E) SPLICED WIRES SHALL BE CONTAINED WITHIN AN APPROVED BURIED SPLICE BOX WITH LID SURFACE AT GRADE.

Existing features and topographic information have been taken from a Survey provided by CBG, dated September 17, 2020. GSM landscape architects, inc. assumes no liability, real or alleged, regarding the accuracy of existing features or topographic information shown.

NORTH

0 20' 40'

SCALE: 1"=20'-0"

QUATTROCCHI KWOK ARCHITECTS
Main:
636 Fifth Street, Santa Rosa, CA 95404
East Bay:
55 Harrison Street, Suite 525,
Oakland, CA 94607
(707) 576-0829

GSM landscape architects, inc.
1700 Soscol Ave. Suite 23
Napa, CA 94559
707-255-4630
www.gsmlainc.com

REGISTERED LANDSCAPE ARCHITECT
GREGORY STRANZL
No. 2790
Exp. 10-31-22
STATE OF CALIFORNIA

FREEDOM HIGH SCHOOL

NEW AUXILIARY GYMNASIUM

1050 NEROLY RD,
OAKLEY, CA 94561

LIBERTY UNION HIGH SCHOOL DISTRICT

REVISIONS

DSA APP NO. 01-119278

ARCH PROJECT NO:	1869.00
DRAWN BY:	SUT,JDE
DRAWING SCALE:	1"=20'-0"
PTN: 61721-0068	FILE NO: 7-H4

BID DOCUMENT

APRIL 27, 2021

SHEET TITLE

IRRIGATION PLAN

SHEET NUMBER

L3.0

IRRIGATION INSTALLATION NOTES

REFER TO IRRIGATION SPECIFICATIONS FOR DETAILED INFORMATION.
LUHSD = LIBERTY UNION HIGH SCHOOL DISTRICT

1. PROVIDE INSTALLATION BY PERSONS FAMILIAR WITH IRRIGATION WORK AND UNDER THE SUPERVISION OF A QUALIFIED SUPERVISOR.
2. OBTAIN THE PERMITS REQUIRED AND PROVIDE LABOR AND MATERIALS NECESSARY TO FULLY COMPLETE THE WORK IN ACCORDANCE WITH THE DRAWINGS AND THE SPECIFICATIONS.
3. LOCATE AND PROTECT NEW AND EXISTING UTILITIES PRIOR TO EXCAVATION. DO NOT DAMAGE EXISTING UTILITIES, PAVING OR STRUCTURES. PROVIDE THE NECESSARY REPAIRS AT NO ADDITIONAL COST TO LUHSD.
4. REMOVE DEBRIS AND ACCUMULATION OF DEBRIS AS A RESULT OF IRRIGATION CONSTRUCTION FROM THE SITE AND LEAVE AREA IN A CLEAN CONDITION ACCEPTABLE TO LUHSD. MAINTAIN SITE FOR THE SPECIFIED CALENDAR DAYS FOLLOWING ACCEPTANCE OF THE WORK BY LUHSD AND MAKE CORRECTIONS OR REPAIRS TO THE IRRIGATION AS DIRECTED BY LUHSD AT THE COMPLETION OF THE MAINTENANCE PERIOD.
5. THE DRAWINGS ARE DIAGRAMMATIC. PIPE AND EQUIPMENT MAY BE SHOWN IN PAVING FOR CLARITY ONLY – INSTALL IN PLANTING AREAS WHERE POSSIBLE. DUE TO THE SCALE OF THE DRAWINGS, ALL OFFSETS, FITTINGS, SLEEVES, ETC. WHICH MAY BE REQUIRED ARE NOT INDICATED. INVESTIGATE THE STRUCTURAL AND FINISHED CONDITIONS AFFECTING THE CONTRACT WORK INCLUDING OBSTRUCTIONS GRADE DIFFERENCES OR AREA DIFFERENCES WHICH MAY HAVE NOT BEEN CONSIDERED IN THE ENGINEERING. WHERE FIELD CHANGES EXIST, COORDINATE THE INSTALLATION WORK ACCORDINGLY BY NOTIFICATION AND APPROVAL OF LUHSD AS PER THE CONTRACT SPECIFICATIONS. COORDINATE IRRIGATION CONTRACT WORK WITH ALL APPLICABLE CONTRACTORS FOR THE LOCATION AND INSTALLATION OF PIPE, CONDUIT, OR SLEEVES OF PIPE, CONDUIT OR SLEEVES THROUGH OR UNDER WALLS, ROADWAYS, PAVING, STRUCTURE, ETC. BEFORE CONSTRUCTION. ASSUME FULL RESPONSIBILITY FOR REQUIRED REVISIONS IF THESE NOTIFICATIONS ARE NOT PERFORMED.
6. CONTRACTOR SHALL COORDINATE WITH OTHER CONTRACTORS ALL IRRIGATION SLEEVES, CONDUIT, AND PIPING INSTALLED UNDER PAVEMENT PRIOR TO INSTALLATION.
7. THE INTENT OF THIS IRRIGATION SYSTEM DESIGN IS TO PROVIDE THE MINIMUM AMOUNT OF WATER REQUIRED TO SUSTAIN GOOD PLANT HEALTH.
8. PROGRAM THE CONTROLLER TO PROVIDE THE MINIMUM AMOUNT OF WATER NEEDED TO SUSTAIN GOOD PLANT HEALTH. MAKE ADJUSTMENTS TO THE PROGRAM FOR SEASONAL WEATHER CHANGES, PLANT MATERIAL, WATER REQUIREMENTS, MOUNDS AND SLOPES, SUN, SHADE AND WIND EXPOSURES.
9. THE IRRIGATION SYSTEM FOR THIS CONTRACT WORK AREA IS DESIGNED FOR 1 VALVE TO OPERATE AT ONE TIME. THIS WILL ALLOW THE SYSTEM TO IRRIGATE IN APPROXIMATELY 8 HOURS OR LESS ACCORDING TO WEATHER CONDITIONS. TOTAL GPM DEMAND OF SYSTEM WILL BE APPROXIMATELY 23 GPM MAXIMUM. DO NOT UNDER ANY CIRCUMSTANCE EXCEED 23 GPM OR OPERATE MORE THAN ONE (1) VALVE AND ONE QUICK COUPLING VALVE AT THE SAME TIME.
11. IRRIGATION CONTROL WIRE: RAINMASTER 2-WIRE CABLE, TW-CAB-14, WITH U.L. APPROVAL FOR DIRECT BURIAL IN GROUND, SIZE AWG-UF #14-1.
12. SPLICES: MADE WITH 3M-DBY, OR SPEARS MODEL #400, OR APPROVED EQUAL SEAL PACKS.
13. INSTALL ONE SPARE 2-WIRE CABLE FROM CONTROLLER ALONG THE ENTIRE MAIN LINE. INSTALL 36" EXCESS WIRE INTO A QUICK COUPLER BOX AT EACH VALVE GROUP. WEATHERPROOF UNUSED WIRE ENDS. SPLICING OF 2-WIRE CABLE AND 24 VOLT WIRES IS NOT PERMITTED EXCEPT IN VALVE BOXES. LEAVE A 36" LONG, 1" DIAMETER COIL OF EXCESS WIRE AT EACH SOLENOID WIRE SPLICE.
14. PLASTIC VALVE BOXES AND LIDS SHALL BE PURPLE IN COLOR WITH BOLT DOWN, NON-HINGED COVER MARKED "IRRIGATION". BOX BODY SHALL HAVE KNOCK OUTS. MANUFACTURER: RAIN BIRD, NDS, CARSON/BROOKS, OR APPROVED EQUAL.
15. INSTALL REMOTE CONTROL VALVE BOXES 12" FROM WALK, CURB, BUILDING OR LANDSCAPE FEATURE. AT MULTIPLE VALVE BOX GROUPS, EACH BOX SHALL BE AN EQUAL DISTANCE FROM THE WALK, CURB, ETC. AND EACH BOX SHALL BE 12" APART. SHORT SIDE OF RECTANGULAR VALVE BOXES SHALL BE PARALLEL TO WALK, CURB, ETC. REFER TO BOX INSTALLATION DETAIL.
16. FLUSH AND ADJUST IRRIGATION HEADS FOR EFFICIENT PERFORMANCE. PREVENT OVERSPRAY ON THE WALKS, PLAYGROUNDS, ROADWAYS, SIGNS, LIGHTS, AND/OR BUILDINGS. SELECT THE BEST DEGREE OF ARC TO FIT THE EXISTING SITE CONDITIONS AND THROTTLE THE FLOW CONTROL OR PRESSURE REGULATION DEVICE AT EACH VALVE TO OBTAIN THE BEST OPERATING PRESSURE FOR EACH SYSTEM.
17. SET POP-UP HEADS PERPENDICULAR TO FINISH GRADE OF THE AREA TO BE IRRIGATED UNLESS OTHERWISE NOTED ON THE DRAWINGS.
18. IRRIGATION HEAD LAYOUT AND PIPING AS SHOWN ON THE DRAWINGS IS INDICATIVE OF THE WORK TO BE INSTALLED. IRRIGATION HEADS, ARC OF SPRAY, RADIUS OF SPRAY AND PIPING AT CERTAIN LOCATIONS MAY REQUIRE FIELD ADJUSTMENT TO PREVENT HARM TO TREE ROOTS AND INTERFERENCE OF TREES TO IRRIGATION SPRAY.
19. EXERCISE PARTICULAR ATTENTION AT ALL EXISTING AND NEW TREES TO ELIMINATE DIRECT SPRAY OF IRRIGATION HEADS ON TREE TRUNKS.
20. THE SPRINKLER SYSTEM DESIGN IS BASED ON THE MINIMUM OPERATING PRESSURE SHOWN ON THE IRRIGATION DRAWINGS. VERIFY WATER PRESSURE PRIOR TO CONSTRUCTION. REPORT ANY DIFFERENCE BETWEEN THE WATER PRESSURE INDICATED ON THE DRAWINGS AND THE ACTUAL PRESSURE READING AT THE IRRIGATION POINT OF CONNECTION TO LUHSD.
21. IRRIGATION DEMAND: 23 GPM MAX. (THIS WORK ONLY) AT 80 PSI WELL WATER PRESSURE.
22. PIPE SIZING SHOWN ON THE DRAWINGS IS TYPICAL. AS CHANGES IN LAYOUT OCCUR DURING STAKING AND CONSTRUCTION ADJUST THE SIZE ACCORDINGLY.
23. PIPE THREAD SEALANT COMPOUND SHALL BE PERMATEX 51 OR RECTORSEAL T+2.
24. BEFORE COMMENCING WITH WORK UNDER THIS CONTRACT, NOTIFY UNDERGROUND SERVICE ALERT AT 811 OR 1-800-227-2600 AND LUHSD. DETERMINE THE EXACT LOCATION OF EXISTING UTILITIES, PIPES, AND STRUCTURES BEFORE COMMENCING WORK. COSTS OF DAMAGES WHICH OCCUR FROM FAILURE TO ACCURATELY LOCATE AND PRESERVE THESE UTILITIES SHALL BE THE RESPONSIBILITY OF THE IRRIGATION CONTRACTOR.
25. CAUTION: USE SHOVELS AND HAND DIG TRENCHES AROUND (E) TREE ROOT SYSTEMS. INSTALL PIPING AWAY FROM (E) TREE ROOT SYSTEMS. PROTECT (E) TREE ROOT SYSTEMS AT ALL TIMES. TYPICAL FOR ALL (E) TREE ROOT SYSTEMS. INSTALL ALL BURIED IRRIGATION SUCH AS PVC PIPING, VALVES, HEADS, BOXES, CONDUIT WITH WIRES, IN A MANNER TO AVOID EXCAVATING OR TRENCHING WITHIN THE EXISTING TREE DRIPLINES AND ROOTZONES.
26. NOTE: NO PLASTIC PIPE OR SOLVENT WELDED JOINTS ARE PERMITTED ABOVE GRADE.
27. CONTROLLER, MASTER VALVE, AND FLOW SENSOR NOTE: CONTRACTOR SHALL BE RESPONSIBLE FOR ORDERING, COORDINATION WITH DISTRIBUTOR AND CONTROLLER ASSEMBLY VENDOR, THE INSTALLATION OF MASTER VALVE, FLOW SENSOR, AND ALL ASSOCIATED PARTS AND HARDWARE TO PROVIDE A COMPLETE AND FULLY OPERABLE SYSTEM.
28. CONTRACTOR SHALL COORDINATE WORK AFFECTING EXISTING, TEMPORARY AND PROPOSED IMPROVEMENTS TO PROVIDE CONTINUOUS IRRIGATION SYSTEM OPERATION.
29. CATHODIC PROTECTION REQUIRED – SEE CATHODIC PROTECTION PLANS AND SPECIFICATIONS.
30. SUBSURFACE EMITTER IRRIGATION:
    - CONTACT THE LOCAL SUBSURFACE MANUFACTURER'S REPRESENTATIVE FOR THE INSTALLATION PROCEDURES AND FOR ASSISTANCE WITH THE INSTALLATION OF THE SUBSURFACE EMITTER LINE.
    - INSTALL EMITTER DRIPPERLINE ACCORDING TO THE MANUFACTURER'S INSTRUCTIONS AND GUIDELINES AND THE DETAILS SHOWN ON THE PLANS.
    - PRIOR TO PLANTING, THOROUGHLY FLUSH ALL EMITTER TUBING TO REMOVE CONSTRUCTION DEBRIS AND SOIL FROM THE TUBING.
    - PRIOR TO PLANT INSTALLATION MAKE SURE THE SURROUNDING SHRUB PLANTING SOIL AND SOIL BASE FOR PLANTS IS THOROUGHLY MOISTENED.
    - TEMPORARY SURFACE WATERING IS REQUIRED AFTER INITIAL PLANTING OF THE PLANTS, SEED, OR SOD. ALLOW TWO WEEKS OR MORE AS NEEDED TO PROMOTE ROOT GROWTH AND SUSTAIN GOOD PLANT HEALTH.
    - CONTAINER ROOTBALL SOIL WILL HOLD WATER DIFFERENTLY FROM THE SITE'S NATIVE SOIL. DO NOT ALLOW SHRUB CONTAINER ROOTBALLS TO DRY OUT. KEEP CONTAINER ROOTBALLS MOIST AT ALL TIMES.
    - OBSERVE PLANTS TO MAKE SURE THAT THE PLANTS ARE ROOTING IN THE PREPARED SURROUNDING SOIL BASE AND HAVE ENOUGH MOISTURE.

IRRIGATION LEGEND

SYMBOL	NUMBER	MANUFACTURER/DESCRIPTION	PSI	FLOW (GPM OR GPH)	RADIUS (MIN./MAX.)	PRECIP. RATE
TREE ROOT WATERING SYSTEM WITH SOCK						
	[RWS-B-C-1401]+[RWS-SOCK]	RAIN BIRD INSTALL 1 BUBBLER PER TREE, STAND-ALONE TREE AND TREE WITHIN SHRUB BUBBLER AREA	30	0.25	FLOOD	0.5 GPM
BUBBLERS						
	1401	RAIN BIRD BUBBLER, ONE PER SHRUB, ONE PER STAND-ALONE TREE ONLY, INSTALL AT FINISHED GRADE PER DETAIL.	30	0.25	FLOOD	0.25 GPM
VALVES						
	[100DWS.IB-R(1")]+[TW-D-1] [150DWS.IB-R(1.5")]+[TW-D-1]	GRISWOLD REMOTE CONTROL VALVE, NORMALLY CLOSED, BRASS CONSTRUCTION, FIPT, WITH INTEGRAL UNION, BALL VALVE, AND RAINMASTER ONE STATION DECODER. (MINIMUM FLOW: 0.1 GPM)				
	44NP (1")	RAIN BIRD QUICK COUPLING VALVE WITH PURPLE LOCKING RUBBER COVER				
	LGT22SS304X (2")	LEEMCO 304SS GATE VALVE WITH FIPT CONNECTIONS AND CROSS TOP. SIZE GATE VALVE EQUAL TO MAIN LINE PIPE SIZE.				
CONTROLLER						
E	NIC	EXISITNG CONTROLLER ASSEMBLY WITH OPEN STATIONS FOR THIS CONTRACT'S USE.				

CONTROLLER STATION NUMBER
APPROXIMATE FLOW (GPM)
REMOTE CONTROL VALVE SIZE

SLEEVES AND PIPE

MAIN LINE: (E) IRR MAIN LINE USING WELL WATER FOR IRRIGATION.

2-INCH MAIN LINE: 1120-CLASS 315 PVC PURPLE PLASTIC PIPE WITH SOLVENT WELDED CONNECTIONS. PROVIDE SCHEDULE 80 PVC PLASTIC SOLVENT WELDED FITTINGS. SOIL COVER: 18-INCH IN SOIL, 18-INCH UNDER PEDESTRIAN PAVEMENT, 24-INCH UNDER VEHICULAR PAVEMENT. SIZE AS NOTED. PROVIDE T. CHRISTY ENTERPRISES NON-POTABLE WATER DETECTABLE MARKING TAPE, TA-DT-6-BNP, PER THE SPECIFICATION, ABOVE PIPE.

LATERAL LINE: 1120-SCHEDULE 40 PVC PURPLE PLASTIC PIPE WITH SCHEDULE 40 PVC PLASTIC SOLVENT WELDED FITTINGS. 12-INCH SOIL COVER. SIZE 1-INCH UNLESS OTHERWISE NOTED.

SLEEVE: 1120-CLASS 200 OR 1120-SCHEDULE 40 PVC PLASTIC PIPE, WHICHEVER HAS THE LARGEST WALL THICKNESS, WITH SCHEDULE 40 PVC PLASTIC SOLVENT WELDED FITTINGS. SOIL COVER TO BE EQUAL TO COVER REQUIRED FOR PIPE CONTAINED WITHIN SLEEVE 18-INCH MINIMUM COVER. SIZE AS NOTED.

LOW VOLTAGE CONVENTIONAL CONTROL AND COMMON WIRE ROUTE

PB — ELECTRICAL PULL BOX: RECTANGULAR 14x19 PLASTIC BOX WITH PLASTIC BOLT-DOWN LID.

JDE
JAMES D. EDDY ASSOCIATES
LANDSCAPE IRRIGATION ENGINEERS
P.O. BOX 2291
DANVILLE, CALIFORNIA 94526
P:(925) 867-3339
EMAIL: JDE@EDDYASSOCIATES.COM
PLANNING-DESIGN-MANAGEMENT
JDE PROJECT NO: 20037

IRRIGATION DESIGNER:
James D. Eddy
JAMES D. EDDY ASSOCIATES, DANVILLE, CALIFORNIA
NOTE: NO LICENSE FOR THE LANDSCAPE IRRIGATION SYSTEM DESIGN PROFESSION IS AVAILABLE IN THE STATE OF CALIFORNIA.
MEMBER: AMERICAN SOCIETY OF IRRIGATION CONSULTANTS

ABBREVIATIONS:

AV	AIR VALVE
CI	CAST IRON
CU	COPPER
DEG	DEGREES
DI	DUCTILE IRON
DIA	DIAMETER
ECV	EMITTER CONTROL VALVE
EFF	EFFICIENCY
ETWU	ESTIMATED TOTAL WATER USE
ETO(ET)	EVAPOTRANSPIRATION
(E)	EXISTING
(F)	FUTURE
FC	FULL CIRCLE (360°)
FT	FEET
FIPT	FEMALE IRON PIPE THREAD
FPS	FEET PER SECOND
FS	FLOW SENSOR
FV	FLUSH VALVE
GA	GAUGE
GI	GALVANIZED IRON
GV	GATE VALVE
GPH	GALLONS PER HOUR
GPM	GALLONS PER MINUTE
ID	INTERNAL DIAMETER
IN	INCHES
IRR	IRRIGATION
LA	LANDSCAPE ARCHITECT
MAWA	MAXIMUM APPLIED WATER ALLOWANCE
MAX	MAXIMUM
MCV	MASTER CONTROL VALVE
MV	MASTER VALVE
MIN	MINIMUM
MIPT	MALE IRON PIPE THREAD
MPR	MATCHED PRECIPITATION RATE
MWELO	MODEL WATER EFFICIENT LANDSCAPE ORDINANCE
(N)	NEW
NIC	NOT IN CONTRACT
NPW	NON POTABLE WATER
NTS	NOT TO SCALE
OD	OUTSIDE DIAMETER
PC	PART CIRCLE (20°-360°)
PE	POLYETHYLENE
POC	POINT OF CONNECTION
PRECIP	PRECIPITATION
PRV	PRESSURE REDUCING VALVE
PVBA	PRESSURE VACUUM BREAKER ASSEMBLY
PSI	POUNDS PER SQUARE INCH
PVC	POLYVINYLCHLORIDE
PW	POTABLE WATER
QTY	QUANTITY
QCV	QUICK COUPLING VALVE
RCV	REMOTE CONTROL VALVE
RPBA	REDUCED PRESSURE BACKFLOW ASSEMBLY
RS	RIGID STEEL
RW	RECYCLED WATER
SCH	SCHEDULE
SF	SQUARE FOOT OR FEET
SQ	SQUARE
SS	STAINLESS STEEL
STD	STANDARD
TBD	TO BE DETERMINED
TBE	THREADED BOTH ENDS
TOE	THREADED ONE END
TYP	TYPICAL
UON	UNLESS OTHERWISE NOTED
UPC	UNIFORM PLUMBING CODE
USA	UNDERGROUND SERVICE ALERT
UV	ULTRAVIOLET
UVR	ULTRAVIOLET RESISTANT
VAC	VOLTS-ALTERNATING CURRENT
VB	VALVE BOX
WM	WATER METER

QUATTROCCHI KWOK ARCHITECTS
Main:
636 Fifth Street, Santa Rosa, CA 95404
East Bay:
55 Harrison Street, Suite 525,
Oakland, CA 94607
(707) 576-0829

GSM landscape architects, inc.
1700 Soscol Ave. Suite 23
Napa, CA 94559
707-255-4630
www.gsmlainc.com

REGISTERED LANDSCAPE ARCHITECT
STEVEN STRANZL
No. 2790
Exp. 10-31-22
STATE OF CALIFORNIA

FREEDOM HIGH SCHOOL

NEW AUXILIARY GYMNASIUM

1050 NEROLY RD,
OAKLEY, CA 94561

LIBERTY UNION HIGH SCHOOL DISTRICT

REVISIONS

DSA APP NO. 01-119278

ARCH PROJECT NO:	1869.00
DRAWN BY:	SUT,JDE
DRAWING SCALE:	1"=20'-0"
PTN: 61721-0068	FILE NO: 7-H4

BID DOCUMENT

APRIL 27, 2021

SHEET TITLE

IRRIGATION LEGEND & NOTES

SHEET NUMBER

L3.1

NON–POTABLE WATER ITEMS:
R1. VALVE BOX AND LID COLOR: RECYCLED WATER PURPLE
R2. RED WELL WATER TAG – ATTACH TO VALVE WITH PLASTIC ZIP TIE.

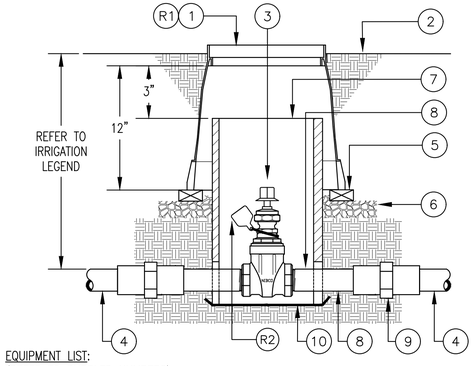

EQUIPMENT LIST:
(REFER TO BUBBLED NUMBERS)
1. 10" ROUND PLASTIC VALVE BOX WITH PLASTIC BOLT–DOWN LID.
2. FINISH GRADE
3. GATE VALVE WITH SQ. NUT
4. PVC MAIN LINE, SIZE AND TYPE PER SPECIFICATIONS
5. COMMON BRICK, 2 TOTAL, 180 DEGREES APART.
6. CRUSHED GRAVEL BASE, 6" DEEP, ALL AROUND
7. 8" DIAMETER PVC VERTICAL SLEEVE FOR ACCESS – NOTCH SLEEVE TO FIT OVER PIPE
8. NIPPLE, PVC SCH 80, TOE, 2 TOTAL, SIZED EQUAL TO GATE VALVE
9. FEMALE ADAPTER, PVC SCH 80, S X S, 2 TOTAL, SIZED EQUAL TO GATE VALVE
10. METAL WIRE MESH TO PREVENT GOPHER INTRUSION, 1/2" MESH, 19 GA, GALVANIZED

INSTALLATION NOTES:
1. INSTALL VALVE BOX FLUSH WITH FINISH GRADE IN TURF AND 1" ABOVE FINISH GRADE IN SHRUB AREAS.
2. KEEP BRICKS AWAY FROM PIPE.

1 GATE VALVE, THREADED (1.5")
NOT TO SCALE

DO NOT COPY WITHOUT WRITTEN PERMISSION OF JDE © 1999

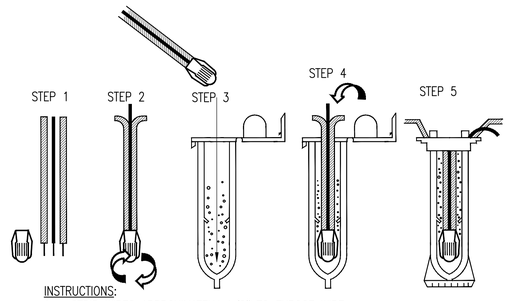

INSTRUCTIONS:
1. STRIP WIRES APPROXIMATELY 1/2" TO EXPOSE WIRE.
2. TWIST CONNECTOR AROUND WIRES CLOCKWISE UNTIL HAND TIGHT, DO NOT OVERTIGHTEN.
3. INSERT WIRE ASSEMBLY INTO PLASTIC TUBE UNTIL WIRE CONNECTOR SNAPS PAST LIP IN BOTTOM OF TUBE.
4. PLACE WIRES WHICH EXIT TUBE IN WIRE EXIT HOLES AND CLOSE CAP UNTIL IT SNAPS.
5. INSPECT FINAL SPLICE ASSEMBLY TO BE SECURE AND FINISHED.

2 WIRE SPLICE
NOT TO SCALE

DO NOT COPY WITHOUT WRITTEN PERMISSION OF JDE © 1999

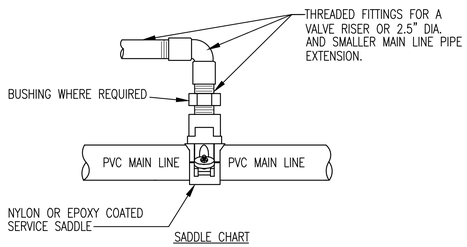

SADDLE CHART

NOMINAL PIPE DIA. (INCHES)	MAIN LINE AVERAGE O.D. (INCHES)	SADDLE MANUFACTURER
4	4.50	LEEMCO LTS SERIES; ROMAC 202N; SMITH–BLAIR 317; TAP SIZE AS REQUIRED TO MATCH TAP SIZE OF VALVE OR PIPE.
6	6.63	
8	8.63	

RECOMMENDED NUT TORQUE		
NUT SIZE	PVC PIPE	CI, DI, OR OTHER PIPE
1/2"	20 FT–LBS.	40–50 FT–LBS.
5/8"	30–40 FT–LBS.	60–70 FT–LBS.
3/4"		80–90 FT–LBS.

NOTES:
1. TIGHTEN NUTS EVENLY UNTIL SADDLE BODY CONFORMS SNUGLY TO PIPE. LOOSEN NUTS AND TORQUE AS INDICATED ABOVE OR BY MANUFACTURER.
2. FOR VALVE CONNECTION, USE TAP SIZE EQUAL TO THE VALVE.
3. FOR QUICK COUPLING VALVE CONNECTION, USE 1" FIPT TAP SIZE.
4. FOR AIR/VACUUM RELIEF VALVE CONNECTION, USE 1" FIPT TAP SIZE.
5. FOR 2.5" OR SMALLER MAIN LINE EXTENSION, USE TAP SIZE EQUAL TO MAIN LINE SIZE.
6. PROTECT THREADS FROM DISTORTING, SCREW THE CORPORATION STOP OR OTHER FITTING INTO THE SADDLE BODY PRIOR TO FINAL TIGHTENING.

3 SADDLE CONNECTION - 4" DIA. MAIN LINE POC
NOT TO SCALE

DO NOT COPY WITHOUT WRITTEN PERMISSION OF JDE © 1999

NON–POTABLE WATER ITEMS:
R1. VALVE BOX AND LID COLOR: RECYCLED WATER PURPLE
R2. RED WELL WATER TAG – ATTACH TO VALVE WITH A PLASTIC ZIP TIE.

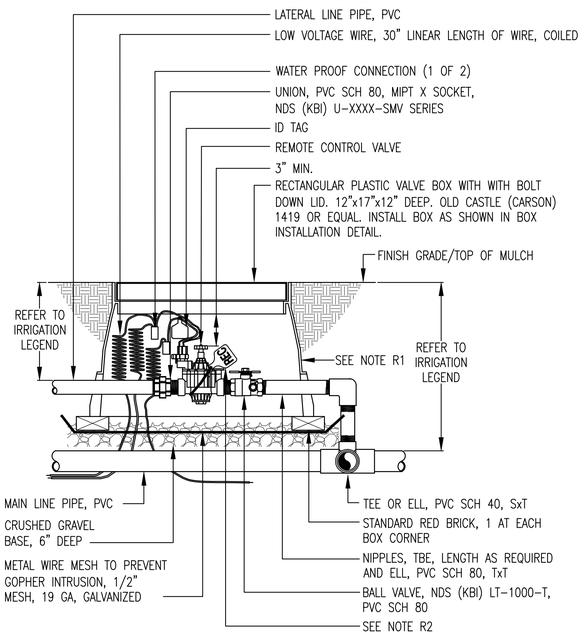

4 REMOTE CONTROL VALVE (SPRAY AND BUBBLER ZONES)
NOT TO SCALE

DO NOT COPY WITHOUT WRITTEN PERMISSION OF JDE © 1999

NON–POTABLE WATER ITEMS:
1. VALVE BOX AND LID COLOR: RECYCLED WATER PURPLE

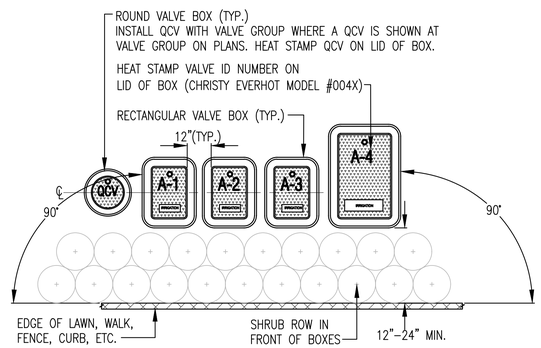

INSTALLATION NOTES:
1. INSTALL VALVE BOXES AS SHOWN IN THE DETAIL ABOVE.
2. INSTALL VALVE BOX ASSEMBLIES IN SHRUB OR GROUND COVER ZONES. VALVE ASSEMBLIES INSTALLED IN A TURF ZONE IS PERMITTED ONLY IF A SHRUB OR GROUND COVER AREA DOES NOT EXIST IN THE PROXIMITY OF THE IRRIGATION ZONE.
3. PLACE THE CENTER OF THE VALVE BOX OVER THE CENTER OF THE REMOTE CONTROL VALVE. INSTALL VALVE BOX IN A WAY TO ENABLE EASY SERVICING OR REMOVAL OF VALVE.
4. INSTALL TOP OF BOX 1" ABOVE FINISHED GRADE IN SHRUB OR GROUND COVER AREAS OR EQUAL TO THE DEPTH OF THE MULCH AND FLUSH WITH GRADE IN TURF ZONES. INSTALL THE TOP OF BOX AT THE SAME ANGLE AS THE FINISHED GRADE.
5. PREVENT THE COLLAPSE AND DEFORMATION OF VALVE BOX SIDES. DO NOT HEAVILY COMPACT SOIL AGAINST THE SIDES OF THE VALVE BOX.
6. INSTALL EXTENSION RISERS TO VALVE BOX AS REQUIRED TO COMPLETELY ENCLOSE VALVE ASSEMBLY. PROVIDE EXTENSION RISER MANUFACTURED BY THE SAME MANUFACTURER OF THE VALVE BOX.
7. PREVENT SOIL INTRUSION INTO THE BOX. USE 20 MIL POLYETHYLENE TAPE AROUND PIPE CUTOUTS AS NEEDED.
8. SAWCUTTING OR MODIFYING THE VALVE BOXES BEYOND WHAT THE MANUFACTURER ALLOWS IS NOT PERMITTED.
11. WHEN ASSEMBLY IS COMPLETE INSTALL THE GRAVEL BELOW THE VALVE. FINISHED GRAVEL SHALL BE CLEAN WITHOUT DEBRIS IN THE VALVE BOX.
12. WHEN WORK IS COMPLETE AND ACCEPTED BY THE DISTRICT OR TO PREVENT VANDALISM, BOLT DOWN THE LIDS.

5 BOX INSTALLATION
NOT TO SCALE

DO NOT COPY WITHOUT WRITTEN PERMISSION OF JDE © 1999

JDE
JAMES D. EDDY ASSOCIATES
LANDSCAPE IRRIGATION ENGINEERS
P.O. BOX 2291
DANVILLE, CALIFORNIA 94526
P:(925) 867-3339
EMAIL: JDE@EDDYASSOCIATES.COM
PLANNING-DESIGN-MANAGEMENT
JDE PROJECT NO: 20037

IRRIGATION DESIGNER:
James D. Eddy
JAMES D. EDDY ASSOCIATES, DANVILLE, CALIFORNIA
NOTE: NO LICENSE FOR THE LANDSCAPE IRRIGATION SYSTEM DESIGN PROFESSION IS AVAILABLE IN THE STATE OF CALIFORNIA.
MEMBER: AMERICAN SOCIETY OF IRRIGATION CONSULTANTS

QUATTROCCHI KWOK ARCHITECTS
Main:
636 Fifth Street, Santa Rosa, CA 95404
East Bay:
55 Harrison Street, Suite 525,
Oakland, CA 94607
(707) 576-0829

GSM landscape architects, inc.
1700 Soscol Ave. Suite 23
Napa, CA 94559
707-255-4630
www.gsmlainc.com

REGISTERED LANDSCAPE ARCHITECT
STEVEN STRANZL
No. 2790
Exp. 10-31-22
STATE OF CALIFORNIA

FREEDOM HIGH SCHOOL

NEW AUXILIARY GYMNASIUM

1050 NEROLY RD,
OAKLEY, CA 94561

LIBERTY UNION HIGH SCHOOL DISTRICT

REVISIONS

DSA APP NO. 01-119278
ARCH PROJECT NO: 1869.00
DRAWN BY: SUT,JDE
DRAWING SCALE: 1"=20'-0"
PTN: 61721-0068 FILE NO: 7-H4
BID DOCUMENT
APRIL 27, 2021

SHEET TITLE
IRRIGATION DETAILS

SHEET NUMBER
L3.2

NON-POTABLE WATER ITEMS:
R1. VALVE BOX AND LID COLOR: RECYCLED WATER PURPLE
R2. RED WELL WATER TAG – ATTACH TO VALVE WITH A PLASTIC ZIP TIE.

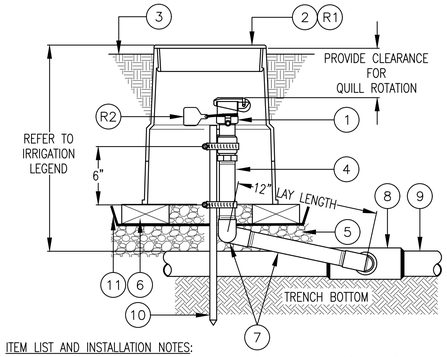

ITEM LIST AND INSTALLATION NOTES:
1. QUICK COUPLING VALVE – INSTALL VALVE PERPENDICULAR TO FINISHED GRADE UNLESS FIELD CONDITIONS REQUIRE ADJUSTMENT. INSTALL IN OUT-OF-PLAY OR PEDESTRIAN ACCESS AREAS. UNLESS OTHERWISE NOTED, FITTINGS ARE THE SAME IPT SIZE AS THE VALVE IPT INLET THREAD SIZE.
2. PLASTIC VALVE BOX AND LID, 10" ROUND, BOLT-DOWN LID – INSTALL VALVE BOX FLUSH WITH FINISH GRADE IN TURF AND 1" ABOVE FINISH GRADE IN SHRUB AREAS
3. FINISH GRADE OR TOP OF MULCH
4. PVC SCH 80 NIPPLE (LENGTH AS REQUIRED)
5. CRUSHED GRAVEL BASE, 6" DEEP
6. COMMON BRICK, 2 TOTAL, 180 DEGREES APART
7. SWING JOINT ASSEMBLY:
   A. FINGER TIGHTEN O-RING JOINTS AND BACK-OFF ONE FULL TURN TO ALLOW FOR SWING ACTION.
   B. PROVIDE 12" BETWEEN CENTER LINES OF ELBOWS ON SWING ARM.
   C. INSTALL THE SWING JOINT LAY ARM AT AN ANGLE BETWEEN 30° AND 45° OF THE LATERAL IN ORDER TO ABSORB DOWNWARD IMPACT.
   D. SWING JOINT MANUFACTURER: RAIN BIRD SWJ SERIES, 1" DURA STANDARD UNI-BODY MODEL 1-A2-2-1-12, OR APPROVED EQUAL.
8. TEE, ELBOW OR SADDLE CONNECTION (PER MAIN LINE FITTING SPECIFICATIONS)
9. MAIN LINE PIPE, (MATERIAL AND TYPE PER LEGEND AND SPECIFICATIONS)
10. #4 X 24" REBAR STAKE W/STAINLESS STEEL GEAR CLAMPS OR EQUIVALENT SUPPORT SYSTEM
11. METAL WIRE MESH TO PREVENT GOPHER INTRUSION, 1/2" MESH, 19 GA, GALVANIZED

1 QUICK COUPLING VALVE IN LANDSCAPED AREAS
NOT TO SCALE

DO NOT COPY WITHOUT WRITTEN PERMISSION OF JDE © 1999

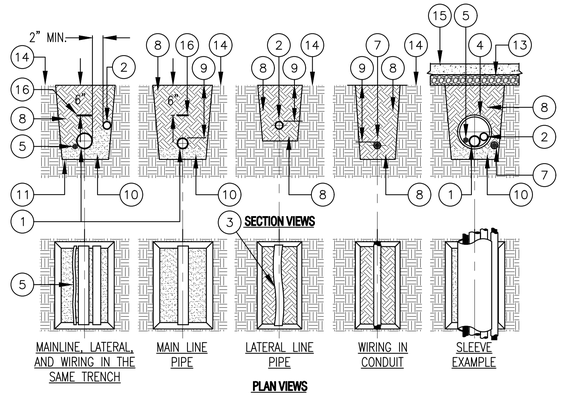

PLAN VIEWS

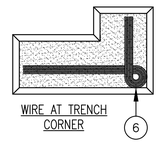

ITEM LIST AND INSTALLATION NOTES:
1. MAIN LINE PIPE; PROVIDE A MINIMUM OF 2" BETWEEN ALL PIPES.
2. LATERAL LINE PIPE; PROVIDE A MINIMUM OF 2" BETWEEN ALL PIPES.
3. SNAKE SOLVENT WELD PLASTIC PIPING IN TRENCH AS SHOWN.
4. SLEEVE BELOW ALL HARDSCAPE ELEMENTS WITH SLEEVING TWICE THE DIAMETER OF THE PIPE OR WIRE BUNDLE WITHIN.
5. WIRE BUNDLE: INSTALL WIRING BENEATH AND BESIDE MAIN LINE. TAPE AND BUNDLE AT 10-FOOT INTERVALS.
6. TIE A 24-INCH LOOP IN WIRING AT CHANGES OF DIRECTION OF 30° OR GREATER. UNTIE AFTER ALL CONNECTIONS HAVE BEEN MADE.
7. LOW VOLTAGE WIRE CONDUIT (WHERE SPECIFIED).
8. CLEAN BACKFILL PER THE SPECIFICATIONS, TYPICAL.
9. FOR PIPE, SLEEVE AND WIRE BURIAL DEPTHS, REFER TO IRRIGATION LEGEND AND SPECIFICATIONS.
10. PROVIDE A SAND BED FOR PIPE.
11. TRENCH BOTTOM OF UNDISTURBED SOIL, TYPICAL.
12. WHERE BORING UNDER EXISTING PAVEMENT IS REQUIRED – REFER TO DRAWINGS FOR SPECIFIC INFORMATION.
13. PAVEMENT AND SUBGRADE
14. FINISH GRADE
15. PAVED OR CONCRETE SURFACE
16. DETECTABLE WARNING TAPE PER SPECIFICATIONS

2 TRENCH
NOT TO SCALE

DO NOT COPY WITHOUT WRITTEN PERMISSION OF JDE © 1999

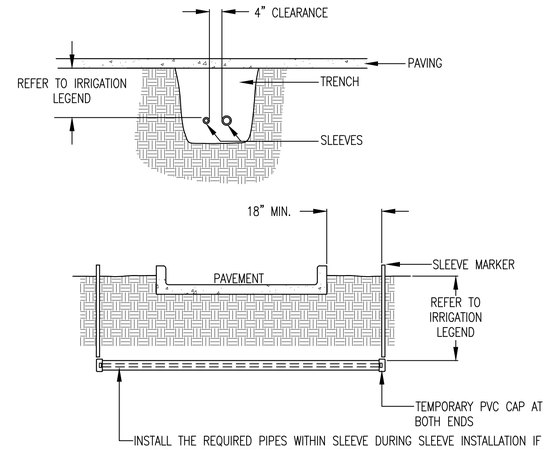

NOTES:
1. IRRIGATION SLEEVES TO BE PVC CLASS 200 OR SCH 40 PIPE. USE THE PIPE WITH THE THICKEST WALL DIMENSION.
2. JOINTS TO BE SOLVENT WELDED AND WATERTIGHT.
3. IF PIPING IS TO BE INSTALLED AFTER SLEEVING IS BACKFILLED, MARK SLEEVE LOCATION WITH A T. CHRISTY ENTERPRISES FIBERGLASS COMPOSITE MARKING POST, LABELED "IRRIGATION", EXPOSED AT GRADE, MODEL #ID-SF66-IRR.
4. MECHANICALLY TAMP BACKFILL TO 95% COMPACTION.
5. INSTALL SLEEVES LEVEL AND AFTER PIPE INSTALLATION, SEAL ENDS OF PIPE WITH GROUT TO PREVENT ROOT INTRUSION INTO THE SLEEVE.

3 SLEEVE INSTALLATION
NOT TO SCALE

DO NOT COPY WITHOUT WRITTEN PERMISSION OF JDE © 1999

INSTALLATION NOTES:
1. INSTALL QUANTITY OF BUBBLERS PER LEGEND, SEE SHEET L3.1.
2. INSTALL DEEP WATERING TUBE ADJACENT AND AGAINST THE ROOTBALL.

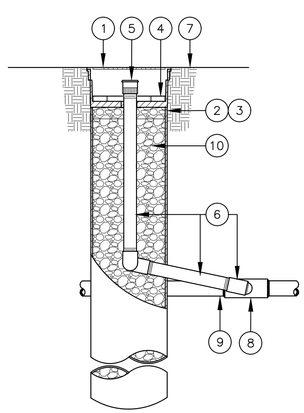

1. ROOT WATERING SYSTEM: RAIN BIRD RWS-BG (INCLUDES CANISTER, BUBBLER WITH SWING JOINT RISER AND GRATE)
2. 4" BASKET WEAVE CANISTER* –PLACE AGAINST TREE ROOTBALL
3. RAIN BIRD RWS SOCK*
4. 4" GRATE*
5. BUBBLER*
6. RAIN BIRD SWING JOINT RISER ASSEMBLY*
7. FINISH GRADE
8. PVC SCH 40 TEE OR ELL
9. LATERAL PIPE
10. PLACE DRAIN ROCK INSIDE THE CANISTER FROM UNDER THE BUBBLER PLATE TO THE BOTTOM OF THE CANISTER

* RAIN BIRD ROOT WATERING SYSTEM INCLUDES CANISTER, BUBBLER, SWING JOINT RISER, SOCK AND PURPLE GRATE

4 TREE DEEP ROOT WATERING SYSTEM
NOT TO SCALE

DO NOT COPY WITHOUT WRITTEN PERMISSION OF JDE © 1999

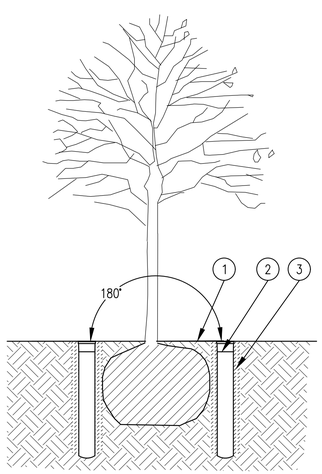

1. FINISH GRADE
2. ROOT WATERING SYSTEM: RAIN BIRD RWS-BCG (INCLUDES BUBBLER, CHECK VALVE AND GRATE)
3. RAIN BIRD RWS SOCK

NOTES:
1. WHERE TWO UNITS ARE SPECIFIED, POSITION UNITS SPACED AT 180 DEGREES AROUND ROOT BALL.
2. INSTALL PRODUCT WITH TOP GRATE EVEN WITH GROUND SURFACE.

5 TREE WATERING SYSTEM
NOT TO SCALE

DO NOT COPY WITHOUT WRITTEN PERMISSION OF JDE © 1999

NON-POTABLE WATER ITEMS:
R1. GREEN WELL WATER RISER MARKER – ATTACH TO FLEX RISER, USE T. CHRISTY ENTERPRISES RISER MARKER, MODEL #5200 WITH ADHESIVE BACKING.

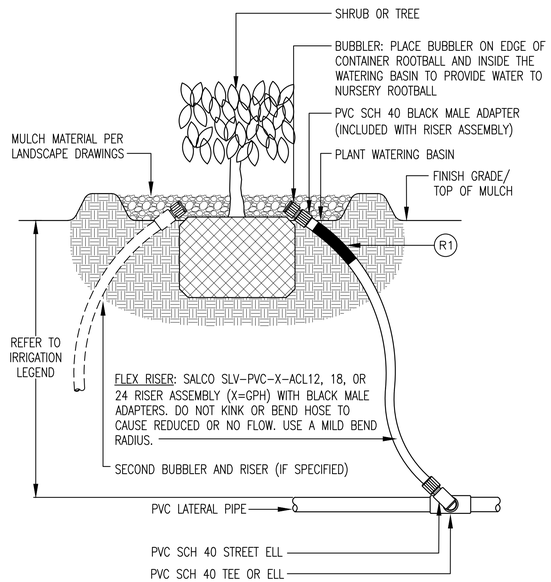

6 SHRUB OR TREE BUBBLER RISER
NOT TO SCALE

DO NOT COPY WITHOUT WRITTEN PERMISSION OF JDE ©1999

JDE
JAMES D. EDDY ASSOCIATES
LANDSCAPE IRRIGATION ENGINEERS
P.O. BOX 2291
DANVILLE, CALIFORNIA 94526
P:(925) 867-3339
EMAIL: JDE@EDDYASSOCIATES.COM
PLANNING-DESIGN-MANAGEMENT
JDE PROJECT NO: 20037

IRRIGATION DESIGNER:
James D. Eddy
JAMES D. EDDY ASSOCIATES, DANVILLE, CALIFORNIA
NOTE: NO LICENSE FOR THE LANDSCAPE IRRIGATION SYSTEM DESIGN PROFESSION IS AVAILABLE IN THE STATE OF CALIFORNIA.
MEMBER: AMERICAN SOCIETY OF IRRIGATION CONSULTANTS

QUATTROCCHI KWOK ARCHITECTS
Main:
636 Fifth Street, Santa Rosa, CA 95404
East Bay:
55 Harrison Street, Suite 525,
Oakland, CA 94607
(707) 576-0829

GSM landscape architects, inc.
1700 Soscol Ave. Suite 23
Napa, CA 94559
707-255-4630
www.gsmlainc.com

REGISTERED LANDSCAPE ARCHITECT
STEVEN STRANZL
No. 2790
Exp. 10-31-22
STATE OF CALIFORNIA

FREEDOM HIGH SCHOOL

NEW AUXILIARY GYMNASIUM

1050 NEROLY RD,
OAKLEY, CA 94561

LIBERTY UNION HIGH SCHOOL DISTRICT

REVISIONS

DSA APP NO. 01-119278

ARCH PROJECT NO:	1869.00
DRAWN BY:	SUT,JDE
DRAWING SCALE:	1"=20'-0"
PTN: 61721-0068	FILE NO: 7-H4

BID DOCUMENT

APRIL 27, 2021

SHEET TITLE

IRRIGATION DETAILS

SHEET NUMBER

L3.3

JDE

JAMES D. EDDY ASSOCIATES
LANDSCAPE IRRIGATION ENGINEERS
P.O. BOX 2291
DANVILLE, CALIFORNIA 94526
P:(925) 867-3339
EMAIL: JDE@EDDYASSOCIATES.COM
PLANNING-DESIGN-MANAGEMENT
JDE PROJECT NO: 20037

IRRIGATION DESIGNER:
James D. Eddy
JAMES D. EDDY ASSOCIATES, DANVILLE, CALIFORNIA
NOTE: NO LICENSE FOR THE LANDSCAPE IRRIGATION SYSTEM DESIGN PROFESSION IS AVAILABLE IN THE STATE OF CALIFORNIA.
MEMBER: AMERICAN SOCIETY OF IRRIGATION CONSULTANTS

IRRIGATION SCHEDULES

BUBBLER IRRIGATION @ TREES – LOW WATER USE

MANUFACTURER:	RAIN BIRD	TREE CANOPY(SQ.FT.):	19.6
MODEL:	RWS	SPECIES FACTOR(Kc):	0.3
PSI:	30	MICROCLIMATE FACTOR(Kmc):	1
GPM OF BUBBLER:	0.25	DENSITY FACTOR(Kd):	1
NO. OF BUBBLERS:	1	IRRIGATION EFFICIENCY:	0.81
GPM OF ALL BUBBLER(S):	0.25	SOIL INFILTRATION RATE(INCHES):	0.2
TREE CANOPY(FT.):	5	YEAR 2 REDUCTION AMOUNT(%):	10

MONTH		JAN	FEB	MAR	APR	MAY	JUNE	JULY	AUG	SEP	OCT	NOV	DEC	TOTAL
ADJUSTED ETO/MONTH(INCHES)		1.0	1.5	2.9	4.5	6.1	7.1	7.9	6.7	5.2	3.2	1.4	0.7	48.3
ADJUSTED ETO/WEEK(INCHES)		0.2	0.3	0.7	1.0	1.4	1.6	1.8	1.5	1.2	0.7	0.3	0.2	
MINUTES PER WEEK	YEAR 1	5	7	13	19	26	30	33	28	22	14	6	3	
	YEAR 2	5	7	12	18	24	27	30	26	20	13	6	3	
DAYS PER WEEK	YEAR 1	1	1	2	2	3	3	3	3	3	3	2	1	
	YEAR 2	1	1	2	2	3	3	3	3	3	3	2	1	
MINUTES OF WATER PER DAY	YEAR 1	5	7	7	10	9	10	11	10	8	5	3	3	
	YEAR 2	5	7	7	9	9	9	10	9	8	5	3	3	
CYCLES PER DAY TO MEET SOIL INFILTRATION RATE	YEAR 1	2	2	2	3	3	3	3	3	2	2	1	1	
	YEAR 2	2	2	2	3	3	3	3	3	2	2	1	1	
MAX. RUN TIME (MINUTES) PER CYCLE	YEAR 1	3	4	4	4	3	4	4	4	4	3	3	3	
	YEAR 2	3	4	4	3	3	3	4	3	4	3	3	3	

BUBBLER IRRIGATION @ SHRUBS – LOW WATER USE

MANUFACTURER:	RAIN BIRD	SHRUB CANOPY(SQ.FT.):	3.1
MODEL:	1401	SPECIES FACOR(Kc):	0.3
PSI:	30	MICROCLIMATE FACTOR(Kmc):	1
GPM OF BUBBLER:	0.25	DENSITY FACTOR(Kd):	1
NUMBER OF BUBBLERS:	1	IRRIGATION EFFICIENCY:	0.81
GPM OF ALL BUBBLER(S):	0.25	SOIL INFILTRATION RATE(INCHES):	0.2
SHRUB CANOPY(FT.):	2	YEAR 2 REDUCTION AMOUNT(%):	10

MONTH		JAN	FEB	MAR	APR	MAY	JUNE	JULY	AUG	SEP	OCT	NOV	DEC	TOTAL
ETO/YEAR(INCHES)		1.0	1.5	2.9	4.5	6.1	7.1	7.9	6.7	5.2	3.2	1.4	0.7	48.3
ETO/MONTH(INCHES)		0.2	0.3	0.7	1.0	1.4	1.6	1.8	1.5	1.2	0.7	0.3	0.2	
MINUTES PER WEEK	YEAR 1	1	2	2	3	5	5	6	5	4	3	1	1	
	YEAR 2	1	2	2	3	5	5	6	5	4	3	1	1	
DAYS PER WEEK	YEAR 1	1	1	2	2	3	3	3	3	3	3	2	1	
	YEAR 2	1	1	2	2	3	3	3	3	3	3	2	1	
MINUTES OF WATER PER DAY	YEAR 1	1	2	1	2	2	2	2	2	2	1	1	1	
	YEAR 2	1	2	1	2	2	2	2	2	2	1	1	1	
CYCLES PER DAY TO MEET SOIL INFILTRATION RATE	YEAR 1	2	2	2	3	3	3	3	3	2	2	1	1	
	YEAR 2	2	2	2	3	3	3	3	3	2	2	1	1	
MAX. RUN TIME (MINUTES) PER CYCLE	YEAR 1	1	1	1	1	1	1	1	1	1	1	1	1	
	YEAR 2	1	1	1	1	1	1	1	1	1	1	1	1	

BUBBLER IRRIGATION @ SHRUBS – MEDIUM WATER USE

MANUFACTURER:	RAIN BIRD	SHRUB CANOPY(SQ.FT.):	3.1
MODEL:	1401	SPECIES FACTOR(Kc):	0.5
PSI:	N/A	MICROCLIMATE FACTOR(Kmc):	1
GPM OF BUBBLER:	0.25	DENSITY FACTOR(Kd):	1
NUMBER OF BUBBLERS:	1	IRRIGATION EFFICIENCY:	0.81
GPM OF ALL BUBBLER(S):	0.25	SOIL INFILTRATION RATE(INCHES):	0.2
SHRUB CANOPY(FT.):	2	YEAR 2 REDUCTION AMOUNT(%):	10

MONTH		JAN	FEB	MAR	APR	MAY	JUNE	JULY	AUG	SEP	OCT	NOV	DEC	TOTAL
ETO/YEAR(INCHES)		1.0	1.5	2.9	4.5	6.1	7.1	7.9	6.7	5.2	3.2	1.4	0.7	48.3
ETO/MONTH(INCHES)		0.2	0.3	0.7	1.0	1.4	1.6	1.8	1.5	1.2	0.7	0.3	0.2	
MINUTES PER WEEK	YEAR 1	2	2	4	5	7	8	9	8	6	4	2	1	
	YEAR 2	2	2	4	5	7	8	9	8	6	4	2	1	
DAYS PER WEEK	YEAR 1	1	1	2	2	3	3	3	3	3	3	2	1	
	YEAR 2	1	1	2	2	3	3	3	3	3	3	2	1	
MINUTES OF WATER PER DAY	YEAR 1	2	2	2	3	3	3	3	3	2	2	1	1	
	YEAR 2	2	2	2	3	3	3	3	3	2	2	1	1	
CYCLES PER DAY TO MEET SOIL INFILTRATION RATE	YEAR 1	2	2	2	3	3	3	3	3	2	2	1	1	
	YEAR 2	2	2	2	3	3	3	3	3	2	2	1	1	
MAX. RUN TIME (MINUTES) PER CYCLE	YEAR 1	1	1	1	1	1	1	1	1	1	1	1	1	
	YEAR 2	1	1	1	1	1	1	1	1	1	1	1	1	

QUATTROCCHI KWOK
ARCHITECTS
Main:
636 Fifth Street, Santa Rosa, CA 95404
East Bay:
55 Harrison Street, Suite 525,
Oakland, CA 94607
(707) 576-0829

GSM landscape architects, inc.
1700 Soscol Ave. Suite 23
Napa, CA 94559
707-255-4630
www.gsmlainc.com

REGISTERED LANDSCAPE ARCHITECT
STEPHEN STRANZL
No. 2790
Exp. 10-31-22
STATE OF CALIFORNIA

FREEDOM HIGH SCHOOL

NEW AUXILIARY GYMNASIUM

1050 NEROLY RD,
OAKLEY, CA 94561

LIBERTY UNION HIGH SCHOOL DISTRICT

REVISIONS

DSA APP NO. 01-119278

ARCH PROJECT NO: 1869.00
DRAWN BY: SUT,JDE
DRAWING SCALE: 1"=20'-0"
PTN: 61721-0068 FILE NO: 7-H4

BID DOCUMENT

APRIL 27, 2021

SHEET TITLE

IRRIGATION SCHEDULES

SHEET NUMBER

L3.4

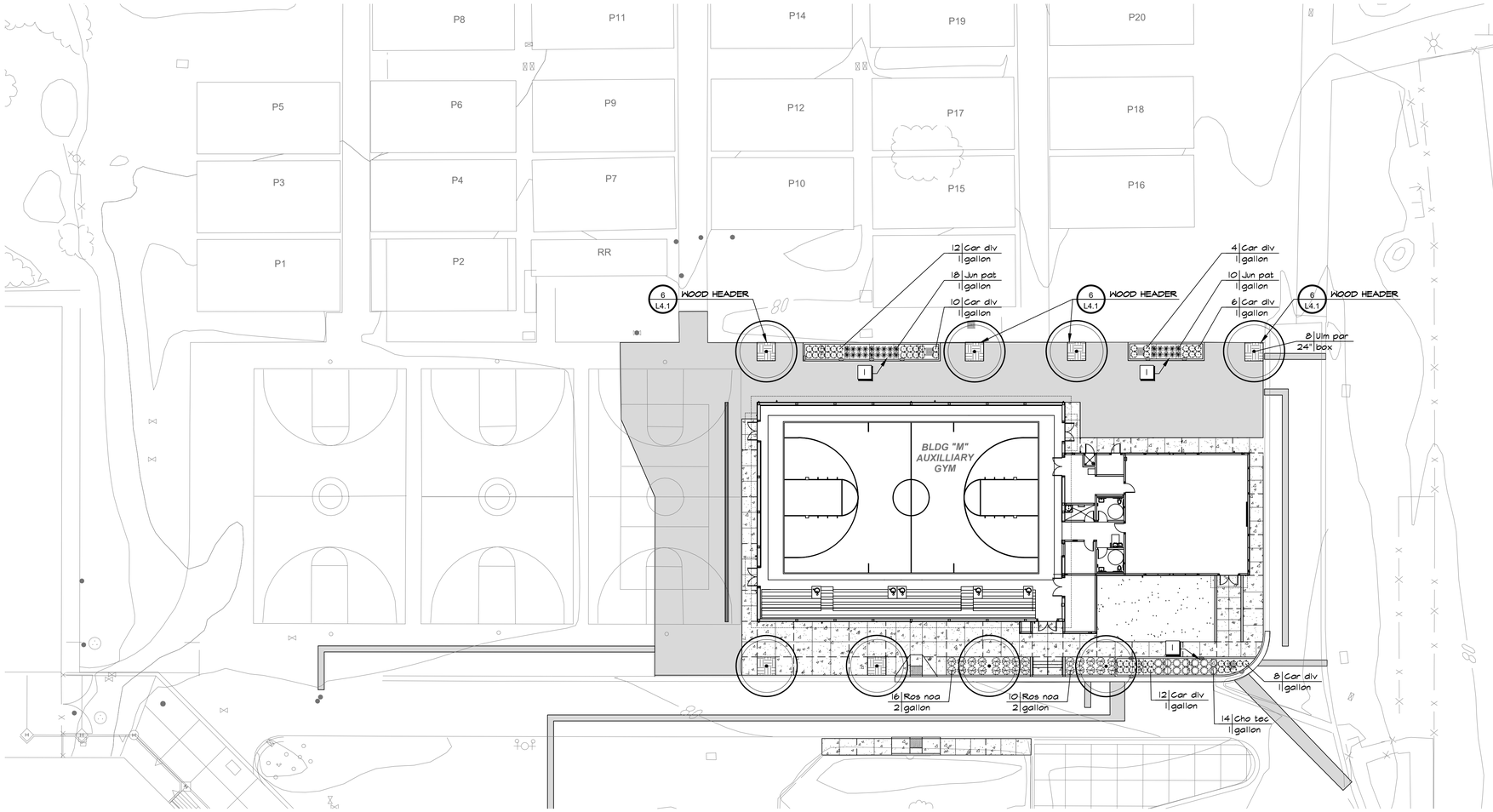

KEY NOTES

1 Biofiltration Facilities. See Civil Drawings.

PLANT LEGEND

SYMBOL		BOTANICAL NAME COMMON NAME	SIZE	WATER USE	QUANTITY
TREES					
	Ulm par	Ulmus parvifolia 'True Green' True Green Chinese Elm, Semievergreen	24" box	L	8
SHRUBS					
	Ros noa	Rosa 'Noaschnee' White Flower Carpet Rose	2 gallon	M	26
BIOFILTRATION FACILITIES					
	Car div	Carex divulsa Berkeley Sedge	1 gallon	L	52
	Cho tec	Chondropetalum tectorum Cape Rush	1 gallon	L	14
	Jun pat	Juncus patens California Gray Rush	1 gallon	L	28

LANDSCAPE MATERIALS

Synthetic Turf. See Material and Detail Reference Plan.

Landscape Mulch: Weed fabric and 3" thick mulch (shown graphically for areas not planted). All planting areas shall have weed fabric and 3" depth of mulch applied. See Planting Notes on L4.1 for mulch type.

NORTH

0 20' 40'

SCALE: 1"=20'-0"

Existing features and topographic information have been taken from a Survey provided by CBG, dated September 17, 2020. GSM landscape architects, Inc. assumes no liability, real or alleged, regarding the accuracy of existing features or topographic information shown.

QUATTROCCHI KWOK ARCHITECTS
Main:
636 Fifth Street, Santa Rosa, CA 95404
East Bay:
55 Harrison Street, Suite 525,
Oakland, CA 94607
(707) 576-0829

GSM landscape architects, inc.
1700 Soscol Ave. Suite 23
Napa, CA 94559
707-255-4630
www.gsmlainc.com

REGISTERED LANDSCAPE ARCHITECT
STEPHEN STRANZL
No. 2790
Exp. 10-31-22
STATE OF CALIFORNIA

FREEDOM HIGH SCHOOL

NEW AUXILIARY GYMNASIUM

1050 NEROLY RD,
OAKLEY, CA 94561

LIBERTY UNION HIGH SCHOOL DISTRICT

REVISIONS

DSA APP NO. 01-119278

ARCH PROJECT NO:	1869.00
DRAWN BY:	BTI, HDJ
DRAWING SCALE:	1"=20'-0"
PTN: 61721-0068	FILE NO: 7-H4

BID DOCUMENT

APRIL 27, 2021

SHEET TITLE

PLANTING PLAN

SHEET NUMBER

L4.0

PLANTING NOTES

1. Prior to commencement of planting, the Contractor shall verify locations of all underground utilities.
2. Contractor shall adjust all plant material around electrical utilities, valve boxes, etc., as required in the field.
3. All landscape grades shall be smooth and feathered in appearance.
4. Irrigation system shall be fully operational prior to planting. Contractor shall thoroughly water all plants immediately after planting.
5. All trees shall be staked and installed per planting details. All trees shall be of adequate trunk caliper to stand without support.
6. Installing Contractor shall verify existing grade in the field prior to planting. Finished surfaces shall be uniform and smooth. Finished grade of planting and bark mulch areas shall be flush with top of edging, pavement and walks.
7. Soil for all exposed soil and planting areas except sod and bioretention areas shall receive weed fabric and a 3" minimum depth of bark mulch. Bark mulch shall be Eco-Mini Natural Mulch, as available through EcoMulch, 5010 Pacheco Blvd., Martinez, (925) 228-1673. Bioretention areas shall receive 3" minimum depth of the compost used in the bioretention soil mix.
8. All trees planted within 8' of adjacent paving, curbing, hardscape, water meters, joint trenches, etc. shall receive Deep Root Barrier UB 24-2 (24" depth x 10' min. length) as manufactured by Deep Root Partners (800) 458-7668, or approved equal.
9. No plant material shall be substituted without prior written consent from the Landscape Architect.
10. Contractor shall be responsible for the pre-ordering of all plant material after the Notice to Proceed. Photographs for all plants shall be submitted to the Landscape Architect prior to placing order.
11. All plant material shall be certified by the Agricultural Commissioner inspection program for freedom from the glassy winged sharpshooter or other pests identified by the Agricultural Commissioner. The Agricultural Commissioner's office shall be notified of all impending deliveries of live plants with points of origin outside of the County so that inspection can be arranged.
12. All plants of the same type and container size shall be matched in height and width.
13. The Plant Legend is provided for convenience only, not accurate bidding purposes. Graphic depiction of plant material shall take precedence over stated quantities. Contractor shall notify the Architect to obtain clarification if there are discrepancies.

SOILS MANAGEMENT NOTES

A. The following organic amendments, soil amendments and fertilizer rates and quantities shall be used for bid basis only. Contractor shall arrange and pay for soil fertility testing by an accredited soils laboratory of existing site soil after rough grading operations are complete, and shall amend the soils, according to said laboratory's recommendations. The soils recommendations shall be considered a part of these contract documents. The soils report must provide the following information:
   1. Soil permeability rate in inches per hour.
   2. Soil texture test.
   3. Cation exchange capacity.
   4. Soil fertility, including test for nitrogen, potassium, phosphorous, pH, organic matter and specific conductance (electrical conductivity).
   5. Recommendation for amendments to the planting area soil.

B. Topsoil: All landscape areas shall have a minimum 8" depth of topsoil with greater depths as required for planting work. Contractor shall provide topsoil which is fertile and friable, possessing characteristics of representative productive soils on the site. It shall not contain toxic substances which may be harmful to plant growth. When herbicide contamination is suspected then a radish/rye grass growth trial must be performed. Consult with the District prior to decision to test. It shall be uniformly textured and free of all objectionable foreign materials, oil or chemicals which may be injurious to plant growth. Natural topsoil shall possess a pH factor between 5.5 and 7.5, a sodium absorption ratio (SAR) of less than 8, a boron concentration of the saturation extract of less than 1 ppm, and salinity of the saturation extract at 25 degrees C. of less than 4.0 millimhos per centimeter. If required to import topsoil, Contractor shall obtain topsoil from naturally well-drained sites where topsoil occurs in a depth of not less than four inches (4"); do not obtain from bogs or marshes.

C. Organic Amendment: Nitrified fir bark having a minimum organic content of 94% and a nitrogen content of 0.8% minimum to 1.2% maximum on a dry weight basis. Fir bark shall be shredded to pass a one quarter inch (1/4") mesh screen. Incorporate organic amendment and fertilizer into the soil to a minimum depth of six inches (6") at a minimum rate of six cubic yards (6 cy) per one thousand square feet (1,000 sf) or per specific amendment recommendations from the soils report.

D. Fertilizer:
   1. Fertilizer shall be a commercial inorganic fertilizer in the granular or pelleted form. Fertilizer shall be delivered to the site in containers labeled in accordance with the applicable State of California regulations, bearing the warranty of the producer or the grade furnished, and shall be uniform in composition, dry and free-flowing.
   2. Turf, Shrubs and Vines:
      a. 6N-20P-20K, and 16-6-8, pelleted type.
      b. Sulphate - sulphur
      c. Lime for pH adjustment of moderately acid soil
      d. Starting one (1) month after planting, on a monthly basis, 21N-0P-0K Ammonium sulfate. 5 lbs. per 1,000 square feet.
   3. Trees:
      a. 21 gram 20N-10P-5K slow release fertilizer tablets as manufactured by Agriform. Apply according to manufacturer's instructions.
      b. After planting: 21N-0P-0K Ammonium sulfate 5lbs. per 1,000 square feet.

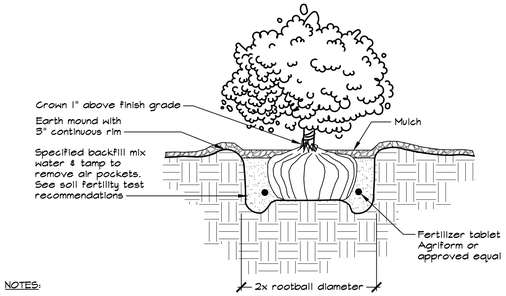

NOTES:
1. Root ball shall rest on undisturbed soil.
2. Plant tablets shall be equally spaced around root ball. The number of tablets shall be 1 for 4" pot or liner, 2 for 1 gallon, 3 for 5 gallon, and 4 for 15 gallon, or as specified in the soils fertility test recommendations.
3. Contractor shall water planting pit thoroughly following planting.
4. See Planting Notes on this sheet for mulch specification.

1 SHRUB/GROUNDCOVER PLANTING
NOT TO SCALE

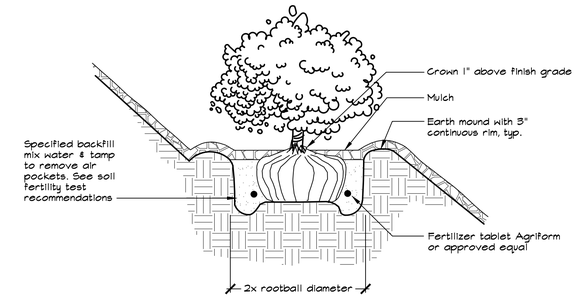

NOTES:
1. Root ball shall rest on undisturbed soil.
2. Plant tablets shall be equally spaced around root ball. The number of tablets shall be 1 for 4" pot or liner, 2 for 1 gallon, 3 for 5 gallon, and 4 for 15 gallon, or as specified in the soils fertility test recommendations.
3. Contractor shall water planting pit thoroughly following planting.
4. See Planting Notes on this sheet for mulch specification.

2 HILLSIDE SHRUB/GROUNDCOVER PLANTING
NOT TO SCALE

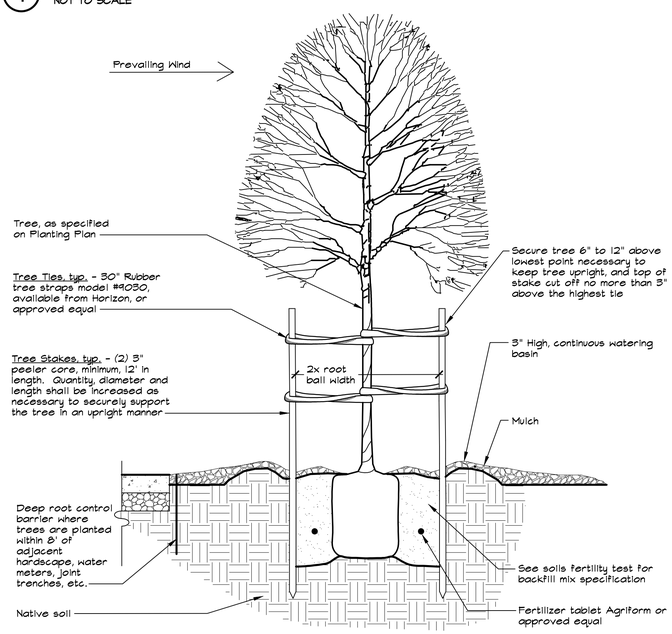

NOTES:
1. Root ball shall rest on undisturbed soil.
2. Plant tablets shall be equally spaced around root ball. The number of tablets shall be 4 for 15 gallon and 6 for 24", 36" box, or as specified in the soils fertility test recommendations.
3. Contractor shall water planting pit thoroughly following planting.
4. Trees shall be staked parallel with the direction of the prevailing wind.
5. Tree stakes shall have equal degree of separation between stakes.
7. Contractor shall use Deep Root Barrier where trees are planted within 8' of adjacent hardscape, water meters, joint trenches, etc. See Planting Notes on Planting Plan for more information.
8. See Planting Notes on this sheet for mulch specification.

3 TREE PLANTING AND STAKING
NOT TO SCALE

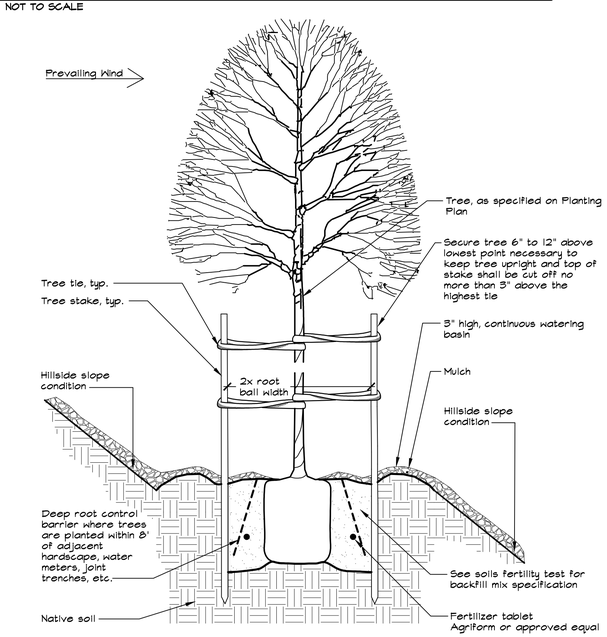

NOTES:
1. Root ball shall rest on undisturbed soil.
2. Plant tablets shall be equally spaced around root ball. The number of tablets shall be 4 for 15 gallon and 6 for 24", 36" box, or as specified in the soils fertility test recommendations.
3. Contractor shall water planting pit thoroughly following planting.
4. Trees shall be staked parallel with the direction of the prevailing wind.
5. Tree stakes shall have equal degree of separation between stakes.
7. Contractor shall use Deep Root Barrier where trees are planted within 8' of adjacent hardscape, water meters, joint trenches, etc. See Planting Notes on Planting Plan for more information.
8. See Planting Notes on this sheet for mulch specification.

4 HILLSIDE TREE PLANTING AND STAKING
NOT TO SCALE

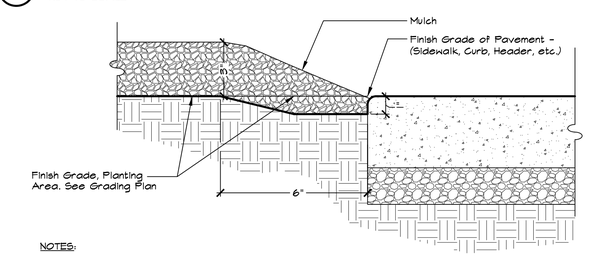

NOTES:
1. Grading shall provide for natural runoff of water without low spots or pockets.
2. See Planting Notes on this sheet for mulch specification.

5 MULCH
NOT TO SCALE

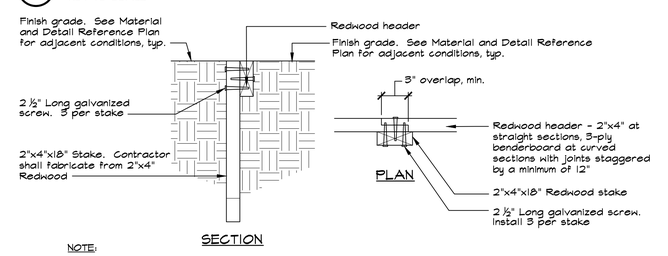

NOTE:
1. Wood header and stakes shall be Redwood Construction Heart or better, or approved equal.

6 WOOD HEADER
NOT TO SCALE

QUATTROCCHI KWOK ARCHITECTS
Main:
636 Fifth Street, Santa Rosa, CA 95404
East Bay:
55 Harrison Street, Suite 525,
Oakland, CA 94607
(707) 576-0829

GSM landscape architects, inc.
1700 Soscol Ave. Suite 23
Napa, CA 94559
707-255-4630
www.gsmlainc.com

REGISTERED LANDSCAPE ARCHITECT
STEPHEN STRANZL
No. 2790
Exp. 10-31-22
STATE OF CALIFORNIA

FREEDOM HIGH SCHOOL

NEW AUXILIARY GYMNASIUM

1050 NEROLY RD,
OAKLEY, CA 94561

LIBERTY UNION HIGH SCHOOL DISTRICT

REVISIONS

DSA APP NO. 01-119278

ARCH PROJECT NO:	1869.00
DRAWN BY:	BTI, HDJ
DRAWING SCALE:	1"=20'-0"
PTN: 61721-0068	FILE NO: 7-H4

BID DOCUMENT

APRIL 27, 2021

SHEET TITLE

PLANTING DETAILS

SHEET NUMBER

L4.1

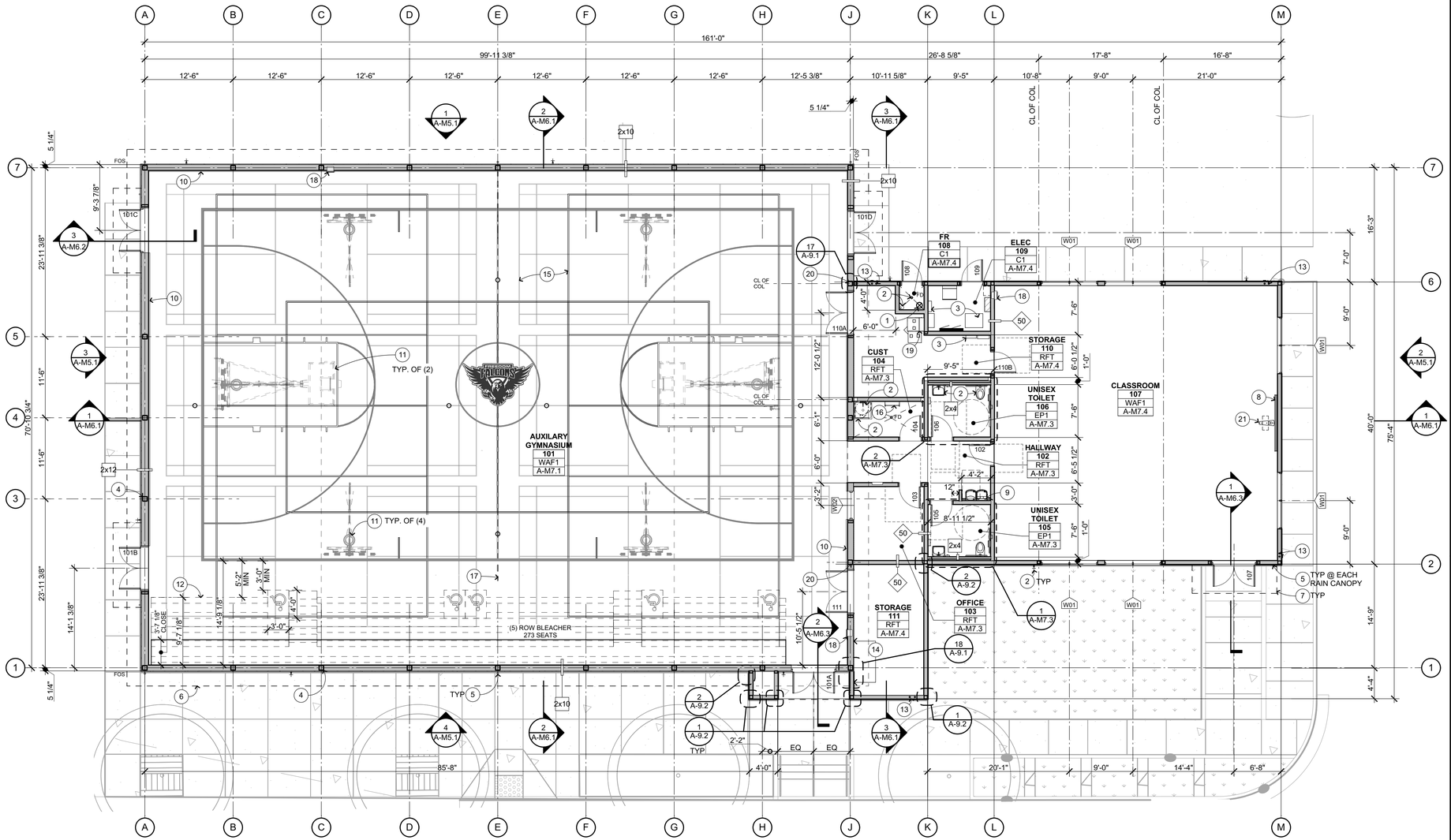

FLOOR PLAN 1

1/8" = 1'-0"

PLAN NORTH

0 4' 8' 16'

FLOOR PLAN KEYNOTES

1. FIRE SPRINKLER RISER, S.P.D. & S.F.D.
2. PLUMBING ITEM / FIXTURE, S.P.D.
3. ELECTRICAL ITEM, S.E.D.
4. STRUCTURAL ITEM, S.S.D.
5. RAIN WATER LEADER S.C.D. — 1/A-9.5, 6/A-9.5
6. LINE OF ROOF, SEE ROOF PLAN
7. LINE OF RAIN CANOPY ABOVE
8. MARKER BOARD — 3/A-10.3
9. ACCESSIBLE HIGH/LOW DRINKING FOUNTAIN WITH BOTTLE FILLER, S.P.D. — 7/A-10.3
10. 6'-0" WALL PADS, SEE INTERIOR ELEVATIONS
11. MOTORIZED RETRACTABLE BASKETBALL EQUIPMENT ABOVE. FOR SUPPORT S.S.D.; FOR POWER S.E.D.
12. MOTORIZED TELESCOPIC BLEACHERS, SEE BLEACHER DRAWINGS. FOR POWER PROVISION, S.E.D.
13. ROOF DRAINS, S.P.D; S.C.D.
14. FLUSH INTERIOR FINISH
15. SPORTS GAME STRIPING, SEE STRIPING PLAN — 1/A-M2.2
16. ROOF ACCESS LADDER — 23/A-9.5, 24/A-9.5
17. MOTORIZED DIVIDER CURTAIN, S.S.D. FOR SUPPORT
18. SEMI-RECESSED FIRE CABINET AND EXTINGUISHER — 9/A-10.3
19. AUDIO VISUAL EQUIPMENT, S.AV.D.
20. CENTER LINE OF COLUMN IS TO CENTER LINE OF PERPENDICULAR WALL
21. SHORT THROW PROJECTOR, PROVIDE BLKG — 1/A-10.3

FLOOR FINISH CODES

WAF1	CUSHIONED WOOD ATHLETIC FLOOR	4/A-10.4, 8/A-10.4, 12/A-10.4
EP1	FLUID APPLIED FLOORING	13/A-10.3
RFT	RESILIENT FLOOR TILE	
C1	SEALED CONCRETE	

FOR TYPICAL FLOORING TRANSITION SEE 15/A-10.3, 4/A-10.4 SIM

FLOOR PLAN GENERAL NOTES

1. EXTERIOR CONCRETE FLATWORK SHALL HAVE A MAXIMUM SLOPE OF 1:20, U.N.O.: EXTERIOR DOOR LANDINGS SHALL SLOPE 1/4" PER FOOT FOR 60" PERPENDICULAR TO DOOR FACE, MAXIMUM FOR DRAINAGE. CONCRETE SHALL SLOPE MINIMUM 1/8" PER FOOT AWAY FROM BUILDINGS. S.C.D.
2. CONCRETE WALKS, S.C.D; S.L.D.
3. S.C.D. FOR FINISHED FLOOR ELEVATIONS. SLAB DEPRESSIONS S.S.D. FOR ELEVATIONS RELATIVE TO THE REST OF THE SITE, REFER TO CIVIL ENGINEERING DRAWINGS.
4. REFER TO CIVIL ENGINEERING DRAWINGS AND SITE PLAN FOR SITE FEATURES NOT OTHERWISE INDICATED.
5. REFER TO ARCHITECTURAL GRAPHICS DRAWINGS FOR SIGNAGE NOT SHOWN.
6. ALL INTERIOR WALL FRAMING AND GYP.BD. EXTEND TO UNDERSIDE OF ROOF/FLOOR STRUCTURE ABOVE, U.O.N.

WALL TYPE LEGEND

S.S.D. FOR WOOD FRAMING SIZES FOR ALL BEARING WALLS. ALL OTHER WALLS ARE 2X6 WOOD STUDS U.O.N.

- WOOD FRAMING - NON RATED — 14/A-9.1, 15/A-9.1
- 50 — ACOUSTIC RATING (STC). — 19/A-9.1, 20/A-9.1
- 2x8 — WOOD STUD SIZE

KEYPLAN

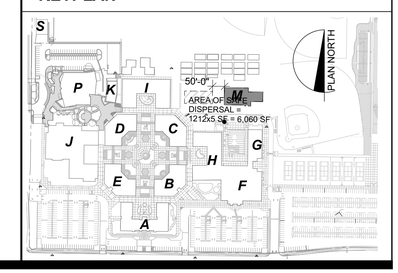

QUATTROCCHI KWOK ARCHITECTS

Main:
636 Fifth Street, Santa Rosa, CA 95404
East Bay:
55 Harrison Street, Suite 525,
Oakland, CA 94607
(707) 576-0829

LICENSED ARCHITECT
JIM THEISS
LICENSE # C22643
EXP JUNE 30, 2021
STATE OF CALIFORNIA

SIGNED: MAY 5, 2021

FREEDOM HIGH SCHOOL

NEW AUXILIARY GYMNASIUM

1050 NEROLY RD,
OAKLEY, CA 94561

LIBERTY UNION HIGH SCHOOL DISTRICT

DSA APP NO. 01-119278

ARCH PROJECT NO:	1869.00
DRAWN BY:	GRD
DRAWING SCALE:	1/8" = 1'-0"
PTN: 61721-78	FILE NO: 7-H4

BID DOCUMENT

APRIL 27, 2021

SHEET TITLE

FLOOR PLAN

SHEET NUMBER

A-M2.1

BIMcloud: archiserver - BIMcloud Basic for ARCHICAD 22/1869.00 Freedom HS Aux. Gym. CD:4/27/2021:1:26 PM

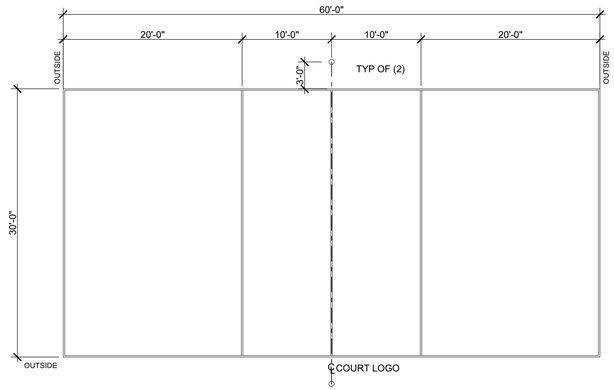

VOLLEYBALL COURT LINE MARKINGS (3)

1/8" = 1'-0"

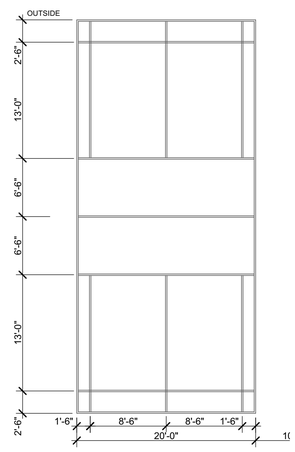

BADMITTON COURT LINE MARKINGS (4)

1/8" = 1'-0"

SCHOOL LOGO (6)

1/4" = 1'-0"

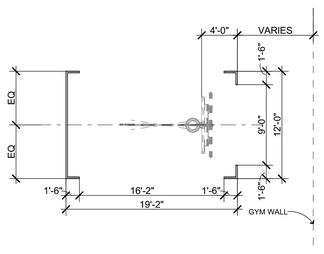

PRACTICE BASKETBALL COURT MARKINGS (5)

1/8" = 1'-0"

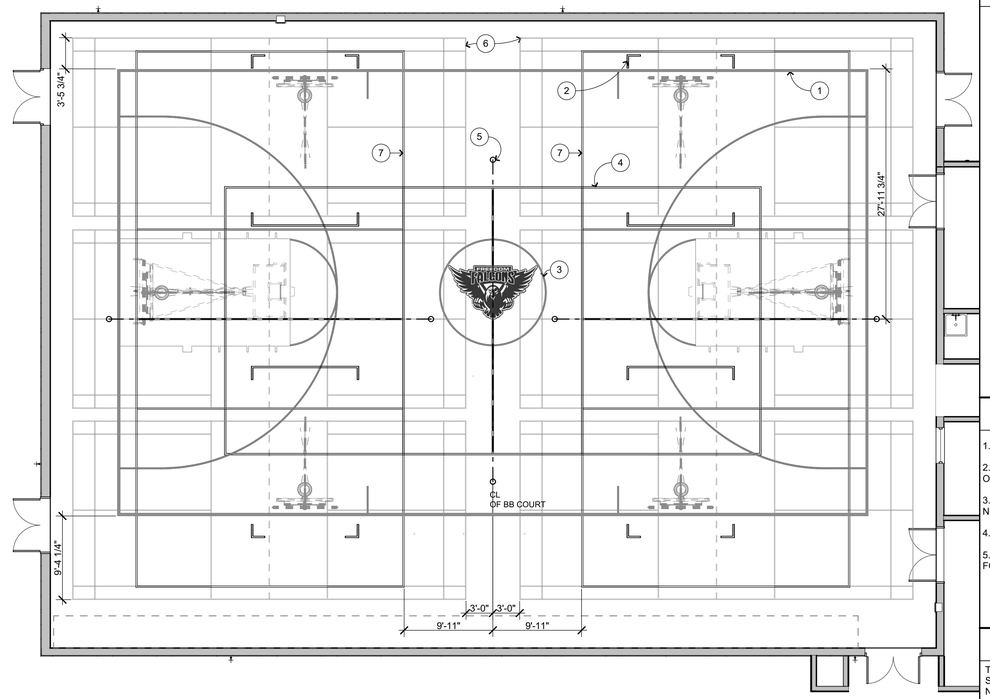

GAME COURTS COMPOSITE STRIPING PLAN (1)

1/8" = 1'-0"

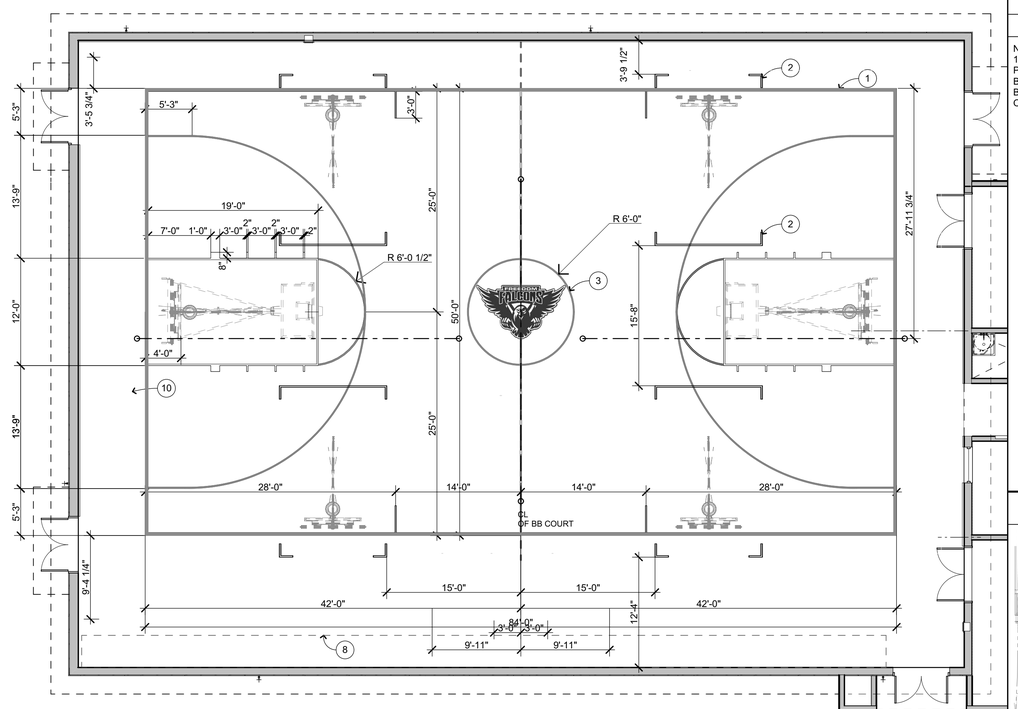

BASKETBALL COURT LINE MARKINGS (2)

1/8" = 1'-0"

STRIPING PLAN KEYNOTES

1. MAIN BASKETBALL COURT, (2 / A-M2.2)
2. PRACTICE BASKETBALL COURTS (4), (5 / A-M2.2)
3. SCHOOL LOGO, SEE (6 / A-M2.2)
4. MAIN VOLLEYBALL COURT, (3 / A-M2.2)
5. VOLLEYBALL POLE FLOOR SLEEVES (6) (3 / A-10.4)
6. BADMINTON COURT (4 / A-M2.2)
7. PRACTICE VOLLEYBALL COURT (2)
8. BLEACHERS IN RETRACTED POSITION

GENERAL NOTES

1. VERIFY ALL STRIPING COLORS WITH DISTRICT PRIOR TO INSTALL.
2. ALL DIMENSIONS ARE TO THE PLAYING SIDE OF THE STRIPE UNLESS OTHERWISE NOTED.
3. BASKETBALL AND VOLLEYBALL STRIPES ARE 2" WIDE UNLESS OTHERWISE NOTED.
4. BADMINTON STRIPES ARE 1" WIDE.
5. CONTRACTOR TO PROVIDE VOLLEYBALL AND BADMINTON EQUIPMENT FOR NUMBER AND CONFIGURATION OF COURTS INDICATED.

STRIPING MATRIX

THE STRIPING FOR A COURT LOWER ON THE MATRIX SHALL BREAK FOR THE STRIPING FOR A COURT HIGHER ON THE MATRIX WITH EXCEPTIONS AS NOTED.

COURT	COLOR	NOTES
MAIN BASKETBALL	BLACK	
MAIN VOLLEYBALL	TBD	1
PRACTICE VOLLEYBALL	TBD	1
BADMINTON	TBD	1
PRACTICE BASKETBALL	TBD	1

NOTE:
1. WHEN THE PRACTICE OR MAIN VOLLEYBALL COURT LINES OR THE PRACTICE BASKETBALL LINES CROSS THE MAIN BASKETBALL BORDER, THE BASKETBALL BORDER SHALL BE A SHADE LIGHTER SO THAT THE LINES CAN BE FOLLOWED THROUGH THE BORDERS. THE LINES HSALL RESUME THEIR ORIGINAL COLOR ON EITHER SIDE OF THE BASKETBALL BORDER.

KEYPLAN

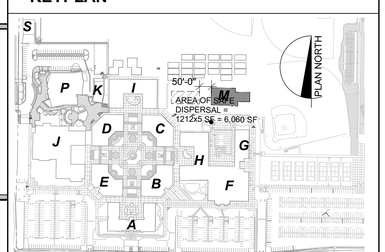

QUATTROCCHI KWOK ARCHITECTS

Main:
636 Fifth Street, Santa Rosa, CA 95404
East Bay:
55 Harrison Street, Suite 525,
Oakland, CA 94607
(707) 576-0829

LICENSED ARCHITECT
JIM THEISS
LICENSE # C22643
EXP JUNE 30, 2021
STATE OF CALIFORNIA

SIGNED: MAY 5, 2021

FREEDOM HIGH SCHOOL

NEW AUXILIARY GYMNASIUM

1050 NEROLY RD,
OAKLEY, CA 94561

LIBERTY UNION HIGH SCHOOL DISTRICT

DSA APP NO. 01-119278

ARCH PROJECT NO: 1869.00
DRAWN BY:
DRAWING SCALE:
PTN: 61721-78 FILE NO: 7-H4

BID DOCUMENT

APRIL 27, 2021

SHEET TITLE

COMPOSITE COURT STRIPING PLAN

SHEET NUMBER

A-M2.2

BIMcloud: archiserver - BIMcloud Basic for ARCHICAD 22/1869.00 Freedom HS Aux. Gym CD:4/27/2021;1:26 PM

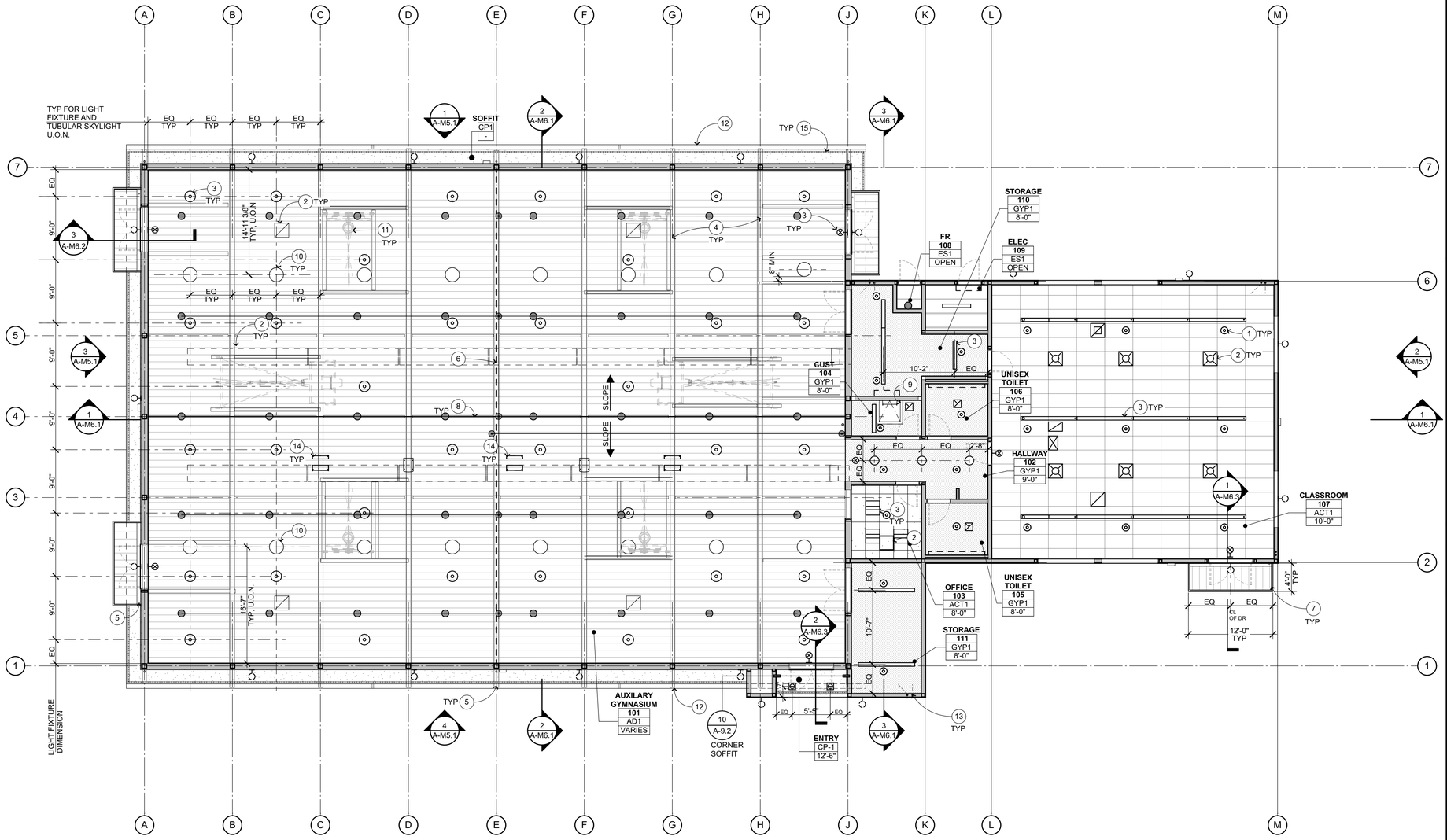

REFLECTED CEILING PLAN 1

1/8" = 1'-0"

REFLECTED CEILING PLAN KEYNOTES

1. FIRE PROTECTION ITEM, S.F.P.D.
2. MECHANICAL ITEM, S.M.D.
3. ELECTRICAL ITEM, S.E.D.
4. STRUCTURAL ITEM, S.S.D.
5. RAIN WATER LEADER
6. MOTORIZED DIVIDER CURTAIN, S.S.D. (6 / S-M5.2)
7. RAIN CANOPY (7 / A-9.7) (8 / A-9.7)
8. ROOF RIDGE
9. ROOF ACCESS HATCH (15 / A-9.5) (16 / A-9.5)
10. TUBULAR SKYLIGHT (9 / A-9.5)
11. MOTORIZED RETRACTABLE BASKETBALL EQUIPMENT ABOVE. FOR SUPPORT S.S.D.; FOR POWER S.E.D.
12. GUTTER (16 / A-9.4)
13. ROOF DRAINS ABOVE CLG, S.P.D; S.C.D.
14. AUDIO VISUAL EQUIPMENT, S.AV.D.
15. 1" SOFFIT VENT

REFLECTED CEILING PLAN GENERAL NOTES

1. NOTES & SYMBOLS ARE TO APPLY TO ALL AREAS OF SIMILAR GRAPHIC REPRESENTATION. SUCH INDICATIONS MAY BE LIMITED TO PROMOTE CLARITY OR AVOID REDUNDANCY. NO LIMITATION OF APPLICATION SHALL BE CONSTRUED WITHOUT SPECIFIC NOTATION.
2. PENDANT LIGHT FIXTURE LOCATION DIMENSIONS ARE NOMINAL. VERIFY IN FIELD TO MAINTAIN 45° SWING CLEARANCES TO FIXED ELEMENTS.
3. S.E.D. FOR HORNS, SPEAKERS, PULL STATIONS, LIGHT FIXTURES AND OTHER FEATURES NOT OTHERWISE SHOWN.
4. S.E.D. FOR EXIT SIGNS & EMERGENCY LIGHTING CONDITIONS.
5. S.M.D. FOR PIPING, REGISTERS & VENTS NOT OTHERWISE SHOWN. MECHANICAL DUCT LOCATION DIMENSIONS ARE NOMINAL. VERIFY IN FIELD TO MAINTAIN CLEARANCES TO FIXED ELEMENTS.
6. CBC TABLE 601- ROOFS AND THEIR MEMBERS OTHER THAN THE STRUCTURAL FRAME MAY BE OF UNPROTECTED NON-COMBUSTIBLE MATERIALS WHEN EVERY PART OF ROOF FRAMING INCLUDING THE STRUCTURAL FRAME IS 20 FEET OR MORE ABOVE THE FLOOR IMMEDIATELY BELOW.
7. COORDINATE ACCESS PANEL LOCATIONS WITH MECHANICAL

REFLECTED CEILING PLAN LEGEND AND CODE

FOR PAINT FINISHES SEE SEC. 099123

10'-0"
ROOM NAME
ROOM #
CL-XX
X'-X"

CL-XX REFERS TO CEILING FINISH CODE SEE BELOW. X'-X" REFERS TO FINISHED CEILING HEIGHT AFF. WHERE CEILING HEIGHT IS INDICATED AS "OPEN" OR " - ", ROOM IS OPEN TO STRUCTURE ABOVE. FOR CEILING CONFIGURATION & HEIGHT WHERE CEILING HEIGHT IS INDICATED AS CURVED, SLOPING, OR VARIES, REFER TO SECTION DRAWINGS.

GYP1	GYPSUM BOARD O/ FRAMING, S.S.D.	
ACT1	2'x4' SUSPENDED CEILING SYSTEM W/ ACOUSTIC TILE, SEE FINISH CODES	(1 / A-10.1)
CP1	EXTERIOR CEMENT PLASTER W/ CONTROL JOINTS AS SHOWN	(4 / A-9.1)
AD1	ACOUSTICAL METAL ROOF DECK S.S.D.	(3 / A-10.2)
ES1	EXPOSED STRUCTURE	

DOORS SHOWN DASHED INDICATE DOOR BELOW

ELECTRICAL ITEMS, S.E.D.

MECHANICAL ITEMS, S.M.D.

FIRE SPRINKLERS, S.F.P.D.

KEYPLAN

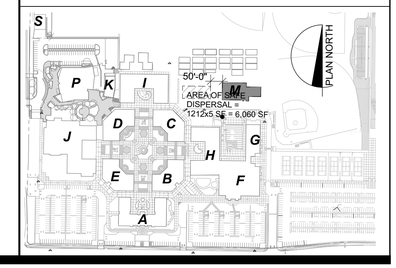

QUATTROCCHI KWOK ARCHITECTS
Main:
636 Fifth Street, Santa Rosa, CA 95404
East Bay:
55 Harrison Street, Suite 525,
Oakland, CA 94607
(707) 576-0829

LICENSED ARCHITECT
JIM THEISS
LICENSE # C22643
EXP JUNE 30, 2021
STATE OF CALIFORNIA
SIGNED: MAY 5, 2021

FREEDOM HIGH SCHOOL

NEW AUXILIARY GYMNASIUM

1050 NEROLY RD,
OAKLEY, CA 94561

LIBERTY UNION HIGH SCHOOL DISTRICT

DSA APP NO. 01-119278

ARCH PROJECT NO:	1869.00
DRAWN BY:	GRD
DRAWING SCALE:	1/8" = 1'-0"
PTN: 61721-78	FILE NO: 7-H4

BID DOCUMENT

APRIL 27, 2021

SHEET TITLE

REFLECTED CEILING PLAN

SHEET NUMBER

A-M3.1

BIMcloud: archiserver - BIMcloud Basic for ARCHICAD 22/1869.00 Freedom HS Aux. Gym CD 4/27/2021 1:26 PM

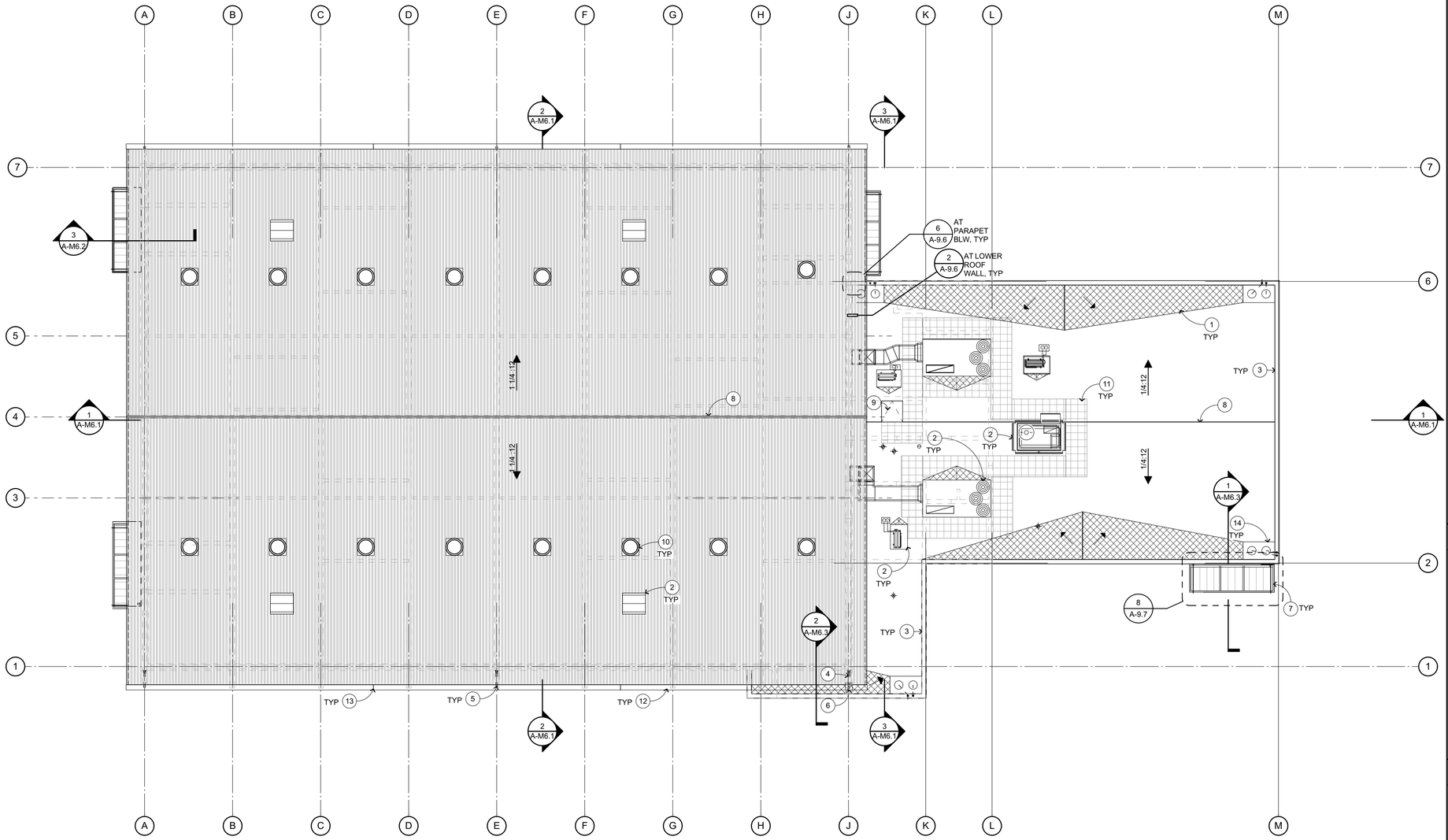

ROOF PLAN 1

1/8" = 1'-0"

PLAN NORTH

0 4' 8' 16'

ROOF PLAN KEYNOTES

1. CRICKET
2. MECHANICAL ITEM S.M.D., AT MTL ROOF: FLASHING TO BE ETCHED, PRIMED AND PAINTED TO MATCH THE ROOF, SEE DETAILS 4/A-9.5 3/A-9.6
3. PARAPET WALL, SEE DETAIL 5/A-9.6
4. RAINWATER LEADER, DISCHARGE TO LOWER ROOF, SEE 5/A-9.5
5. RAIN WATER LEADER, SEE DETAIL 1/A-9.5
6. SPLASH PAN, SEE DETAIL 10/A-9.5
7. RAIN CANOPY AT LOW ROOF
8. ROOF RIDGE
9. ROOF ACCESS HATCH, SEE DETAIL 15/A-9.5
10. 21" DIA TUBULAR SKYLIGHT, FLASHING TO BE ETCHED, PRIMED AND PAINTED TO MATCH THE ROOF, SEE DETAIL 9/A-9.5
11. WALK PADS
12. GUTTER, SEE DETAIL 16/A-9.4
13. GUTTER EXPANSION JT, SEE DETAIL 23/A-9.4
14. ROOF DRAIN, S.P.D. AND SEE DETAIL 14/A-9.6

ROOF PLAN GENERAL NOTES

1. LOCATE ALL METAL ROOF PENETRATIONS IN THE CENTER OF THE PAN. DO NOT INTERRUPT STANDING SEAMS.
2. MINIMUM THICKNESS OF RIGID INSULATION TO BE 1" AT LOW POINT OF ROOF. SLOPE MIN. 1/4": 12" TO DRAIN. ALL RIGID INSULATION OVERLAID WITH WITH 1/2" COVER BOARD.
3. ALL ROOFING TO BE CLASS A.
4. REFER TO MECHANICAL AND ELECTRICAL DRAWINGS FOR ROOF PENETRATION LOCATIONS NOT OTHERWISE INDICATED, TYPICAL.
5. MECHANICAL UNIT MOUNTING CURBS PER 3/A-9.6 S.M.D.
6. MECHANICAL OR PLUMBING VENT FLASHING BOOTS, SEE 11/A-9.6 METAL, OR 7/A-9.6 B.U.R.
7. CONDUIT ROOF PENETRATION FLASHING 12/A-9.6
8. MECHANICAL DUCT THRU WALL FLASHING 4/A-9.6 8/A-9.6

ROOF PLAN LEGEND

- +0'-0" — DIMENSION INDICATING TOP OF ROOF LEVEL. SEE DETAILS FOR TOP OF ROOF LOCATION WITHIN ASSEMBLY
- BUILT UP ROOF SYSTEM 1/A-9.6
- CRICKET FRAMING, 1/2" PER FOOT MIN SLOPE
- STANDING SEAM METAL ROOF 1/A-9.4
- WALLS AND STRUCTURE BELOW
- 3'-0" WIDE WALK PADS

KEYPLAN

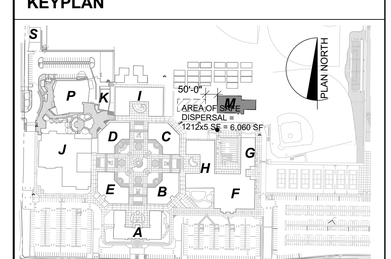

QUATTROCCHI KWOK ARCHITECTS

Main:
636 Fifth Street, Santa Rosa, CA 95404
East Bay:
55 Harrison Street, Suite 525,
Oakland, CA 94607
(707) 576-0829

LICENSED ARCHITECT
JIM THEISS
LICENSE # C22643
EXP JUNE 30, 2021
STATE OF CALIFORNIA

SIGNED: MAY 5, 2021

FREEDOM HIGH SCHOOL

NEW AUXILIARY GYMNASIUM

1050 NEROLY RD,
OAKLEY, CA 94561

LIBERTY UNION HIGH SCHOOL DISTRICT

DSA APP NO. 01-119278

ARCH PROJECT NO:	1869.00
DRAWN BY:	GRD
DRAWING SCALE:	1/8" = 1'-0"
PTN: 61721-78	FILE NO: 7-H4

BID DOCUMENT

APRIL 27, 2021

SHEET TITLE

ROOF PLAN

SHEET NUMBER

A-M4.1

BIMcloud: archiserver - BIMcloud Basic for ARCHICAD 22/1869.00 Freedom HS Aux. Gym_CD.4/27/2021;1:26 PM

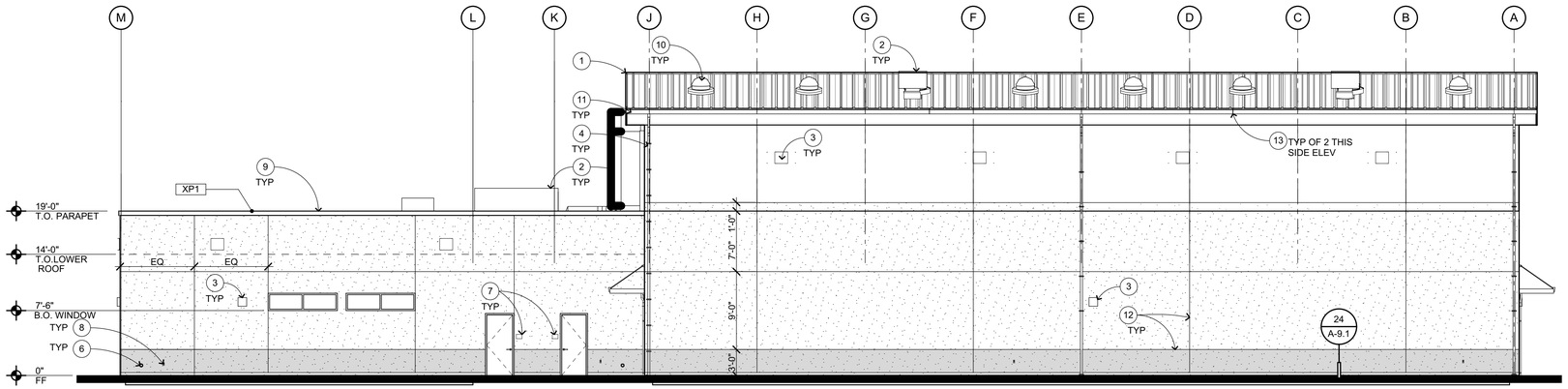

NORTH ELEVATION 1

1/8" = 1'-0"

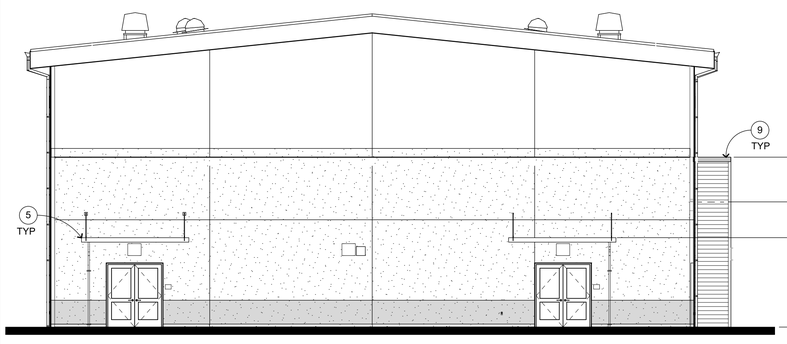

WEST ELEVATION 3

1/8" = 1'-0"

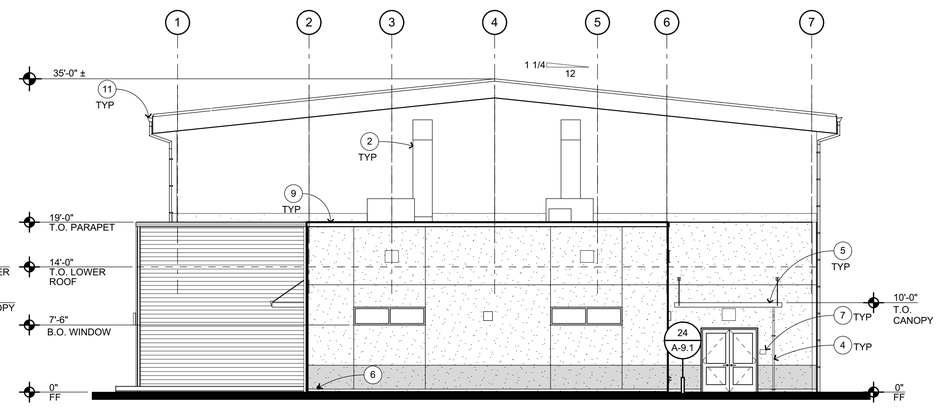

EAST ELEVATION 2

1/8" = 1'-0"

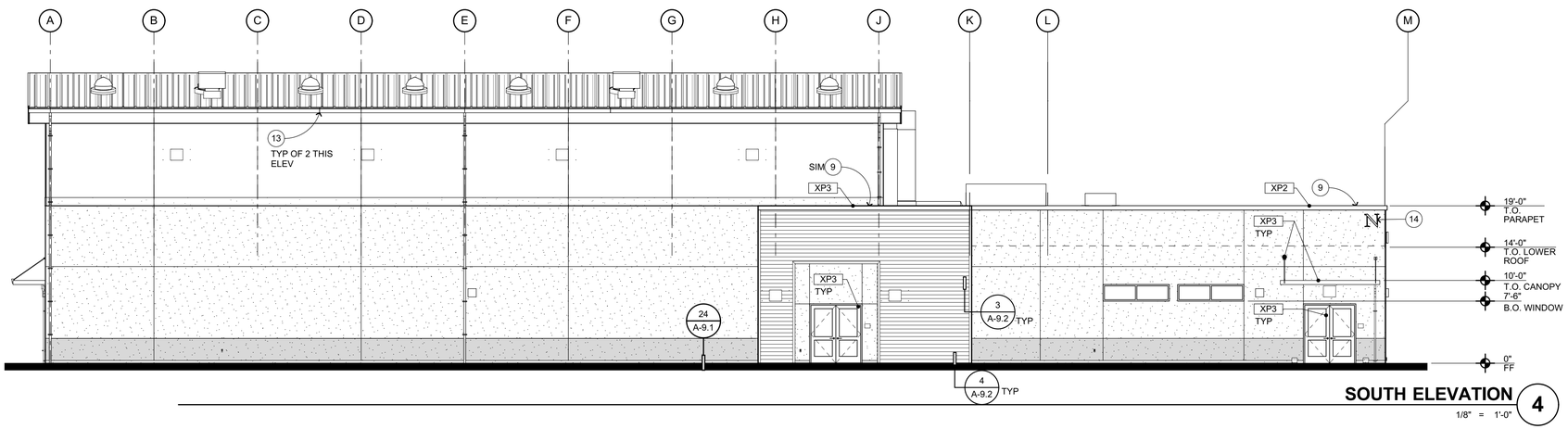

SOUTH ELEVATION 4

1/8" = 1'-0"

EXTERIOR ELEVATION KEYNOTES

1. STANDING SEAM MTL ROOF ASSEMBLY
2. MECHANICAL ITEM, S.M.D.
3. LIGHT FIXTURE, S.E.D.
4. RAIN WATER LEADER, SEE DETAILS 1/A-9.5 6/A-9.5
5. RAIN CANOPY, SEE DETAIL 8/A-9.7
6. OVERFLOW LEADER NOZZLE, S.P.D. AND DETAIL 2/A-9.5
7. SIGNAGE, SEE ARCH GRAPHIC PLAN 1/AG-2.1
8. PLUMBING ITEM, S.P.D.
9. PARAPET WALL W/ METAL COPING 5/A-9.6
10. TUBULAR SKYLIGHT, FLASHING TO BE ETCHED, PRIMED AND PAINTED TO MATCH THE ROOF
11. GUTTER
12. CONTROL JOINTS
13. GUTTER SEISMIC JOINT
14. BUILDING ID SIGN "N" TO MATCH (E) CAMPUS

EXTERIOR ELEVATION GENERAL NOTES

1. NOTES AND SYMBOLS ARE TO APPLY AT ALL AREAS OF SIMILAR GRAPHIC REPRESENTATION. SUCH INDICATIONS MAY BE LIMITED TO PROMOTE CLARITY OR AVOID REDUNDANCY. NO LIMITATION OF APPLICATION SHALL BE CONSTRUED WITHOUT SPECIFIC NOTATION.
2. ALL PENETRATIONS THROUGH EXTERIOR ROOF AND WALLS, AND FLOORS SHALL BE FLASHED AND SEALED WEATHER TIGHT. ALL PENETRATIONS THROUGH THE BUILDING INSULATION ENVELOPE SHALL BE PACKED WITH INSULATION.
3. PROVIDE OPENING FLASHINGS AT ALL WINDOWS, DOORS, LOUVERS AND SIMILAR WALL OPENINGS PER 18/A-9.3
4. PROVIDE CEMENT PLASTER CONTROL JOINTS AS INDICATED AND AS FOLLOWS: PROVIDE CONTROL JOINTS SO THAT THE MAXIMUM DISTANCE BETWEEN JOINTS, VERTICALLY OR HORIZONTALLY DOES NOT EXCEED 12'-0"; ALL CEMENT PLASTER "PANELS" SHALL BE DEFINED BY FOUR STRAIGHT AND UNINTERRUPTED EDGES; PROVIDE JOINTS AS REQUIRED TO AVOID INSIDE CORNERS IN ANY INDIVIDUAL PANEL.
5. REFER TO MECHANICAL DRAWINGS FOR REGISTERS AND VENTS NOT OTHERWISE SHOWN.
6. REFER TO ELECTRICAL DRAWINGS FOR HORNS, SPEAKERS, PULL STATIONS AND OTHER FEATURES NOT OTHERWISE SHOWN.
7. FOR PAINT FINISHES, SEE SEC. 099113 EXTERIOR PAINTING

EXTERIOR ELEVATION LEGEND

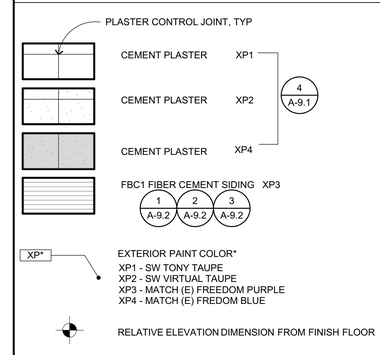

KEYPLAN

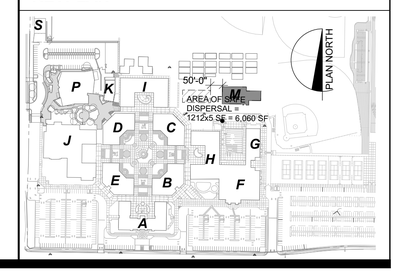

QUATTROCCHI KWOK ARCHITECTS

Main:
636 Fifth Street, Santa Rosa, CA 95404
East Bay:
55 Harrison Street, Suite 525,
Oakland, CA 94607
(707) 576-0829

LICENSED ARCHITECT
JIM THEISS
LICENSE # C22643
EXP JUNE 30, 2021
STATE OF CALIFORNIA

SIGNED: MAY 5, 2021

FREEDOM HIGH SCHOOL

NEW AUXILIARY GYMNASIUM

1050 NEROLY RD,
OAKLEY, CA 94561

LIBERTY UNION HIGH SCHOOL DISTRICT

DSA APP NO. 01-119278

ARCH PROJECT NO:	1869.00
DRAWN BY:	GRD
DRAWING SCALE:	1/8" = 1'-0"
PTN: 61721-78	FILE NO: 7-H4

BID DOCUMENT

APRIL 27, 2021

SHEET TITLE

EXTERIOR ELEVATIONS

SHEET NUMBER

A-M5.1

BIMcloud: archiserver - BIMcloud Basic for ARCHICAD 22/1869.00 Freedom HS Aux. Gym CD.4/27/2021,1:26 PM

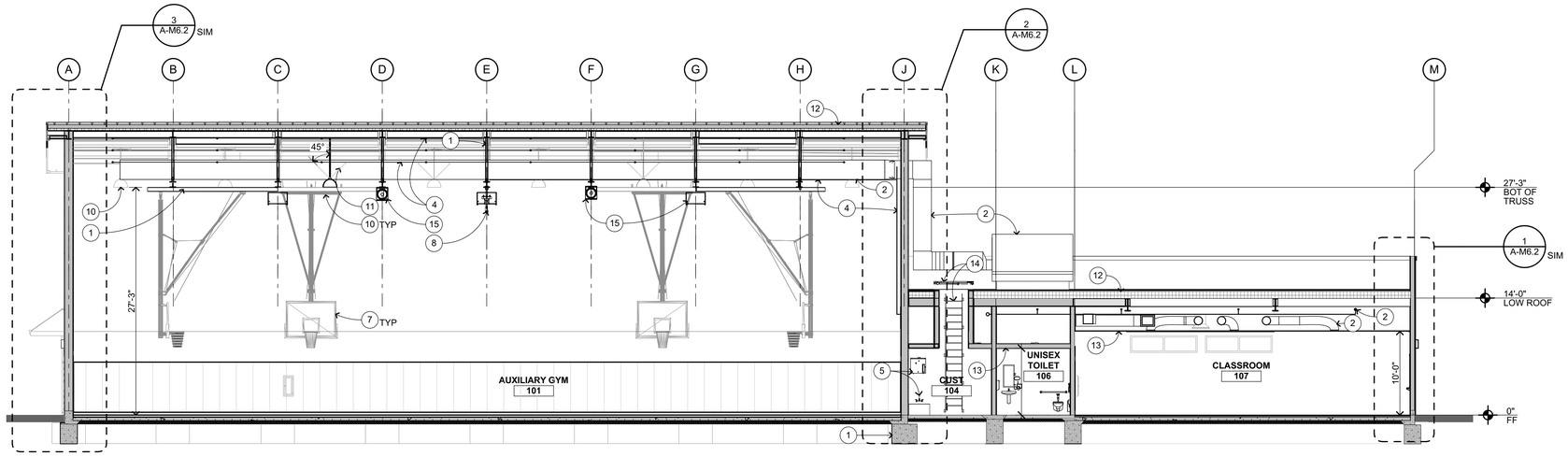

SECTION 1

1/8" = 1'-0"

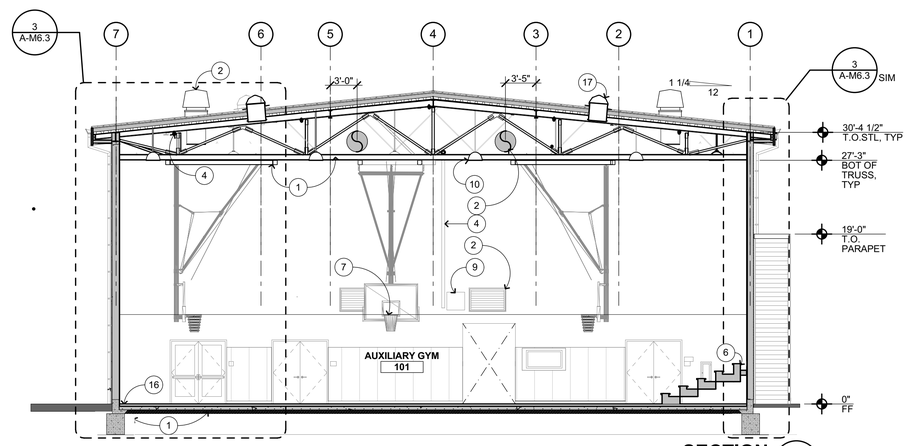

SECTION 2

1/8" = 1'-0"

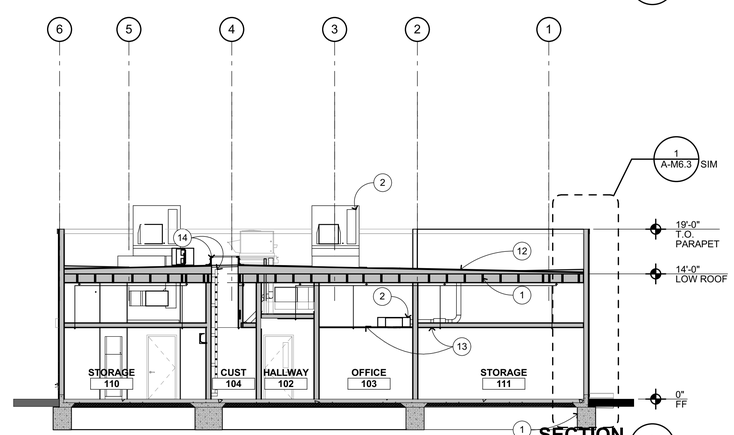

SECTION 3

1/8" = 1'-0"

SECTION KEYNOTES

NOT ALL KEYNOTES MAY APPLY TO THIS SHEET

1. STRUCTURAL FRAMING, S.S.D.
2. MECHANICAL ITEM, S.M.D.
3. ELECTRICAL ITEM, S.E.D.
4. FIRE PROTECTION ITEM, S.F.P.D.
5. PLUMBING ITEM, S.P.D.
6. MOTORIZED TELESCOPIC BLEACHERS
7. MOTORIZED RETRACTABLE BASKETBALL EQUIPMENT ABOVE, S.E.D.
8. MOTORIZED DIVIDER CURTAIN, S.S.D. FOR SUPPORT
9. ELECTRONIC SPORTS DEVICE
10. LIGHT FIXTURE, S.E.D.
11. BRACING WIRE, S.E.D.
12. ROOF ASSEMBLY, SEE ROOF PLAN
13. CEILING, SEE RCP
14. ROOF ACCESS LADDER AND HATCH
15. AUDIO VISUAL ITEM, S.AV.D.
16. DEPRESSED SLAB AT GYM
17. TUBULAR SKYLIGHTS

SECTION GENERAL NOTES

1. NOTES AND SYMBOLS ARE TO APPLY AT ALL AREAS OF SIMILAR GRAPHIC REPRESENTATION. SUCH INDICATIONS MAY BE LIMITED TO PROMOTE CLARITY OR AVOID REDUNDANCY. NO LIMITATION OF APPLICATION SHALL BE CONSTRUED WITHOUT SPECIFIC NOTATION.
2. ALL PENETRATIONS THROUGH EXTERIOR ROOF AND WALLS, AND FLOORS SHALL BE FLASHED AND SEALED WEATHER TIGHT. ALL PENETRATIONS THROUGH THE BUILDING INSULATION ENVELOPE SHALL BE PACKED WITH INSULATION.
3. PROVIDE OPENING FLASHINGS AT ALL WINDOWS, DOORS, LOUVERS AND SIMILAR WALL OPENINGS
4. PROVIDE FIRESTOPPING AT CONCEALED SPACES, INCLUDING BETWEEN STAIR STRINGERS & BETWEEN STUDS WITH STAIR RUN, FURRED SPACES, CEILING/FLOOR LEVELS AND 10'-0" INTERVALS ALONG LENGTHS OF WALL, SOFFITS, DROP CEILINGS, AND COVE CEILINGS PER CBC 718.
5. REFER TO INTERIOR ELEVATIONS FOR WALL FINISHES AND INFORMATION NOT SHOWN, TYPICAL.
6. REFER TO FLOOR PLAN FOR FLOOR FINISHES, TYPICAL.
7. REFER TO REFLECTED CEILING PLAN FOR CEILING FINISHES, TYPICAL.
8. REFER TO MECHANICAL DRAWINGS FOR REGISTERS AND VENTS NOT OTHERWISE SHOWN.
9. REFER TO ELECTRICAL DRAWINGS FOR HORNS, SPEAKERS, PULL STATIONS AND OTHER FEATURES NOT OTHERWISE SHOWN.

RELATIVE ELEVATION DIMENSION FROM FINISH FLOOR

KEYPLAN

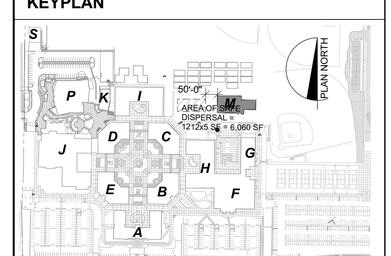

QUATTROCCHI KWOK
ARCHITECTS

Main:
636 Fifth Street, Santa Rosa, CA 95404
East Bay:
55 Harrison Street, Suite 525,
Oakland, CA 94607
(707) 576-0829

LICENSED ARCHITECT
JIM THEISS
LICENSE # C22643
EXP JUNE 30, 2021
STATE OF CALIFORNIA

SIGNED: MAY 5, 2021

FREEDOM HIGH SCHOOL

NEW AUXILIARY GYMNASIUM

1050 NEROLY RD,
OAKLEY, CA 94561

LIBERTY UNION
HIGH SCHOOL
DISTRICT

DSA APP NO.	01-119278
ARCH PROJECT NO:	1869.00
DRAWN BY:	GRD
DRAWING SCALE:	1/8" = 1'-0"
PTN: 61721-78	FILE NO: 7-H4

BID DOCUMENT

APRIL 27, 2021

SHEET TITLE

BUILDING SECTIONS

SHEET NUMBER

A-M6.1

BIMcloud: archiserver - BIMcloud Basic for ARCHICAD 22/1869.00 Freedom HS Aux. Gym. CD:4/27/2021;1:27 PM

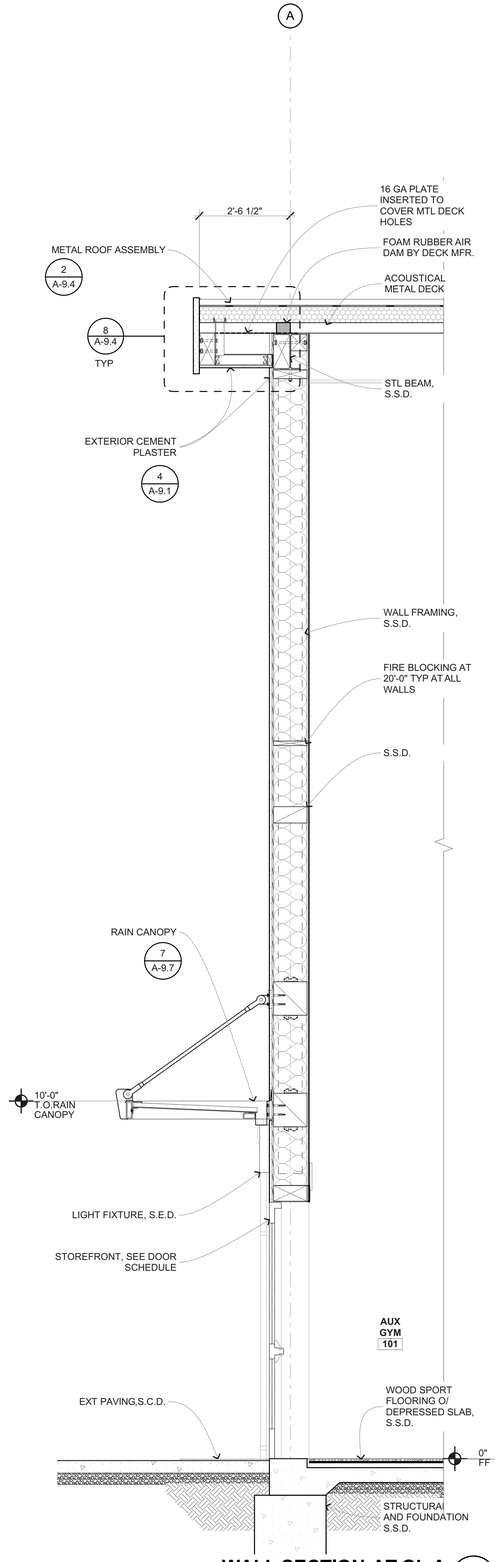

WALL SECTION AT GL A 3

1/2" = 1'-0"

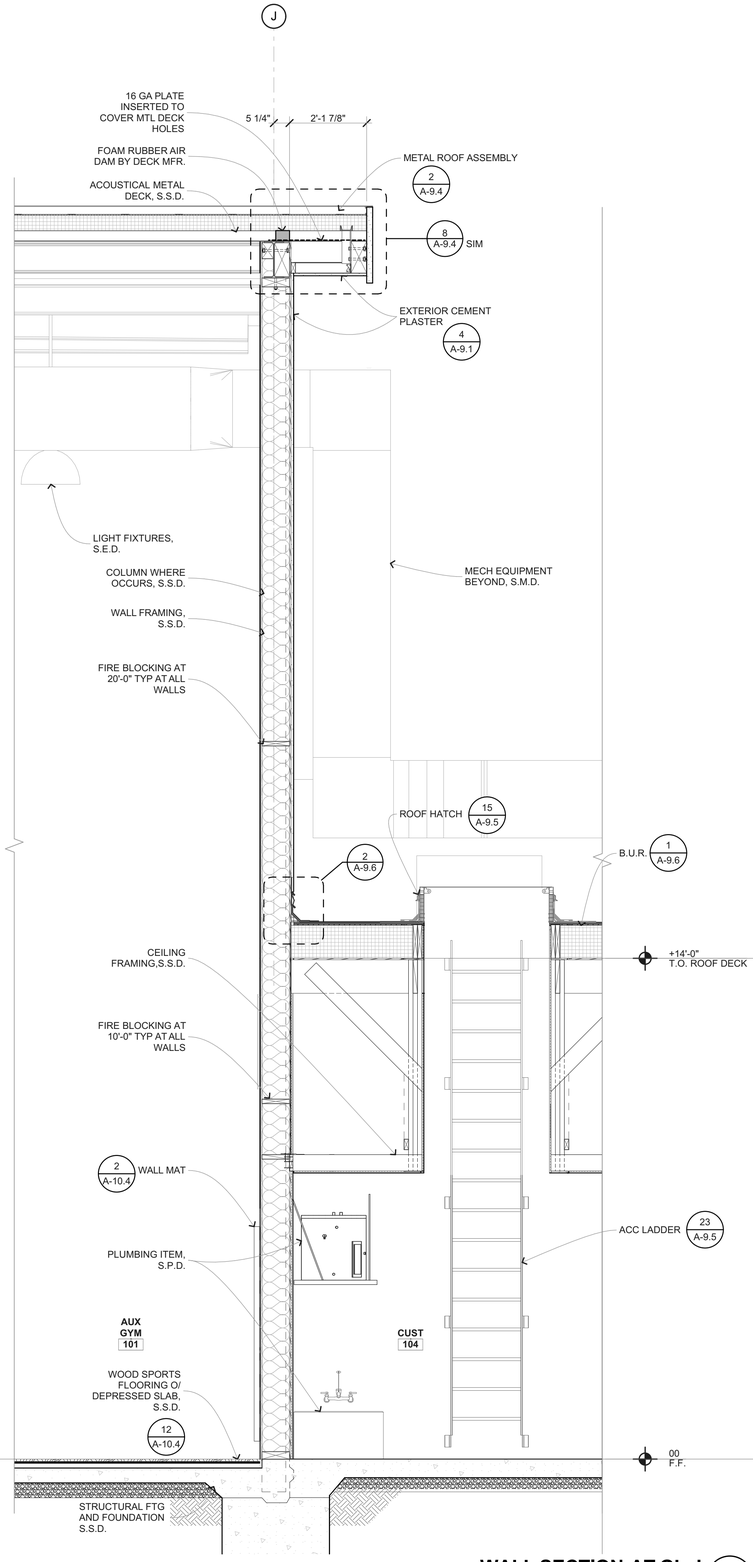

WALL SECTION AT GL J 2

1/2" = 1'-0"

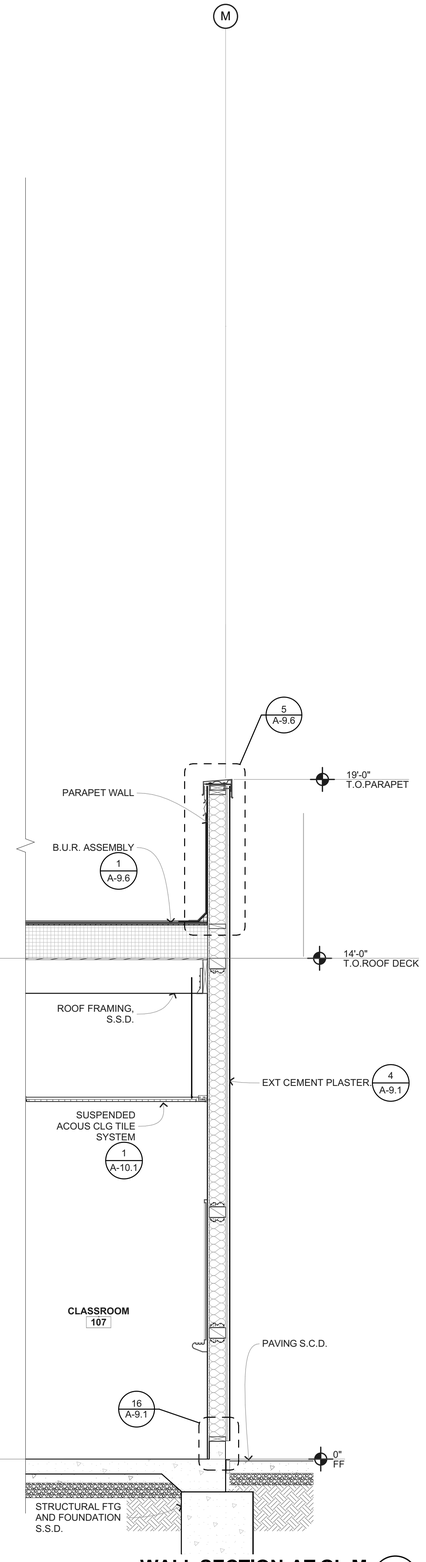

WALL SECTION AT GL M 1

1/2" = 1'-0"

QUATTROCCHI KWOK ARCHITECTS

Main:
636 Fifth Street, Santa Rosa, CA 95404
East Bay:
55 Harrison Street, Suite 525,
Oakland, CA 94607
(707) 576-0829

LICENSED ARCHITECT
JIM THEISS
LICENSE # C22643
EXP JUNE 30, 2021
STATE OF CALIFORNIA

SIGNED: MAY 5, 2021

FREEDOM HIGH SCHOOL

NEW AUXILIARY GYMNASIUM

1050 NEROLY RD,
OAKLEY, CA 94561

LIBERTY UNION HIGH SCHOOL DISTRICT

DSA APP NO. 01-119278

ARCH PROJECT NO: 1869.00

DRAWN BY:

DRAWING SCALE:

PTN: 61721-78 FILE NO: 7-H4

BID DOCUMENT

APRIL 27, 2021

SHEET TITLE

WALL SECTIONS

SHEET NUMBER

A-M6.2

BIMcloud: archiserver - BIMcloud Basic for ARCHICAD 22/1869.00 Freedom HS Aux. Gym_CD.4/27/2021 1:27 PM

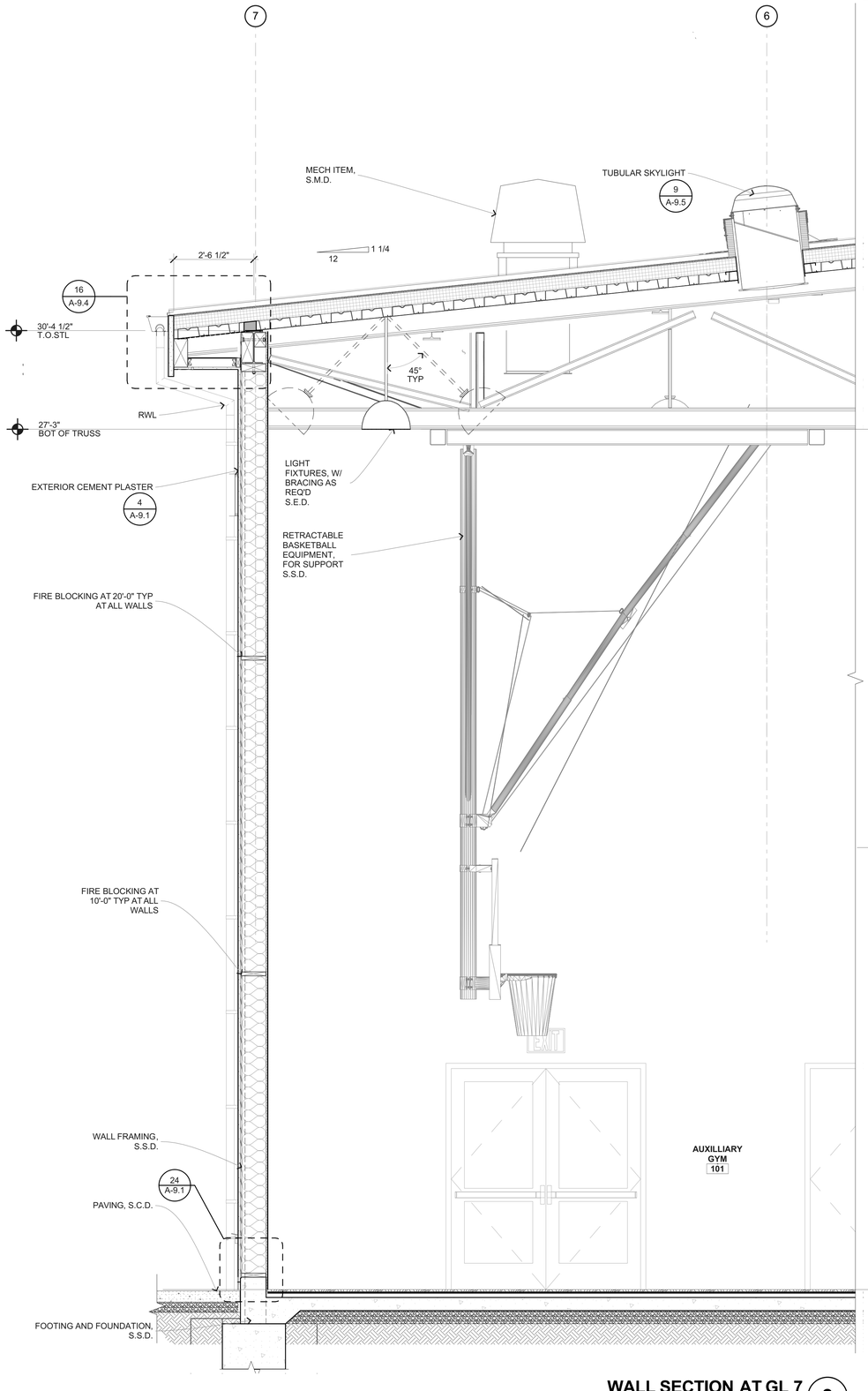

WALL SECTION AT GL 7 (3)

1/2" = 1'-0"

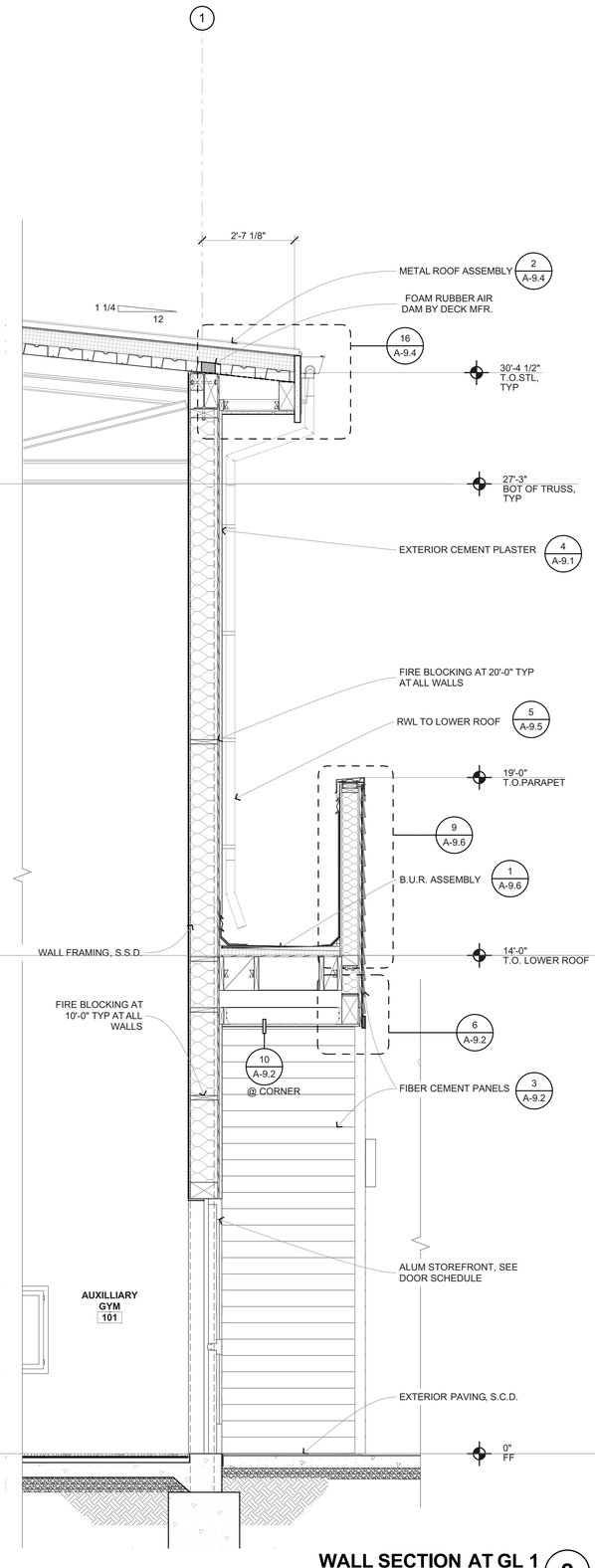

WALL SECTION AT GL 1 (2)

1/2" = 1'-0"

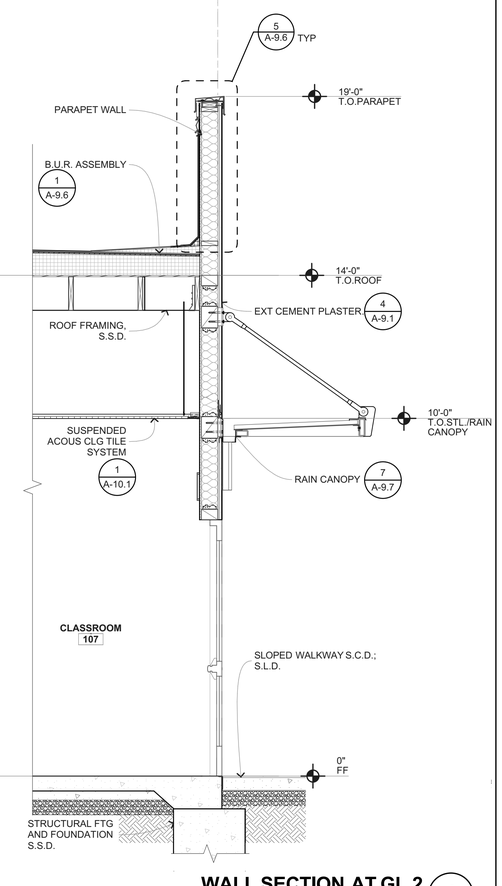

WALL SECTION AT GL 2 (1)

1/2" = 1'-0"

QUATTROCCHI KWOK ARCHITECTS

Main:
636 Fifth Street, Santa Rosa, CA 95404
East Bay:
55 Harrison Street, Suite 525,
Oakland, CA 94607
(707) 576-0829

LICENSED ARCHITECT
JIM THEISS
LICENSE # C22643
EXP JUNE 30, 2021
STATE OF CALIFORNIA

SIGNED: MAY 5, 2021

FREEDOM HIGH SCHOOL

NEW AUXILIARY GYMNASIUM

1050 NEROLY RD,
OAKLEY, CA 94561

LIBERTY UNION HIGH SCHOOL DISTRICT

DSA APP NO. 01-119278

ARCH PROJECT NO: 1869.00
DRAWN BY:
DRAWING SCALE:
PTN: 61721-78 FILE NO: 7-H4

BID DOCUMENT

APRIL 27, 2021

SHEET TITLE

WALL SECTIONS

SHEET NUMBER

A-M6.3

BIMcloud: archiserver - BIMcloud Basic for ARCHICAD 22/1869.00 Freedom HS Aux. Gym CD:4/27/2021:1:27 PM

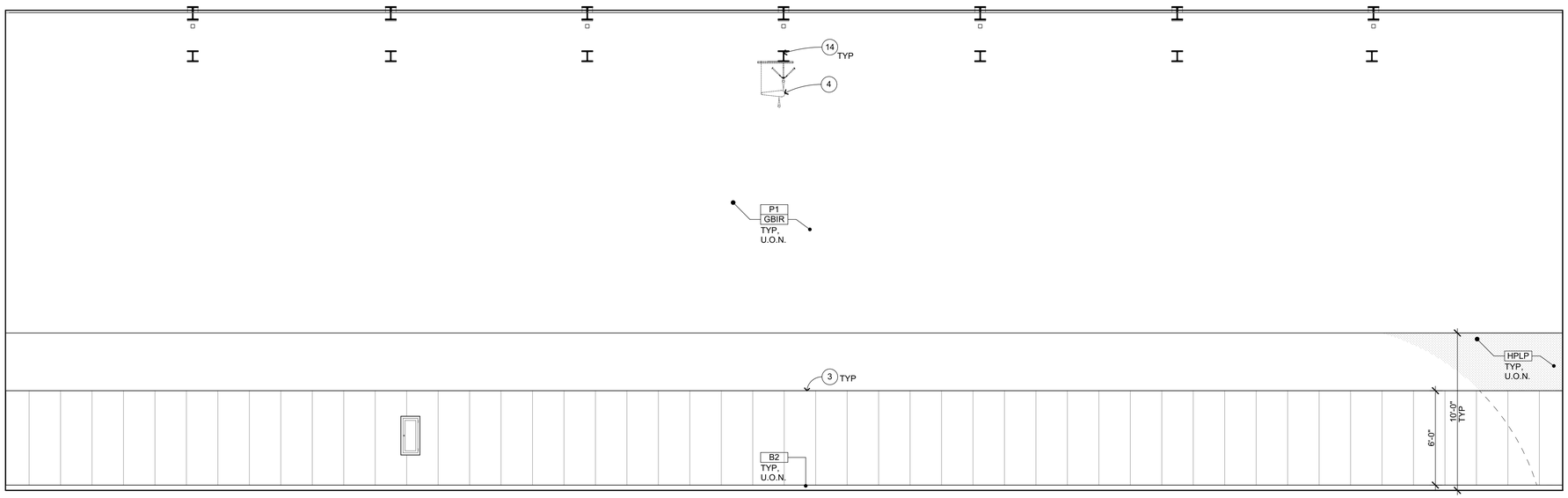

NORTH

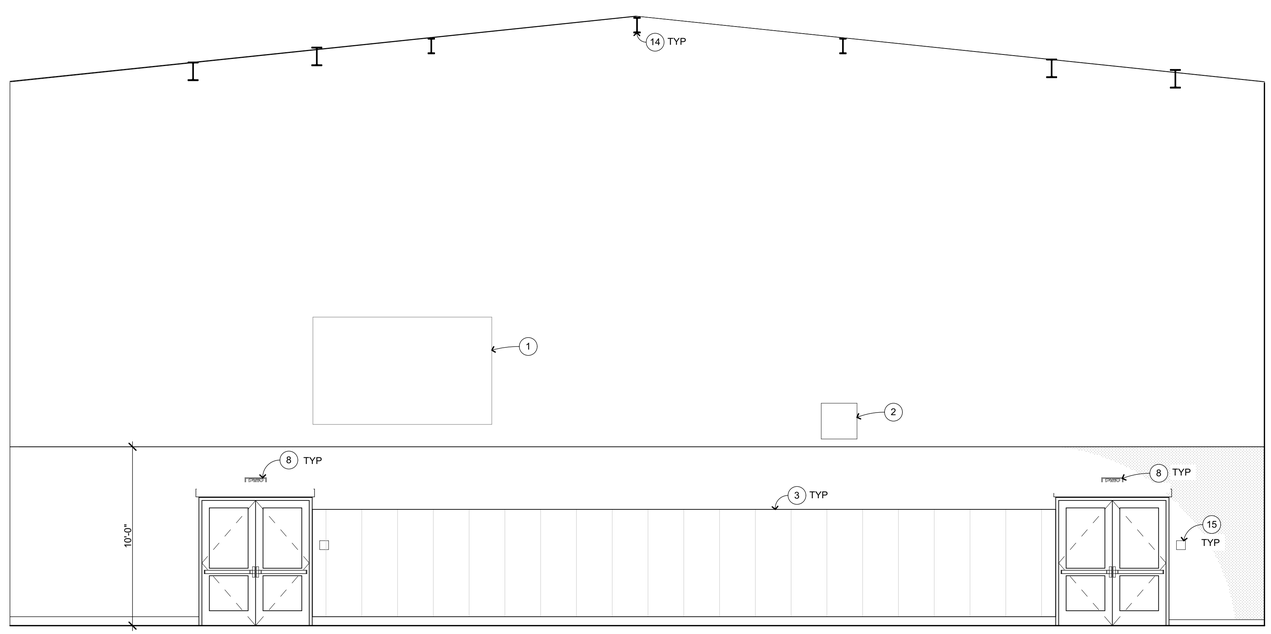

WEST

AUXILARY GYMNASIUM **101**

1/4" = 1'-0" A-M2.1

INTERIOR ELEVATION KEYNOTES

NOT ALL KEYNOTES MAY APPLY TO THIS SHEET

1. SCOREBOARD, PROVIDE BLKG PER (1/A-10.3)
2. SHOT CLOCK (1/A-10.4)
3. WALL PADS, SEE DETAIL (2/A-10.4)
4. MOTORIZED DIVIDER CURTAIN, S.S.D. FOR SUPPORT
5. MOTORIZED TELESCOPIC BLEACHERS
6. MECHANICAL ITEM, S.M.D.
7. SEMI-RECESSED FIRE CABINET AND EXTINGUISHER, SEE (9/A-10.3)
8. ELECTRICAL ITEM, S.E.D.
9. MARKER BOARD
10. PLUMBING ITEM, S.P.D.
11. SHORT THROW PROJECTOR, PROVIDE BLKG
12. AV RACK, SEE AV DRAWINGS
13. ROOF ACCESS LADDER
14. TRUSS/BEAM/JOIST (PAINTED), S.S.D.
15. SIGNAGE, SEE DETAIL (1/AG-2.1)
16. WING WALL

INTERIOR ELEVATION GENERAL NOTES

1. NOTES AND SYMBOLS ARE TO APPLY AT ALL AREAS OF SIMILAR GRAPHIC REPRESENTATION. SUCH INDICATIONS MAY BE LIMITED TO PROMOTE CLARITY OR AVOID REDUNDANCY. NO LIMITATION OF APPLICATION SHALL BE CONSTRUED WITHOUT SPECIFIC NOTATION.
2. REFER TO MECHANICAL DRAWINGS FOR REGISTERS AND VENTS NOT OTHERWISE SHOWN.
3. REFER TO ELECTRICAL DRAWINGS FOR HORNS, SPEAKERS, PULL STATIONS AND OTHER FEATURES NOT OTHERWISE SHOWN.
4. TYPICAL MOUNTING HEIGHTS OF ACCESSIBLE ELEMENTS AT ACCESSIBLE FIXTURES (4/A-10.3)
5. FLOORING & BASE SHALL EXTEND UNDER ACCESSIBLE SINK/LAVATORY BASE CABINETS TO THE WALL. HOT WATER AND DRAINPIPES ACCESSIBLE UNDER LAVATORIES SHALL BE INSULATED OR OTHERWISE COVERED. THERE SHALL BE NO SHARP OR ABRASIVE SURFACES UNDER LAVATORIES.
6. PROVIDE SOLID BLOCKING FOR CABINET, ACCESSORY, OR EQUIPMENT MOUNTING (1/A-10.3)

WALL AND BASE FINISH CODES

FOR PAINT FINISHES SEE SEC. 099123 INTERIOR PAINTING, ALL GYP BD TO BE TYPE 'X'

P1	PAINT 1	WP1	FRP PANEL O/ MOISTURE RESISTANT GYP BD
P2	PAINT 2	PLY1	3/4" MDO FIRE RATE PLYWOOD
AP1	ACOUSTICAL WALL PANELS (11/A-10.3)	HPLP	HIGH PRESSURE LAMINATED PANEL
GBMR	GYP BD - MOISTURE RESISTANT	CG1	CORNER GUARDS
GBIR	GYP BD - IMPACT RESISTANT		
WT1	WALL TILE - DALTILE 0100 WHITE	B1	4" RESILIENT BASE (COVED AT RESILIENT TILE FLOORING)
WT2	WALL TILE - DALTILE X114 DESSERT GRAY	B2	4" RESILIENT BASE - VENTED
WT3	WALL TILE - DALTILE RED OR BLUE (TBD)	EB1	EPOXY COVE BASE (13/A-10.3)

KEYPLAN

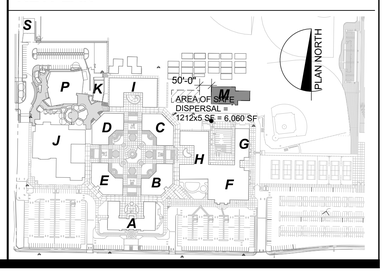

QUATTROCCHI KWOK ARCHITECTS

Main:
636 Fifth Street, Santa Rosa, CA 95404
East Bay:
55 Harrison Street, Suite 525,
Oakland, CA 94607
(707) 576-0829

LICENSED ARCHITECT
JIM THEISS
LICENSE # C22643
EXP JUNE 30, 2021
STATE OF CALIFORNIA

SIGNED: MAY 5, 2021

FREEDOM HIGH SCHOOL

NEW AUXILIARY GYMNASIUM

1050 NEROLY RD,
OAKLEY, CA 94561

LIBERTY UNION HIGH SCHOOL DISTRICT

DSA APP NO. 01-119278

ARCH PROJECT NO:	1869.00
DRAWN BY:	GRD
DRAWING SCALE:	1/4" = 1'-0"
PTN: 61721-78	FILE NO: 7-H4

BID DOCUMENT

APRIL 27, 2021

SHEET TITLE

INTERIOR ELEVATIONS

SHEET NUMBER

A-M7.1

BIMcloud: archiserver - BIMcloud Basic for ARCHICAD 22/1869.00 Freedom HS Aux. Gym. CD;4/27/2021;1:27 PM

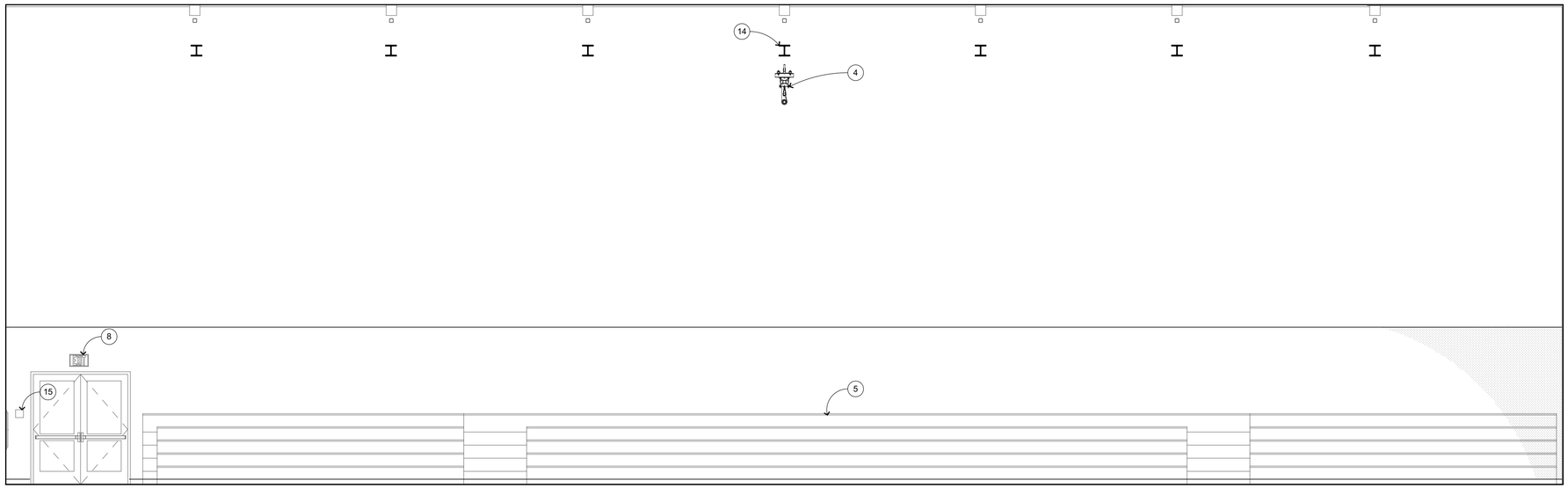

SOUTH

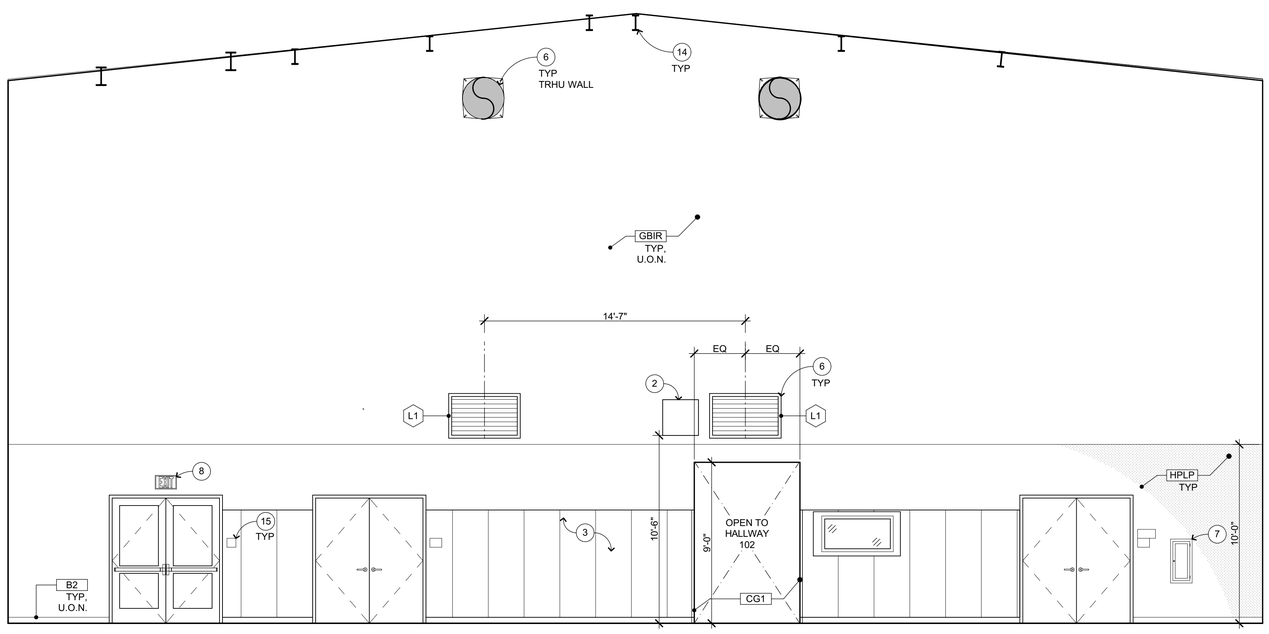

EAST

AUXILARY GYMNASIUM **101**

1/4" = 1'-0" A-M2.1

INTERIOR ELEVATION KEYNOTES

NOT ALL KEYNOTES MAY APPLY TO THIS SHEET

1. SCOREBOARD, PROVIDE BLKG PER (1/A-10.3)
2. SHOT CLOCK (1/A-10.4)
3. WALL PADS, SEE DETAIL (2/A-10.4)
4. MOTORIZED DIVIDER CURTAIN, S.S.D. FOR SUPPORT
5. MOTORIZED TELESCOPIC BLEACHERS
6. MECHANICAL ITEM, S.M.D.
7. SEMI-RECESSED FIRE CABINET AND EXTINGUISHER, SEE (9/A-10.3)
8. ELECTRICAL ITEM, S.E.D.
9. MARKER BOARD
10. PLUMBING ITEM, S.P.D.
11. SHORT THROW PROJECTOR, PROVIDE BLKG
12. AV RACK, SEE AV DRAWINGS
13. ROOF ACCESS LADDER
14. TRUSS/BEAM/JOIST (PAINTED), S.S.D.
15. SIGNAGE, SEE DETAIL (1/AG-2.1)
16. WING WALL

INTERIOR ELEVATION GENERAL NOTES

1. NOTES AND SYMBOLS ARE TO APPLY AT ALL AREAS OF SIMILAR GRAPHIC REPRESENTATION. SUCH INDICATIONS MAY BE LIMITED TO PROMOTE CLARITY OR AVOID REDUNDANCY. NO LIMITATION OF APPLICATION SHALL BE CONSTRUED WITHOUT SPECIFIC NOTATION.
2. REFER TO MECHANICAL DRAWINGS FOR REGISTERS AND VENTS NOT OTHERWISE SHOWN.
3. REFER TO ELECTRICAL DRAWINGS FOR HORNS, SPEAKERS, PULL STATIONS AND OTHER FEATURES NOT OTHERWISE SHOWN.
4. TYPICAL MOUNTING HEIGHTS OF ACCESSIBLE ELEMENTS AT ACCESSIBLE FIXTURES (4/A-10.3)
5. FLOORING & BASE SHALL EXTEND UNDER ACCESSIBLE SINK/LAVATORY BASE CABINETS TO THE WALL. HOT WATER AND DRAINPIPES ACCESSIBLE UNDER LAVATORIES SHALL BE INSULATED OR OTHERWISE COVERED. THERE SHALL BE NO SHARP OR ABRASIVE SURFACES UNDER LAVATORIES.
6. PROVIDE SOLID BLOCKING FOR CABINET, ACCESSORY, OR EQUIPMENT MOUNTING (1/A-10.3)

WALL AND BASE FINISH CODES

FOR PAINT FINISHES SEE SEC. 099123 INTERIOR PAINTING, ALL GYP BD TO BE TYPE 'X'

P1	PAINT 1
P2	PAINT 2
AP1	ACOUSTICAL WALL PANELS (11/A-10.3)
GBMR	GYP BD - MOISTURE RESISTANT
GBIR	GYP BD - IMPACT RESISTANT
WT1	WALL TILE - DALTILE 0100 WHITE
WT2	WALL TILE - DALTILE X114 DESSERT GRAY
WT3	WALL TILE - DALTILE RED OR BLUE (TBD)
WP1	FRP PANEL O/ MOISTURE RESISTANT GYP BD
PLY1	3/4" MDO FIRE RATE PLYWOOD
HPLP	HIGH PRESSURE LAMINATED PANEL
CG1	CORNER GUARDS
B1	4" RESILIENT BASE (COVED AT RESILIENT TILE FLOORING)
B2	4" RESILIENT BASE - VENTED
EB1	EPOXY COVE BASE (13/A-10.3)

KEYPLAN

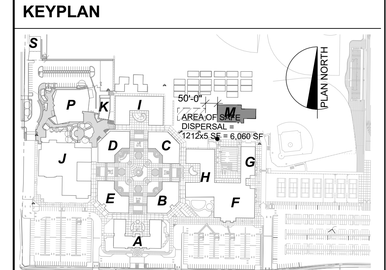

QUATTROCCHI KWOK
ARCHITECTS

Main:
636 Fifth Street, Santa Rosa, CA 95404
East Bay:
55 Harrison Street, Suite 525,
Oakland, CA 94607
(707) 576-0829

LICENSED ARCHITECT
JIM THEISS
LICENSE # C22643
EXP JUNE 30, 2021
STATE OF CALIFORNIA

SIGNED: MAY 5, 2021

FREEDOM HIGH SCHOOL

NEW AUXILIARY GYMNASIUM

1050 NEROLY RD,
OAKLEY, CA 94561

LIBERTY UNION
HIGH SCHOOL
DISTRICT

DSA APP NO. 01-119278

ARCH PROJECT NO:	1869.00
DRAWN BY:	GRD
DRAWING SCALE:	1/4" = 1'-0"
PTN: 61721-78	FILE NO: 7-H4

BID DOCUMENT

APRIL 27, 2021

SHEET TITLE

INTERIOR ELEVATIONS

SHEET NUMBER

A-M7.2

BIMcloud: archiserver - BIMcloud Basic for ARCHICAD 22/1869.00 Freedom HS Aux. Gym CD:4/27/2021 1:27 PM

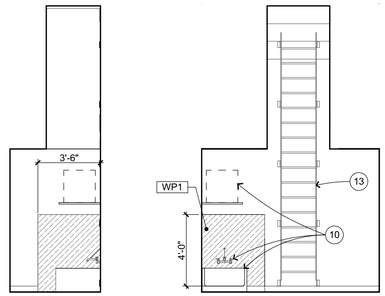

WEST NORTH

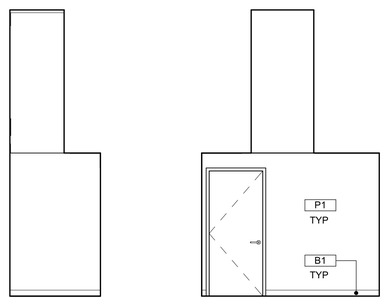

EAST SOUTH

CUST **104**

1/4" = 1'-0" A-M2.1

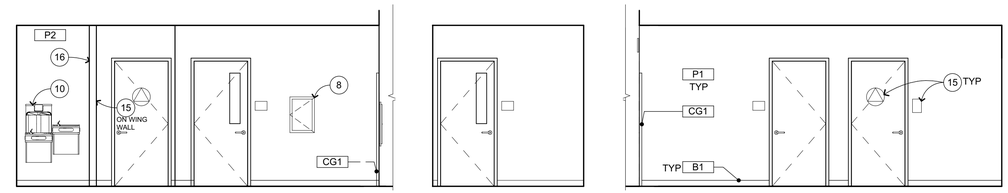

SOUTH EAST NORTH

HALLWAY **102**

1/4" = 1'-0" A-M2.1

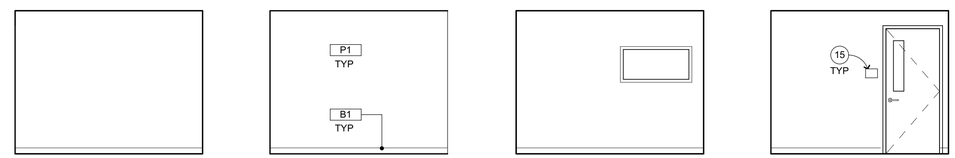

EAST SOUTH WEST NORTH

OFFICE **103**

1/4" = 1'-0" A-M2.1

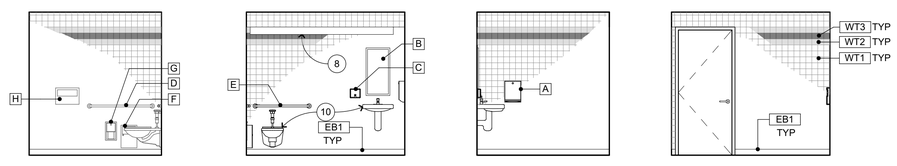

EAST SOUTH WEST NORTH

UNISEX TOILET **105**

1/4" = 1'-0" A-M2.1

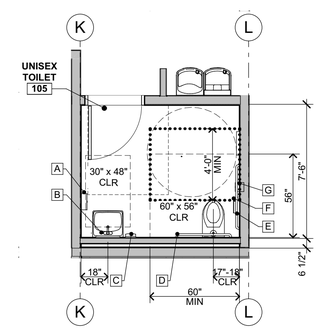

ENLARGED TOILET PLAN 1

1/4" = 1'-0"

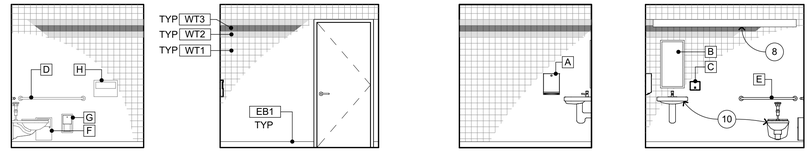

EAST SOUTH WEST NORTH

UNISEX TOILET **106**

1/4" = 1'-0" A-M2.1

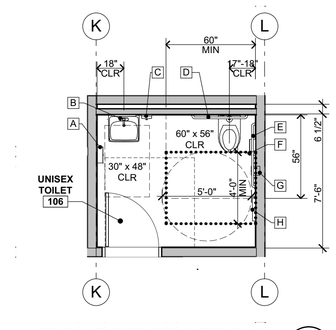

ENLARGED TOILET PLAN 2

1/4" = 1'-0"

0 2' 4' 8'

INTERIOR ELEVATION KEYNOTES

NOT ALL KEYNOTES MAY APPLY TO THIS SHEET

1. SCOREBOARD, PROVIDE BLKG PER (1/A-10.3)
2. SHOT CLOCK (1/A-10.4)
3. WALL PADS, SEE DETAIL (2/A-10.4)
4. MOTORIZED DIVIDER CURTAIN, S.S.D. FOR SUPPORT
5. MOTORIZED TELESCOPIC BLEACHERS
6. MECHANICAL ITEM, S.M.D.
7. SEMI-RECESSED FIRE CABINET AND EXTINGUISHER, SEE (9/A-10.3)
8. ELECTRICAL ITEM, S.E.D.
9. MARKER BOARD
10. PLUMBING ITEM, S.P.D.
11. SHORT THROW PROJECTOR, PROVIDE BLKG
12. AV RACK, SEE AV DRAWINGS
13. ROOF ACCESS LADDER
14. TRUSS/BEAM/JOIST (PAINTED), S.S.D.
15. SIGNAGE, SEE DETAIL (1/AG-2.1)
16. WING WALL

INTERIOR ELEVATION GENERAL NOTES

1. NOTES AND SYMBOLS ARE TO APPLY AT ALL AREAS OF SIMILAR GRAPHIC REPRESENTATION. SUCH INDICATIONS MAY BE LIMITED TO PROMOTE CLARITY OR AVOID REDUNDANCY. NO LIMITATION OF APPLICATION SHALL BE CONSTRUED WITHOUT SPECIFIC NOTATION.
2. REFER TO MECHANICAL DRAWINGS FOR REGISTERS AND VENTS NOT OTHERWISE SHOWN.
3. REFER TO ELECTRICAL DRAWINGS FOR HORNS, SPEAKERS, PULL STATIONS AND OTHER FEATURES NOT OTHERWISE SHOWN.
4. TYPICAL MOUNTING HEIGHTS OF ACCESSIBLE ELEMENTS AT ACCESSIBLE FIXTURES (4/A-10.3)
5. FLOORING & BASE SHALL EXTEND UNDER ACCESSIBLE SINK/LAVATORY BASE CABINETS TO THE WALL. HOT WATER AND DRAINPIPES ACCESSIBLE UNDER LAVATORIES SHALL BE INSULATED OR OTHERWISE COVERED. THERE SHALL BE NO SHARP OR ABRASIVE SURFACES UNDER LAVATORIES.
6. PROVIDE SOLID BLOCKING FOR CABINET, ACCESSORY, OR EQUIPMENT MOUNTING (1/A-10.3)

WALL AND BASE FINISH CODES

FOR PAINT FINISHES SEE SEC. 099123 INTERIOR PAINTING, ALL GYP BD TO BE TYPE 'X'

P1	PAINT 1	WP1	FRP PANEL O/ MOISTURE RESISTANT GYP BD
P2	PAINT 2	PLY1	3/4" MDO FIRE RATE PLYWOOD
AP1	ACOUSTICAL WALL PANELS (11/A-10.3)	HPLP	HIGH PRESSURE LAMINATED PANEL
GBMR	GYP BD - MOISTURE RESISTANT	CG1	CORNER GUARDS
GBIR	GYP BD - IMPACT RESISTANT	B1	4" RESILIENT BASE (COVED AT RESILIENT TILE FLOORING)
WT1	WALL TILE - DALTILE 0100 WHITE	B2	4" RESILIENT BASE - VENTED
WT2	WALL TILE - DALTILE X114 DESSERT GRAY	EB1	EPOXY COVE BASE (13/A-10.3)
WT3	WALL TILE - DALTILE RED OR BLUE (TBD)		

TOILET ROOM ACCESSORY SCHEDULE

A	PAPER TOWEL DISPENSER, SURFACE MOUNTED
B	MIRROR W/ SHELF (TYP), FOR ATTACHMENT SEE (2/A-10.3)
C	SOAP DISPENSER, SURFACE MOUNTED
D	36" GRAB BAR, FOR ATTACHMENT SEE (5/A-10.3) (6/A-10.3)
E	42" GRAB BAR, FOR ATTACHMENT SEE
F	SANITARY NAPKIN RECEPTACLE, SURFACE MOUNTED
G	TOILET PAPER DISPENSER, SURFACE MOUNTED
H	TOILET SEAT COVER DISPENSER, SURFACE MOUNTED
I	WASTE RECEPTACLE, N.I.C.

NOTE:
FOR TYPICAL ACCESSIBLE ACCESSORY MOUNTING HEIGHTS AND LOCATIONS, SEE (4/A-10.3)

KEYPLAN

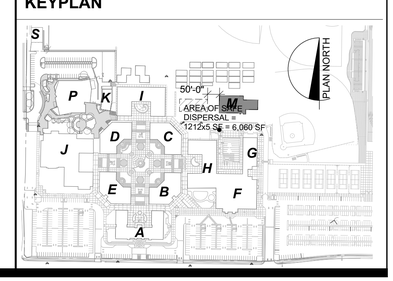

QUATTROCCHI KWOK ARCHITECTS

Main:
636 Fifth Street, Santa Rosa, CA 95404
East Bay:
55 Harrison Street, Suite 525,
Oakland, CA 94607
(707) 576-0829

LICENSED ARCHITECT
JIM THEISS
LICENSE # C22643
EXP JUNE 30, 2021
STATE OF CALIFORNIA

SIGNED: MAY 5, 2021

FREEDOM HIGH SCHOOL

NEW AUXILIARY GYMNASIUM

1050 NEROLY RD,
OAKLEY, CA 94561

LIBERTY UNION HIGH SCHOOL DISTRICT

DSA APP NO. 01-119278

ARCH PROJECT NO:	1869.00
DRAWN BY:	GRD
DRAWING SCALE:	1/4" = 1'-0"
PTN: 61721-78	FILE NO: 7-H4

BID DOCUMENT

APRIL 27, 2021

SHEET TITLE

INTERIOR ELEVATIONS

SHEET NUMBER

A-M7.3

BIMcloud: archiserver - BIMcloud Basic for ARCHICAD 22/1869.00 Freedom HS Aux. Gym CD.4/27/2021;1:27 PM

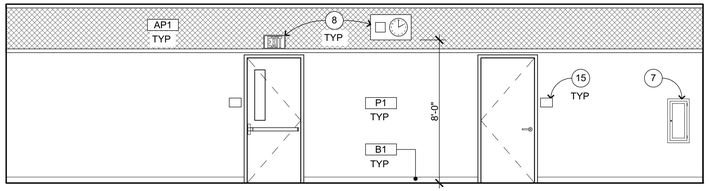

WEST

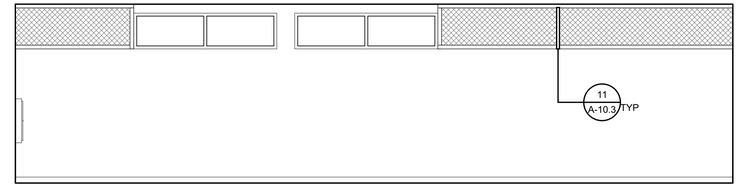

NORTH

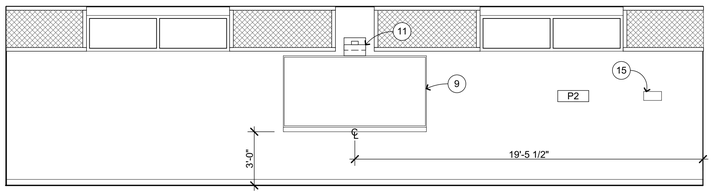

EAST

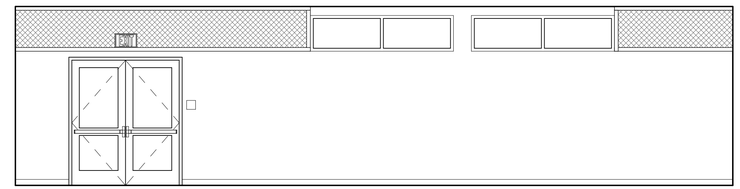

SOUTH

CLASSROOM **107**

1/4" = 1'-0" A-M2.1

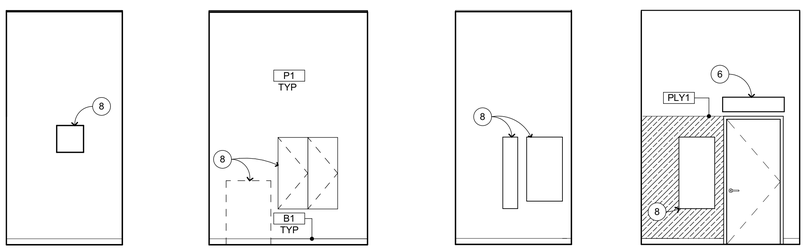

EAST SOUTH WEST NORTH

ELECTRICAL **109**

1/4" = 1'-0" A-M2.1

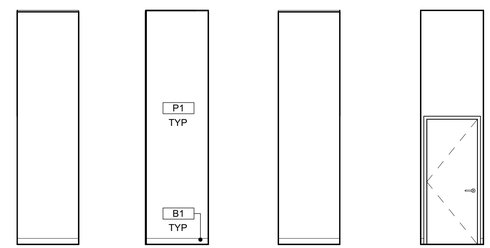

EAST SOUTH WEST NORTH

FIRE RISER **108**

1/4" = 1'-0" A-M2.1

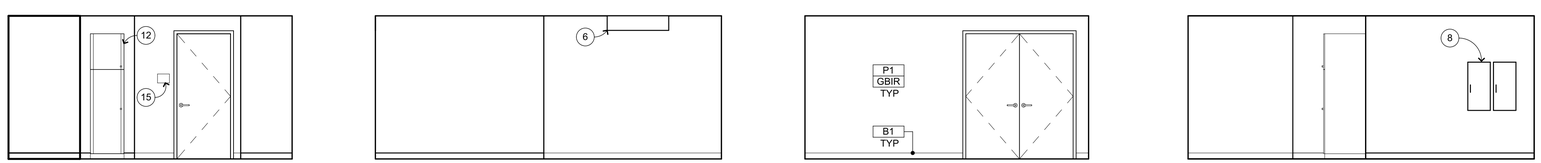

EAST SOUTH WEST NORTH

STORAGE **110**

1/4" = 1'-0" A-M2.1

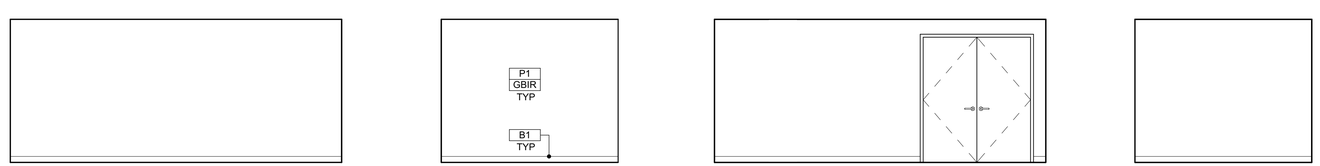

EAST SOUTH WEST NORTH

STORAGE **111**

1/4" = 1'-0" A-M2.1

INTERIOR ELEVATION KEYNOTES

NOT ALL KEYNOTES MAY APPLY TO THIS SHEET

1. SCOREBOARD, PROVIDE BLKG PER (1 / A-10.3)
2. SHOT CLOCK (1 / A-10.4)
3. WALL PADS, SEE DETAIL (2 / A-10.4)
4. MOTORIZED DIVIDER CURTAIN, S.S.D. FOR SUPPORT
5. MOTORIZED TELESCOPIC BLEACHERS
6. MECHANICAL ITEM, S.M.D.
7. SEMI-RECESSED FIRE CABINET AND EXTINGUISHER, SEE (9 / A-10.3)
8. ELECTRICAL ITEM, S.E.D.
9. MARKER BOARD
10. PLUMBING ITEM, S.P.D.
11. SHORT THROW PROJECTOR, PROVIDE BLKG
12. AV RACK, SEE AV DRAWINGS
13. ROOF ACCESS LADDER
14. TRUSS/BEAM/JOIST (PAINTED), S.S.D.
15. SIGNAGE, SEE DETAIL (1 / AG-2.1)
16. WING WALL

INTERIOR ELEVATION GENERAL NOTES

1. NOTES AND SYMBOLS ARE TO APPLY AT ALL AREAS OF SIMILAR GRAPHIC REPRESENTATION. SUCH INDICATIONS MAY BE LIMITED TO PROMOTE CLARITY OR AVOID REDUNDANCY. NO LIMITATION OF APPLICATION SHALL BE CONSTRUED WITHOUT SPECIFIC NOTATION.
2. REFER TO MECHANICAL DRAWINGS FOR REGISTERS AND VENTS NOT OTHERWISE SHOWN.
3. REFER TO ELECTRICAL DRAWINGS FOR HORNS, SPEAKERS, PULL STATIONS AND OTHER FEATURES NOT OTHERWISE SHOWN.
4. TYPICAL MOUNTING HEIGHTS OF ACCESSIBLE ELEMENTS AT ACCESSIBLE FIXTURES (4 / A-10.3)
5. FLOORING & BASE SHALL EXTEND UNDER ACCESSIBLE SINK/LAVATORY BASE CABINETS TO THE WALL. HOT WATER AND DRAINPIPES ACCESSIBLE UNDER LAVATORIES SHALL BE INSULATED OR OTHERWISE COVERED. THERE SHALL BE NO SHARP OR ABRASIVE SURFACES UNDER LAVATORIES.
6. PROVIDE SOLID BLOCKING FOR CABINET, ACCESSORY, OR EQUIPMENT MOUNTING (1 / A-10.3)

WALL AND BASE FINISH CODES

FOR PAINT FINISHES SEE SEC. 099123 INTERIOR PAINTING, ALL GYP BD TO BE TYPE 'X'

P1	PAINT 1
P2	PAINT 2
AP1	ACOUSTICAL WALL PANELS (11 / A-10.3)
GBMR	GYP BD - MOISTURE RESISTANT
GBIR	GYP BD - IMPACT RESISTANT
WT1	WALL TILE - DALTILE 0100 WHITE
WT2	WALL TILE - DALTILE X114 DESSERT GRAY
WT3	WALL TILE - DALTILE RED OR BLUE (TBD)
WP1	FRP PANEL O/ MOISTURE RESISTANT GYP BD
PLY1	3/4" MDO FIRE RATE PLYWOOD
HPLP	HIGH PRESSURE LAMINATED PANEL
CG1	CORNER GUARDS
B1	4" RESILIENT BASE (COVED AT RESILIENT TILE FLOORING)
B2	4" RESILIENT BASE - VENTED
EB1	EPOXY COVE BASE (13 / A-10.3)

KEYPLAN

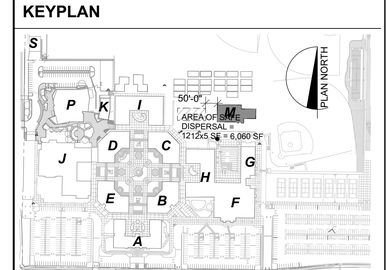

QUATTROCCHI KWOK ARCHITECTS

Main:
636 Fifth Street, Santa Rosa, CA 95404
East Bay:
55 Harrison Street, Suite 525,
Oakland, CA 94607
(707) 576-0829

LICENSED ARCHITECT
JIM THEISS
LICENSE # C22643
EXP JUNE 30, 2021
STATE OF CALIFORNIA

SIGNED: MAY 5, 2021

FREEDOM HIGH SCHOOL

NEW AUXILIARY GYMNASIUM

1050 NEROLY RD,
OAKLEY, CA 94561

LIBERTY UNION HIGH SCHOOL DISTRICT

DSA APP NO. 01-119278

ARCH PROJECT NO:	1869.00
DRAWN BY:	GRD
DRAWING SCALE:	1/4" = 1'-0"
PTN: 61721-78	FILE NO: 7-H4

BID DOCUMENT

APRIL 27, 2021

SHEET TITLE

INTERIOR ELEVATIONS

SHEET NUMBER

A-M7.4

BIMcloud: archiserver - BIMcloud Basic for ARCHICAD 22/1869.00 Freedom HS Aux. Gym_CD 4/27/2021 1:27 PM

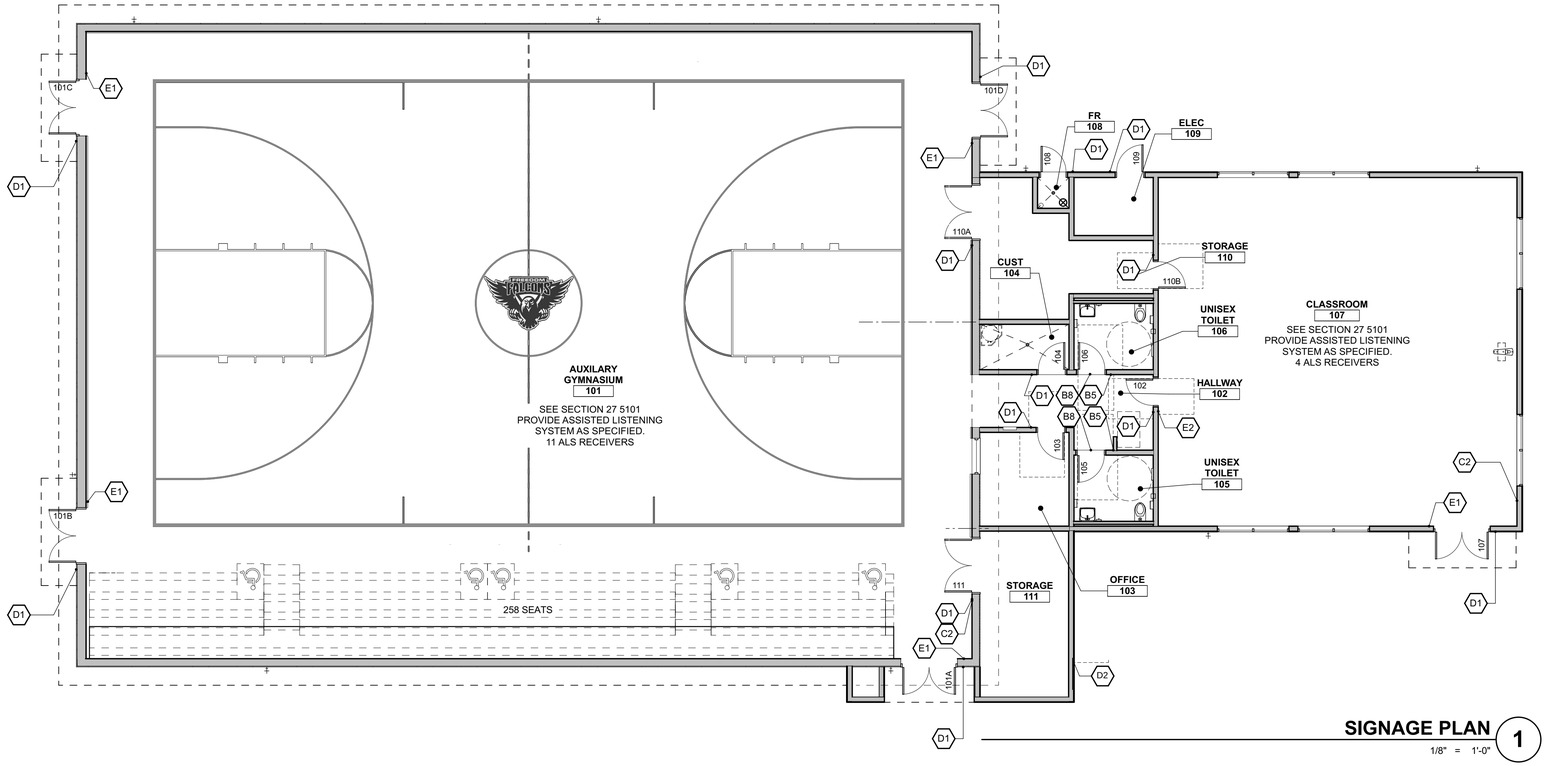

SIGNAGE PLAN 1

1/8" = 1'-0"

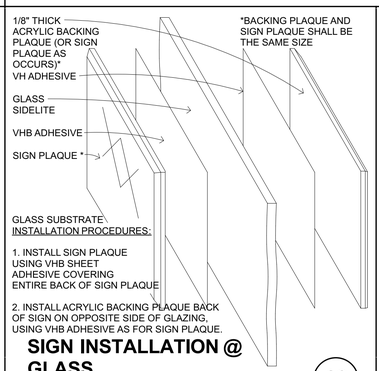

INSTALLATION PROCEDURES:

1. INSTALL SIGN PLAQUE USING VHB SHEET ADHESIVE COVERING ENTIRE BACK OF SIGN PLAQUE

2. INSTALL ACRYLIC BACKING PLAQUE BACK OF SIGN ON OPPOSITE SIDE OF GLAZING, USING VHB ADHESIVE AS FOR SIGN PLAQUE.

SIGN INSTALLATION @ GLASS 19

6" = 1'-0"

C103304

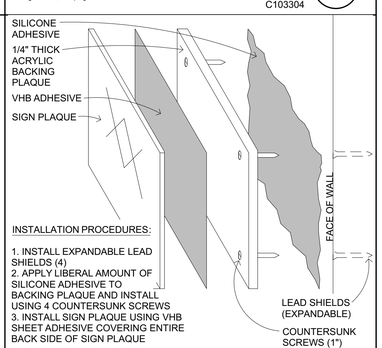

INSTALLATION PROCEDURES:

1. INSTALL EXPANDABLE LEAD SHIELDS (4)
2. APPLY LIBERAL AMOUNT OF SILICONE ADHESIVE TO BACKING PLAQUE AND INSTALL USING 4 COUNTERSUNK SCREWS
3. INSTALL SIGN PLAQUE USING VHB SHEET ADHESIVE COVERING ENTIRE BACK SIDE OF SIGN PLAQUE

SIGNAGE INSTALLATION 20

6" = 1'-0"

C103301

MINIMUM CBC REQUIREMENTS.

TYPICAL PLAQUE NOTES U.O.N.

PLAQUES WITH TACTILE LETTERING AND SYMBOLS (RAISED 1/32") INCLUDES CALIFORNIA CONTRACTED GRADE 2 BRAILLE RAISED 1/40" PER CBC REQUIREMENTS. SAN SERIF FONT SELECTION SHALL HAVE THE WIDTH OF THE UPPERCASE LETTER "O" IS 60% MIN AND 110% MAX OF THE HEIGHT OF THE UPPERCASE LETTER "I". A STROKE WIDTH TO HEIGHT OF THE UPPERCASE LETTER "I" SHALL BE 10% MAX OF HT OF CHARACTER.

CUSTOM COLORS, LAYOUT & LETTER STYLES TO BE SELECTED & APPROVED BY ARCHITECT, SIGNAGE SYMBOLS, BACKGROUND, MOUNTING SURFACE TO CONTRAST, 70% MINIMUM CONTRAST.

WHERE SIGN PLAQUES ARE PLACED ON GLASS, ANY BACKING PLAQUE OR SIGN IS TO BE THE SAME SIZE.

TEXT

TEXT SIZE*
5/8" MIN. TEXT (48 PT)
2" MAX.

TYP DIM TEXT & BRAILLE

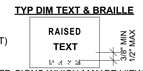

* FOR WALL MOUNTED SIGNS WHICH MAY BE VIEWED W/O OBSTRUCTION. BASED ON HT OF UPPERCASE LETTER "I")

MOUNTING OF SIGNS

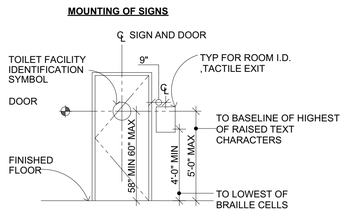

PERMANENT ROOM SIGNAGE TO BE PLACED AT STRIKE SIDE. WHERE INSUFFICIENT ROOM, PLACE ON ADJACENT WALL, PREFERABLY TO THE RIGHT OF THE DOOR.

A1 **ACCESSIBLE ENTRANCE SIGN**

VINYL 6"X6" BACKING WITH VINYL SYMBOL. BLUE BACKGROUND WITH WHITE SYMBOL. PROVIDE AT MAIN ENTRANCE AND AS NOTED.

STRIKE SIDE TOILET ROOM SIGNAGE
(PLAQUE NOTES TYP FOR EACH SIGN)

PROVIDE AT ACCESSIBLE TOILET ROOMS.

USE "GIRLS" & BOYS" WHERE TOILET ROOMS ARE PRIMARILY USED BY CHILDREN.

B1 **NOT USED**

B2 **NOT USED**

B3 **NOT USED**

B4 **NOT USED**

RESTROOM

B5 **GENDER NEUTRAL**

TOILET ROOM DOOR SIGNAGE
(NOTES TYP FOR EACH SIGN)
PROVIDE AT ACCESSIBLE TOILET ROOMS.

B6 **NOT USED**

B7 **NOT USED**

B8 **GENDER NEUTRAL**

UNISEX TOILET FACILITY IDENTIFICATION SYMBOLS

CIRCLE, 12 INCHES IN DIAMETER WITH AN EQUILATERAL TRIANGLE 1/4" THICK SUPERIMPOSED ON THE CIRCLE AND WITHIN THE 12 INCH DIAMETER VERTEX POINTING UPWARD. COLOR OF TRIANGLE SHALL CONTRAST WITH COLOR OF CIRCLE: COLOR OF CIRCLE SHALL CONTRAST WITH COLOR OF DOOR.70% MINIMUM CONTRAST.
•DOUBLE STICK FOAM TAPE ADHESIVE. SEE PLANS FOR LOCATIONS.
•PROVIDE AT ACCESSIBLE TOILET ROOM DOOR CENTERED AT 60" HIGH. SEE ACCOMPANYING DIAGRAM.

D1 E1 E2 SIGNAGE SIZES TO MATCH, MODIFY AS REQUIRED

8"
8"
MAXIMUM OCCUPANCY
105
PERSONS
5/8" MIN TEXT (48 PT.)

C1 **ROOM OCCUPANCY SIGNAGE**

INSTALLATION LOCATION PER PLANS AND CBC REQUIREMENTS.

PROVIDE AT ALL ROOMS W/ OCCUPANT LOADS GREATER THAN 50

MAX OCC OF ROOM BELOW:
GYM 101 : 1,126
CLASSROOM 107 : 79

8" OR AS REQ*
6"
ROOM NUMBER
ROOM NAME
5/8" MIN TEXT (48 PT.)
3/8" MIN 1/2" MAX

D1 **PERMANENT ROOM I.D. SIGNAGE**

INSTALL NEXT TO ENTRANCE DOORS, PER CBC REQUIREMENTS.

8"
6"
EXIT
5/8" MIN TEXT (48 PT.)

E1 **TACTILE EXIT SIGN AT ALL EXIT DOORS**

RAISED LETTERS "EXIT". BRAILLE "EXIT". CONTRACTED GRADE 2 BRAILLE

LOCATED AT ALL EXIT DOORS IN ADDITION TO OVERHEAD, ILLUMINATED EXIT SIGNS.

INSTALL ON THE WALL ADJACENT TO THE LATCH ON THE OUTSIDE OF THE DOOR WHERE THERE IS NO WALL SPACE ON THE WALL LATCH SIDE INCLUDING AT DOUBLE LEAF DOORS. SIGNS SHALL BE PLACED ON THE NEAREST ADJACENT WALL, PREFERABLY ON THE RIGHT SIDE.

8"
6"
EXIT ROUTE
5/8" MIN TEXT (48 PT.)

E2 **TACTILE EXIT ROUTE SIGN**

POST AS INDICATED AT DOORS TO EXIT ROUTE THAT DO NOT LEAD DIRECTLY TO THE EXTERIOR

*MIN DIMENSIONS SHOWN, WHERE BACK TO BACK SIGNS ARE APPLIED OVER GLASS, WIDTHS TO MATCH.

C2 **ASSISTIVE LISTENING SIGN**

1'-0"
6"
ASSISTIVE LISTENING SYSTEM AVAILABLE IN MAIN OFFICE
+60" A.F.F.
5/8" MIN TEXT (48 PT.)

D2 **PROJECT SPECIFIC DOOR SIGNS**

8"
6"
GAS SHUT OFF
5/8" MIN TEXT (48 PT.)
3/8" MIN 1/2" MAX

D2 **GAS REGULATOR SIGNAGE**

ACCESSIBLE SIGNAGE 4

1/4" = 1'-0"

QUATTROCCHI KWOK ARCHITECTS

Main:
636 Fifth Street, Santa Rosa, CA 95404
East Bay:
55 Harrison Street, Suite 525,
Oakland, CA 94607
(707) 576-0829

LICENSED ARCHITECT
JIM THEISS
LICENSE # C22643
EXP JUNE 30, 2021
STATE OF CALIFORNIA

SIGNED: MAY 5, 2021

FREEDOM HIGH SCHOOL

NEW AUXILIARY GYMNASIUM

1050 NEROLY RD,
OAKLEY, CA 94561

LIBERTY UNION HIGH SCHOOL DISTRICT

DSA APP NO. 01-119278

ARCH PROJECT NO: 1869.00

DRAWN BY:

DRAWING SCALE:

PTN: 61721-78 FILE NO: 7-H4

BID DOCUMENT

APRIL 27, 2021

SHEET TITLE

ARCH GRAPHIC PLAN AND DETAILS

SHEET NUMBER

AG-2.1

BIMcloud: archiserver - BIMcloud Basic for ARCHICAD 22/1869.00 Freedom HS Aux. Gym CD:4/27/2021;1:27 PM

WINDOW SCHEDULE

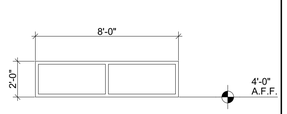

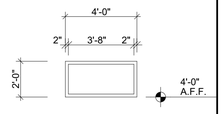

	W01	W02
TYPE	ALUMINUM STOREFRONT	HM
GLAZING	DUAL GLAZED	DUAL GLAZED
OPERATION	FIXED	FIXED
RATING	UNRATED	UNRATED
NOTES	EXTERIOR WINDOWS	INTERIOR WINDOWS

LOUVER SCHEDULE

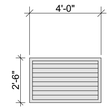

	L1
TYPE	HM
NOTES	SEE MECH DWG

DETAILS

TYPE	HEAD	JAMB	SILL
HOLLOW METAL	6 / A-9.3 SIM INT	6 / A-9.3 SIM INT	7 / A-9.3 TYP INT
ALUMINUM STOREFRONT	10A / A-9.3 SIM EXT	10B / A-9.3 SIM EXT	8 / A-9.3 TYP EXT
LOUVERS	11 / A-9.3	11 / A-9.3 SIM	11 / A-9.3

DOOR SCHEDULE

ID	TYPE	DOOR SIZE	DOOR MAT	DOOR FIN	FRAME TYPE	FRAME MAT	FRAME FIN	LOUVER SIZE	LABEL	HDWR	P. H.	REMARKS
101A	E	PR - 3'-0" x 7'-0"	ALUM	FAC FIN	2	ALUM	FAC FIN		-	1	PH	PROVIDE PEMKO 319 GASKET OR EQUAL AT HEAD AND JAMBS
101B	E	PR - 3'-0" x 7'-0"	ALUM	FAC FIN	2	ALUM	FAC FIN		-	1	PH	PROVIDE PEMKO 319 GASKET OR EQUAL AT HEAD AND JAMBS
101C	E	PR - 3'-0" x 7'-0"	ALUM	FAC FIN	2	ALUM	FAC FIN		-	1	PH	PROVIDE PEMKO 319 GASKET OR EQUAL AT HEAD AND JAMBS
101D	E	PR - 3'-0" x 7'-0"	ALUM	FAC FIN	2	ALUM	FAC FIN		-	1	PH	PROVIDE PEMKO 319 GASKET OR EQUAL AT HEAD AND JAMBS
102	C	3'-0" x 7'-0"	H.M.	PAINT	1	H.M.	PAINT		-	2	PH	
103	C	3'-0" x 7'-0"	H.M.	PAINT	1	H.M.	PAINT		-	3		
104	A	3'-0" x 7'-0"	H.M.	PAINT	1	H.M.	PAINT		-	4		
105	A	3'-0" x 7'-0"	H.M.	PAINT	1	H.M.	PAINT		-	5		
106	A	3'-0" x 7'-0"	H.M.	PAINT	1	H.M.	PAINT		-	5		
107	E	PR - 3'-0" x 7'-0"	ALUM	FAC FIN	2	ALUM	FAC FIN		-	1	PH	PROVIDE PEMKO 319 GASKET OR EQUAL AT HEADS AND JAMBS
108	A	2'-10" x 7'-0"	H.M.	PAINT	1	H.M.	PAINT		-	6		PROVIDE PEMKO 319 GASKET OR EQUAL AT HEADS AND JAMBS
109	A	3'-0" x 7'-0"	H.M.	PAINT	1	H.M.	PAINT		-	6		PROVIDE PEMKO 319 GASKET OR EQUAL AT HEADS AND JAMBS
110A	A	PR - 3'-0" x 7'-0"	H.M.	PAINT	2	H.M.	PAINT		-	7		
110B	A	3'-0" x 7'-0"	H.M.	PAINT	1	H.M.	PAINT			4		
111	A	PR - 3'-0" x 7'-0"	H.M.	PAINT	2	H.M.	PAINT		-	7		

DOOR PANEL TYPES

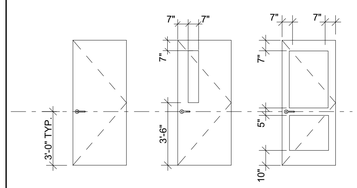

A
FLUSH

C
FLUSH W/ VISION LITE
3'-7" MAX FIN FLR TO VISION LITE, TYP

E
ALUMINUM ENTRANCE DIMENSIONS PER MANUF.

DOOR FRAME TYPES

ALL FRAMES ARE 2" WIDE U.O.N.

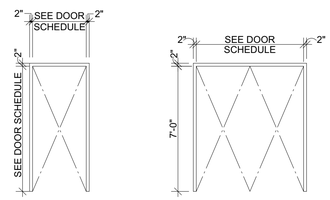

1

2

DETAILS

TYPE	HEAD	JAMB	SILL
HOLLOW METAL	1 / A-9.3 EXT 6 / A-9.3 INT	2 / A-9.3 EXT 6 / A-9.3 INT 5 / A-9.3 INT	3 / A-9.3 EXT 15 / A-10.3 INT
ALUMINUM STOREFROT	10A / A-9.3 SIM EXT	10B / A-9.3 SIM EXT	8 / A-9.3 TYP EXT

DOOR GENERAL NOTES

1. ALL EXIT DOORS IN SCHOOL BUILDINGS, INCLUDING BUT NOT LIMITED TO DOORS OF TOILET ROOMS AND STORAGE ROOMS SHALL CONFORM TO CBC 1010. EXIT DOORS SHALL BE OPERABLE FROM THE INSIDE WITHOUT THE USE OF A KEY, OR SPECIAL KNOWLEDGE OR EFFORT.
2. EXIT DEVICES (PANIC HARDWARE) SHALL BE INSTALLED IN CONFORMANCE WITH CBC 1010.1.10. PANIC HARDWARE IS REQUIRED FROM ROOMS AND CORRIDORS OF A OR E OCCUPANCY WHERE OCCUPANT LOAD EXCEEDS 50 PER CBC 1010.1.10
3. ALL DOORS AT E OCCUPANCY WITH AN OCCUPANT LOAD GREATER THAN 5 SHALL BE LOCKABLE FROM THE INSIDE.
4. DOORS WITH CLOSERS SHALL BE ADJUSTED TO PROVIDE MINIMUM DOOR CLOSER PERIOD OF FIVE SECONDS FROM A POSITION OF 90 DEGREES TO WITHIN 12 DEGREES OF THE DOOR LATCH, MEASURED FROM THE LEADING EDGE OF THE DOOR.
5. MAXIMUM EFFORT TO OPERATE DOORS SHALL NOT EXCEED 5 POUNDS APPLIED IN THE DIRECTION OF TRAVEL. REQUIRED FIRE DOORS SHALL HAVE A MAXIMUM OPERATING EFFORT NOT TO EXCEED 15 POUNDS. THESE FORCES DO NOT APPLY TO THE FORCE REQUIRED TO RETRACT LATCH BOLTS OR DISENGAGE OTHER DEVICES THAT HOLD THE DOOR OR GATE IN A CLOSED POSITION.
6. SEE ARCHITECTURAL SIGNAGE DRAWINGS FOR SIGNS ON DOORS AND SIGNS RELATED TO ENTRANCE AND EXIT. REFER TO SITE PLAN FOR SITE SIGNAGE.

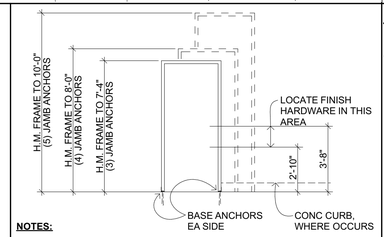

NOTES:

1. PROVIDE DOOR FRAME ANCHORAGE AS FOLLOWS: PROVIDE A MINIMUM OF (3) FRAME ANCHORS AT EA JAMB OF DOOR FRAMES AT 24" O.C. MAX WITHIN 18" OF TOP AND BOTTOM. JAMB ANCHORS TO BE SPACED EQUALLY.
2. ATTACH ANCHORS TO WOOD FRAMING WITH #8 F.H.W.S., 1 1/2" MINIMUM PENETRATION.
3. BASE ANCHORS ARE ADDITIONAL TO THE NUMBER OF JAMB ANCHORS INDICATED ON THIS DIAGRAM. SEE 8 / A-8.1

HM FRAME ANCHORAGE (2)

1/4" = 1'-0"

B203106

GLAZING GENERAL NOTES

1. ALL INTERIOR GLAZING SHALL BE 1/4" CLEAR TEMPERED, U.O.N.
2. ALL EXTERIOR GLAZING SHALL BE INSULATED GLASS UNITS W/ 1/4" TEMPERED GLASS, U.O.N.
3. PROVIDE RATED GLASS AT RATED ASSEMBLIES IN ACCORDANCE WITH CBC CHAPTERS 7 AND 24.
4. FOR DETAILED DOOR AND WINDOW GLAZING INFORMATION REFER TO SPECIFICATION SECTION 08 8000.

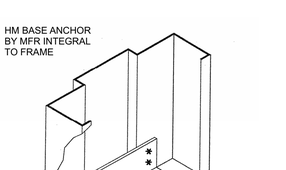

HM FRAME BASE ANCHOR (8)

3" = 1'-0"

B203106.1

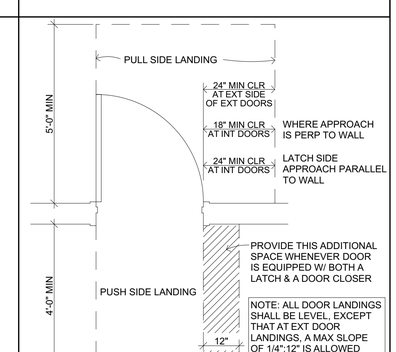

ACCESSIBLE DOOR LANDINGS (1)

1/2" = 1'-0"

B203301

QUATTROCCHI KWOK ARCHITECTS

Main:
636 Fifth Street, Santa Rosa, CA 95404
East Bay:
55 Harrison Street, Suite 525,
Oakland, CA 94607
(707) 576-0829

LICENSED ARCHITECT
JIM THEISS
LICENSE # C22643
EXP JUNE 30, 2021
STATE OF CALIFORNIA

SIGNED: MAY 5, 2021

FREEDOM HIGH SCHOOL

NEW AUXILIARY GYMNASIUM

1050 NEROLY RD,
OAKLEY, CA 94561

LIBERTY UNION HIGH SCHOOL DISTRICT

DSA APP NO. 01-119278

ARCH PROJECT NO:	1869.00
DRAWN BY:	GRD
DRAWING SCALE:	AS NOTED
PTN: 61721-78	FILE NO: 7-H4

BID DOCUMENT

APRIL 27, 2021

SHEET TITLE

DOOR AND WINDOW SCHEDULE AND DETAILS

SHEET NUMBER

A-8.1

BIMcloud: archiserver - BIMcloud Basic for ARCHICAD 22/1869.00 Freedom HS Aux. Gym CD:4/27/2021;1:27 PM

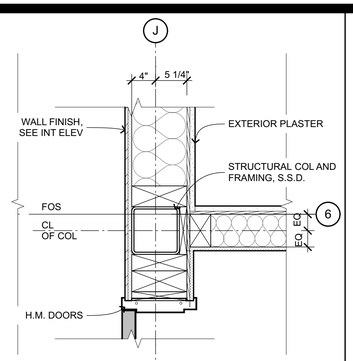

WALL INTERSECTION DETAIL 17

1" = 1'-0" 1869.02

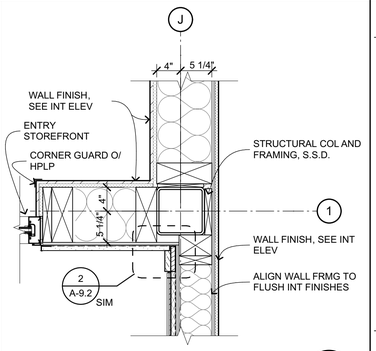

WALL INTERSECTION DETAIL 18

1" = 1'-0" 1869.01

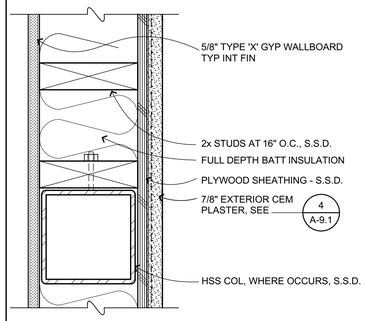

TYP EXT WALL 14

3" = 1'-0" B201100

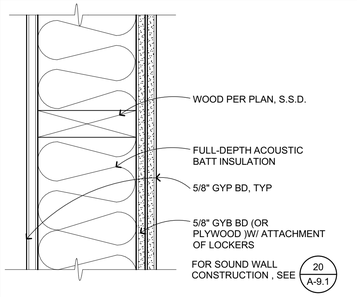

STC 50 SOUND WALL 19

3" = 1'-0" C101132

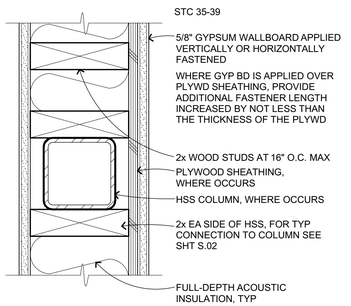

TYP INT WALL - NON-RATED 15

3" = 1'-0" C101105

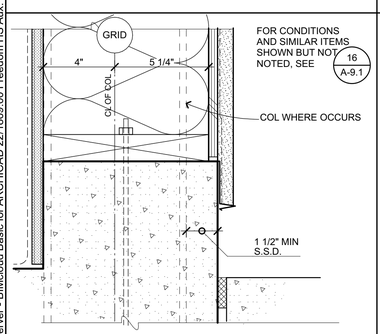

EXT CURB @ GL 1,7,J 24

3" = 1'-0" 1869.06

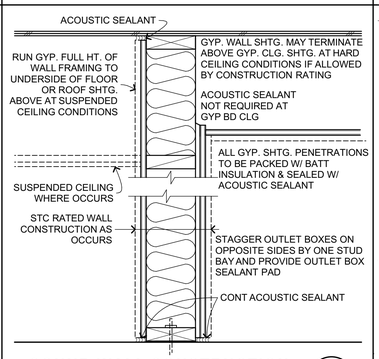

SOUND WALL CONSTRUCTION 20

1 1/2"= 1'-0" C101135

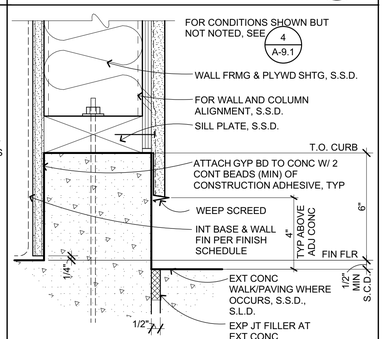

EXT CURB - CEM PLAS 16

3" = 1'-0" B201102

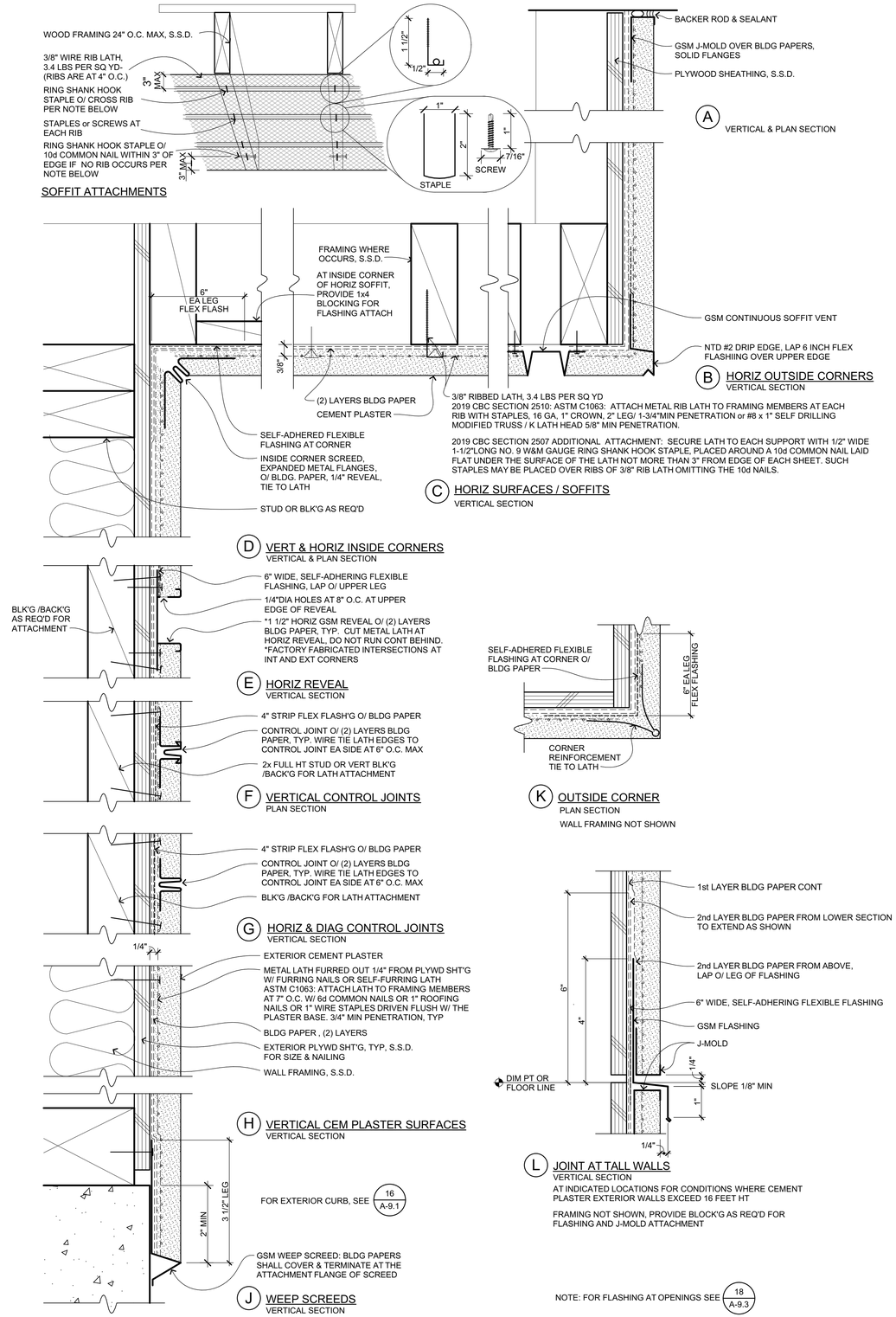

TYP CEM PLAS AT WD FRMG 4

6" = 1'-0" B201404

QUATTROCCHI KWOK ARCHITECTS

Main:
636 Fifth Street, Santa Rosa, CA 95404
East Bay:
55 Harrison Street, Suite 525,
Oakland, CA 94607
(707) 576-0829

LICENSED ARCHITECT
JIM THEISS
LICENSE # C22643
EXP JUNE 30, 2021
STATE OF CALIFORNIA

SIGNED: MAY 5, 2021

FREEDOM HIGH SCHOOL

NEW AUXILIARY GYMNASIUM

1050 NEROLY RD,
OAKLEY, CA 94561

LIBERTY UNION HIGH SCHOOL DISTRICT

DSA APP NO.	01-119278
ARCH PROJECT NO:	1869.00
DRAWN BY:	PAG
DRAWING SCALE:	AS NOTED
PTN: 61721-78	FILE NO: 7-H4

BID DOCUMENT

APRIL 27, 2021

SHEET TITLE

EXTERIOR DETAILS

SHEET NUMBER

A-9.1

BIMcloud: archiserver - BIMcloud Basic for ARCHICAD 22/1869.00 Freedom HS Aux. Gym CD.4/27/2021,1:27 PM

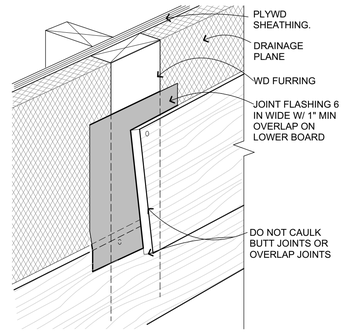

FIB CEM LAP SIDING JT

3" = 1'-0" B201315 **5**

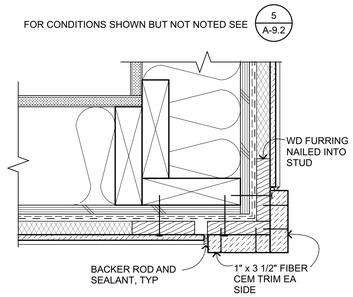

EXT CORNER-FIB CEM LAP SIDING

3" = 1'-0" B201303_B **1**

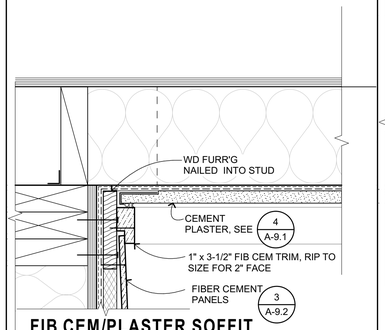

FIB CEM/PLASTER SOFFIT TRANSITION

3" = 1'-0" 1869.04 **10**

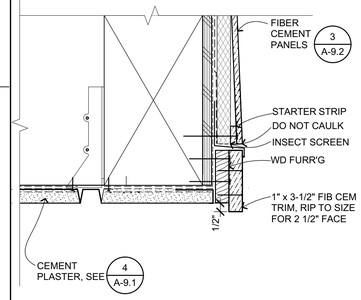

FIB CEM AT HEAD OPENING

3" = 1'-0" 1869.03 **6**

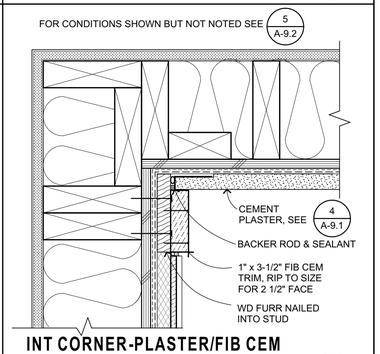

INT CORNER-PLASTER/FIB CEM LAP SIDING

3" = 1'-0" B201301_B **2**

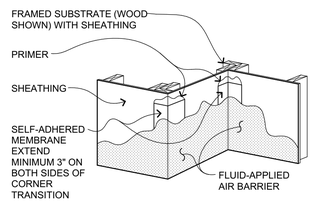

1 AIR BARRIER - INSIDE AND OUTSIDE CORNERS

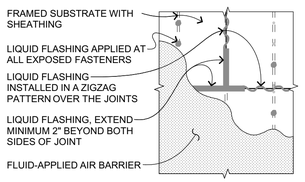

3 AIR BARRIER - SHEATHING JOINT TREATMENT

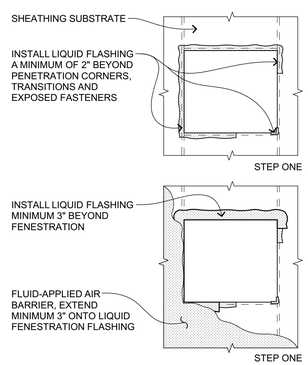

2 AIR BARRIER - FENESTRATION SHEATHING

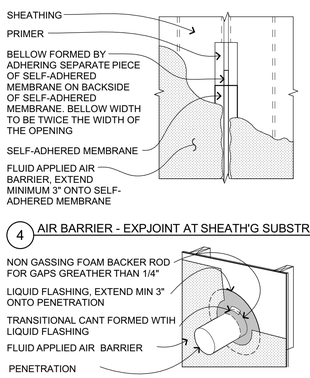

4 AIR BARRIER - EXPJOINT AT SHEATH'G SUBSTRATE

5 AIR BARRIER - PENETRATION

NOTE: PRIMER WHERE NOT SHOWN OR INDICATED ON DETAIL DRAWINS, REFER TO MATERIAL PRODUCT DATASHEETS FOR PRIMER APPLICATION REQUIREMENTS.

AIR BARRIER

1/4" = 1'-0" B201103.1 **8**

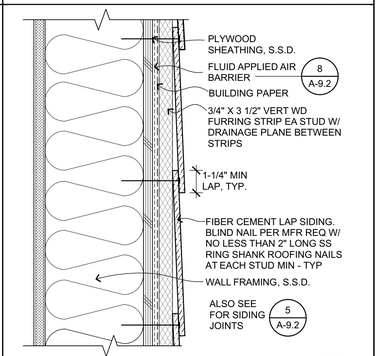

FIBER CEM LAPPED SIDING

3" = 1'-0" B201302 **3**

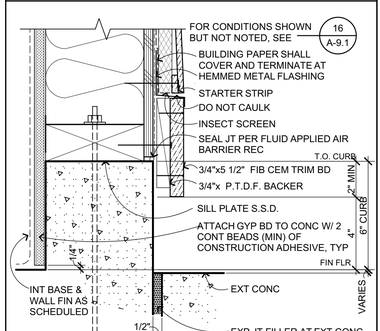

EXT CURB AT FIBER CEM SIDING

3" = 1'-0" B201304.1 **4**

QUATTROCCHI KWOK ARCHITECTS

Main:
636 Fifth Street, Santa Rosa, CA 95404
East Bay:
55 Harrison Street, Suite 525,
Oakland, CA 94607
(707) 576-0829

LICENSED ARCHITECT
JIM THEISS
LICENSE # C22643
EXP JUNE 30, 2021
STATE OF CALIFORNIA

SIGNED: MAY 5, 2021

FREEDOM HIGH SCHOOL

NEW AUXILIARY GYMNASIUM

1050 NEROLY RD,
OAKLEY, CA 94561

LIBERTY UNION HIGH SCHOOL DISTRICT

DSA APP NO. 01-119278

ARCH PROJECT NO:	1869.00
DRAWN BY:	PAG
DRAWING SCALE:	AS NOTED
PTN: 61721-78	FILE NO: 7-H4

BID DOCUMENT

APRIL 27, 2021

SHEET TITLE

WALL DETAILS

SHEET NUMBER

A-9.2

BIMcloud: archiserver - BIMcloud Basic for ARCHICAD 22/1869.00 Freedom HS Aux. Gym CD.4/27/2021;1:27 PM

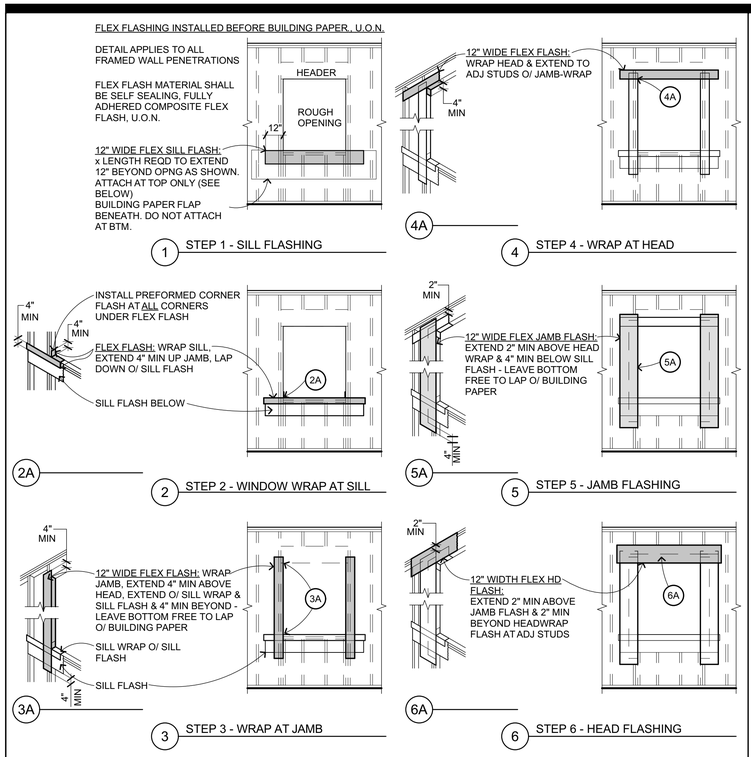

TYP FLASHING/PAPERING

1/4" = 1'-0" B201103 **18**

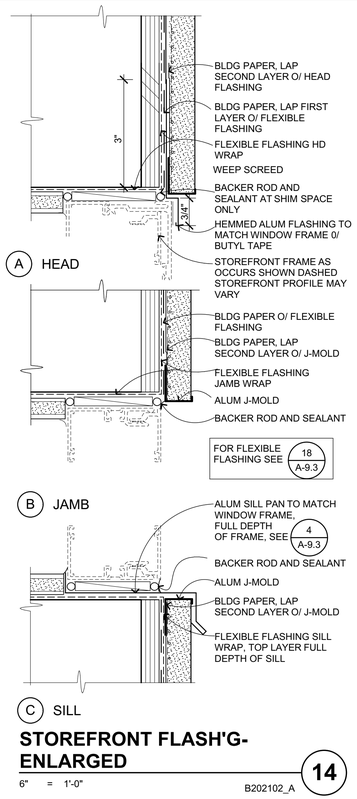

STOREFRONT FLASH'G-ENLARGED

6" = 1'-0" B202102_A **14**

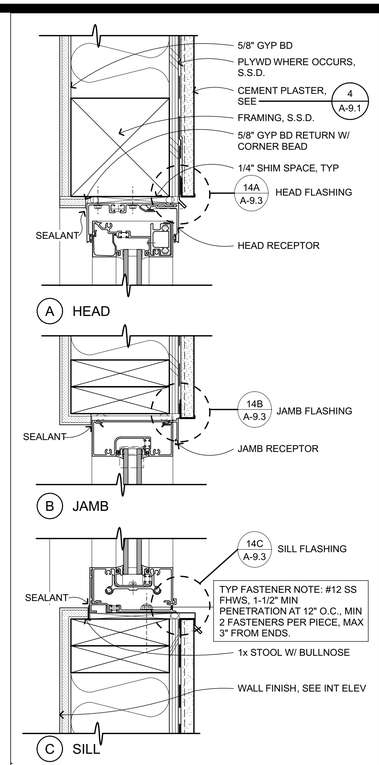

4" ALUM STOREFRONT HD/JMB/SILL

3" = 1'-0" B202101_A **10**

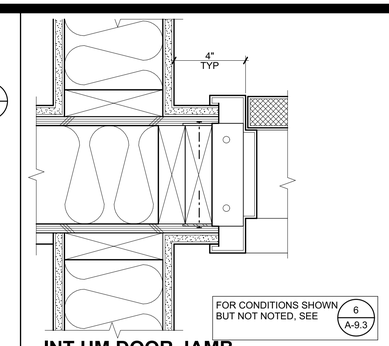

INT HM DOOR JAMB ADJACENCIES

3" = 1'-0" C102502A **5**

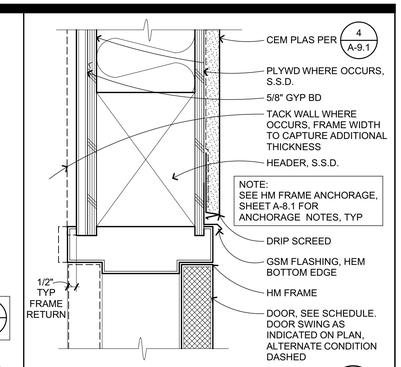

EXT HM DR HEAD

3" = 1'-0" B203101_A **1**

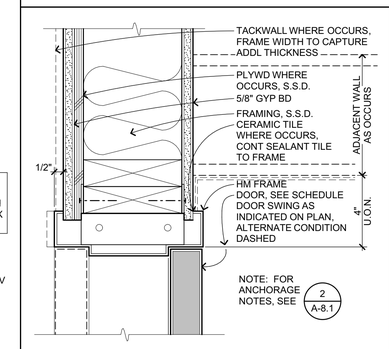

INT DOOR HEAD/JAMB

3" = 1'-0" C102501 **6**

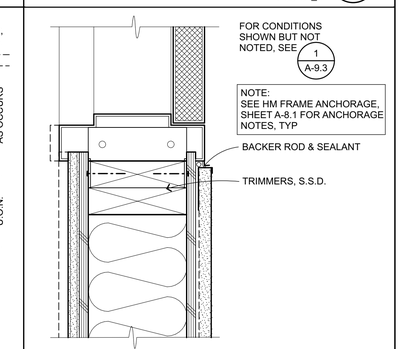

EXT HM JAMB

3" = 1'-0" B203102_A **2**

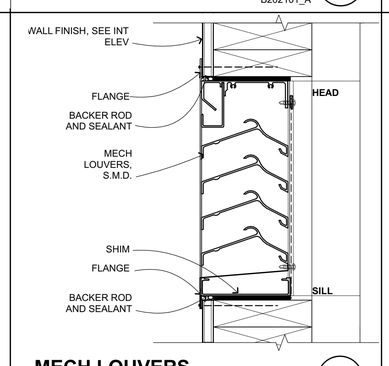

MECH LOUVERS

3" = 1'-0" 1869.05 **11**

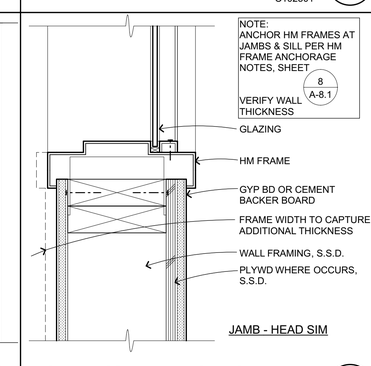

INTERIOR HM WINDOW

3" = 1'-0" C102301 **7**

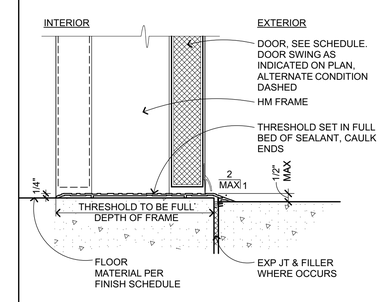

THRESHOLD

3" = 1'-0" B203103 **3**

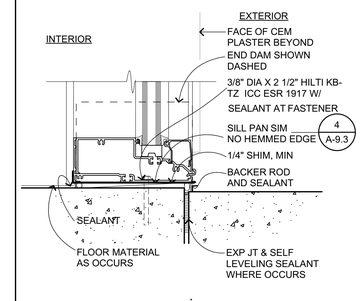

ALUM STOREFRONT AT GRADE

3" = 1'-0" B202104 **8**

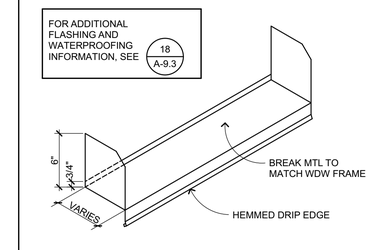

SILL PAN

1 1/2"= 1'-0" B201105 **4**

QUATTROCCHI KWOK ARCHITECTS
Main:
636 Fifth Street, Santa Rosa, CA 95404
East Bay:
55 Harrison Street, Suite 525, Oakland, CA 94607
(707) 576-0829

LICENSED ARCHITECT
JIM THEISS
LICENSE # C22643
EXP JUNE 30, 2021
STATE OF CALIFORNIA
SIGNED: MAY 5, 2021

FREEDOM HIGH SCHOOL

NEW AUXILIARY GYMNASIUM

1050 NEROLY RD,
OAKLEY, CA 94561

LIBERTY UNION HIGH SCHOOL DISTRICT

DSA APP NO. 01-119278

ARCH PROJECT NO:	1869.00
DRAWN BY:	PAG
DRAWING SCALE:	AS NOTED
PTN: 61721-78	FILE NO: 7-H4

BID DOCUMENT

APRIL 27, 2021

SHEET TITLE

OPENING DETAILS

SHEET NUMBER

A-9.3

BIMcloud: archiserver - BIMcloud Basic for ARCHICAD 22/1869.00 Freedom HS Aux. Gym CD4/27/2021;1:27 PM

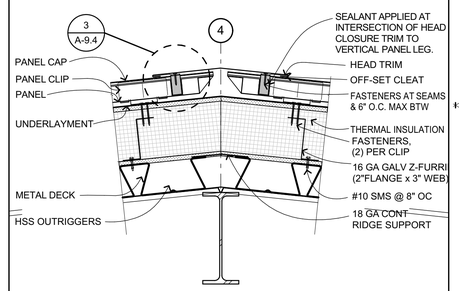

FIXED RIDGE 5

1 1/2"= 1'-0"

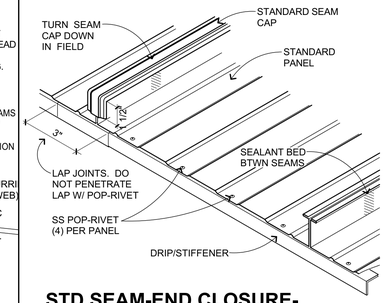

STD SEAM-END CLOSURE-RMER SPAN 1

3" = 1'-0" B301114

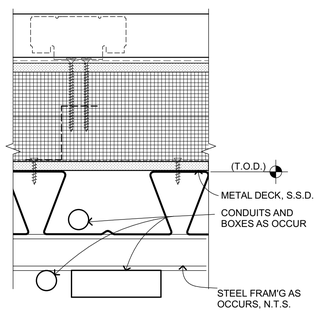

MTL ROOF & DECK W/ STL FRAMING 22

3" = 1'-0" B301119.1

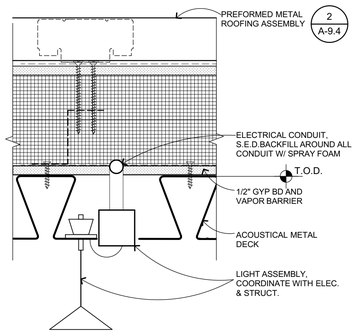

MTL SOUND DECK ATTACHMENTS 18

3" = 1'-0" B301119A

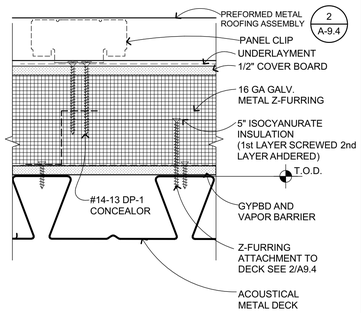

MTL ROOFING AT MTL SOUND DECK 14

3" = 1'-0" B301119

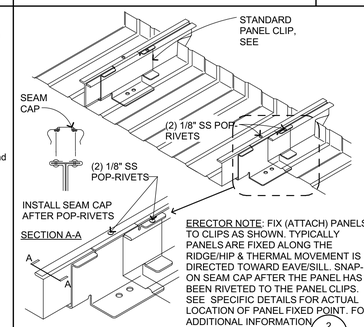

ERECTOR NOTE: FIX (ATTACH) PANELS TO CLIPS AS SHOWN. TYPICALLY PANELS ARE FIXED ALONG THE RIDGE/HIP & THERMAL MOVEMENT IS DIRECTED TOWARD EAVE/SILL. SNAP-ON SEAM CAP AFTER THE PANEL HAS BEEN RIVETED TO THE PANEL CLIPS. SEE SPECIFIC DETAILS FOR ACTUAL LOCATION OF PANEL FIXED POINT. FOR ADDITIONAL INFORMATION, SEE 2 A-9.4

MTL ROOF FIXED PANEL - RMER SPAN 10

1 1/2"= 1'-0" B301117

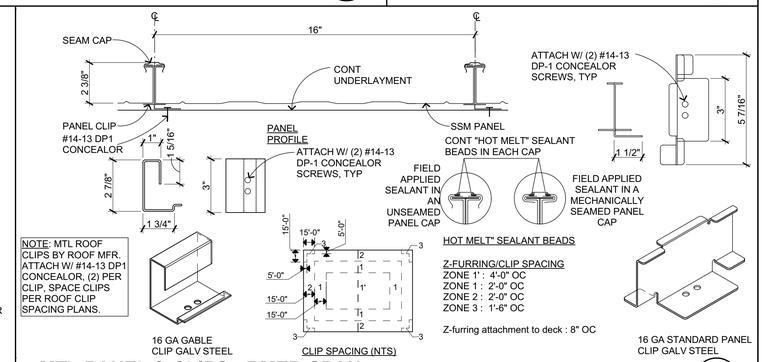

NOTE: MTL ROOF CLIPS BY ROOF MFR. ATTACH W/ #14-13 DP1 CONCEALOR, (2) PER CLIP. SPACE CLIPS PER ROOF CLIP SPACING PLANS.

Z-FURRING/CLIP SPACING
ZONE 1 : 4'-0" OC
ZONE 1 : 2'-0" OC
ZONE 2 : 2'-0" OC
ZONE 3 : 1'-6" OC

Z-furring attachment to deck : 8" OC

MTL PANEL & CLIPS - RMER SPAN 2

3" = 1'-0" B301116

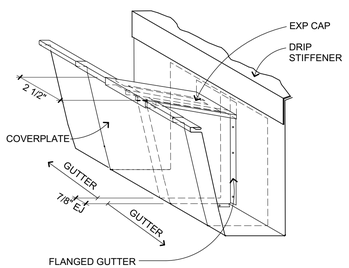

NOTE: SPACED AT 50'-0" MAX O.C.

GUTTER EXPANSION JOINT 23

3" = 1'-0" B304103

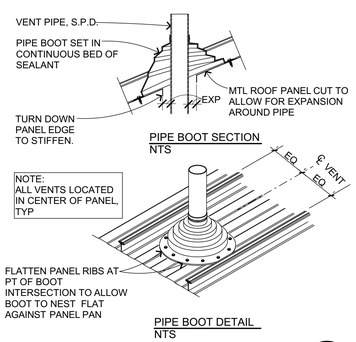

NOTE: ALL VENTS LOCATED IN CENTER OF PANEL, TYP

VENT BOOT AT MTL ROOF 24

6" = 1'-0" B301115

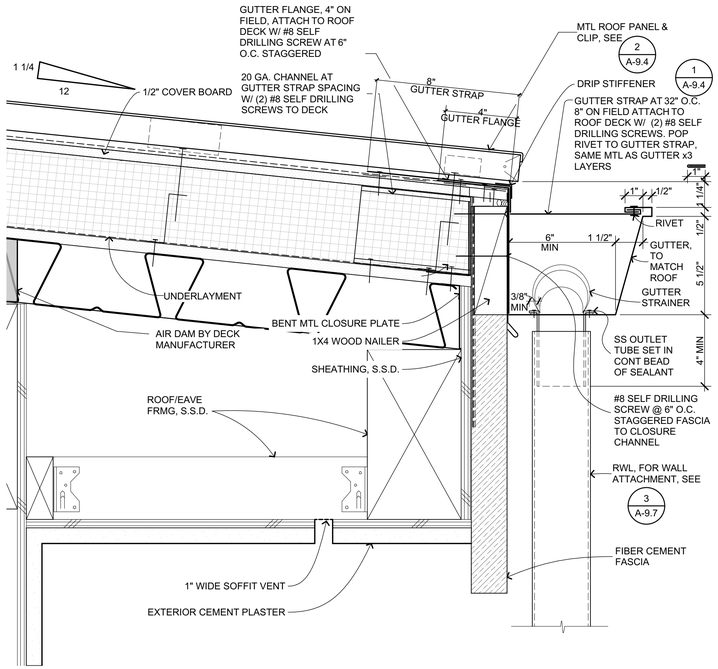

GUTTER - METAL ROOFING / FRAMING 16

3" = 1'-0" B304101

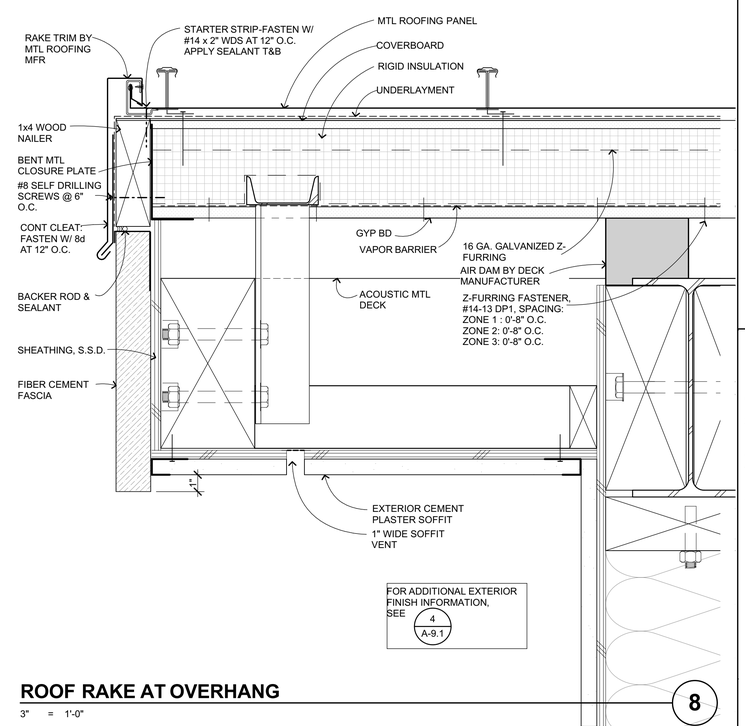

ROOF RAKE AT OVERHANG 8

3" = 1'-0" B301113

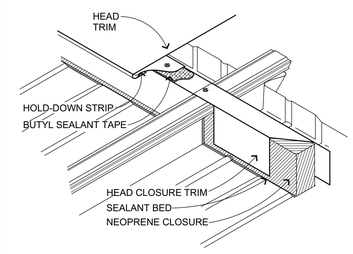

MTL ROOF HD ASSEMBLY - RMER SPAN 3

3" = 1'-0" B301113

1. STANDING SEAM METAL ROOFING CLIPS TO BE SECURED PER 2 A-9.4 OR 5 A-9.4

CLIP SPACING TO BE AT 24" O.C. MAX.

2. ALL OTHER FASTENERS FOR FLASHING AND APPURTENANCES SHALL EXTEND 1/2" MINIMUM BEYOND WALL OF METAL FRAMING OR SOLID BACKING AND SHALL PENETRATE 1 1/2" MINIMUM INTO WOOD FRAMING OR SOLID BLOCKING. FASTENERS SHALL BE #10 MINIMUM SCREWS OF APPROVED TYPE (STAINLESS STEEL WITH NEOPRENE WASHERS WHERE EXPOSED).

3. ISOLATE ALL GSM AND OTHER FERROUS FLASHINGS AND FASTENERS FROM NON-FERROUS MATERIALS WITH SELF - ADHERED FLEXIBLE MEMBRANE.

TYP MTL ROOF NOTES 4

3" = 1'-0" B301118

QUATTROCCHI KWOK ARCHITECTS

Main:
636 Fifth Street, Santa Rosa, CA 95404
East Bay:
55 Harrison Street, Suite 525,
Oakland, CA 94607
(707) 576-0829

LICENSED ARCHITECT
JIM THEISS
LICENSE # C22643
EXP JUNE 30, 2021
STATE OF CALIFORNIA

SIGNED: MAY 5, 2021

FREEDOM HIGH SCHOOL

NEW AUXILIARY GYMNASIUM

1050 NEROLY RD,
OAKLEY, CA 94561

LIBERTY UNION HIGH SCHOOL DISTRICT

DSA APP NO. 01-119278

ARCH PROJECT NO:	1869.00
DRAWN BY:	PAG
DRAWING SCALE:	AS NOTED
PTN: 61721-78	FILE NO: 7-H4

BID DOCUMENT

APRIL 27, 2021

SHEET TITLE

ROOF DETAILS

SHEET NUMBER

A-9.4

BIMcloud: archiserver - BIMcloud Basic for ARCHICAD 22/1869.00 Freedom HS Aux. Gym CD;4/27/2021;1:27 PM

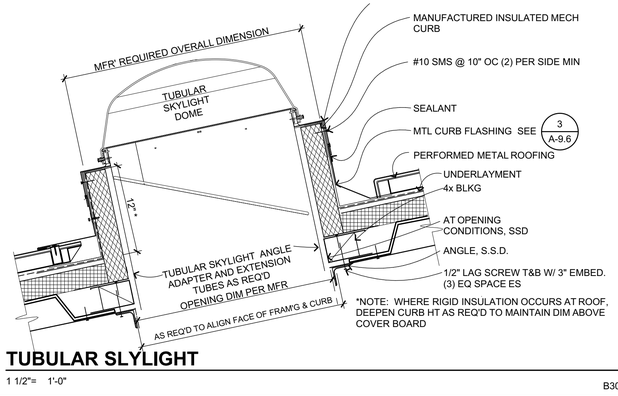

TUBULAR SLYLIGHT 9

1 1/2"= 1'-0" B302101

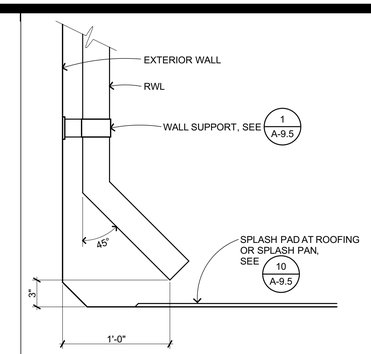

RWL DISCHARGE @ ROOF 5

1 1/2"= 1'-0" B304213

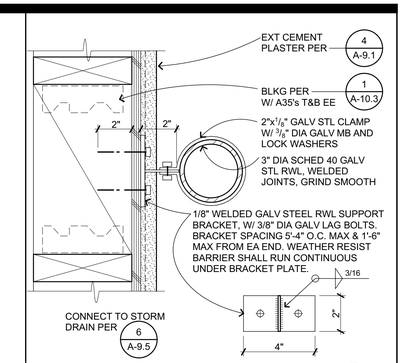

RWL SUPT AT CEM PLAS 1

3" = 1'-0" B304201

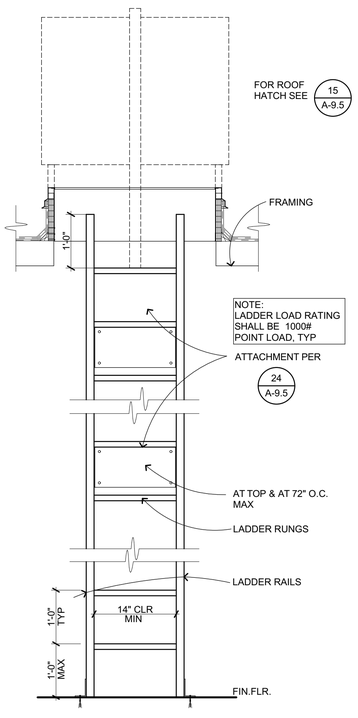

INT ALUM LADDER 23

3/4" = 1'-0" C103401

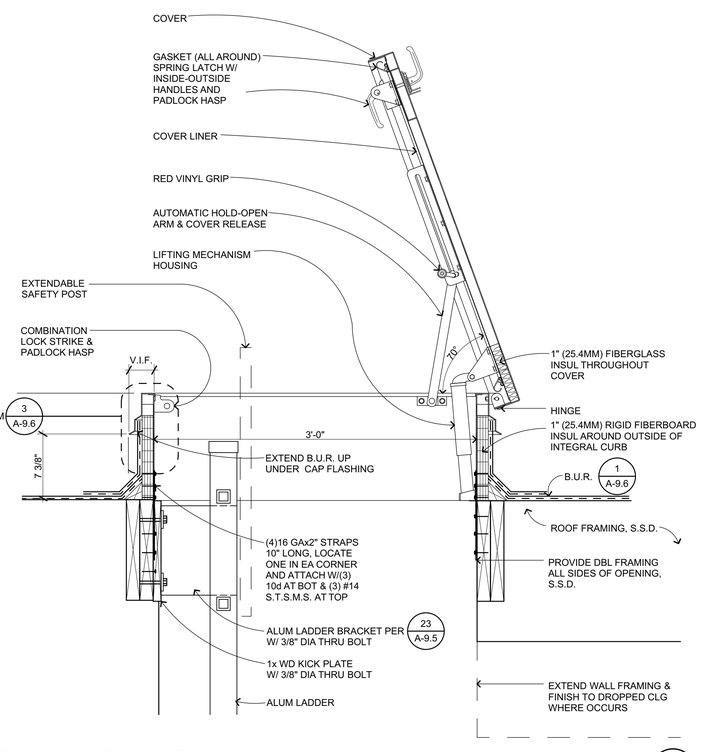

ROOF ACCESS HATCH 15

1 1/2"= 1'-0" B302301

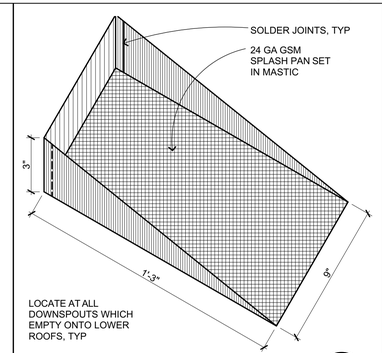

GSM SPLASH PAN 10

3" = 1'-0" B304210

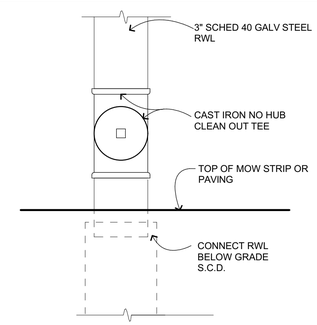

RWL AT GRADE 6

3" = 1'-0" B304209

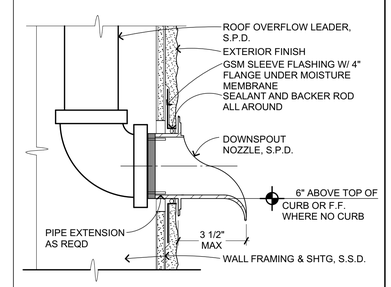

ROOF OVERFLOW LEADER NOZZLE 2

3" = 1'-0" B304214

ERECTOR NOTE:

DRY IN SUBSTRATE WITH ICE AND WATER SHIELD PRIOR TO INSTALLING PANELS. BEGIN INSTALLATION AT EAVE, WORKING UP ROOF SLOPE, KEEPING IN MIND TO ALWAYS DIRECTING WATER TO SHED PROPERLY. ALL EXPOSED SCREW-TYPE FASTENERS SHALL HAVE NEOPRENE WASHERS. ALL POP-RIVETS SHALL BE WATERPROOF. ALL FASTENERS APPROVED BY ROOF MFR. ALL FLASHINGS SHALL BE PREFINISHED TO MATCH METAL ROOF SYSTEM.

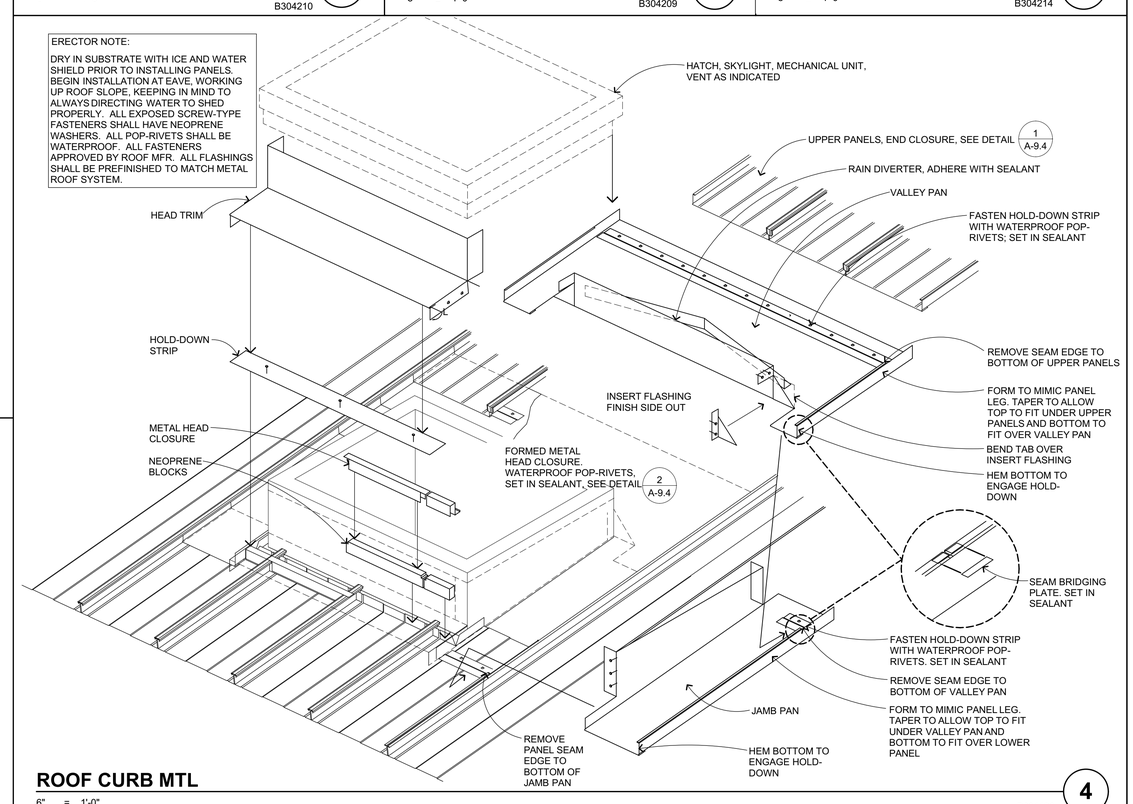

ROOF CURB MTL 4

6" = 1'-0" B301130

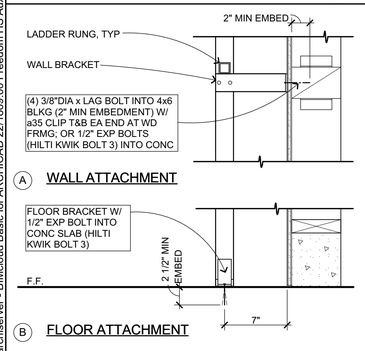

LADDER ATTACHMENT 24

1 1/2"= 1'-0" C103403

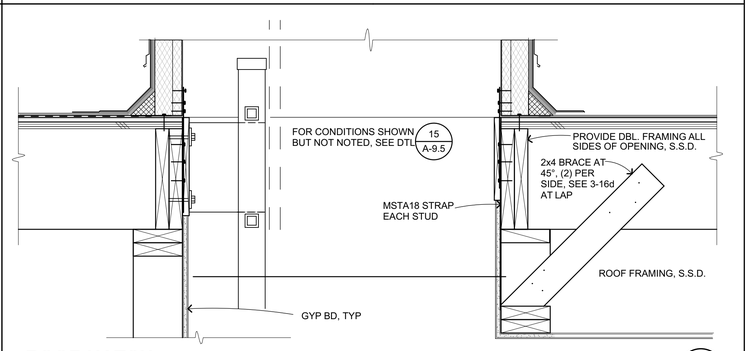

ROOF HATCH 16

1 1/2"= 1'-0" B302303

QUATTROCCHI KWOK ARCHITECTS

Main:
636 Fifth Street, Santa Rosa, CA 95404
East Bay:
55 Harrison Street, Suite 525,
Oakland, CA 94607
(707) 576-0829

LICENSED ARCHITECT
JIM THEISS
LICENSE # C22643
EXP JUNE 30, 2021
STATE OF CALIFORNIA

SIGNED: MAY 5, 2021

FREEDOM HIGH SCHOOL

NEW AUXILIARY GYMNASIUM

1050 NEROLY RD,
OAKLEY, CA 94561

LIBERTY UNION HIGH SCHOOL DISTRICT

DSA APP NO. 01-119278

ARCH PROJECT NO:	1869.00
DRAWN BY:	PAG
DRAWING SCALE:	AS NOTED
PTN: 61721-78	FILE NO: 7-H4

BID DOCUMENT

APRIL 27, 2021

SHEET TITLE

ROOF DETAILS

SHEET NUMBER

A-9.5

BIMcloud: archiserver - BIMcloud Basic for ARCHICAD 22/1869.00 Freedom HS Aux. Gym CD.4/27/2021;1:27 PM

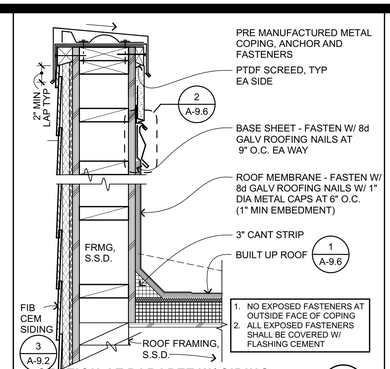

SECTION AT PARAPET W/ SIDING

1 1/2"= 1'-0" B201202.1 **9**

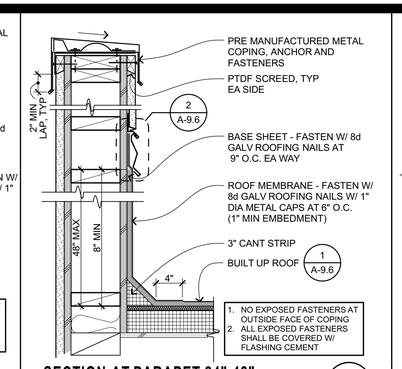

SECTION AT PARAPET 24"-48"

1 1/2"= 1'-0" B301202.2 **5**

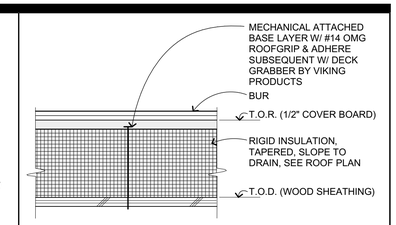

WOOD DECK - SLOPED INSULATION

TYPICAL NOTES:
1. BULT UP ROOFING (BUR) MODIFIED MINERAL SURFACE CAP SHEET OVER BASE PLY. SET ALL PLIES IN BITUMEN.
2. TOP OF ROOF ASSEMBLY (T.O.R.) DIMENSION POINT IS TOP OF COVER BOARD.

TYP B.U.R. ASSEMBLIES

3" = 1'-0" B301201 **1**

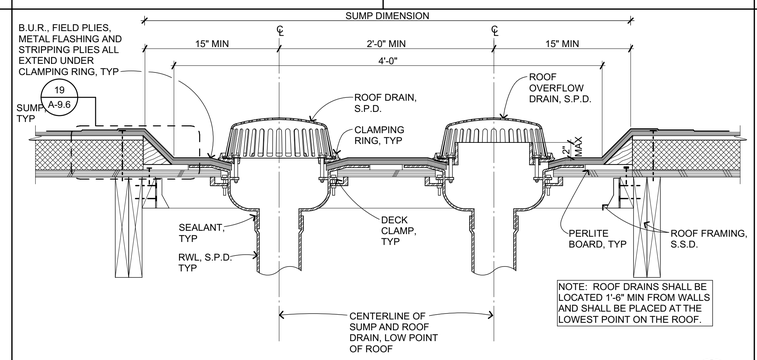

ROOF DRN W/OVERFLOW WD FRMG

1 1/2"= 1'-0" B304301_A **14**

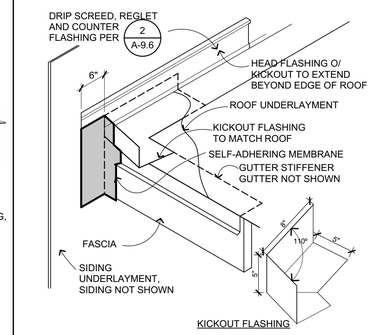

KICKOUT FLASHING

1 1/2"= 1'-0" B301220 **10**

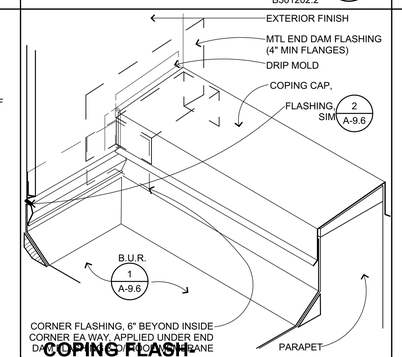

COPING FLASH INTERSECTION

1 1/2"= 1'-0" B301207 **6**

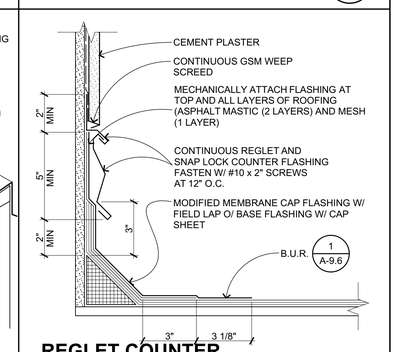

REGLET COUNTER FLASHING

3" = 1'-0" B301208 **2**

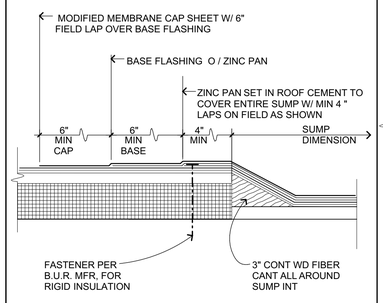

ROOF DRAIN EDGE

3" = 1'-0" B304303 **19**

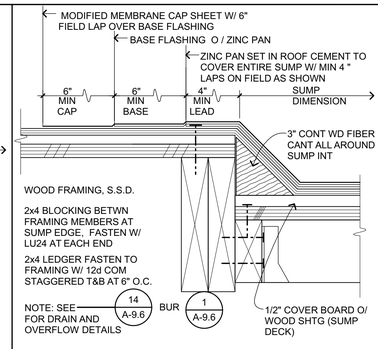

ROOF DRAIN SUMP WD ALT

3" = 1'-0" B304304 **15**

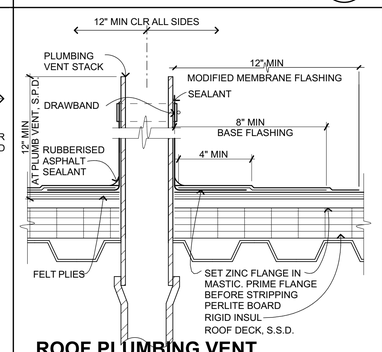

ROOF PLUMBING VENT FLASHING

3" = 1'-0" B301214 **11**

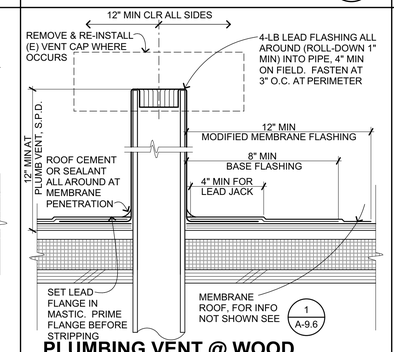

PLUMBING VENT @ WOOD DECK

3" = 1'-0" B301412 **7**

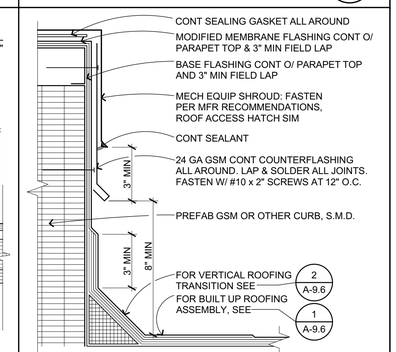

PREFAB MECH EQUIP CURB

3" = 1'-0" B301209 **3**

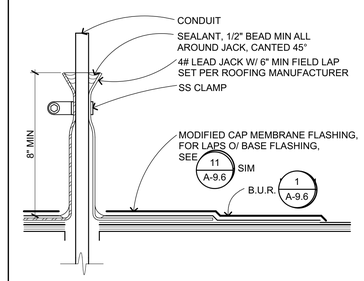

CONDUIT ROOF PENETRATION FLASH'G

3" = 1'-0" B301215 **12**

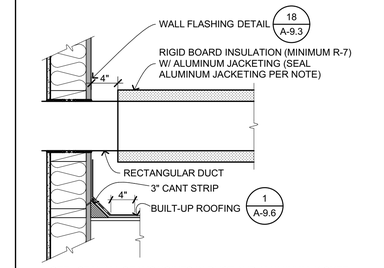

NOTE: SEAL ALL SEAMS/JOINTS IN DUCT AND ALUMINUM JACKET WITH WEATHER-PROOFING SEALANT. SEALANT SHALL BE DESIGN POLYMERICS DP-1020 FIBER-REINFORCED DUCT SEALANT. APPLY SEALANT IN STRICT CONFORMANCE WITH MANUFACTURER'S WRITTEN INSTRUCTIONS.

EXPOSED RECTANGULAR DUCT

1" = 1'-0" 01 **8**

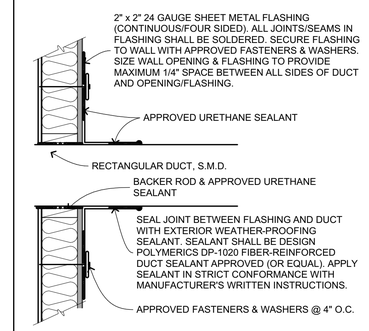

DUCT THRU WALL FLASHING

1" = 1'-0" 04 **4**

QUATTROCCHI KWOK ARCHITECTS

Main:
636 Fifth Street, Santa Rosa, CA 95404
East Bay:
55 Harrison Street, Suite 525,
Oakland, CA 94607
(707) 576-0829

LICENSED ARCHITECT
JIM THEISS
LICENSE # C22643
EXP JUNE 30, 2021
STATE OF CALIFORNIA

SIGNED: MAY 5, 2021

FREEDOM HIGH SCHOOL

NEW AUXILIARY GYMNASIUM

1050 NEROLY RD,
OAKLEY, CA 94561

LIBERTY UNION HIGH SCHOOL DISTRICT

DSA APP NO. 01-119278

ARCH PROJECT NO:	1869.00
DRAWN BY:	PAG
DRAWING SCALE:	AS NOTED
PTN: 61721-78	FILE NO: 7-H4

BID DOCUMENT

APRIL 27, 2021

SHEET TITLE

ROOF DETAILS

SHEET NUMBER

A-9.6

BIMcloud: archiserver - BIMcloud Basic for ARCHICAD 22/1869.00 Freedom HS Aux. Gym CD 4/27/2021 1:27 PM

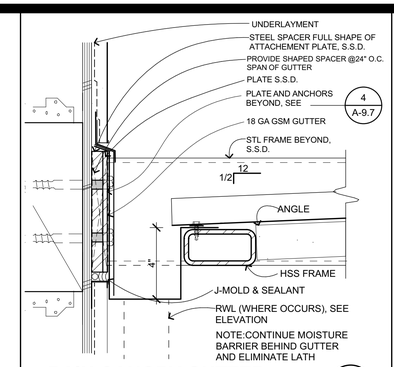

RAIN CANOPY GUTTER

3" = 1'-0" B205115 **5**

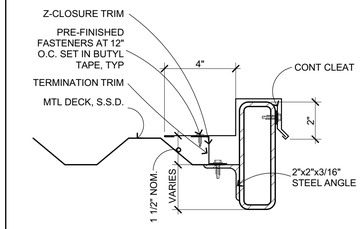

RAIN CANOPY RAKE

3" = 1'-0" B205113 **1**

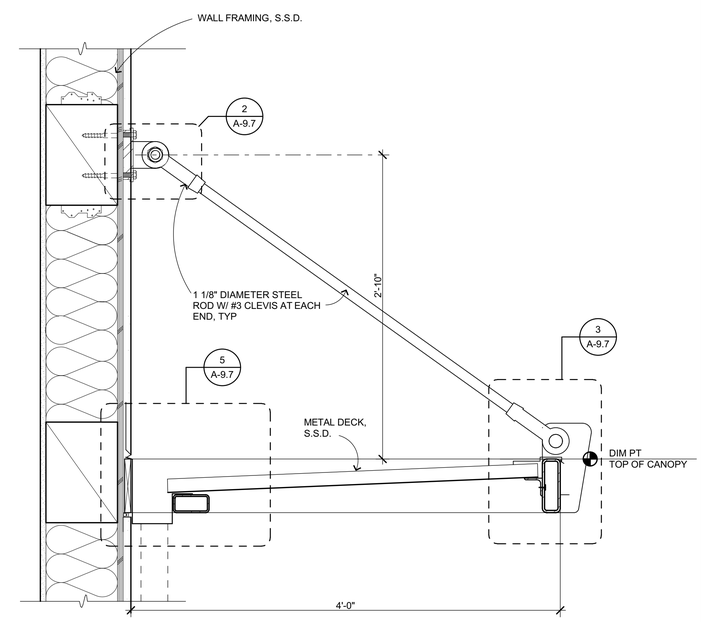

TYPICAL RAIN CANOPY

1 1/2"= 1'-0" B205110 **7**

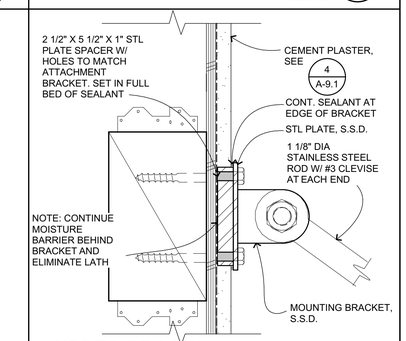

UPPER BRACKET INSTALLATION

3" = 1'-0" B205002 **2**

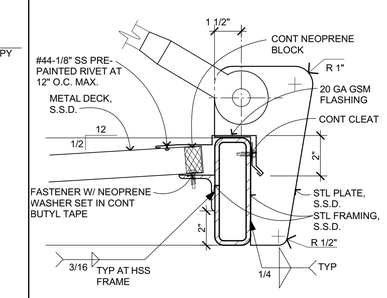

RAIN CANOPY HEAD

3" = 1'-0" B205112 **3**

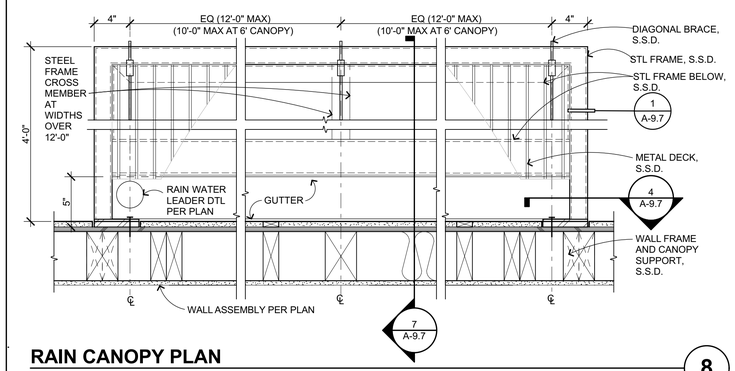

RAIN CANOPY PLAN

1 1/2"= 1'-0" B205111 **8**

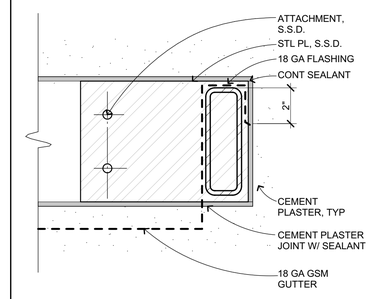

RAIN CANOPY ATTACHMENT

3" = 1'-0" B205114 **4**

QUATTROCCHI KWOK ARCHITECTS

Main:
636 Fifth Street, Santa Rosa, CA 95404
East Bay:
55 Harrison Street, Suite 525,
Oakland, CA 94607
(707) 576-0829

LICENSED ARCHITECT
JIM THEISS
LICENSE # C22643
EXP JUNE 30, 2021
STATE OF CALIFORNIA

SIGNED: MAY 5, 2021

FREEDOM HIGH SCHOOL

NEW AUXILIARY GYMNASIUM

1050 NEROLY RD,
OAKLEY, CA 94561

LIBERTY UNION HIGH SCHOOL DISTRICT

DSA APP NO. 01-119278

ARCH PROJECT NO:	1869.00
DRAWN BY:	PAG
DRAWING SCALE:	AS NOTED
PTN: 61721-78	FILE NO: 7-H4

BID DOCUMENT

APRIL 27, 2021

SHEET TITLE

RAIN CANOPY DETAILS

SHEET NUMBER

A-9.7

BIMcloud: archiserver - BIMcloud Basic for ARCHICAD 22/1869.00 Freedom HS Aux. Gym. CD:4/27/2021;1:28 PM

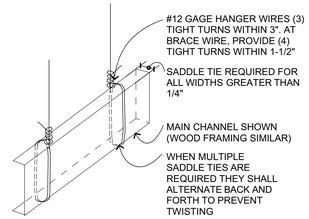

DSA IR 25.2-13 FIGURE 4.29

SADDLE TIE DETAIL

3" = 1'-0" C303221 **13**

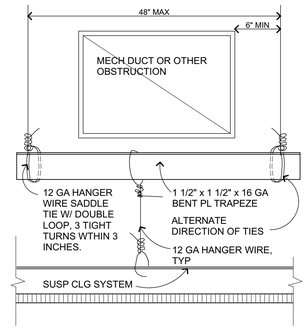

SUSP ACOUS CLG TRAPEZE

3" = 1'-0" C303203 **14**

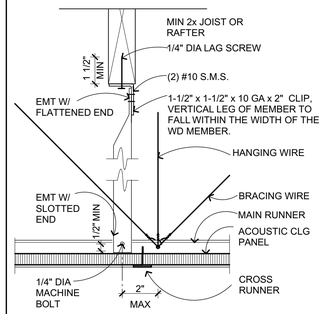

AT NON-RATED CONSTRUCTION
DSA IR 25.2-13 FIGURE 5.60 OPTION 2

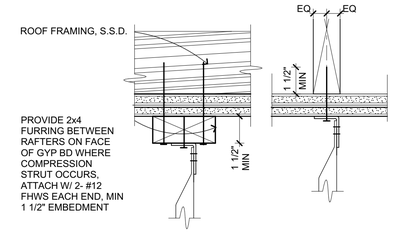

AT 1-HR RATED ASSEMBLY DSA IR 25.2-13 FIGURE 5.50 OPTION 2

2-LAYERS 5/8" TYPE 'X' GYP BD

ATTACH PER NON-RATED CONSTRUCTION, LENGTH OF SCREW AS REQUIRED TO MEET MIN PENETRATION NOTED.

FOR COMPRESSION STRUT SIZING SEE (4 / A-10.1)

(A) EMT COMPRESSION STRUT

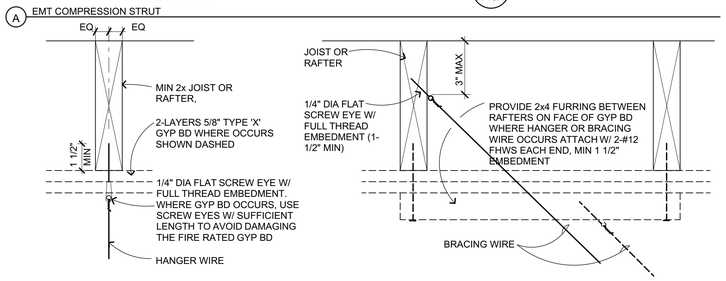

HANGER OR BRACING WIRE ANCHORS TO THE STRUCTURE SHOULD BE INSTALLED IN SUCH A MANNER THAT THE DIRECTION OF THE ANCHOR ALIGNS AS CLOSELY AS POSSIBLE W/ THE DIRECTION OF THE WIRE. HANGER AND BRACING WIRES SHALL NOT ATTACH TO OR BEND AROUND OBSTRUCTIONS INCLUDING BUT NOT LIMITED TO: PIPING, DUCTWORK, CONDUIT, AND EQUIPMENT.

FOR TYP WIRE FASTENING AT EA END OF HANGER AND BRACING WIRE CONNECTIONS SEE (1 / A-10.1)

(B) TYPICAL HANGING AND BRACING WIRES DSA IR 25.2-13 FIGURES 4.25 & 4.35

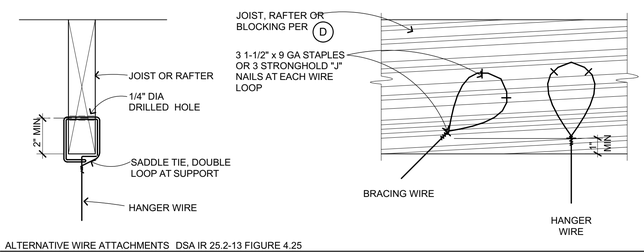

(C) ALTERNATIVE WIRE ATTACHMENTS DSA IR 25.2-13 FIGURE 4.25

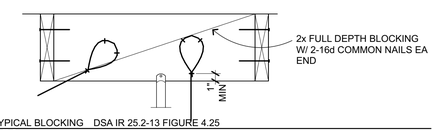

(D) TYPICAL BLOCKING DSA IR 25.2-13 FIGURE 4.25
N.T.S.

SEE ALSO (3 / A-10.1) (8 / A-10.1) (13 / A-10.1) (14 / A-10.1) (16 / A-10.1) FOR SUSPENDED CEILING CONDITIONS & NOTES

SUSP ACOUS CLG - WD FRMG

3" = 1'-0" C303204 **7**

1. GENERAL REQUIREMENTS: CBC Section 1616 & IR 25-2.13 govern the design and installation of metal suspension systems for lay-in ceilings.The details are for ceilings whose total weight, including ceiling mounted air terminals, services and light fixtures, does not exceed 4 PSF.
SEE DETAILS FOR SPECIFIC REQUIREMENTS
All ceiling grid system components shall be from a single manufacturer.
SEE SPECIFICATIONS FOR DETAILED REQUIREMENTS

2. Refer to reflected ceiling plans for locations of expansion joints and seismic separation joints as occur.

3. Lateral force bracing may be omitted for suspended acoustical ceiling systems with a ceiling area of 144 square feet or less, and fire rated suspended acoustical ceiling systems with a ceiling area of 96 square feet or less, when perimeter support in accordance with governing regulations are provided and perimeter walls are designed to carry the ceiling lateral forces.

4. For attachment of all light fixtures, flush, recessed or otherwise ceiling mounted, refer to electrical drawings for details.

5. For attachment of ceiling mounted air terminals , grilles, mechanical terminals, and flexible sprinkler hose fittings or other services be supported directly on runner, refer to mechanical drawings for details.

6. Ceiling panels shall not support any light fixture, air terminals or devices.

7. For power actuated fasteners and anchors, refer to structural drawings - General Notes & Details Sheet 1/S-M1.4

TYPICAL WIRE FASTENING:

HANGER WIRES: 12 GA WIRE WITH MINIMUM OF 3 TIGHT TURNS IN 3 INCHES, BOTH ENDS, TYPICAL.
BRACING WIRES: 12 GA WIRE WITH MINIMUM OF 4 TIGHT TURNS IN 1-1/2" EACH END, TYPICAL.

TYP SUSP CEILING NOTES

1/8" = 1'-0" C303209 2016 **1**

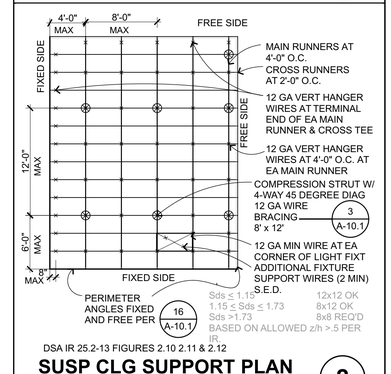

DSA IR 25.2-13 FIGURES 2.10 2.11 & 2.12

SUSP CLG SUPPORT PLAN

1/8" = 1'-0" C303208 **2**

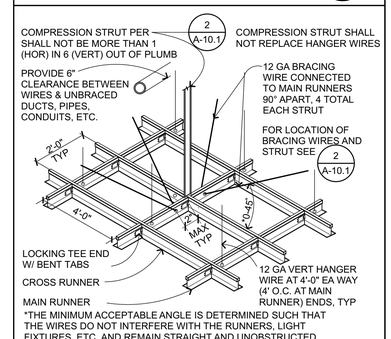

*THE MINIMUM ACCEPTABLE ANGLE IS DETERMINED SUCH THAT THE WIRES DO NOT INTERFERE WITH THE RUNNERS, LIGHT FIXTURES, ETC. AND REMAIN STRAIGHT AND UNOBSTRUCTED.

DSA IR 25.2-13 FIGURE 2.35

CROSS-TEE INTERSECTION

1 1/2"= 1'-0" C303201 **3**

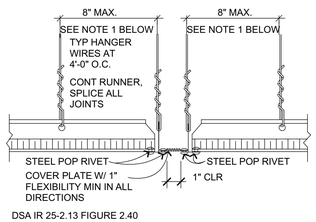

DSA IR 25.2-13 FIGURE 2.40

REQUIRED AT EXITWAY INTERSECTION OR AS EXPANSION JOINT FOR CEILING AREAS OVER 2,500 SF
1. PROVIDE #12 GAGE HANGER WIRES AT THE ENDS OF ALL MAIN AND CROSS RUNNERS WITHIN EIGHT (8) INCHES OF THE SUPPORT OR WITHIN ONE-FOURTH (1/4) OF THE LENGTH OF THE END TEE, WHICHEVER IS LESS, FOR THE PERIMETER OF THE CEILING AREA. PERIMETER WIRES ARE NOT REQUIRED WHEN THE LENGTH OF THE END TEE IS EIGHT (8) INCHES OR LESS.

SUSP CLG EXP JT MFR CLIP

6" = 1'-0" C303216 **24**

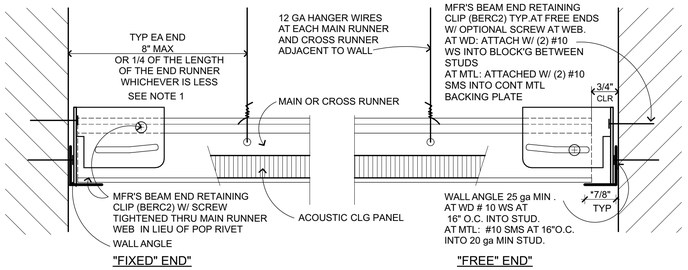

"FIXED" END" "FREE" END"

BASIS OF DESIGN: ARMSTRONG PRELUDE XL SEISMIC Rx. ICC ESR 1308. REFER TO SPECIFICATIONS FOR ALTERNATE MANUFACTURERS.

NOTE 1: PERIMETER WIRES ARE NOT REQUIRED WHEN LENGTH OF TEE IS 8" OR LESS.

*NOTE 2: PER IR 25-2.13 FIGURE 2.60 ALLOWS A SMALLER ANGLE WHEN USED IN CONJUCTION WITH A PROPRIETARY SEISMIC CLIP. USE PROPRIETARY CLIP PER MFR AS DRAWN AND AS NOTED IN SPECIFICATIONS AND ICC ESR REPORT.

SUSP CLG PERIMETER - MFR CLIP

6" = 1'-0" C303206 **16**

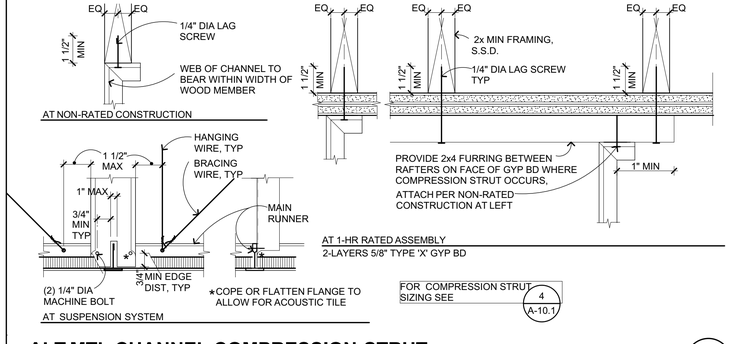

FOR COMPRESSION STRUT SIZING SEE (4 / A-10.1)

ALT MTL CHANNEL COMPRESSION STRUT

3" = 1'-0" C303202_A **8**

EMT COMPRESSION STRUT	MAXIMUM LENGTH
1/2" DIA EMT (0.042" WALL TH)	4'-7"
3/4" DIA EMT (0.049" WALL TH)	7'-5"
1" DIA EMT (0.057" WALL TH)	9'-9"
1 1/4" DIA EMT (0.065" WALL TH)	12'-9"
1-1/2" DIA EMT (0.065" WALL TH)	14'.-9"
2" DIA EMT (0.065" WALL TH)	18'-10"

CHANNEL COMPRESSION STRUT	MAXIMUM LENGTH
250S125-33	5'-0"
250S137-33	6'-10"
362S137-33	8'-0"
250137-43	8'-10"
400S137-43	10'-10"

COMPRESSION STRUT TABLE

1' = 1'-0" C303214 **4**

QUATTROCCHI KWOK ARCHITECTS
Main:
636 Fifth Street, Santa Rosa, CA 95404
East Bay:
55 Harrison Street, Suite 525,
Oakland, CA 94607
(707) 576-0829

LICENSED ARCHITECT
JIM THEISS
LICENSE # C22643
EXP JUNE 30, 2021
STATE OF CALIFORNIA
SIGNED: MAY 5, 2021

FREEDOM HIGH SCHOOL

NEW AUXILIARY GYMNASIUM

1050 NEROLY RD,
OAKLEY, CA 94561

LIBERTY UNION HIGH SCHOOL DISTRICT

DSA APP NO. 01-119278

ARCH PROJECT NO:	1869.00
DRAWN BY:	PAG
DRAWING SCALE:	AS NOTED
PTN: 61721-78	FILE NO: 7-H4

BID DOCUMENT

APRIL 27, 2021

SHEET TITLE

CEILING DETAILS WOOD

SHEET NUMBER

A-10.1

BIMcloud: archiserver - BIMcloud Basic for ARCHICAD 22/1869.00 Freedom HS Aux. Gym CD:4/27/2021;1:28 PM

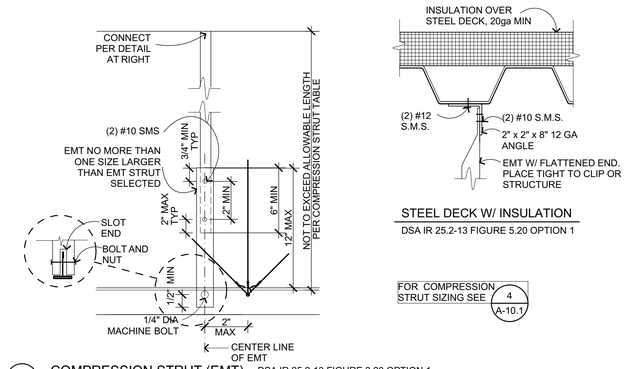

STEEL DECK W/ INSULATION

DSA IR 25.2-13 FIGURE 5.20 OPTION 1

FOR COMPRESSION STRUT SIZING SEE 4 / A-10.1

A COMPRESSION STRUT (EMT) DSA IR 25.2-13 FIGURE 3.20 OPTION 1

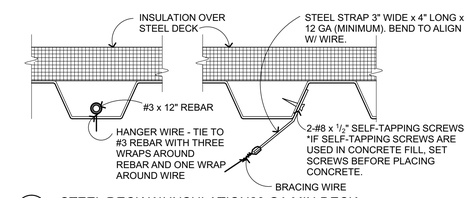

B STEEL DECK W/ INSULATION20 GA MIN DECK

DSA IR 25.2-13 FIGURE 4.20

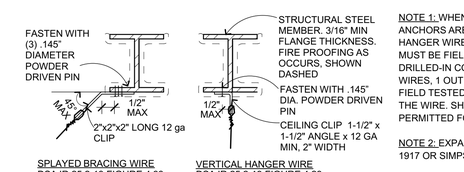

SPLAYED BRACING WIRE
DSA IR 25.2-13 FIGURE 4.33

VERTICAL HANGER WIRE
DSA IR 25.2-13 FIGURE 4.23

E AT STEEL BEAM

NO PIN IS TO BE INSTALLED IN THE PROTECTED ZONE OF ANY STEEL MEMBER

NOTE 1: WHEN DRILLED-IN CONCRETE ANCHORS OR SHOT-IN ANCHORS ARE USED IN REINFORCED CONCRETE FOR HANGER WIRES, 1 OUT OF10 WIRE/ANCHOR ASSEMBLIES MUST BE FIELD TESTED FOR 200 lbs IN TENSION. WHEN DRILLED-IN CONCRETE ANCHORS ARE USED FOR BRACING WIRES, 1 OUT OF 2 WIRE/ANCHOR ASSEMBLIES MUST BE FIELD TESTED FOR 440 lbs. IN TENSION IN THE DIRECTION OF THE WIRE. SHOT-IN ANCHORS IN CONCRETE ARE NOT PERMITTED FOR BRACING WIRES.

NOTE 2: EXPANSION ANCHORS HILTI KIWK BOLT T2 ICC ESR 1917 OR SIMPSON STRONG BOLT 2 ICC ESR 3037

FOR SUSPENDED CEILING CONDITIONS & NOTES SEE ALSO

3 / A-10.1 | 8 / A-10.1 | 13 / A-10.1 | 14 / A-10.1 | 16 / A-10.1

SUSPENDED ACOUSTIC CEILING - MTL DECK

3" = 1'-0"

C303207

3

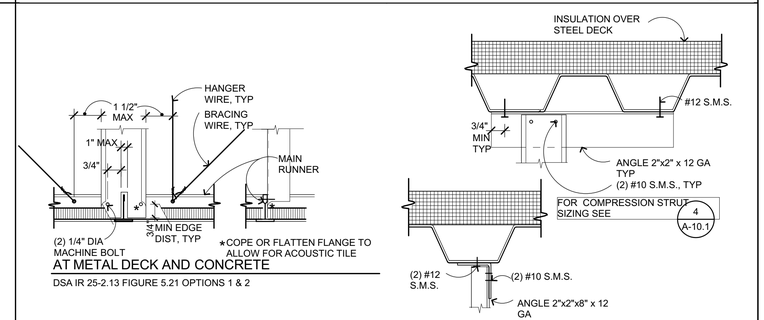

AT METAL DECK AND CONCRETE

DSA IR 25-2.13 FIGURE 5.21 OPTIONS 1 & 2

STEEL DECK W/ INSULATION 20 GA MIN DECK

DSA IR 25-2.13 FIGURE 5.20 OPTIONS 1 & 2

ALT MTL CHANNEL STRUT

3" = 1'-0"

C303202B

4

QUATTROCCHI KWOK ARCHITECTS

Main:
636 Fifth Street, Santa Rosa, CA 95404
East Bay:
55 Harrison Street, Suite 525,
Oakland, CA 94607
(707) 576-0829

LICENSED ARCHITECT
JIM THEISS
LICENSE # C22643
EXP JUNE 30, 2021
STATE OF CALIFORNIA

SIGNED: MAY 5, 2021

FREEDOM HIGH SCHOOL

NEW AUXILIARY GYMNASIUM

1050 NEROLY RD,
OAKLEY, CA 94561

LIBERTY UNION HIGH SCHOOL DISTRICT

DSA APP NO. 01-119278

ARCH PROJECT NO:	1869.00
DRAWN BY:	PAG
DRAWING SCALE:	AS NOTED
PTN: 61721-78	FILE NO: 7-H4

BID DOCUMENT

APRIL 27, 2021

SHEET TITLE

CEILING DETAILS AT METAL DECK

SHEET NUMBER

A-10.2

BIMcloud: archiserver - BIMcloud Basic for ARCHICAD 22/1869.00 Freedom HS Aux. Gym_CD:4/27/2021;1:28 PM

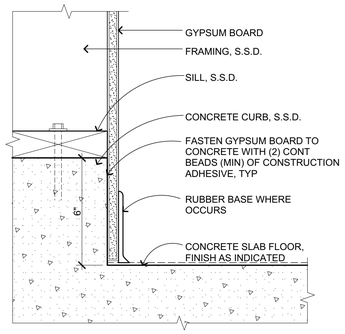

CONC CURB AT INT WALL — 17

3" = 1'-0" C301101

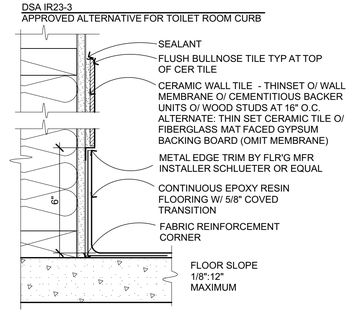

INTERIOR EPOXY BASE — 13

3" = 1'-0" C302102_A

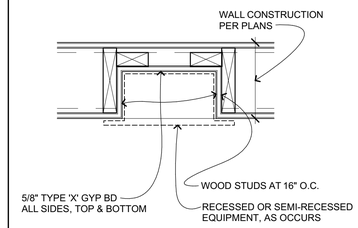

RECESS AT WALL — 9

1 1/2"= 1'-0" C104102

NOTES:
1. GRAB BARS SHALL NOT ROTATE.
2. GRAB BARS AND ANY SURFACE ADJACENT TO THEM CANNOT HAVE ANY SHARP OR ABRASIVE ELEMENTS.
3. CBC 11B-609.8 GRAB BARS & MOUNTINGS SHALL W/STAND 250 LBS HORIZONTAL OR VERTICAL LOADING.

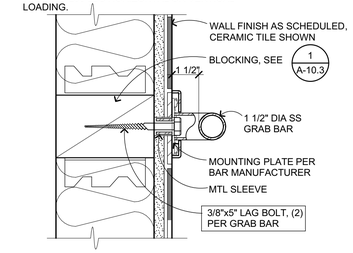

GRAB BAR ATTACH — 5

3" = 1'-0" C103101_A

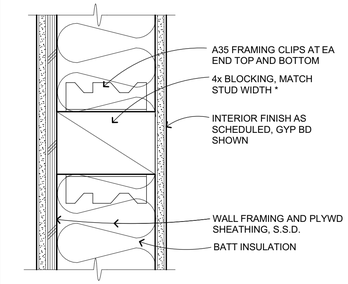

TYPICAL WALL OR CEILING BLOCKING / BACKING FOR ATTACHING FIXTURES, EQUIPMENT, CABINETS, REQUIRED

* WHERE STUD WIDTH > 5 1/2", 4 x 6 AT SIDE OF ATTACHMENT MAY BE USED.

BLK'G/BACKING-WD — 1

3" = 1'-0" C108101_A

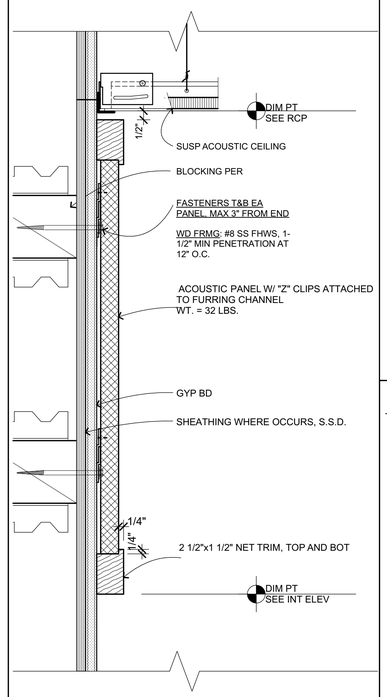

ACOUSTIC WALL PANEL — 11

3" = 1'-0"

1869.03

NOTES:
1. GRAB BARS SHALL NOT ROTATE.
2. GRAB BARS AND ANY SURFACE ADJACENT TO THEM CAN NOT HAVE ANY SHARP OR ABRASIVE ELEMENTS.
3. GRAB BARS AND MOUNTINGS SHALL WITHSTAND 250 LBS SIDE AND 500 LBS TOTAL WEIGHT/MIDDLE.

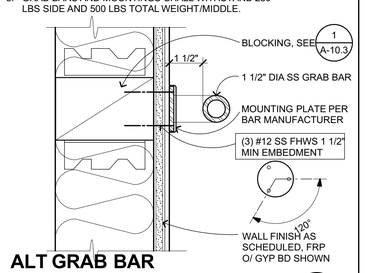

ALT GRAB BAR ATTACHMENT — 6

3" = 1'-0" C103102

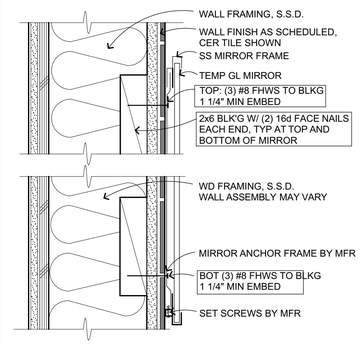

MIRROR ATTACHMENT — 2

3" = 1'-0" C103103_A

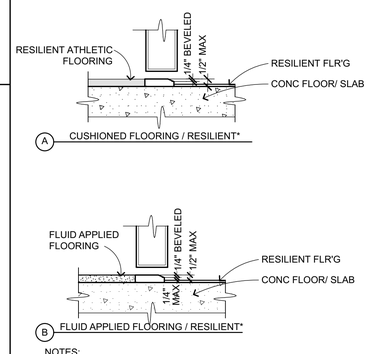

NOTES:
1. RESILIENT FLOORING - TILE OR SHEET MATERIAL AS NOTED OR SPECIFIED ELSEWHERE.
2. WHERE TRANSITION STRIP > 1/4" HT SHALL BE BEVELED 1:2 MAX OR EQUIVALENT THERETO.
3. DOOR AS OCCURS, TYP.

FLOOR TRANSITIONS/SILLS — 15

3" = 1'-0" C102601

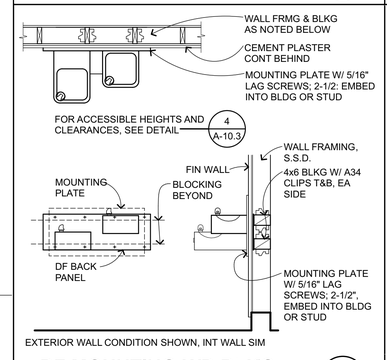

DF MOUNTING-WD BLKG — 7

1/2" = 1'-0" D208107

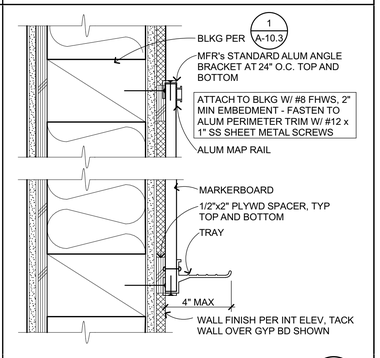

MARKERBD ATTACH — 3

3" = 1'-0" C103201_A

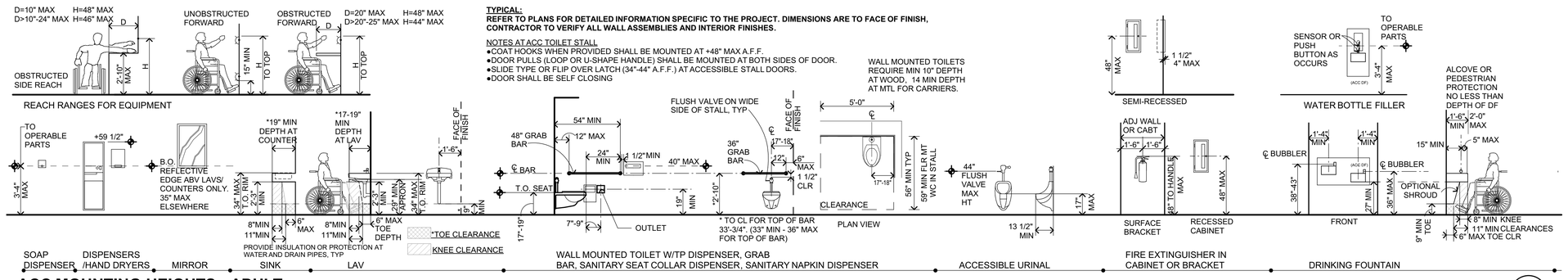

TYPICAL:
REFER TO PLANS FOR DETAILED INFORMATION SPECIFIC TO THE PROJECT. DIMENSIONS ARE TO FACE OF FINISH, CONTRACTOR TO VERIFY ALL WALL ASSEMBLIES AND INTERIOR FINISHES.

NOTES AT ACC TOILET STALL
- COAT HOOKS WHEN PROVIDED SHALL BE MOUNTED AT +48" MAX A.F.F.
- DOOR PULLS (LOOP OR U-SHAPE HANDLE) SHALL BE MOUNTED AT BOTH SIDES OF DOOR.
- SLIDE TYPE OR FLIP OVER LATCH (34"-44" A.F.F.) AT ACCESSIBLE STALL DOORS.
- DOOR SHALL BE SELF CLOSING

ACC MOUNTING HEIGHTS - ADULT — 4

1/4" = 1'-0"

QUATTROCCHI KWOK ARCHITECTS
Main:
636 Fifth Street, Santa Rosa, CA 95404
East Bay:
55 Harrison Street, Suite 525, Oakland, CA 94607
(707) 576-0829

LICENSED ARCHITECT
JIM THEISS
LICENSE # C22643
EXP JUNE 30, 2021
STATE OF CALIFORNIA
SIGNED: MAY 5, 2021

FREEDOM HIGH SCHOOL

NEW AUXILIARY GYMNASIUM

1050 NEROLY RD,
OAKLEY, CA 94561

LIBERTY UNION HIGH SCHOOL DISTRICT

DSA APP NO. 01-119278

ARCH PROJECT NO:	1869.00
DRAWN BY:	PAG
DRAWING SCALE:	AS NOTED
PTN: 61721-78	FILE NO: 7-H4

BID DOCUMENT

APRIL 27, 2021

SHEET TITLE

INTERIOR DETAILS

SHEET NUMBER

A-10.3

BIMcloud: archiserver - BIMcloud Basic for ARCHICAD 22/1869.00 Freedom HS Aux. Gym CD:4/27/2021;1:28 PM

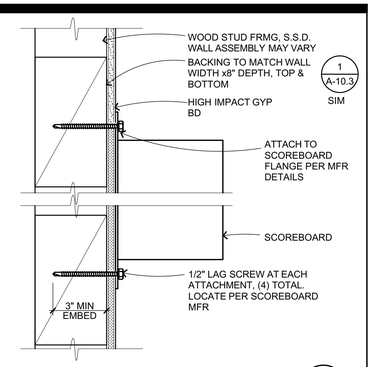

SCOREBOARD ATTACH

3" = 1'-0" C103503 **1**

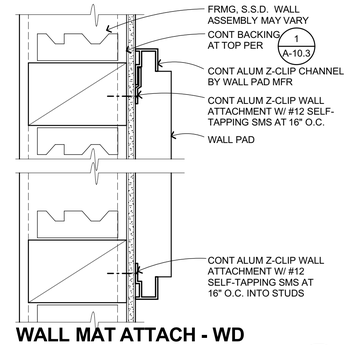

WALL MAT ATTACH - WD FRMG

3" = 1'-0" C103502 **2**

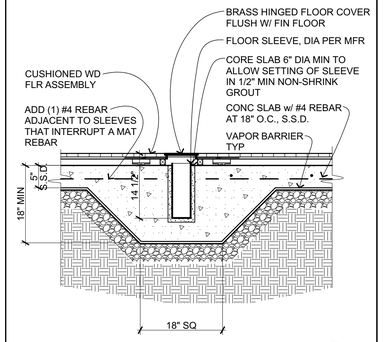

FLOOR SLEEVE

3/4" = 1'-0" C103505 **3**

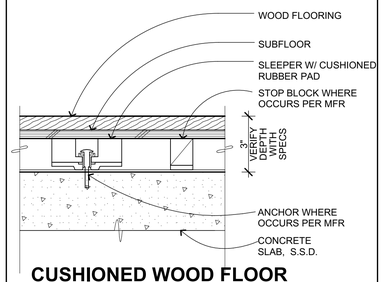

CUSHIONED WOOD FLOOR ASSEMBLY

3" = 1'-0" C302201 **12**

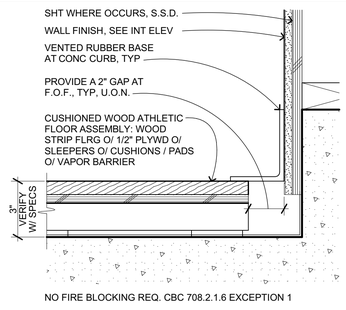

BASE @ CUSHIONED WD FLR

3" = 1'-0" C302202 **8**

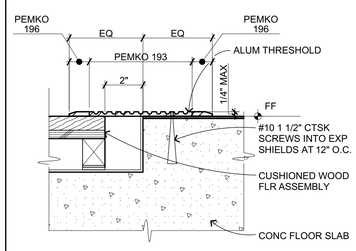

RESILIENT FLOOR/CUSHIONED WOOD FLOOR ASSEMBLY

THRESHOLD @ GYM

3" = 1'-0" C302211 **4**

QUATTROCCHI KWOK ARCHITECTS

Main:
636 Fifth Street, Santa Rosa, CA 95404
East Bay:
55 Harrison Street, Suite 525,
Oakland, CA 94607
(707) 576-0829

LICENSED ARCHITECT
JIM THEISS
LICENSE # C22643
EXP JUNE 30, 2021
STATE OF CALIFORNIA

SIGNED: MAY 5, 2021

FREEDOM HIGH SCHOOL

NEW AUXILIARY GYMNASIUM

1050 NEROLY RD,
OAKLEY, CA 94561

LIBERTY UNION HIGH SCHOOL DISTRICT

DSA APP NO. 01-119278

ARCH PROJECT NO:	1869.00
DRAWN BY:	PAG
DRAWING SCALE:	AS NOTED
PTN: 61721-78	FILE NO: 7-H4

BID DOCUMENT

APRIL 27, 2021

SHEET TITLE

INTERIOR DETAILS

SHEET NUMBER

A-10.4

BIMcloud: archiserver - BIMcloud Basic for ARCHICAD 22/1869.00 Freedom HS Aux. Gym. CD;4/27/2021;1:28 PM

F SHEAR WALL NOTES

1. PEN = PLYWOOD/OSB SHEATHING EDGE NAILING. BLOCK ALL UNSUPPORTED EDGES WITH 2x MATERIAL UNO. BLOCK EDGES WITH 3x MATERIAL WHERE NAILING IS 4"oc OR LESS. SEE 11/S-M1.2 FOR NAIL STAGGER AT ALL 3x.
2. FIELD NAILING TO BE 12"oc UNO.
3. ALL SHEATHING NAILS TO BE COMMON WIRE. SEE D/S-M0.1 AND SPECIFICATIONS FOR OTHER NAIL REQUIREMENTS.
4. ALL EXTERIOR WALLS NOT DESIGNATED AS SHEAR WALLS ON PLANS TO HAVE SHEATHING AND PEN NAILING PER SHEAR WALL TYPE 'A'.
5. SHEAR WALL LENGTHS, WHERE NOTED, ARE MINIMUM. DO NOT LOCATE HOLDOWNS FROM THESE DIMENSIONS. SAD FOR ACTUAL WALL LENGTHS.
6. HOLDOWN REFERS TO SIMPSON STRONG TIE CO. HOLDOWNS. INSTALL HOLDOWNS AND REQUIRED POSTS PER 8/S-M1.2 AND 9/S-M1.2 . SEE PLANS FOR OTHER REQUIREMENTS.
7. EDGE NAIL WALL SHEATHING TO STUDS OR POSTS WITH HOLDOWNS.
8. PORTIONS OF INTERIOR WALL SURFACES ADJACENT TO SPECIFIED SHEAR WALLS SHALL BE SHEATHED FOR THE FULL, UNINTERRUPTED LENGTH TO MATCH EXTERIOR WALLS OR WITH GYPSUM BOARD OF THE SAME THICKNESS TO PROVIDE AN EVEN WALL SURFACE FOR FINISH MATERIALS.
9. SHEAR WALLS MORE THAN ONE VERTICAL PANEL IN HEIGHT SHALL HAVE STAGGERED HORIZONTAL OR VERTICAL SPLICE JOINTS.
10. ANCHOR BOLTS (AB) FOR SHEAR WALLS SHALL INCLUDE STEEL PLATE WASHERS, A MINIMUM OF 0.229 INCH BY 3 INCHES SQUARE IN SIZE, BETWEEN THE SILL PLATE AND NUT. THE HOLE IN THE PLATE WASHER IS PERMITTED TO BE DIAGONALLY SLOTTED WITH A WIDTH OF UP TO 3/16" LARGER THAN THE AB DIAMETER AND A SLOT LENGTH NOT TO EXCEED 1¾", PROVIDED A STANDARD CUT WASHER IS PLACED BETWEEN THE PLATE WASHER AND THE NUT. PLATE WASHER TO EXTEND WITHIN ½" OF SHEAR WALL SHEATHING UNO. PROVIDE OVERSIZED PLATE WASHER OR OFFSET AB AS REQUIRED. AT DOUBLE-SIDED SHEAR WALLS, STAGGER AB AS REQUIRED. AB TO BE PLACED A MINIMUM OF 4½" AND A MAXIMUM OF 12" FROM ENDS OF ALL SILL PLATES AND AT NOTCHES IN SILL PLATES.
11. NO OPENINGS ARE ALLOWED IN SHEAR WALLS UNLESS SHOWN ON THE STRUCTURAL PLANS. OPENINGS NOTED ARE PER 6/S-M1.2 . COORDINATE ANY OPENINGS NOT SHOWN WITH THE STRUCTURAL ENGINEER.

SHEAR WALL SCHEDULE

SW	APA RATED SHEATHING	NAILING (PEN)	ANCHORAGE 5/8"Ø BOLT FDN		REMARKS
			2x SILL	3x SILL	
A	15/32" (32/16) EXP 1	10d @ 6"oc	32"oc	48"oc	
B	15/32" (32/16) EXP 1	10d @ 4"oc	24"oc	32"oc	SOLID SAWN FRMG: 3x MIN AT ALL ADJOINING PANEL EDGES
C	15/32" (32/16) EXP 1	10d @ 3"oc	16"oc	24"oc	LVL FRMG: DBL 1¾" AT LVL ADJOINING PANEL EDGES (FLAT BLKG OK AT HORIZ JOINTS). SISTER W/ 16d @ PEN SPCG STGR

G MATERIAL DATA

(INFORMATION SHOWN IS FOR STRUCTURAL DESIGN REFERENCE ONLY. SEE THE PROJECT SPECIFICATIONS FOR ALL MATERIAL SPECIFICATIONS.)

CONCRETE 28-DAY MINIMUM DESIGN STRENGTH:
F'_c = 3,000 PSI FOUNDATIONS
F'_c = 3,000 PSI INTERIOR SLAB ON GRADE

REINFORCING STEEL:
ASTM A615 GRADE 60 OR A706 GRADE 60 (F_y = 60,000 PSI)

STRUCTURAL STEEL (UNO):
W SHAPES - ASTM A992 (Fy = 50,000 PSI)
ANGLES, CHANNELS, AND PLATES - ASTM A36 (Fy = 36,000 PSI)
RECTANGULAR HSS - ASTM A500 GRADE C (Fy = 50,000 PSI)
ROUND HSS - ASTM A500 GRADE C (Fy = 46,000 PSI)

FASTENERS:
MACHINE BOLTS SHALL BE ASTM A307 GRADE A
ANCHOR RODS SHALL BE ASTM F1554 GR 36 UNO
ARC-WELDING ELECTRODES SHALL BE E70

WOOD BASE DESIGN STRESSES (UNO):

SAWN LUMBER MEMBER	SPECIES AND MINIMUM GRADE, UNO	F_b (PSI)	F_v (PSI)	E (PSI)
6x POSTS	DOUGLAS FIR - #1	1200	170	$1.6x10^6$
6x BEAMS	DOUGLAS FIR - #1	1350	170	$1.6x10^6$
4x POSTS & BEAMS	DOUGLAS FIR - #1	1000	180	$1.7x10^6$
2x JOISTS, RAFTERS	DOUGLAS FIR - #1	1000	180	$1.7x10^6$
ℙ MATERIAL	DOUGLAS FIR - #1	1000	180	$1.7x10^6$
2x STUDS	DOUGLAS FIR - #1	1000	180	$1.7x10^6$

MANUFACTURED WOOD PRODUCTS:
LVL (JOISTS) F_b = 2,600 PSI E = $2.0x10^6$ PSI
LSL (BLOCKING, LEDGERS) F_b = 1,700 PSI E = $1.3x10^6$ PSI
PSL (BEAMS, JOISTS) F_b = 2,900 PSI E = $2.2x10^6$ PSI
PSL (POSTS) F_c = 2,500 PSI (PARALLEL) E = $1.8x10^6$ PSI

FOR METAL CONNECTOR DESIGNATION REFER TO SIMPSON STRONG-TIE PER SPECIFICATIONS.

C:\revit_local\20315_FREEDOM_S20C_kylec@zfa.com.rvt

4/27/2021 11:13:19 AM

D WOOD FRAMING NOTES

1. HEADERS, BEAMS, POSTS, TOP PLATE SPLICES, AND ETC., ARE PER 1/S-M1.2 AND 3/S-M1.2 WHERE NOT NOTED ON PLAN AND DETAILS. WALLS AT SEISMIC SEPARATIONS SHALL BE CONSIDERED EXTERIOR WALLS.
2. ALL BEAMS AND JOISTS SHALL BE SEAT CUT FOR FULL UNIFORM BEARING AT SUPPORTS, INCLUDING BEAM SEATS AND COLUMN CAPS.
3. SEE 11/S-M1.2 FOR SHEATHING NAILING REQUIREMENTS. ALL NAILING NOT NOTED OR DETAILED OTHERWISE SHALL BE PER 10/S-M1.2. NAIL LENGTH TO BE SUFFICIENT TO MEET CBC PENETRATION REQUIREMENTS. NAILS INTO PRESSURE TREATED MATERIAL SHALL BE HOT DIP GALVANIZED. NAILS AT BORATE TREATED LUMBER MAY BE CLEAR ZINC COATED. SEE SPECIFICATIONS FOR ADDITIONAL REQUIREMENTS AT EXTERIOR EXPOSURES.
4. EXTERIOR STUD WALL SHALL BE 1¾X9¼ LVL @ 16"oc AT HIGH ROOF AND 2x6 @ 16"oc AT LOW ROOF UNLESS NOTED OTHERWISE. INTERIOR BEARING WALLS AND SHEAR WALLS SHALL BE 2x6 @ 16"oc UNLESS NOTED OTHERWISE. SEE ARCHITECTURAL DRAWINGS FOR OTHER INTERIOR WALL FRAMING SIZES. COORDINATE STUD AND PLATE SIZES WITH THE REQUIREMENTS OF THE SHEAR WALL SCHEDULE.
5. WOOD POST SIZES ARE TO MATCH BEAM AND STUD WIDTH, UNO. WHERE POST OCCURS ABOVE RAISED FLOOR, PROVIDE SOLID BLOCKING AT FLOOR FRAMING TO MATCH WIDTH OF POST. PEN PER F/S-M0.1 TO POSTS AT ALL EXTERIOR WALLS AND INTERIOR SHEAR WALLS. POSTS AT HOLDOWNS TO BE FULL HEIGHT AND PER 8/S-M1.2
6. FOR ROOF DRAINAGE, TOP OF FRAMING BETWEEN NOTED POINTS IS A STRAIGHT LINE.
7. ALL MECHANICAL SUPPLY AND RETURN OPENINGS TO BE BETWEEN FRAMING UNO.
8. HSS OR PIPE COLUMNS IN STUD WALLS ARE TO BE TRIMMED PER 6/S-M1.3 . REFER TO PLANS AND DETAILS FOR OTHER REQUIREMENTS.
9. JOISTS AND RAFTERS ARE PER PLAN, WITH "HU" HANGERS (SKEWED AND/OR SLOPED AS REQUIRED) AT FLUSH FRAMING UNO. HANGER SIZE TO BE CORRECT FULL SIZE FOR JOIST SIZE (I.E. HU210 FOR 2x10). HANGERS FOR SAWN BEAMS TO BE HUS. HANGERS FOR GLULAM BEAMS TO BE HGUS, UNO.
10. PROVIDE SOLID BLOCKING @ 8'-0"oc MAX FOR ALL 2x12 REPETITIVE FRAMING. PROVIDE SOLID BLOCKING OR SIMPSON TB X-BRIDGING @ 8'-0"oc MAX FOR ALL 1½" LSL AND 1¾" LVL REPETITIVE FRAMING WITH A DEPTH OF 11¼" OR GREATER.
11. ROUND HOLES IN STEEL PLATES TO BE 1/16" OVERSIZE. SLOTTED HOLES IN STEEL PLATES SHALL BE 1/16" WIDER THAN THE BOLT DIAMETER AND HAVE A LENGTH OF 2 TIMES THE BOLT DIAMETER. THE DIRECTION OF THE SLOTTED LENGTH IS INDICATED ON THE DETAILS (VSH OR HSH). INSTALL BOLT AT THE CENTER LINE OF THE HOLE. BOLT HOLES IN WOOD SHALL BE ROUND AND 1/32" OVERSIZE. CUT OFF BOLT THREADED END FLUSH WITH NUT WHEN REQUIRED BY FINISHES AND 1" MAXIMUM FROM NUT OTHERWISE. PROVIDE STANDARD CUT WASHERS UNDER HEAD AND NUT WHERE BOLT BEARS ON WOOD. USE PLATE OR MALLEABLE IRON WASHERS AT EXPOSED CONDITIONS OR AS INDICATED.
12. ALL BOLTED OR NAILED STRAP CONNECTIONS SHALL HAVE AN EQUAL NUMBER OF BOLTS OR NAILS EACH SIDE OF THE SPLICE JOINT. THE FIRST BOLT OR NAIL FROM EACH SIDE OF THE SPLICED OR STRAPPED MEMBER SHALL BE EQUIDISTANT FROM THE SPLICE. STRAPS USING 16d NAILS ON 2x MATERIAL TO BE INSTALLED ON THE 1½" EDGE OF THE MEMBER.
13. THE CONTRACTOR SHALL VERIFY THAT THE MOISTURE CONTENT OF ALL FRAMING LUMBER AND SHEATHING MEET THE REQUIREMENTS OF THE SPECIFICATIONS AT THE TIME OF INSTALLATION AND AT CLOSE-IN. THE CONTRACTOR SHALL PROVIDE ALLOWANCE FOR DIFFERENTIAL SHRINKAGE BETWEEN FLOORS, ETC.
14. VENTING IS REQUIRED IN ENCLOSED FRAMING AREAS, SAD. DRILL BLOCKING AND LEDGERS AND PROVIDE SKIP BLOCKING AS DETAILED.
15. SAD FOR CEILING INFO. WHERE REQUIRED PROVIDE CEILING JOISTS PER 4/S-M1.3, UNO.
16. ALL SHEATHING SHALL HAVE 1/8" GAP AT ALL EDGES AND JOINTS. TYPICAL SHEATHING:
    A. FLAT ROOF SHEATHING (SLOPE 2:12 OR LESS): 19/32" T&G APA RATED SHEATHING (40/20) EXP 1 WITH 10d @ 6"oc EDGES (PEN) AND 12"oc FIELD UNO ON PLANS. LAY PERPENDICULAR TO FRAMING MEMBERS. BLOCK EDGES WITH 3x4 LAID FLAT WHERE NOTED ON THE PLANS AND DETAILS. NO PANELS LESS THAN 24" WIDE SHALL BE USED. STAGGER SHEETS.

E STEEL NOTES

1. COORDINATE TOP OF FOOTING ELEVATIONS AS DETERMINED BY THE CONTRACTOR PER C/S0.1.
2. TOP OF STEEL ELEVATIONS ARE TO BE DETERMINED BY THE CONTRACTOR BASED ON ARCHITECTURAL DRAWINGS AND STRUCTURAL DRAWINGS.
3. WHERE INDICATED ON PLAN "C" INDICATES MIDSPAN CAMBER IN INCHES.

C FOUNDATION NOTES

1. ALLOWABLE (ASD) FOUNDATION DESIGN PRESSURES ARE:

   SHALLOW FOOTINGS:
   DEAD LOAD + LIVE LOAD = 3,000 PSF
   DEAD LOAD + LIVE LOAD + LATERAL = 4,000 PSF
2. ALL SOILS WORK SHALL BE DONE IN ACCORDANCE WITH THE SPECIFICATIONS, THE REQUIREMENTS OF THE GEOTECHNICAL REPORT NOTED BELOW AND CHAPTER 18A OF THE CBC, TITLE 24, PART 2. ALL FOUNDATIONS SHALL BEAR ON FIRM, UNDISTURBED, NATIVE SOILS OR ENGINEERED FILL AT OR EXCEEDING DEPTHS SHOWN ON THE DRAWINGS. ENGINEERED FILL TO BE COMPACTED PER GEOTECHNICAL REPORT. INCREASE FILL AND OR FOOTING DEPTH AS REQUIRED BY GEOTECHNICAL ENGINEER. ALL FOOTING EXCAVATIONS SHALL BE AS NEAT AS PRACTICABLE. MAXIMUM OVER EXCAVATION IN WIDTH SHALL BE LESS THAN 12 INCHES OR 25% OF FOOTING WIDTH, WHICH EVER IS LESS. 6 INCHES MAXIMUM PER SIDE. LARGER OVER-EXCAVATIONS IN WIDTH SHALL BE FILLED WITH ADDITIONAL REINFORCED CONCRETE AS DIRECTED BY THE ENGINEER, OR FORMWORK SHALL BE PROVIDED. OVER-EXCAVATIONS IN DEPTH MAY BE FILLED WITH LEAN CONCRETE OR COMPACTED APPROVED BACKFILL. ALL LOOSE SOILS SHALL BE REMOVED FROM EXCAVATIONS PRIOR TO PLACEMENT OF REINFORCING OR CONCRETE. ALL UNFORMED FOUNDATIONS SHALL BE EXCAVATED AND FORMED PER 17/S-M1.1. GEOTECHNICAL REPORT BY:

   GEOSPHERE CONSTRUCTION, INC.
   REPORT NO. 91-04390-PWB
   DATED: SEPTEMBER 9, 2020
3. WHERE BOTTOM OF ADJACENT FOOTINGS ARE DIFFERENT PROVIDE STEPPED FOOTING PER 5/S-M1.1 .
4. USE 5/8" DIAMETER x 12" (18" AT CURBS) ANCHOR BOLTS (AB) AT 48"oc WHERE NOT OTHERWISE NOTED. MINIMUM EMBEDMENT INTO CONCRETE IS 7" (EXCLUDING CURB) UNLESS DETAILED OTHERWISE. ANCHOR BOLTS ARE TO BE TIED IN PLACE PRIOR TO PLACEMENT OF CONCRETE. SEE SHEAR WALL SCHEDULE FOR ADDITIONAL REQUIREMENTS. MINIMUM TWO ANCHOR BOLTS PER SILL PIECE.
5. TYPICAL SLAB: 5" CONCRETE REINFORCED WITH #4 @ 16"oc EACH WAY LOCATED 1½" CLEAR FROM TOP OF SLAB OVER VAPOR RETARDER (PER SPECIFICATIONS) AND 6" MINIMUM FREE DRAINING COMPACTED ROCK PER SPECIFICATIONS ON SUBGRADE PER THE GEOTECHNICAL RECOMMENDATIONS, AND AS APPROVED BY THE GEOTECHNICAL ENGINEER. DO NOT DRIVE CONCRETE TRUCKS OR LARGE SCREED MACHINES ON VAPOR BARRIER WITHOUT ADDITIONAL BUFFER MATERIAL AND APPROVAL FROM THE STRUCTURAL ENGINEER.
6. REFER TO ARCHITECTURAL AND PLUMBING DRAWINGS FOR DEPRESSED SLABS FOR ARCHITECTURAL FLOORING OR INSERTS, SLOPED SLABS TO DRAIN AND PIPES OR CONDUITS AT SLAB. SEE 8/S-M1.1 & 9/S-M1.1 AT DEPRESSED SLAB & 7/S-M1.1 FOR PIPES AND CONDUITS.
7. PROVIDE CONTROL JOINTS PER 6/S-M1.1 (OR CONSTRUCTION/DOWEL JOINTS AT CONTRACTOR'S OPTION) AS SHOWN ON PLAN AND AS REQUIRED TO MEET A MAXIMUM SPACING IN FEET OF 3 TIMES THE SLAB DEPTH IN INCHES (FOR EXAMPLE 3x4" = 12'-0"oc MAX). PROVIDE CONSTRUCTION/DOWEL JOINTS PER 6/S-M1.1 AS SHOWN ON PLAN, BUT NOT GREATER THAN 60'-0"oc EACH WAY. INSTALL JOINTS TO DIVIDE SLAB INTO RECTANGULAR AREAS WITH LONG DIMENSION LESS THAN 1.5 x SHORT DIMENSION. INSTALL JOINTS AT FACE OF STUDS OF WALL WHERE POSSIBLE. SUBMIT JOINT LAYOUT PLAN FOR REVIEW PRIOR TO PLACEMENT.
8. TOP OF FOOTING ELEVATIONS TO BE DETERMINED BY THE CONTRACTOR BASED ON INFORMATION FROM THE CIVIL DRAWINGS, GEOTECHNICAL REPORT, LANDSCAPE, ETC.
9. EXTERIOR WALLS TO HAVE MINIMUM 6" TALL CURB. SAD FOR CURB CONFIGURATION. INTERIOR WALLS AT TOILET ROOM TO HAVE MINIMUM 6" TALL CURB, UNO.

ABBREVIATIONS

AB	ANCHOR BOLT
ABV	ABOVE
AC	AIR CONDITIONING
ADJ	ADJACENT
ADDL	ADDITIONAL
ALT	ALTERNATE
ALUM	ALUMINUM
ARCH	ARCHITECT
@	AT
BLDG	BUILDING
BLK/BLKG	BLOCK/BLOCKING
BLW	BELOW
BM	BEAM
BN	BOUNDARY NAIL
BOT	BOTTOM
BRG	BEARING
BTWN	BETWEEN
BU	BUILT-UP
BYND	BEYOND
C	AMERICAN STANDARD CHANNEL
CANT	CANTILEVER
CB	CARRIAGE BOLT
CFS	COLD FORMED STEEL
CIP	CAST IN PLACE
CGL	CERTIFIED GLUED LUMBER
CJ	CONTROL JOINT
℄	CENTERLINE
CJP	COMPLETE JOINT PENETRATION
CLG	CEILING
CLR	CLEAR
COL	COLUMN
COLL	COLLECTOR
CONC	CONCRETE
CONN	CONNECTION
CONT	CONTINUOUS
COORD	COORDINATE/ COORDINATION
CMU	CONCRETE MASONRY UNIT
CSK	COUNTERSINK
CW	CUT WASHER
DBA	DEFORMED BAR ANCHOR
DBL	DOUBLE
DCW	DEMAND CRITICAL WELD
DF	DOUGLAS FIR
DIA or Ø	DIAMETER
DIAG	DIAGONAL
DIM	DIMENSION
DJ	DOWEL JOINT
DL	DEAD LOAD
DN	DOWN
DO	DITTO
DWG	DRAWING
DWL	DOWEL
EA	EACH
EE	EACH END
EF	EACH FACE
ELEC	ELECTRICAL
ELEV	ELEVATOR/ELEVATION
EMBED	EMBEDMENT
EQ	EQUAL
EQUIP	EQUIPMENT
ES	EACH SIDE
EW	EACH WAY
EXIST or (E)	EXISTING
EXP	EXPANSION
EXT	EXTERIOR
FDN	FOUNDATION
FIN	FINISH
FG	FINISH GRADE
FLI	FERRULE LOOP INSERT
FLR	FLOOR
FN	FACE NAIL
FOC	FACE OF CONCRETE
FOM	FACE OF MASONRY
FOS	FACE OF STUD
FRMG	FRAMING
FS	FAR SIDE
FTG	FOOTING
GA	GAGE or GAUGE

GALV	GALVANIZED
GB	GRADE BEAM
GLB	GLUE LAMINATED BEAM
GR	GRADE
HD	HOLD DOWN
HDG	HOT-DIP GALVANIZED
HDR	HEADER
HGR	HANGER
HK	HOOK
HORIZ	HORIZONTAL
HS	HIGH STRENGTH
HSB	HIGH STRENGTH BOLT
HSFB	HIGH STRENGTH FRICTION BOLT
HSG	HIGH STRENGTH GROUT
HSH	HORIZONTAL SLOTTED HOLE
HSS	HOLLOW STRUCTURAL SECTION
HT	HEIGHT
ID	INSIDE DIAMETER
IJ	I SHAPED WOOD BUILT UP TRUSS
INT	INTERIOR
JST	JOIST
JT	JOINT
KP	KING POST
L	STEEL ANGLE
Lb or #	POUND(s)
LGMF	LIGHT GAGE METAL FRAMING
LGMFC	LIGHT GAGE METAL FRAMING CONTRACTOR
LL	LIVE LOAD
LLH	LONG LEG HORIZONTAL
LLV	LONG LEG VERTICAL
LOC	LOCATION
LS	LAG SCREW
LSL	LAMINATED STRAND LUMBER
LVL	LAMINATED VENEER LUMBER
MAX	MAXIMUM
MB	MACHINE BOLT
MBM	METAL BUILDING MANUFACTURER
MC	MISCELLANEOUS CHANNEL
MECH	MECHANICAL
MEZZ	MEZZANINE
MF	MOMENT FRAME
MFR	MANUFACTURER
MIN	MINIMUM
MISC	MISCELLANEOUS
MIW	MALLEABLE IRON WASHER
MTL	METAL
(N)	NEW
NIC	NOT IN CONTRACT
NO or #	NUMBER
NS	NEAR SIDE
NSG	NON-SHRINK GROUT
NTS	NOT TO SCALE
O/	OVER
oc	ON CENTER
OD	OUTSIDE DIAMETER
OH	OPPOSITE HAND
OPNG	OPENING
OPP	OPPOSITE
OVS	OVERSIZED
OW	OTHERWISE
OWT	OPEN WEB TRUSS
ℙ	PLATE or PROPERTY LINE
PA	POST ABOVE
PDP	POWDER DRIVEN PINS
PEN	PANEL EDGE NAIL
PERP	PERPENDICULAR
PES	PANEL EDGE SCREWS
PJP	PARTIAL JOINT PENETRATION
PLF	POUNDS PER LINEAR FOOT
PNL	PANEL
PSF	POUNDS PER SQUARE FOOT
PSI	POUNDS PER SQUARE INCH
PSL	PARALLEL STRAND LUMBER
PTB	PANEL TIE BAR

PTDF	PRESSURE TREATED DOUGLAS FIR
PT	POINT
R	RADIUS
RBS	REDUCED BEAM SECTION
RFTR	RAFTER
REF	REFERENCE
REINF	REINFORCING
REQD	REQUIRED
RET	RETAINING
REV	REVISION
RF	ROOF
RWD	REDWOOD
S	AMERICAN STANDARD BEAM
SAD	SEE ARCHITECTURAL DRAWINGS
SB	SOLID BLOCK
SC	SLIP CRITICAL
SCBF	SPECIAL CONCENTRIC BRACED FRAME
SCD	SEE CIVIL DRAWINGS
SCHED	SCHEDULE
SED	SEE ELECTRICAL DRAWINGS
SEOR	STRUCTURAL ENGINEER OF RECORD
SFRS	SEISMIC FORCE RESISTING SYSTEM
SHTG	SHEATHING
SIM	SIMILAR
SKYLT	SKYLIGHT
SLD	SEE LANDSCAPE DRAWINGS
SMF	SPECIAL MOMENT FRAME
SMS	SHEET METAL SCREW
SMD	SEE MECHANICAL DRAWINGS
SOG	SLAB ON GRADE
SPCG	SPACING
SPD	SEE PLUMBING DRAWINGS
SPEC	SPECIFICATION
SQ	SQUARE
SS	SELECT STRUCTURAL or STAINLESS STEEL
STGR	STAGGERED
STD	STANDARD
STIFF	STIFFENER
STL	STEEL
STRUCT	STRUCTURAL
SW	SHEAR WALL
SYM	SYMMETRICAL
T&B	TOP AND BOTTOM
T&G	TONGUE AND GROOVE
THK	THICK
THRD	THREADED
THRU	THROUGH
TL	TOTAL LOAD
TN	TOE NAIL
TOC	TOP OF CONCRETE
TOF	TOP OF FRAMING
TOM	TOP OF MASONRY
TOP	TOP OF PLYWOOD
TOS	TOP OF STEEL
TOT	TOTAL
TU	TILT UP
TYP	TYPICAL
UNO	UNLESS NOTED OTHERWISE
VERT	VERTICAL
VIF	VERIFY IN FIELD
VSH	VERTICAL SLOTTED HOLE
W	WIDE FLANGE STEEL BEAM
W/	WITH
W/O	WITHOUT
WD	WOOD
WHS	WELDED HEADED STUD
WLD	WELDED
WP	WORK POINT/WATERPROOF
WS	WOOD SCREW
WT	WEIGHT
WTS	WELDED THREADED STUD
WWR	WELDED WIRE REINFORCEMENT

A DESIGN CRITERIA

DESIGN CRITERIA:	2019 CALIFORNIA CODE OF REGULATIONS, TITLE 24, PART 2 (CBC)
ROOF LIVE LOAD:	20 PSF (REDUCIBLE)
FUTURE SOLAR:	3 PSF
RISK CATEGORY:	III
WIND DATA:	ULTIMATE WIND SPEED (3 SEC GUST) IN MPH: 99 WIND EXPOSURE: C INTERNAL WIND PRESSURE COEFFICIENT (GCPI) = ±0.18 COMPONENTS AND CLADDING DESIGN PRESSURES FOR SYSTEMS DESIGNED BY OTHERS SHALL COMPLY WITH THE "ASCE 7" DESIGN STANDARD
EARTHQUAKE DATA:	SEISMIC IMPORTANCE FACTOR, I_e: 1.25 MAPPED SPECTRAL RESPONSE ACCELERATIONS: S_S = 01.371; S_1 = 0.478 SITE CLASS: D SPECTRAL RESPONSE COEFFICIENTS: S_{DS} = 1.097; S_{D1} = 0.581 SEISMIC DESIGN CATEGORY: D SEISMIC FORCE RESISTING SYSTEM: WOOD FRAMED SHEAR WALLS RESPONSE MODIFICATION FACTOR: R = 6.5 DESIGN BASE SHEAR: 53.0k (ASD) SEISMIC RESPONSE COEFFICIENT(S), C_S = 0.211 (ULTIMATE) ANALYSIS PROCEDURE USED: EQUIVALENT LATERAL FORCE MAXIMUM ANTICIPATED STORY DRIFT = 0.015 X HEIGHT PROVIDE DEFORMATION COMPATIBILITY PER ASCE 7 SECTION 12.12.5 FOR NON-STRUCTURAL ITEMS, INCLUDING CLADDING, STAIRS, GLAZING, ETC.
SCOPE:	NEW 1-STORY STEEL TRUSS OVER WOOD-FRAMED SHEAR WALLS BUILDING W/ A WOOD FRAMED LOW ROOF OVER WOOD FRAMING

B GENERAL NOTES

1. REFER TO SHEETS S-M1.1, S-M1.2, S-M1.3 AND S-M1.4 FOR STANDARD DETAILS OF CONSTRUCTION. REFER TO THE PROJECT SPECIFICATIONS FOR MATERIALS AND METHODS.
2. BUILDING DIMENSIONS SHOWN ARE FOR GENERAL REFERENCE ONLY. SEE ARCHITECTURAL DRAWINGS (SAD) FOR ALL ACTUAL BUILDING DIMENSIONS. ANY DISCREPANCIES ARE TO BE BROUGHT TO THE ATTENTION OF THE ARCHITECT/ENGINEER SO CLARIFICATION CAN BE MADE PRIOR TO COMMENCING WORK.
3. STRUCTURAL DRAWINGS SHALL NOT BE SCALED. ALL DIMENSIONS AND FIT SHALL BE DETERMINED AND VERIFIED BY THE CONTRACTOR PRIOR TO COMMENCING WORK.
4. DETAILS NOT FULLY OR SPECIFICALLY SHOWN SHALL BE OF SAME NATURE AS OTHER SIMILAR CONDITIONS.
5. REFER TO ARCHITECTURAL DRAWINGS FOR SIDEWALK SLABS AND DIMENSIONS.
6. COORDINATION OF MECHANICAL, ELECTRICAL, PLUMBING, AND SITE UTILITY SYSTEMS WITH THE STRUCTURAL SYSTEM IS THE RESPONSIBILITY OF THE GENERAL CONTRACTOR. USE DETAILS ON SHEETS S-M1.1 THROUGH S-M1.4. AT CONDITIONS WHERE THESE DETAILS DO NOT APPEAR TO APPLY, NOTIFY THE STRUCTURAL ENGINEER PRIOR TO INSTALLATION. AT CONDITIONS WHERE FIELD MODIFICATIONS OF MECHANICAL, ELECTRICAL, PLUMBING, OR SITE UTILITIES AFFECT STRUCTURAL SYSTEMS, NOTIFY STRUCTURAL ENGINEER PRIOR TO INSTALLATION.
7. VERIFY WEIGHTS AND LOCATIONS OF MECHANICAL UNITS WITH MECHANICAL ENGINEER PRIOR TO PLACEMENT. UNITS VARYING OVER 10% IN WEIGHT SHALL BE REVIEWED BY THE STRUCTURAL ENGINEER PRIOR TO INSTALLATION (MECHANICAL WEIGHTS SHOWN ARE MAXIMUM). CONTRACTOR TO VERIFY MECHANICAL UNIT SIZES AND WEIGHTS AS INSTALLED PRIOR TO INSTALLATION OF SPECIAL FRAMING TO ENSURE CORRECT PLACEMENT UNDER CURBS, ETC. SEE 7/S-M1.3 .
8. SHORING AND BRACING DESIGN, MATERIALS AND INSTALLATION SHALL BE PROVIDED BY THE GENERAL CONTRACTOR, AND SHALL BE ADEQUATE FOR ALL LOADS. LEAVE IN PLACE AS LONG AS MAY BE REQUIRED FOR SAFETY AND UNTIL FINAL STRUCTURAL CONSTRUCTION IS COMPLETED. THE CONTRACTOR SHALL ENGAGE A LICENSED CIVIL OR STRUCTURAL ENGINEER TO PROVIDE SHORING.
9. SPECIAL INSPECTIONS ARE REQUIRED PER THE TESTING AND INSPECTION FORM, SEE SPECIFICATIONS.
10. VEHICULAR TRAFFIC, HEAVY EQUIPMENT AND MATERIAL STAGING SHALL NOT BE ALLOWED ADJACENT TO ANY RETAINING/BASEMENT WALL, NEW OR EXISTING WITHIN A HORIZONTAL DISTANCE EQUAL TO THE WALL HEIGHT MEASURED FROM THE BOTTOM OF FOOTING OR 5'-0" WHICHEVER IS GREATER, UNLESS APPROVED BY THE STRUCTURAL ENGINEER OR NOTED OTHERWISE. WITHIN THIS ZONE, ONLY HAND-OPERATED EQUIPMENT ("WHACKERS", VIBRATORY PLATES, OR PNEUMATIC COMPACTORS) SHALL BE USED TO COMPACT THE BACKFILL SOILS.
11. SITE REVIEWS BY ZFA ARE REQUIRED FOR THE FOLLOWING UNLESS DIRECTED OTHERWISE:
    - REINFORCING STEEL.
    - WOOD ROOF SHEATHING
    - WALL AND FLOOR SHEATHING

    NOTIFY ZFA AT LEAST 2 WORKING DAYS PRIOR TO COMPLETION OF WORK.
12. SUBMIT ENGINEERING OF ITEMS TO ARCHITECT/ENGINEER FOR REVIEW PRIOR TO FABRICATION. SAD AND SPECIFICATIONS FOR THE REQUIREMENTS. GENERAL CONTRACTOR SHALL REVIEW AND APPROVE DIMENSIONS AND DETAILS SHOWN ON THE SHOP DRAWINGS PRIOR TO SUBMITTAL. CONTRACTOR TO PROVIDE DRAWINGS AND CALCULATIONS PREPARED AND SIGNED BY A CALIFORNIA LICENSED CIVIL / STRUCTURAL ENGINEER FOR THE FOLLOWING ITEMS, UNLESS NOTED OTHERWISE:
    A. STORE FRONT, CURTAIN WALL, GLAZING AND SKYLIGHT SYSTEMS: INCLUDE ATTACHMENTS TO STRUCTURE. DESIGN LOADS PER CODE/SPECIFICATIONS.
    B. BASKETBALL BACKBOARDS AND CONNECTIONS TO SUPPORTING STRUCTURE.

QUATTROCCHI KWOK ARCHITECTS
Main:
636 Fifth Street, Santa Rosa, CA 95404
East Bay:
55 Harrison Street, Suite 525
Oakland, CA 94607
(707) 576-0829

ZFA STRUCTURAL ENGINEERS
1212 fourth street | suite z
santa rosa ca 95404
zfa job no. 20315
zfa.com
707.526.0992

copyright © 2020

REGISTERED PROFESSIONAL ENGINEER
CHRIS S. WARNER
No. S4613
STRUCTURAL
STATE OF CALIFORNIA

THIS DOCUMENT AND THE IDEAS INCORPORATED HEREIN, AS AN INSTRUMENT OF PROFESSIONAL SERVICE, IS THE PROPERTY OF THE ENGINEER AND IS NOT TO BE USED, IN WHOLE OR IN PART FOR ANY OTHER PROJECT WITHOUT THE PRIOR WRITTEN AUTHORIZATION OF THE ENGINEER.

FREEDOM HIGH SCHOOL

NEW AUXILIARY GYMNASIUM

1050 NEROLY RD,
OAKLEY, CA 94561

LIBERTY UNION HIGH SCHOOL DISTRICT

REVISIONS

DSA APP NO. 01-119278

ZFA NO:	20315
ENGR / PM:	KNC / DLD
DRAWING SCALE:	As indicated
PTN: 61721-78	FILE NO: 7-H4

BID DOCUMENT

APRIL 27, 2021

SHEET TITLE

GENERAL NOTES

SHEET NUMBER

S-M0.1

ADHESIVE ANCHOR IN 2500 PSI MIN CONCRETE

ADHESIVE TYPE	ANCHOR THRD ROD	ANCHOR REBAR	PILOT HOLE	MIN EMBED UNO H_{ef}	MIN EDGE DISTANCE C_{min}	MIN SPCG S_{min}	MIN CONC DEPTH H_{min}
SIMPSON SET-XP (ICC-ESR 2508)	⅜"ø	#3	½"ø	3"	1¾"	3"	H_{ef} + 2½"
	½"ø	#4	⅝"ø	4"	1¾"	3"	H_{ef} + 3⅛"
	⅝"ø	#5	¾"ø	5"	1¾"	3"	H_{ef} + 3¾"
	¾"ø	#6	⅞"ø	6"	1¾"	3"	H_{ef} + 4⅜"
	⅞"ø	#7	1"ø	7"	1¾"	3"	H_{ef} + 4"
HILTI HIT-HY 200R (ICC-ESR 3187)	⅜"ø	N/A	7⁄16"ø	3"	1¾"	1⅞"	H_{ef} + 1¼"
	N/A	#3	½"ø	3"	1¾"	1⅞"	
	½"ø	N/A	9⁄16"ø	4"	1¾"	2½"	
	N/A	#4	⅝"ø	4"	1¾"	2½"	
	⅝"ø	#5	¾"ø	5"	1¾"	3⅛"	H_{ef} + 1½"
	¾"ø	#6	⅞"ø	6"	1¾"	3¾"	H_{ef} + 1¾"
	⅞"ø	#7	1"ø	7"	1¾"	4⅜"	H_{ef} + 2"

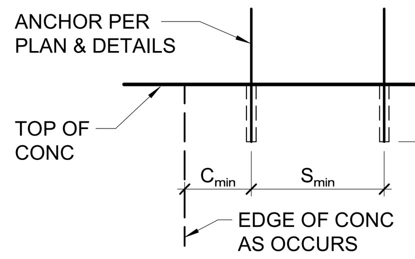

NOTES:

1. INSTALL ADHESIVE ANCHORS PER MANUFACTURER'S INFORMATION AND ICC REPORT.
2. CONTRACTOR TO VERIFY MINIMUM EDGE DISTANCES, SPACING, AND THICKNESS ARE IN ACCORDANCE W/ SCHEDULE PRIOR TO INSTALLING ANCHOR.
3. HOLES TO BE DRILLED W/ ROTARY DRILL ONLY. WHEN DRILLING HOLES IN EXISTING CONCRETE, USE CARE AND CAUTION TO AVOID CUTTING OR DAMAGING THE EXISTING REINFORCING BARS. MAINTAIN A REASONABLE CLEARANCE BETWEEN REINFORCEMENT AND THE DRILLED-IN ANCHOR. FILL ABANDONED HOLES W/ HIGH STRENGTH GROUT.
4. SPECIAL INSPECTION IS REQUIRED PER SECTION 1705A AND THE REQUIREMENTS OF THE ICC REPORTS. THE SPECIAL INSPECTOR SHALL PERFORM PERIODIC/CONTINUOUS INSPECTION IN ACCORDANCE WITH TABLE 1705A.3. THE SPECIAL INSPECTOR SHALL INSPECT ANCHOR TYPE, ANCHOR DIMENSIONS, HOLE CLEANLINESS, EMBEDMENT DEPTH, CONCRETE TYPE, CONCRETE COMPRESSIVE STRENGTH, DRILL BIT DIAMETER, HOLE DEPTH, EDGE DISTANCE(S), ANCHOR SPACING(S), CONCRETE THICKNESS, AND ADHESIVE INJECTION. TEST ANCHORS IN ACCORDANCE W/ CBC SECTION 1910A.5. SEE DRAWINGS FOR SPECIFIC TENSION TEST LOADS FOR ANCHORS.

16 ADHESIVE ANCHOR IN CONCRETE
3/4" = 1'-0"

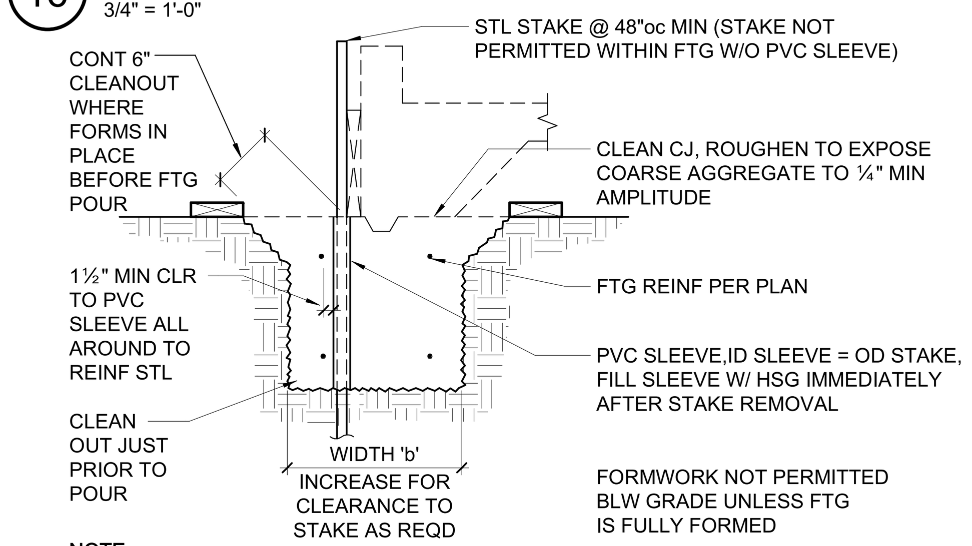

NOTE:
FOUNDATION CONCRETE MAY BE PLACED DIRECTLY INTO NEAT EXCAVATIONS PROVIDED THE FOUNDATION TRENCH WALLS ARE STABLE AS DETERMINED BY THE GEOTECHNICAL ENGINEER SUBJECT TO THE APPROVAL OF THE AUTHORITY HAVING JURISDICTION.

17 FORMWORK STAKES AT FOOTING
3/4" = 1'-0"

CARBON STL EXPANSION ANCHORS IN 2500 PSI MIN CONC

ANCHOR TYPE	ANCHOR & PILOT HOLE DIA	MIN NOMINAL EMBED H_{nom}	MIN EDGE DISTANCE C_{min}	MIN SPCG S_{min}	MIN CONC THICKNESS H_{min}	INSTALL TORQUE (FT-LB)
SIMPSON STRONG-BOLT 2 (ICC-ESR 3037)	⅜"	1⅞"	6"	3"	3¼"	30
	½"	2¾"	6"	6"	4"	60
	⅝"	3⅜"	6½"	5"	5½"	90
	¾"	4⅛"	6½"	8"	6¾"	150
HILTI KWIK BOLT TZ (ICC-ESR 1917)	⅜"	2 5⁄16"	2½"	5"	4"	25
	½"	2⅜"	2¾"	5¾"	4"	40
	⅝"	3 9⁄16"	3⅝"	6⅛"	5"	60
	¾"	4 5⁄16"	4¾"	10½"	6"	110

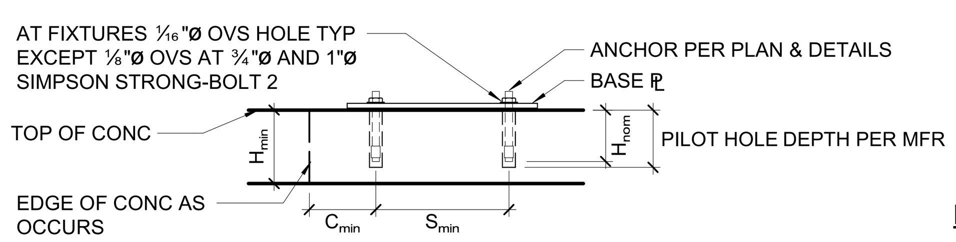

NOTES:

1. INSTALL EXPANSION ANCHORS PER MANUFACTURER'S INFORMATION AND ICC REPORT INSTRUCTIONS. SPECIAL INSPECTION IS REQUIRED PER SECTION 1705A AND THE REQUIREMENTS OF THE ICC REPORTS.
2. CONTRACTOR TO VERIFY MINIMUM EDGE DISTANCES, SPACING AND THICKNESS ARE IN ACCORDANCE W/ SCHEDULE PRIOR TO INSTALLING ANCHOR.
3. WHEN INSTALLING DRILLED-IN ANCHORS IN EXISTING REINFORCED CONCRETE, USE CARE AND CAUTION TO AVOID CUTTING OR DAMAGING THE EXISTING REINFORCING BARS. MAINTAIN A REASONABLE CLEARANCE BETWEEN REINFORCEMENT AND THE DRILLED-IN ANCHOR. FILL ABANDONED HOLES W/ HIGH STRENGTH GROUT.
4. THE SPECIAL INSPECTOR SHALL PERFORM PERIODIC/CONTINUOUS INSPECTION IN ACCORDANCE WITH TABLE 1705.3. THE SPECIAL INSPECTOR SHALL INSPECT ANCHOR TYPE, ANCHOR DIMENSIONS, HOLE CLEANLINESS, EMBEDMENT DEPTH, CONCRETE TYPE, CONCRETE COMPRESSIVE STRENGTH, DRILL BIT DIAMETER, HOLE DEPTH, EDGE DISTANCE(S), ANCHOR SPACING(S), CONCRETE THICKNESS, AND TIGHTENING TORQUE.
5. TEST ANCHORS IN ACCORDANCE W/ CBC SECTION 1910A.5. DSA/OSHPD

18 EXPANSION ANCHOR IN CONCRETE
3/4" = 1'-0"   FOR STAINLESS STEEL VERSION USE 30-01-02A

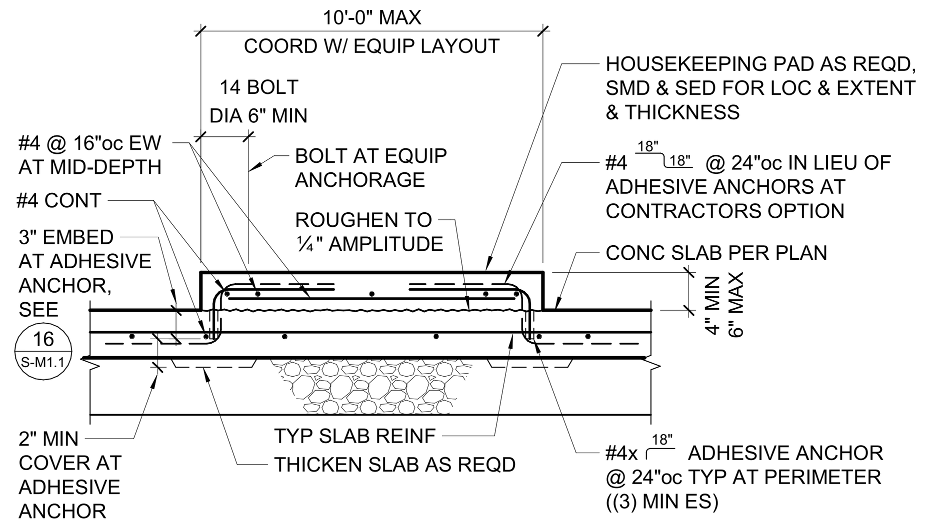

12 TYPICAL HOUSEKEEPING PAD AT SLAB ON GRADE
3/4" = 1'-0"

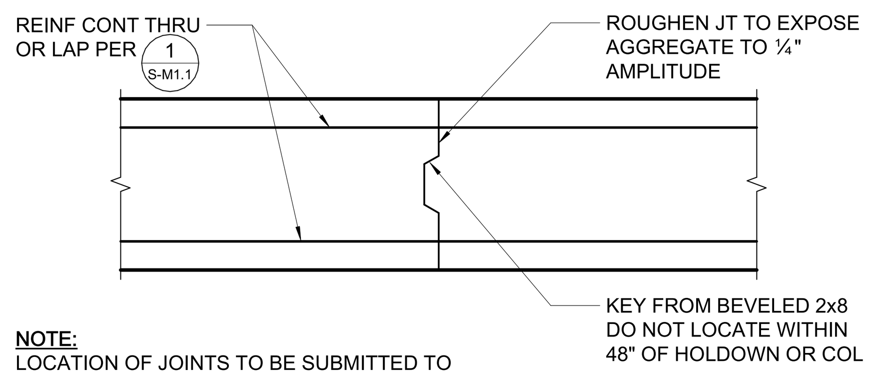

NOTE:
LOCATION OF JOINTS TO BE SUBMITTED TO ARCHITECT/ENGINEER FOR REVIEW PRIOR TO PLACEMENT OF CONCRETE

13 FOOTING CONSTRUCTION JOINT
3/4" = 1'-0"

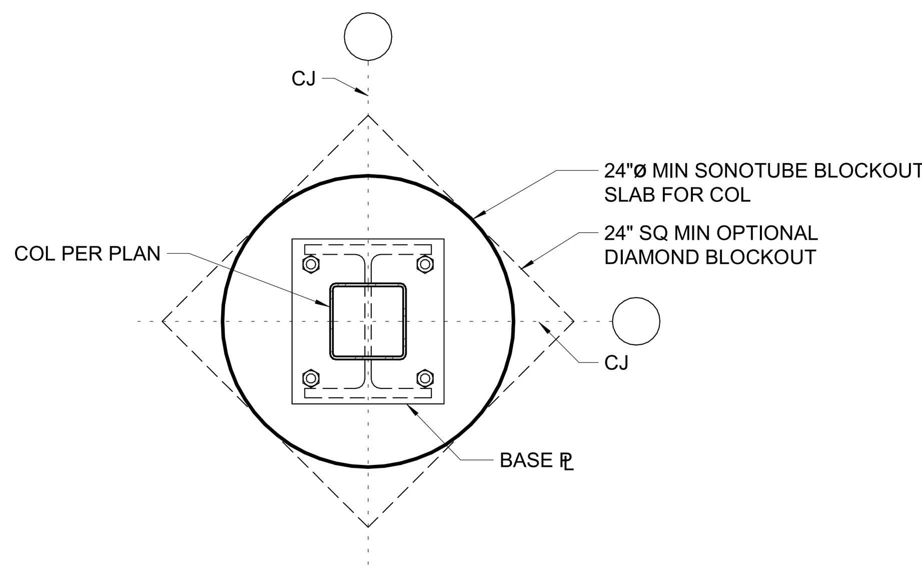

14 SLAB BLOCKOUT
1" = 1'-0"

SCREW ANCHOR IN 2500 PSI MIN CONCRETE

ANCHOR TYPE	ANCHOR AND PILOT HOLE DIA	MINIMUM EMBEDMENT H_{nom}	MINIMUM EDGE DIST C_{min}	MINIMUM SPCG S_{min}	MINIMUM CONCRETE THICKNESS H_{min}	MIMIMUM INSTALL TORQUE (FT-LB)	MAXIMUM INSTALL TORQUE (FT-LB)
SIMPSON TITEN HD (ICC-ESR 2713)	¼"	1⅝"	1½"	1½"	3¼"	10	24
	⅜"	2½"	1¾"	3"	4"	10	50
	½"	3¼"	1¾"	3"	5"	10	65
	⅝"	4"	1¾"	3"	6"	10	100
	¾"	5½"	1¾"	3"	8¾"	20	150
HILTI KH-EZ (ICC-ESR 3027)	¼"	1⅝"	1½"	1½"	3¼"	10	18
	⅜"	2½"	1½"	3"	4"	10	40
	½"	3"	1¾"	3"	4¾"	10	45
	⅝"	3¼"	1¾"	4"	5"	10	85
	¾"	4"	1¾"	4"	6"	20	95

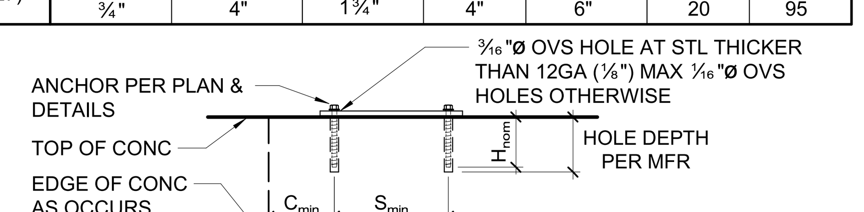

NOTES:

1. INSTALL SCREW ANCHORS PER MANUFACTURER'S INFORMATION AND ICC REPORT INSTRUCTIONS. SPECIAL INSPECTION IS REQUIRED PER SECTION 1705A OF THE CBC AND THE REQUIREMENTS OF THE ICC REPORTS. INSTALLED ANCHORS SHALL BRING CONNECTED PLIES INTO FIRM CONTACT, MEETING THE INSTALL TORQUE BUT NOT EXCEEDING THE MAXIMUM INSTALL TORQUE.
2. CONTRACTOR TO VERIFY MINIMUM EDGE DISTANCES, SPACING AND THICKNESS ARE IN ACCORDANCE W/ SCHEDULE PRIOR TO INSTALLING ANCHOR.
3. HOLES TO BE DRILLED W/ ROTARY DRILL ONLY. WHEN INSTALLING DRILLED-IN ANCHORS IN EXISTING REINFORCED CONCRETE, USE CARE AND CAUTION TO AVOID CUTTING OR DAMAGING THE EXISTING REINFORCING BARS. MAINTAIN A REASONABLE CLEARANCE BETWEEN REINFORCEMENT AND THE DRILLED-IN ANCHOR. FILL ABANDONED HOLES W/ HIGH STRENGTH GROUT.
4. THE SPECIAL INSPECTOR SHALL PERFORM PERIODIC/CONTINUOUS INSPECTION IN ACCORDANCE WITH TABLE 1705A.3. THE SPECIAL INSPECTOR SHALL INSPECT ANCHOR TYPE, ANCHOR DIMENSIONS, HOLE CLEANLINESS, EMBEDMENT DEPTH, CONCRETE TYPE, CONCRETE COMPRESSIVE STRENGTH, DRILL BIT DIAMETER, HOLE DEPTH, EDGE DISTANCE(S), ANCHOR SPACING(S), CONCRETE THICKNESS, AND TIGHTENING TORQUE.
5. TEST ANCHORS IN ACCORDANCE W/ CBC SECTION 1910A.5.

15 SCREW ANCHOR IN CONCRETE
3/4" = 1'-0"

NOTES:
1. LOCATION OF PIPE/CONDUIT BY OTHERS.
2. PROVIDE SLEEVE AT PIPE PER 2 S-M1.1 SIM.

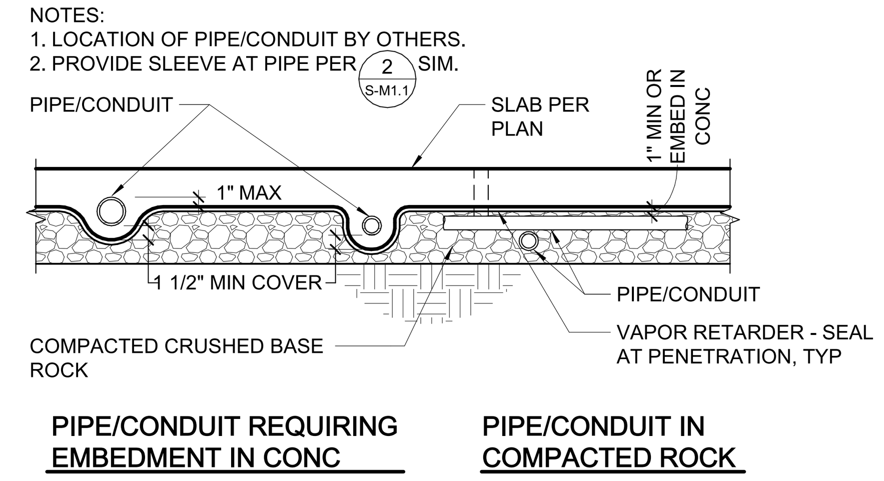

PIPE/CONDUIT REQUIRING EMBEDMENT IN CONC   **PIPE/CONDUIT IN COMPACTED ROCK**

7 CONDUIT & PIPE AT SLAB ON GRADE
3/4" = 1'-0"

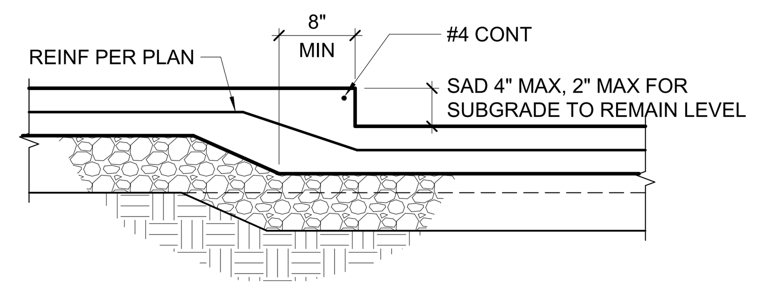

8 DEPRESSED SLAB - 4" MAX
3/4" = 1'-0"

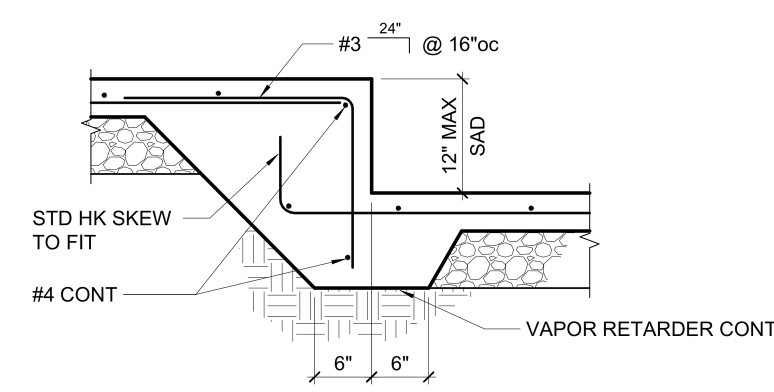

9 DEPRESSED SLAB - 12" MAX
3/4" = 1'-0"

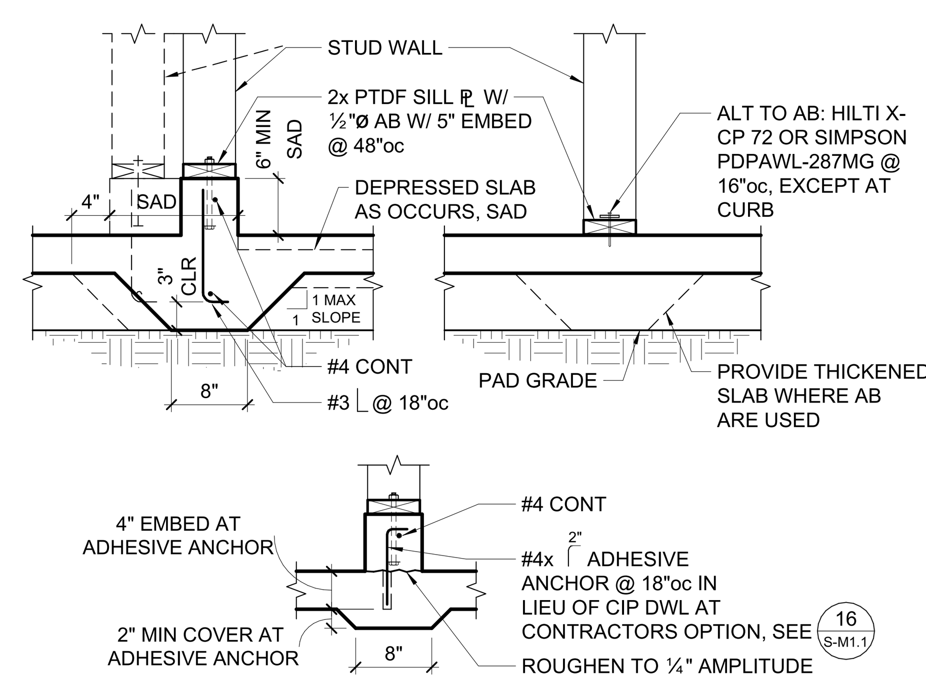

10 NON-BEARING STUD WALL AT SLAB
3/4" = 1'-0"

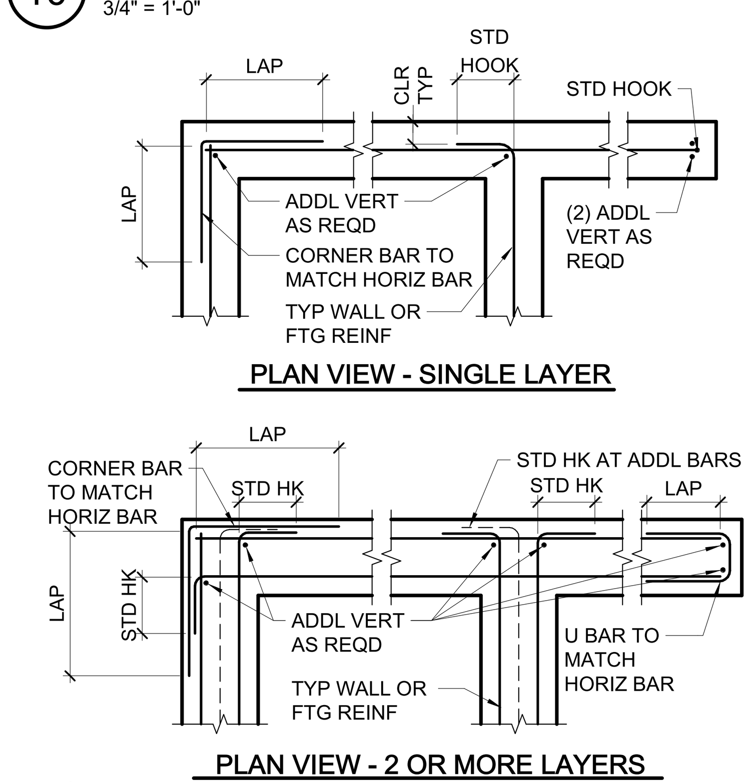

NOTE:
FOOTING REINFORCING AT CORNER AND INTERSECTION TO BE SIMILAR

11 TYPICAL CORNER, INTERSECTION AND END REINFORCING
3/4" = 1'-0"

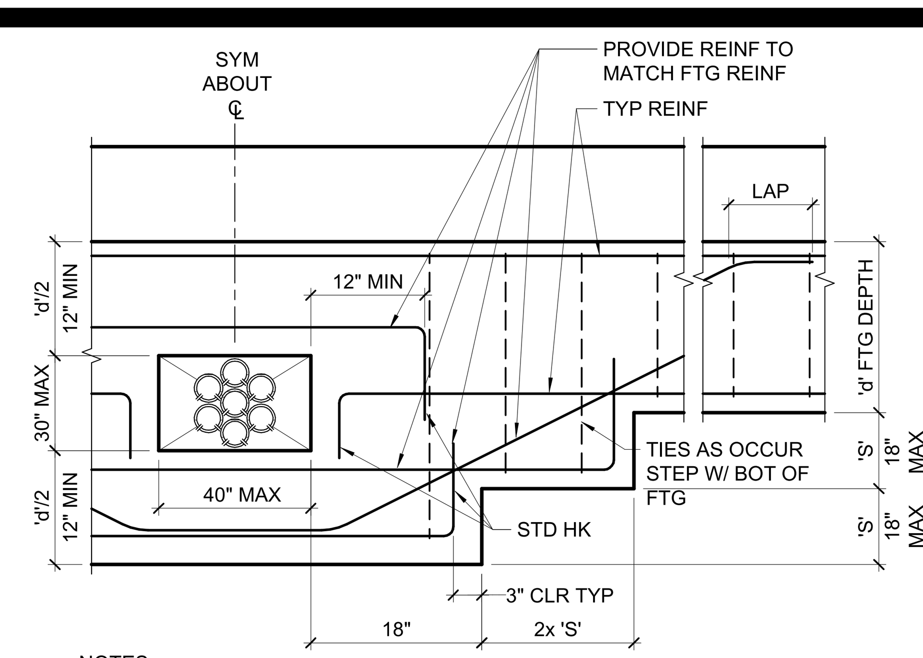

NOTES:
1. DO NOT LOCATE BLOCKOUT WITHIN 48" OF SHEAR WALL HOLD DOWN, IN FRAME FOUNDATIONS OR COLUMN PAD FOOTINGS.
2. MINIMUM DISTANCE BETWEEN BLOCKOUTS OR OTHER PIPES TO BE 48".

3 FOUNDATION BLOCKOUT
3/4" = 1'-0"

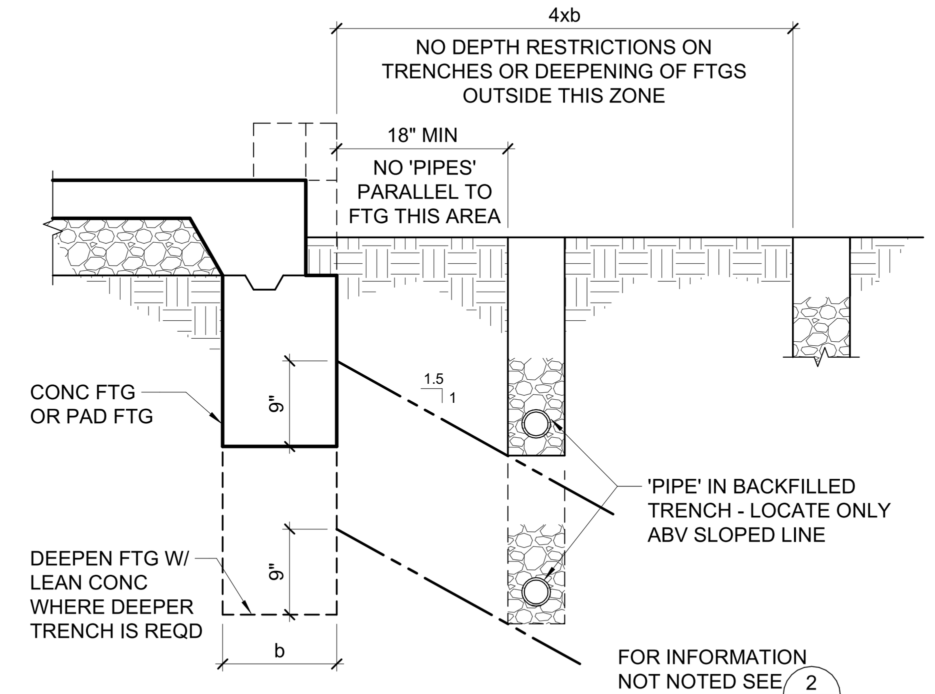

4 TRENCHING ADJACENT TO FOOTING
3/4" = 1'-0"

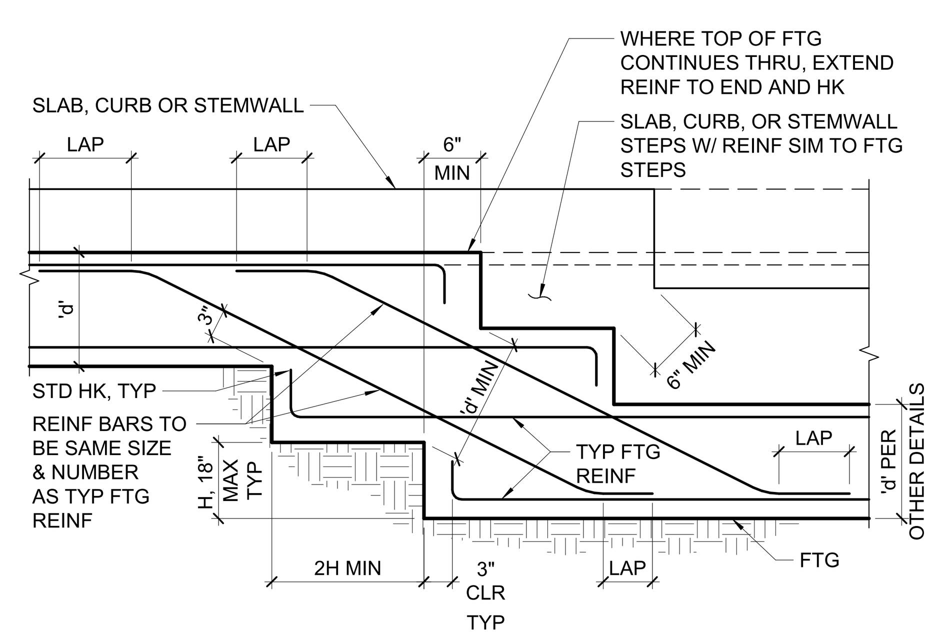

NOTE:
REMOVE ALL EARTH LOOSENED DURING EXCAVATION AND FILL W/ CONCRETE.

5 STEPPED FOOTING
3/4" = 1'-0"

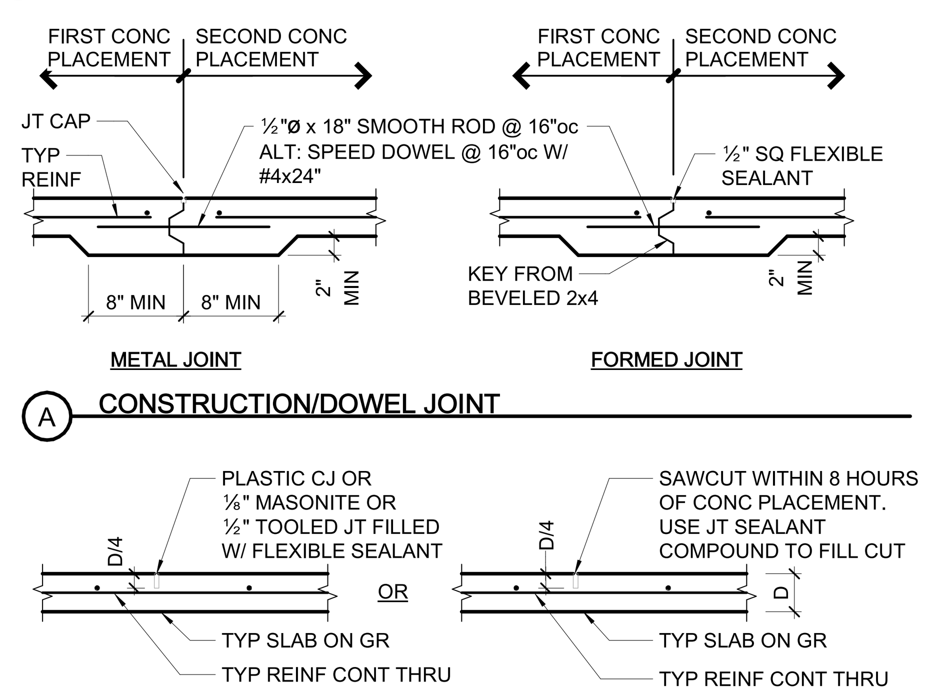

6 SLAB ON GRADE JOINTS
3/4" = 1'-0"

MINIMUM BAR LAPS FOR REINFORCING STEEL
CONCRETE STRENGTH: 3000 PSI OR GREATER - (STAGGER SPLICES)

SIZE	LAP LENGTH	SIZE	LAP LENGTH	SIZE	LAP LENGTH
#3	17"	#6	34"	#9	86"
#4	24"	#7	56"	#10	105"
#5	34"✳	#8	70"	#11	126"

(CLASS B TOP BAR)
BAR SPCG SHALL NOT BE LESS THAN 4x BAR DIA OR 4".
✳ WHERE COVER NOT LESS THAN 1½", #5 LAP LENGTH = 28"

CONC COVER FOR REINF STL - - - - 'CLR'

CAST AGAINST EARTH OR GR - - - - 3"

EXPOSED TO EARTH (FORMED) OR WEATHER
#5 & SMALLER - - - - 1½"
#6 & LARGER - - - - 2"

NOT EXPOSED TO EARTH OR WEATHER
#5 & SMALLER - - - - 1"
#6 & LARGER, & ALL BM STIRRUPS, COL TIES & SPIRALS - - - - 1½"

ALL REINF BARS SHALL EXTEND AS FAR AS POSSIBLE & END IN A STD 90° OR 180° HK UNLESS DETAILED OTHERWISE

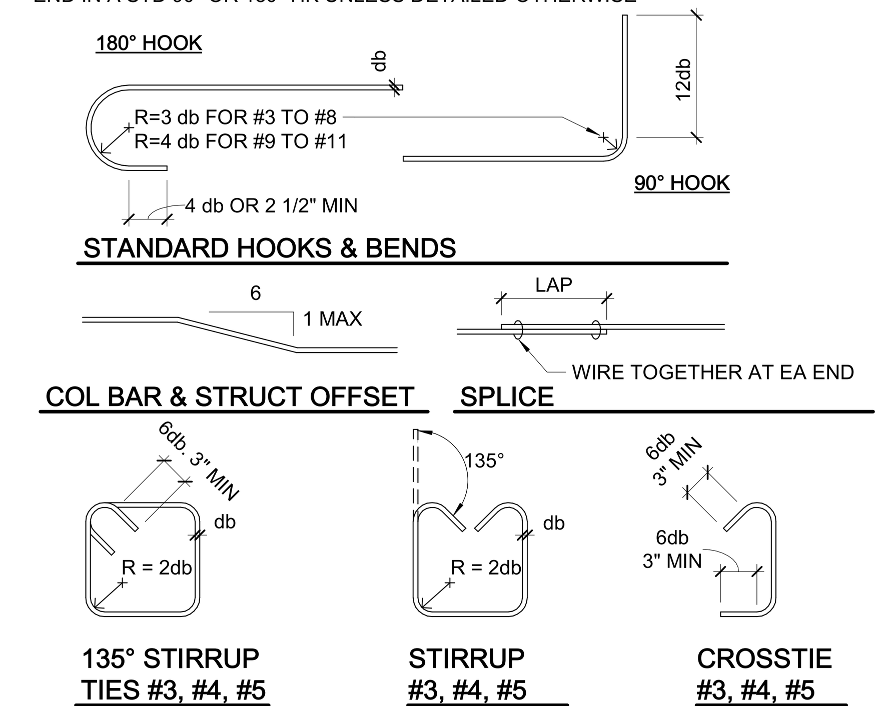

1 TYPICAL REINFORCING DETAILS (f'c = 3000psi MIN)
3/4" = 1'-0"

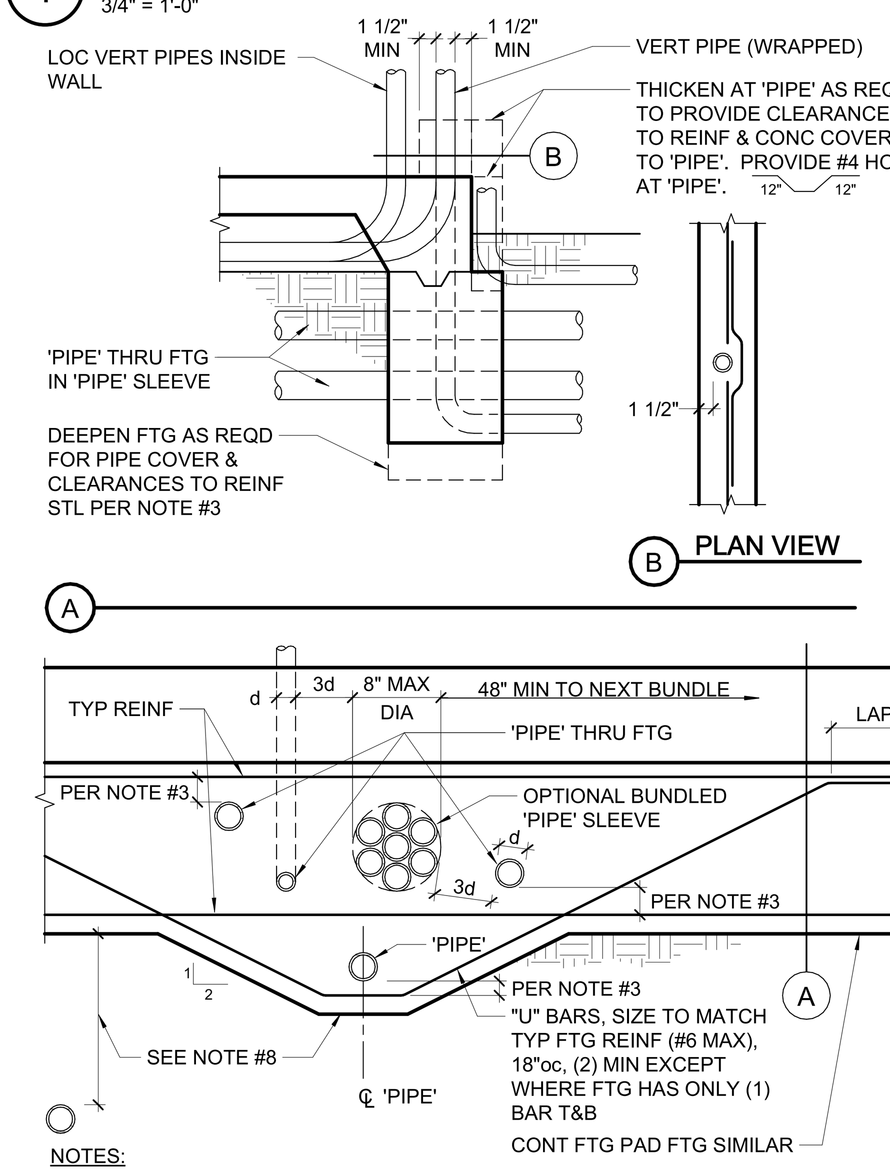

NOTES:

1. 'PIPE' = ANY PENETRATION THRU OR EMBEDDED IN FOUNDATION.
2. ALL PIPES THROUGH FOOTINGS TO BE WRAPPED OR SLEEVED AS FOLLOWS:
   a. SLEEVES: PROVIDE 1" MIN CLEAR ALL AROUND O.D. PIPE TO I.D. SLEEVE, UNO. SEAL SLEEVE ENDS W/ MASTIC OR PLASTIC BITUMINOUS CEMENT.
   b. WRAPPED VERTICAL PIPES: PROVIDE ⅛" NOMINAL SHEET FOAM W/ (3) WRAPS MINIMUM, UNO.
   c. WRAPPED HORIZONTAL PIPES: PROVIDE ⅛" NOMINAL SHEET FOAM W/ (8) WRAPS MINIMUM, UNO.
   d. UNDERGROUND FIRE LINES 4" AND LARGER:
      1. SLEEVES: PROVIDE 2" MIN CLEAR ALL AROUND O.D. PIPE TO I.D. SLEEVE. SEAL ENDS PER ABOVE.
      2. WRAPPED: PROVIDE ⅛" NOMINAL SHEET FOAM W/ (16) WRAPS MINIMUM.
3. WRAPPED AND SLEEVED PIPES SHALL HAVE 1½" MIN CLEAR TO REINF STEEL. MINIMUM CONCRETE COVER AT PIPES TO BE 3".
4. CLEARANCE BETWEEN 'PIPES' TO BE 3d MIN TYP W/ A MAXIMUM OF (8) PIPES PER 48". GROUPS OF PIPES MAY BE BUNDLED AS SHOWN, EXCEPT IN PAD FOOTINGS.
5. NO 'PIPE' TO RUN PARALLEL IN FOOTINGS, STEM OR CURB.
6. PVC CONDUIT ('PIPE') EMBEDDED IN CURB/STEM MAY BE WIRE TIED TO HORIZONTAL REINF.
7. NO HORIZONTAL PIPES ALLOWED THROUGH FOOTING WITHIN 2'-0" EACH SIDE OF HOLDOWNS OR STEEL COLUMNS. NO VERTICAL PIPES ALLOWED IN FOOTINGS AT BRACED FRAMES.
8. PROVIDE 18" MIN OF COMPACTED FILL ABOVE PIPES UP TO 12"ø, FOR LARGER PIPES INCREASE COMPACTED FILL DEPTH 1'-0" FOR EACH 6" INCREASE IN PIPE DIAMETER. OTHERWISE DEEPEN FOOTING AS SHOWN.

2 PIPES THRU FOOTING
3/4" = 1'-0"

QUATTROCCHI KWOK ARCHITECTS
Main:
636 Fifth Street, Santa Rosa, CA 95404
East Bay:
55 Harrison Street, Suite 525
Oakland, CA 94607
(707) 576-0829

ZFA STRUCTURAL ENGINEERS
1212 fourth street | suite z   zfa.com
santa rosa ca 95404   707.526.0992
zfa job no. 20315

copyright © 2020

REGISTERED PROFESSIONAL ENGINEER CHRIS S. WARNER No. S4613 STRUCTURAL STATE OF CALIFORNIA

THIS DOCUMENT AND THE IDEAS INCORPORATED HEREIN, AS AN INSTRUMENT OF PROFESSIONAL SERVICE, IS THE PROPERTY OF THE ENGINEER AND IS NOT TO BE USED, IN WHOLE OR IN PART FOR ANY OTHER PROJECT WITHOUT THE PRIOR WRITTEN AUTHORIZATION OF THE ENGINEER.

FREEDOM HIGH SCHOOL

NEW AUXILIARY GYMNASIUM

1050 NEROLY RD,
OAKLEY, CA 94561

LIBERTY UNION HIGH SCHOOL DISTRICT

REVISIONS

DSA APP NO. 01-119278

ZFA NO:	20315
ENGR / PM:	KNC / DLD
DRAWING SCALE:	As indicated
PTN: 61721-78	FILE NO: 7-H4

BID DOCUMENT

APRIL 27, 2021

SHEET TITLE

TYPICAL CONCRETE DETAILS

SHEET NUMBER

S-M1.1

C:\revit_local\20315_FREEDOM_S20C_kylec@zfa.com.rvt

4/27/2021 11:13:22 AM

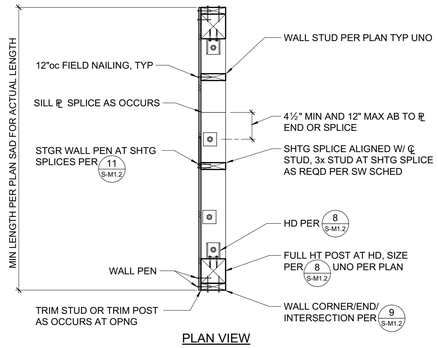

PLAN VIEW

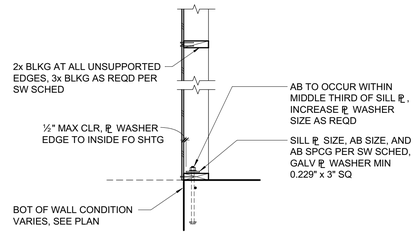

SECTION

NOTES:
1. PEN = PLYWOOD/OSB EDGE NAILING PER SW SCHED.
2. SILL ℙ AB WASHER HOLE MAY BE OVERSIZED UP TO ⅜". WASHER MAY BE DIAG SLOTTED UP TO 1¾" IN LENGTH. WHERE HOLE IS OVERSIZED OR SLOTTED, PROVIDE STD CUT WASHER.

7 SCHEMATIC SHEAR WALL CONSTRUCTION
3/4" = 1'-0"

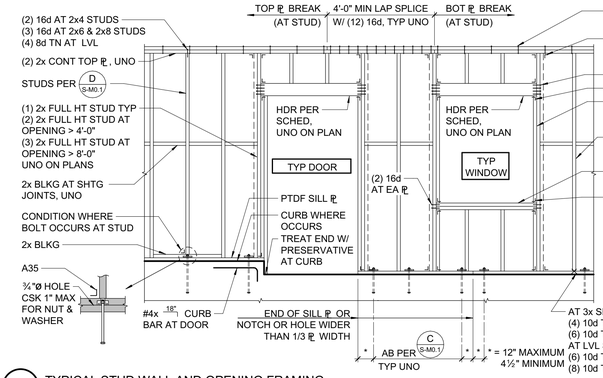

HEADER SCHEDULE		
MAX SPAN	NOMINAL HEADER	
	BRG	NON-BRG
6'-0"	4x8 OR 6x6	4x6 OR 6x6
8'-0"	4x10 OR 6x8	4x8 OR 6x6
10'-0"	4x12 OR 6x10	4x10 OR 6x8
12'-0"	6x12	4x10 OR 6x8

1. HEADERS TO MATCH WIDTH OF WALL STUDS.
2. HEADERS TO BE DF #1, MIN UNO.
3. FOR LARGER OPENINGS, SEE PLANS.
4. HEADER MAY BE USED AS LOWER TOP ℙ AS REQD BY OPENING HEIGHT.
5. AT 2x8 WALLS, USE 6x HEADER + 2x + SHIM OR 6¾" GLB + SHIM.

1 TYPICAL STUD WALL AND OPENING FRAMING
3/8" = 1'-0"

RIM JOIST TO TOP ℙ, TOE NAIL ..... 10d @ 6"oc
TRUSSES, JOISTS OR RAFTERS AT ALL BEARING POINTS
TOE NAILS EACH SIDE ..... (2) 10d
TRUSSES, JOISTS OR RAFTERS TO SIDE OF STUDS
EIGHT (8) INCH JOISTS OR LESS ..... (3) 16d
FOR EACH ADDITIONAL 4 INCHES OF DEPTH OF JOIST ..... (1) 16d
BLOCKING BETWEEN JOISTS OR RAFTERS:
TO JOIST OR RAFTERS - TOE NAILS EA SIDE, EA END ..... (2) 10d
TO JOIST OR RAFTER BEARINGS - TOE NAILS EA SIDE ..... (2) 10d
BLOCKING BETWEEN STUDS, EACH END TOE NAILS ..... (2) 10d OR (2) 16d
BRIDGING TO JOIST, TOE NAIL EACH END ..... (2) 8d
2" SUBFLOOR TO JOIST OR GIRDER, BLIND & FACE NAIL ..... (2) 16d
SOLE PLATE TO JOIST OR BLOCKING, FACE NAIL ..... 16d @ 16"oc
SOLE PLATE TO JOIST OR BLOCKING AT
BRACED WALL PANELS ..... (3) 16d @ 16"oc
TOP PLATE TO STUD, END NAIL ..... (2) 16d
STUD TO SOLE PLATE, TOE NAIL ..... (4) 8d
DOUBLE STUDS AT EXTERIOR WALLS, FACE NAIL ..... 16d @ 12"oc
DOUBLE STUDS, FACE NAIL ..... 16d @ 24"oc
DOUBLE TOP PLATES, FACE NAIL ..... 16d @ 12"oc
TOP PLATES, LAPS & INTERSECTIONS, FACE NAIL ..... (3) 16d
CONTINUOUS HEADER, TWO PIECES ..... 16d @ 16"oc ALONG EACH EDGE
DOUBLE TOP PLATE LAP AT CORNER ..... (3) 16d
CONTINUOUS HEADER TO STUD, TOE NAIL ..... (4) 8d
CEILING JOISTS, LAPS OVER PARTITIONS, FACE NAIL ..... (3) 16d
CEILING JOISTS TO PARALLEL RAFTERS, FACE NAIL ..... (3) 16d
BUILT-UP CORNER STUDS ..... 16d @ 12"oc
POST TO SILL/SOLE/TOP PLATE, EACH SIDE TOE NAIL ..... (4) 10d

10 NAILING SCHEDULE
3/4" = 1'-0"

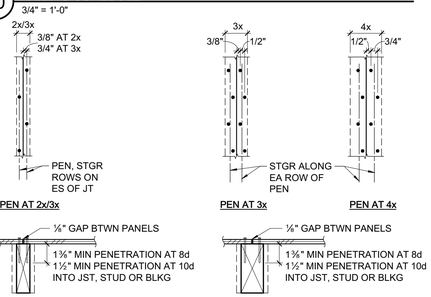

NOTE:
SHEATHING SHEETS ARE TO BE AS LARGE AS POSSIBLE. STAGGER SHEETS. JOINTS ARE TO BE CENTERED OVER BEARING. NAIL HEADS SHALL BE DRIVEN FLUSH W/ SHEATHING. MINIMUM SHEATHING SIZE IS 24" WIDTH x 48" LENGTH AT FLOOR AND ROOF, AND 12"x48" AT WALLS.

11 SHEATHING NAILING
1 1/2" = 1'-0"

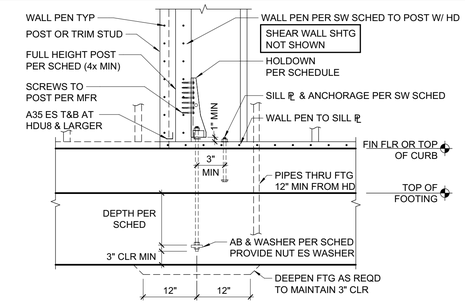

HOLDOWN	AB OR THRD ROD	WASHER AT AB	DEPTH	MIN FTG WIDTH	MIN POST SIZE UNO ON PLANS
HDU2	⅝"ø	¼"x2½" SQ	12"	12"	4x
HDU4	⅝"ø	¼"x2½" SQ	12"	12"	4x
HDU5	⅝"ø	¼"x2½" SQ	12"	12"	4x
HDU8	⅞"ø	⅝"x3" SQ	15"	18"	6x6
HDU11	1"ø	⅜"x3½" SQ	15"	18"	6x6
HDU14*	1"ø	⅜"x3½" SQ	21"	24"	6x6

*NUTS AT ANCHOR ROD TO BE HEAVY HEX

8 TYPICAL HOLDOWN
3/4" = 1'-0"

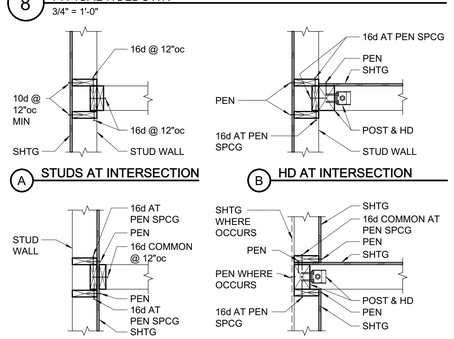

9 TYPICAL PLAN VIEW OF STUD WALL INTERSECTIONS
3/4" = 1'-0"

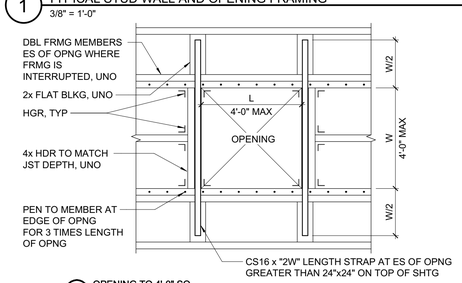

A OPENING TO 4'-0" SQ

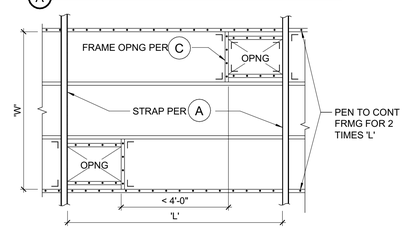

B CLOSELY SPACED OPENINGS BETWEEN FRAMING

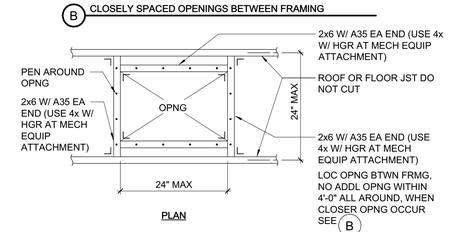

C ISOLATED OPENING BETWEEN FRAMING UP TO 24"

5 OPENING IN DIAPHRAGM
3/4" = 1'-0"

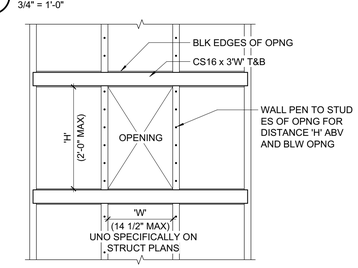

NOTES:
1. OPENINGS < 6" SQ DO NOT REQUIRE BLOCKING AND STRAPPING.
2. NO ADDITIONAL OPENINGS WITHIN 4'-0" ALL AROUND.
3. NO OPENINGS PERMITTED IN SHEAR WALL (C) OR HIGHER OR IN SHEAR WALLS LESS THAN 10'-0" LONG UNLESS SPECIFICALLY DETAILED ON STRUCTURAL PLANS. CONTACT STRUCTURAL ENGINEER FOR ASSISTANCE.
4. FRAME OPENINGS PER 1/S-M1.2 WHERE STUDS ARE INTERRUPTED.

6 SMALL OPENINGS IN SHEAR WALLS
3/4" = 1'-0"

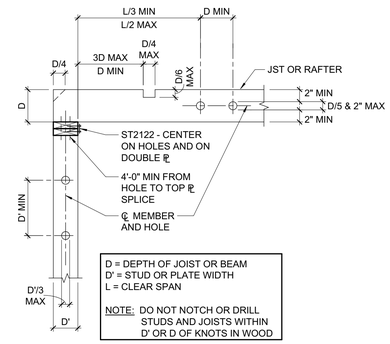

2 HOLES AND NOTCHES IN WOOD STUDS, JOISTS, AND PLATES
3/4" = 1'-0"

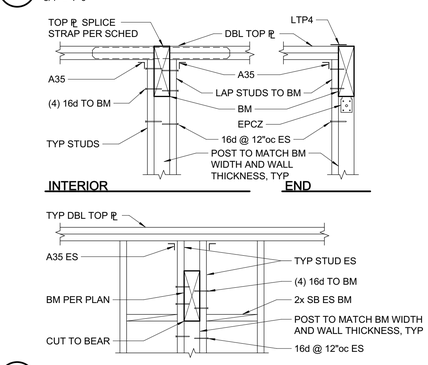

3 TYPICAL BEAM IN AND THRU STUD WALL
3/4" = 1'-0"

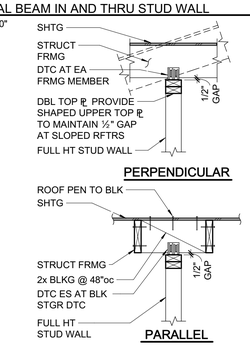

NOTE:
INSTALL SLOT NAILS AT ℄ OF SLOT W/ 1/16" GAP BTWN NAIL HEAD & CLIP

4 TYPICAL NON-STRUCTURAL STUD WALL DETAILS
3/4" = 1'-0"

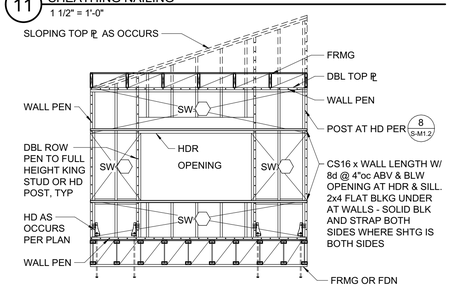

NOTE:
FRAMING SHOWN IS SCHEMATIC, SEE PLAN FOR SPECIFIC REQUIREMENTS

12 SCHEMATIC SHEAR WALL ELEVATION
1/4" = 1'-0"

C:\revit_local\20315_FREEDOM_S20C_kyle@zfa.com.rvt

4/27/2021 11:13:24 AM

QUATTROCCHI KWOK ARCHITECTS

Main:
636 Fifth Street, Santa Rosa, CA 95404
East Bay:
55 Harrison Street, Suite 525
Oakland, CA 94607
(707) 576-0829

ZFA STRUCTURAL ENGINEERS
1212 fourth street | suite z — zfa.com
santa rosa ca 95404 — 707.526.0992
zfa job no. 20315

copyright © 2020

REGISTERED PROFESSIONAL ENGINEER CHRIS S. WANGLER STRUCTURAL STATE OF CALIFORNIA

THIS DOCUMENT AND THE IDEAS INCORPORATED HEREIN, AS AN INSTRUMENT OF PROFESSIONAL SERVICE, IS THE PROPERTY OF THE ENGINEER AND IS NOT TO BE USED, IN WHOLE OR IN PART FOR ANY OTHER PROJECT WITHOUT THE PRIOR WRITTEN AUTHORIZATION OF THE ENGINEER.

FREEDOM HIGH SCHOOL

NEW AUXILIARY GYMNASIUM

1050 NEROLY RD,
OAKLEY, CA 94561

LIBERTY UNION HIGH SCHOOL DISTRICT

REVISIONS

DSA APP NO. 01-119278

ZFA NO:	20315
ENGR / PM:	KNC / DLD
DRAWING SCALE:	As indicated
PTN: 61721-78	FILE NO: 7-H4

BID DOCUMENT

APRIL 27, 2021

SHEET TITLE

TYPICAL WOOD DETAILS

SHEET NUMBER

S-M1.2

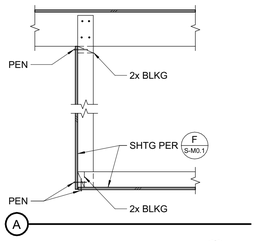

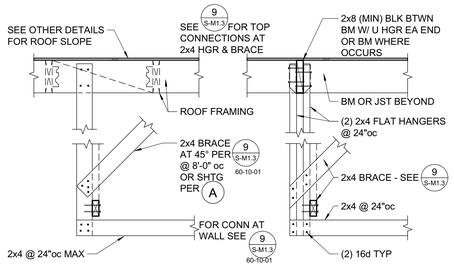

10 TYPICAL SOFFIT FRAMING
3/4" = 1'-0"

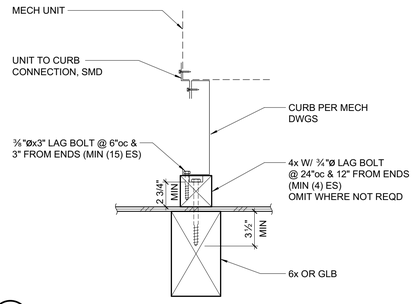

7 MECHANICAL CURB DETAIL ABOVE 6x OR GLB
1 1/2" = 1'-0"

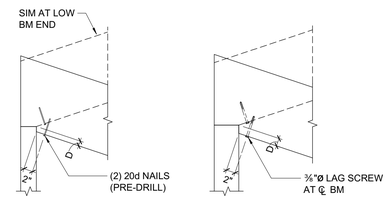

A CASE I (WHERE D IS LESS THAN OR EQUAL TO 1½")

B CASE 2 (WHERE D IS GREATER THAN 1½")

NOTES:
1. DO NOT OVERCUT NOTCHES OR SEAT CUTS.
2. D MAX = BEAM DEPTH/4 SEE OTHER DETAILS FOR ADDITIONAL NOTCH OR SEAT CUT SIZE INFORMATION.

8 BEAM SEAT CUT/NOTCH REINFORCEMENT
3/4" = 1'-0"

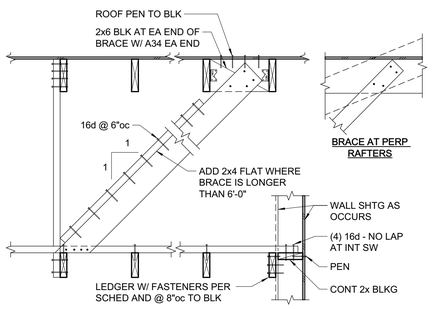

A AT END WALL OR FULL HEIGHT PARTITION

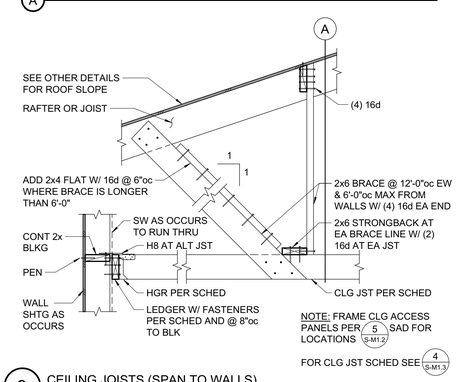

9 CEILING JOISTS (SPAN TO WALLS)
3/4" = 1'-0"

CEILING JOIST SCHEDULE			
MAX SPAN	JOIST SIZE	HANGER IF REQUIRED	LEDGER IF REQUIRED
9'-0"	2x4 @ 16"oc	LU24	2x4 W/ (2) 16d @ 16"oc
12'-6"	2x6 @ 16"oc	LU26	2x6 W/ (3) 16d @ 16"oc
14'-0"	2x8 @ 16"oc	LU28	2x8 W/ (4) 16d @ 16"oc
19'-0"	2x10 @ 16"oc	LU210	2x10 W/ (5) 16d @ 16"oc

NOTES:
1. CEILING JOIST SCHEDULE IS BASED ON LL = 10 psf.
2. WHERE LEDGERS ARE NAILED THROUGH WALL SHTG, USE 20d NAILS IN LIEU OF 16d NAILS.
3. PROVIDE MIDSPAN BLOCKING AT 2x10 JOISTS.

4 CEILING JOIST SCHEDULE
3/4" = 1'-0"

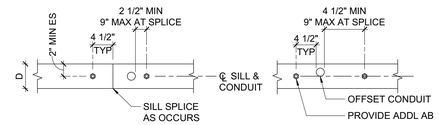

CASE 1 - SINGLE, CONDUIT DIAMETER ≤ D/3, MIN SPCG = 16"oc

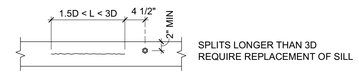

CASE 2 - SPLIT IN SILL

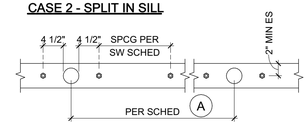

CASE 3 - SINGLE, CONDUIT DIAMETER > D/3

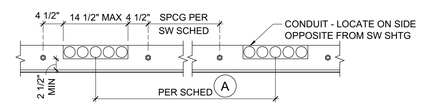

CASE 4 - NOTCH FOR CONDUIT

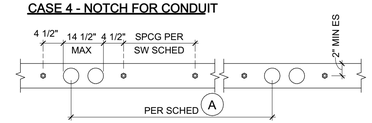

CASE 5 - MULTI CONDUIT, DIAMETER > D/3

SCHEDULE A			
	CASE 3	CASE 4	CASE 5
SW A	48"	32"	48"
SW B	64"	48"	64"
SW C	80"	64"	N/A
SW D	N/A	N/A	N/A

NOTE:
1. ALL PENETRATIONS THROUGH SHEAR WALL SILL PLATE SHALL CONFORM TO THE REQUIREMENTS OF THIS DETAIL OR BE REROUTED PRIOR TO INSTALLATION OF SILL.
2. ADDITIONAL ANCHOR BOLTS TO BE INSTALLED PER 15/S-M1.1 WHERE NECESSARY. AB DIA AS REQD BY SW SCHED.

5 HOLES IN PLATES AT SHEAR WALLS
3/4" = 1'-0"

NOTE:
1. PROVIDE BOLTS 4½" MIN & 12" MAX FROM EE OF ALL NAILERS
2. AT LVL STUDS USE 1¾ LVL AT 2x, 2½ LVL AT 3x, AND 3½ LVL AT 4X

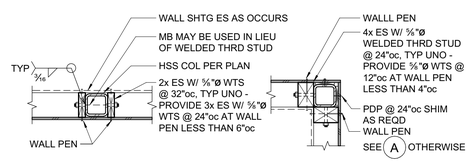

A HSS COLUMN WITHIN WALL

C HSS COLUMN AT CORNER

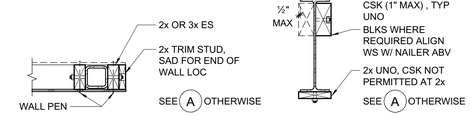

B HSS COLUMN AT END OF WALL (EDGE OF OPNG SIM)

D WIDE FLANGE NAILER (CHANNEL & HSS SIM)

6 TYPICAL STEEL BEAM/COLUMN NAILERS
3/4" = 1'-0"

TOP PLATE SPLICE SCHEDULE		
MARK	LAP SPLICE (CASE 1)	STRAP SPLICE (CASE 2)
A	(12) 16d PER 4'-0" MIN LAP	MSTC28
B	(22) 16d PER 4'-0" MIN LAP	MSTC40
C	(26) 16d PER 6'-0" MIN LAP	MSTC52
D	(32) 16d PER 6'-0" MIN LAP	MSTC66
E	(36) 16d PER 8'-0" MIN LAP	MSTC28 EA SIDE
F	(44) 16d PER 8'-0" MIN LAP	MSTC40 EA SIDE
G	(50) 16d PER 10'-0" MIN LAP	MSTC52 EA SIDE

NOTES:
1. AT LAP SPLICES, SPACE NAILS @ 3"oc MIN (MAX 12"oc). STAGGER AT 2½" GAGE.
2. USE STRAP SPLICE WHERE BM INTERSECTS TOP ℄ .
3. NAILS TO MATCH LAP SPLICE ES OF SPLICE (16d @ 12"oc MIN)
4. USE SPLICE TYPE A UNO.

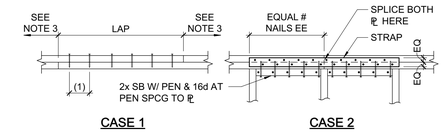

CASE 1 CASE 2

1 TOP PLATE SPLICE SCHEDULE AND DETAILS
3/4" = 1'-0"

LEDGER SPLICE SCHEDULE				
MARK	CASE	STRAP/PLATE	CASE	STRAP/PLATE
A	1	MSTA24	-	
B	1	MSTA30	-	
C	2	MSTI48	3	MSTI60
D	2	CMST14x5'-6"	3	CMST14x6'-0"
E	2	(2) MSTI48	4	℄ ¼" W/ (6) 1"ø MB ES OF SPLICE

SPLICE NOTES:
1. PROVIDE 3x OR (2) 2x STUDS AT SPLICE
2. ALL NAILS TO BE 10d NAIL ALL HOLES
3. FOR CASE 1, SPLICE W/ MSTA36 AT BM
4. USE SPLICE TYPE 'A' UNO

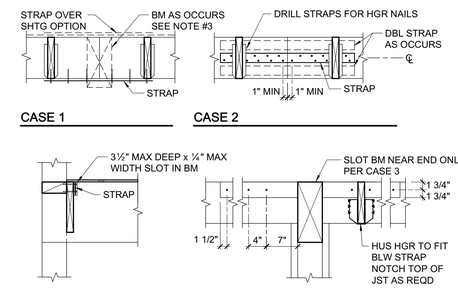

CASE 1 CASE 2

CASE 3 CASE 4

2 LEDGER OR RIM SPLICE SCHEDULE
3/4" = 1'-0"

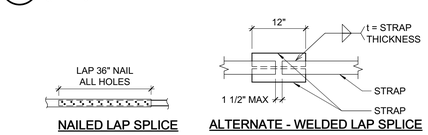

NAILED LAP SPLICE

ALTERNATE - WELDED LAP SPLICE

TIE STRAP SCHEDULE						
MARK	STRAP	MIN. NAILING ES OF ◆	MAX. NAIL SPACING (SEE NOTES #1 & #2)			MIN. END LENGTH (EL)
			CASE 1	CASE 2		
				EL	RL	
A	CS16	(10) 10d	10d @ 4"oc STGR	FILL ALL NAIL HOLES	10d @ 4"oc STGR	12"
B	CS14	(13) 10d	10d @ 4"oc STGR	FILL ALL NAIL HOLES	10d @ 4"oc STGR	16"
C	CMSTC16	(25) 10d	10d @ 3"oc STGR	FILL ALL NAIL HOLES	10d @ 3"oc STGR	24"
D	CMST14	(33) 10d	10d @ 3½"oc STGR	FILL ALL NAIL HOLES	10d @ 3½"oc STGR	32"
E	CMST12	(43) 10d	10d @ 3½"oc STGR	FILL ALL NAIL HOLES	10d @ 3½"oc STGR	48"

1. CASE 1 APPLIES UNLESS END LENGTH (EL) IS NOTED ON PLANS. WHERE END LENGTH (EL) IS NOTED, SEE CASE 2.

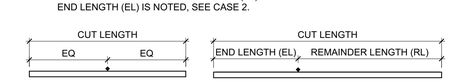

CASE 1 CASE 2

2. AS REQUIRED, PROVIDE CLOSER NAIL SPACING TO MEET MINIMUM NAILING EACH SIDE OF ◆ .
3. LOCATE STRAPS OVER SHEATHING AND BLOCK UNDER STRAP W/ FLAT 2x6 (2x4 AT CS16/CS14) WHERE NO FRAMING OCCURS, UNO.
4. SEE PLANS FOR STRAP LENGTHS, LOCATIONS AND DETAILS, UNO.
5. SPLICE STRAPS AS SHOWN WHERE LENGTH PER PLAN EXCEEDS AVAILABLE PRODUCT LENGTH

3 TIE STRAP SCHEDULE
3/4" = 1'-0"

QUATTROCCHI KWOK ARCHITECTS

Main:
636 Fifth Street, Santa Rosa, CA 95404
East Bay:
55 Harrison Street, Suite 525
Oakland, CA 94607
(707) 576-0829

ZFA STRUCTURAL ENGINEERS
1212 fourth street | suite z
santa rosa ca 95404
zfa job no. 20315
zfa.com
707.526.0992

copyright © 2020

REGISTERED PROFESSIONAL ENGINEER CHRIS S. WARNER STRUCTURAL STATE OF CALIFORNIA

THIS DOCUMENT AND THE IDEAS INCORPORATED HEREIN, AS AN INSTRUMENT OF PROFESSIONAL SERVICE, IS THE PROPERTY OF THE ENGINEER AND IS NOT TO BE USED, IN WHOLE OR IN PART FOR ANY OTHER PROJECT WITHOUT THE PRIOR WRITTEN AUTHORIZATION OF THE ENGINEER.

FREEDOM HIGH SCHOOL

NEW AUXILIARY GYMNASIUM

1050 NEROLY RD,
OAKLEY, CA 94561

LIBERTY UNION HIGH SCHOOL DISTRICT

REVISIONS

DSA APP NO. 01-119278

ZFA NO: 20315
ENGR / PM: KNC / DLD
DRAWING SCALE: As indicated
PTN: 61721-78 FILE NO: 7-H4

BID DOCUMENT

APRIL 27, 2021

SHEET TITLE

TYPICAL WOOD DETAILS

SHEET NUMBER

S-M1.3

C:\revit_local\20315_FREEDOM_S20C_kylec@zfa.com.rvt
4/27/2021 11:13:26 AM

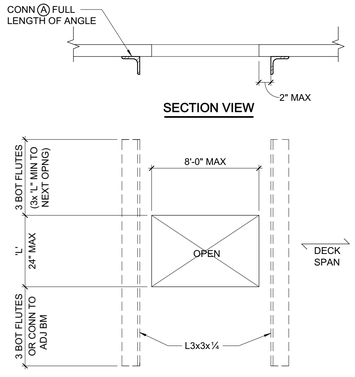

10 TYPICAL REINFORCED OPENING IN DECK (LESS THAN 24")
1" = 1'-0"

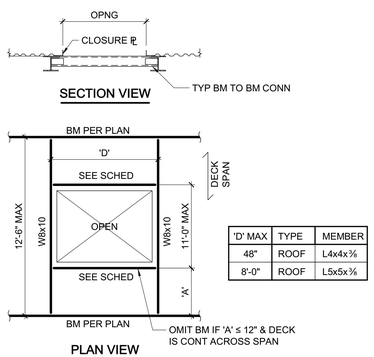

'D' MAX	TYPE	MEMBER
48"	ROOF	L4x4x¾
8'-0"	ROOF	L5x5x¾

11 TYPICAL FRAMED OPENING IN DECK (LESS THAN 11'-0")
1" = 1'-0"

D MAX	ANGLE
4"	16 GA
8"	12 GA
12"	¼"

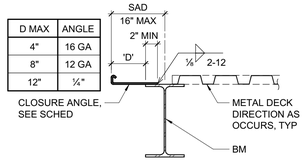

UNTOPPED DECK AT OPENING

7 TYPICAL EDGE OF DECK
1" = 1'-0"

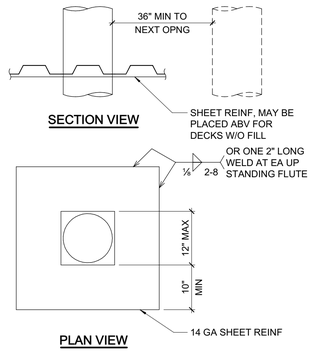

8 TYPICAL REINFORCED OPENING IN DECK (LESS THAN 12")
3/4" = 1'-0"

MARK	STEEL DECK GAGE & PROFILE TYPE SEE 5/S-M1.4	DECK CONNECTIONS						REMARKS
		END/INT BEARING CONN (A)		SIDE BEARING CONN (B)		SIDELAP CONNECTION (C)		
		SIZE & TYPE	PATTERN	SIZE & TYPE	SPACING	SIZE & TYPE	SPACING	
1	18 GA	PINS	24/3	PINS	12"	SCREWS	6"	14'-0" MAX SPAN
2	16 GA	SCREWS	36/7	SCREWS	12"	TSW	12"	RAIN CANOPY

NOTES:
1. ATTACH DECK TO ALL STEEL FRAMING AS OCCURS.
2. TSW = 1½" TOP SEAM WELD (⅛" FILLET).
3. PINS = HILTI X-ENP-19 L15 PER ICC ESR-2197 AND ESR-2776.
4. SCREWS = HILTI S-SLC01, HILTI S-SLC02, OR #12 SELF-DRILLING OR SELF-PIERCING SCREWS PER ASTM C1513. PROVIDE NEOPRENE WASHERS AT DECK EXPOSED TO RAIN.
5. ABOVE REFERENCED DECKS ARE BASED ON ALLOWABLE DESIGN LOADS PER IAPMO ER-0218 VERCO MANUFACTURING - EQUIVALENT DECK MUST HAVE EQUIVALENT ALLOWABLE VERTICAL LOADS, DIAPHRAGM SHEAR VALUES, AND FLEXIBILITY FACTORS.
6. SHORING OF DECK REQUIRED AT SINGLE SPAN & 2 SPAN CONDITIONS. NOT REQUIRED AT 3 SPAN CONDITIONS. AT CONTRACTOR'S OPTION, HEAVIER DECK MAY BE USED TO AVOID SHORING PER SEOR WRITTEN APPROVAL.

1 DECKING SCHEDULE
3/4" = 1'-0"

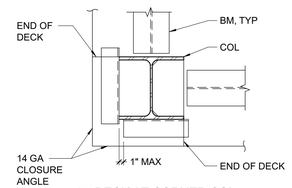

C DECK AT CORNER COL

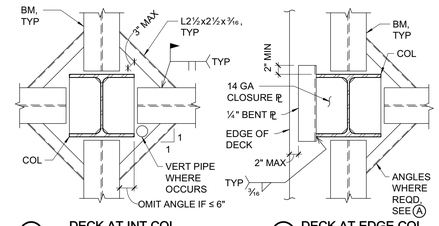

A DECK AT INT COL

B DECK AT EDGE COL

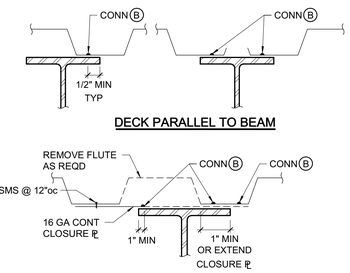

DECK PARALLEL TO BEAM

SPLIT DECK AT PARALLEL BEAM

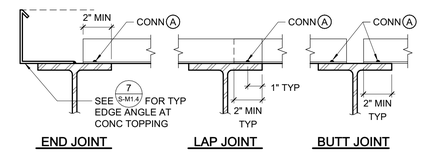

END JOINT LAP JOINT BUTT JOINT

DECK PERPENDICULAR TO BEAM

4 TYPICAL DECK SUPPORT AT COLUMN
3/4" = 1'-0"

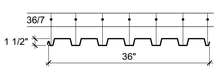

PROPERTIES
F_y=50 KSI

GAGE	I (in⁴/ft)	+S (in³/ft)	-S (in³/ft)
16 GA	0.381	0.399	0.410

TYPE 2 DECK
VERCO PLB, HSB, OR APPROVED EQUAL

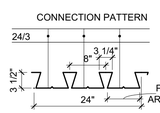

PROPERTIES
F_y=40 ksi

GAGE	I_{pn} (in⁴/ft)	I_{sn} (in⁴/ft)	S_{wn} (in³/ft)	S_{ni} (in³/ft)
18 GA	2.463	2.418	1.084	1.224

TYPE 1 DECK
VERSA-DEK 3.5LS ACOUSTIC (ICC-ES 2657) OR APPROVED EQUAL VIA REQUEST FOR SUBSTITUTION

5 DECKING TYPE AND CONNECTION PATTERN
3/4" = 1'-0"

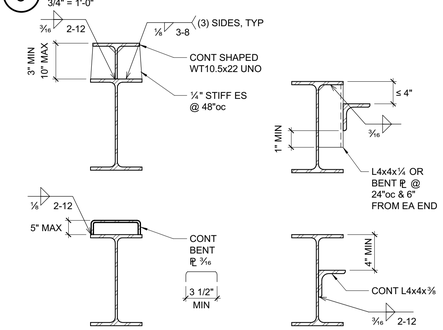

RAISED DECK DEPRESSED DECK

6 TYPICAL RAISED AND DEPRESSED DECK SUPPORT
1 1/2" = 1'-0"

A WELDING (OR OTHER DECK FASTENING)

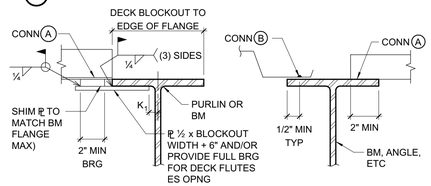

END BEARING AT BLOCKOUT (18" MAX) CHANGE IN DIRECTION

NOTES:
1. WELD OR DECK FASTENERS PER SCHEDULE. FOR DECKING SCHEDULE SEE 1/S-M1.4. AS SHOWN IN THIS DETAIL, PROVIDE ARC SEAM WELD "⌓" AT SAME SPACING AS ARC SPOT WELD "◯" PER 1/S-M1.4

2 TYPICAL STEEL DECK SUPPORT AND WELDING
3/4" = 1'-0"

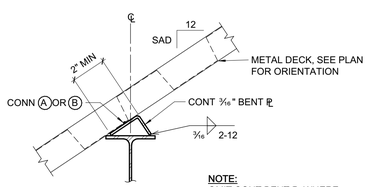

NOTE:
OMIT CONT BENT ⊥ WHERE DECK SLOPE < ½" PER 12"

SINGLE SLOPE

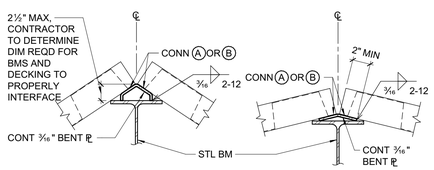

RIDGE/HIP RIDGE/HIP ALT

NOTE:
OMIT CONTINOUS BENT ⊥ WHERE DECK SLOPE < ½" PER 12"

9 TYPICAL SLOPED DECK SUPPORT
1 1/2" = 1'-0"

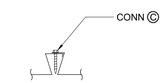

VERSA DECK:
LAYOUT DECK SHEETS SO THAT SIDE SPLICES OCCUR ONLY AT SEAMED EDGES, AS SHOWN

VERCO:
CRIMP BEFORE WELDING

NOTE:
BUTTON PUNCH AND VERCO SIDE LAP CONN NOT SHOWN.

3 TYPICAL DECK SIDE LAP CONNECTION
3" = 1'-0"

QUATTROCCHI KWOK ARCHITECTS
Main:
636 Fifth Street, Santa Rosa, CA 95404
East Bay:
55 Harrison Street, Suite 525
Oakland, CA 94607
(707) 576-0829

ZFA STRUCTURAL ENGINEERS
1212 fourth street | suite z
santa rosa ca 95404
zfa job no. 20315
zfa.com
707.526.0992

copyright © 2020

REGISTERED PROFESSIONAL ENGINEER CHRIS S. WARNER No. S6844 STRUCTURAL STATE OF CALIFORNIA

THIS DOCUMENT AND THE IDEAS INCORPORATED HEREIN, AS AN INSTRUMENT OF PROFESSIONAL SERVICE, IS THE PROPERTY OF THE ENGINEER AND IS NOT TO BE USED, IN WHOLE OR IN PART FOR ANY OTHER PROJECT WITHOUT THE PRIOR WRITTEN AUTHORIZATION OF THE ENGINEER.

FREEDOM HIGH SCHOOL

NEW AUXILIARY GYMNASIUM

1050 NEROLY RD,
OAKLEY, CA 94561

LIBERTY UNION HIGH SCHOOL DISTRICT

REVISIONS

DSA APP NO. 01-119278

ZFA NO:	20315
ENGR / PM:	KNC / DLD
DRAWING SCALE:	As indicated
PTN: 61721-78	FILE NO: 7-H4

BID DOCUMENT

APRIL 27, 2021

SHEET TITLE

TYPICAL METAL DECKING DETAILS

SHEET NUMBER

S-M1.4

C:\revit_local\20315_FREEDOM_S20C_kylec@zfa.com.rvt
4/27/2021 11:13:29 AM

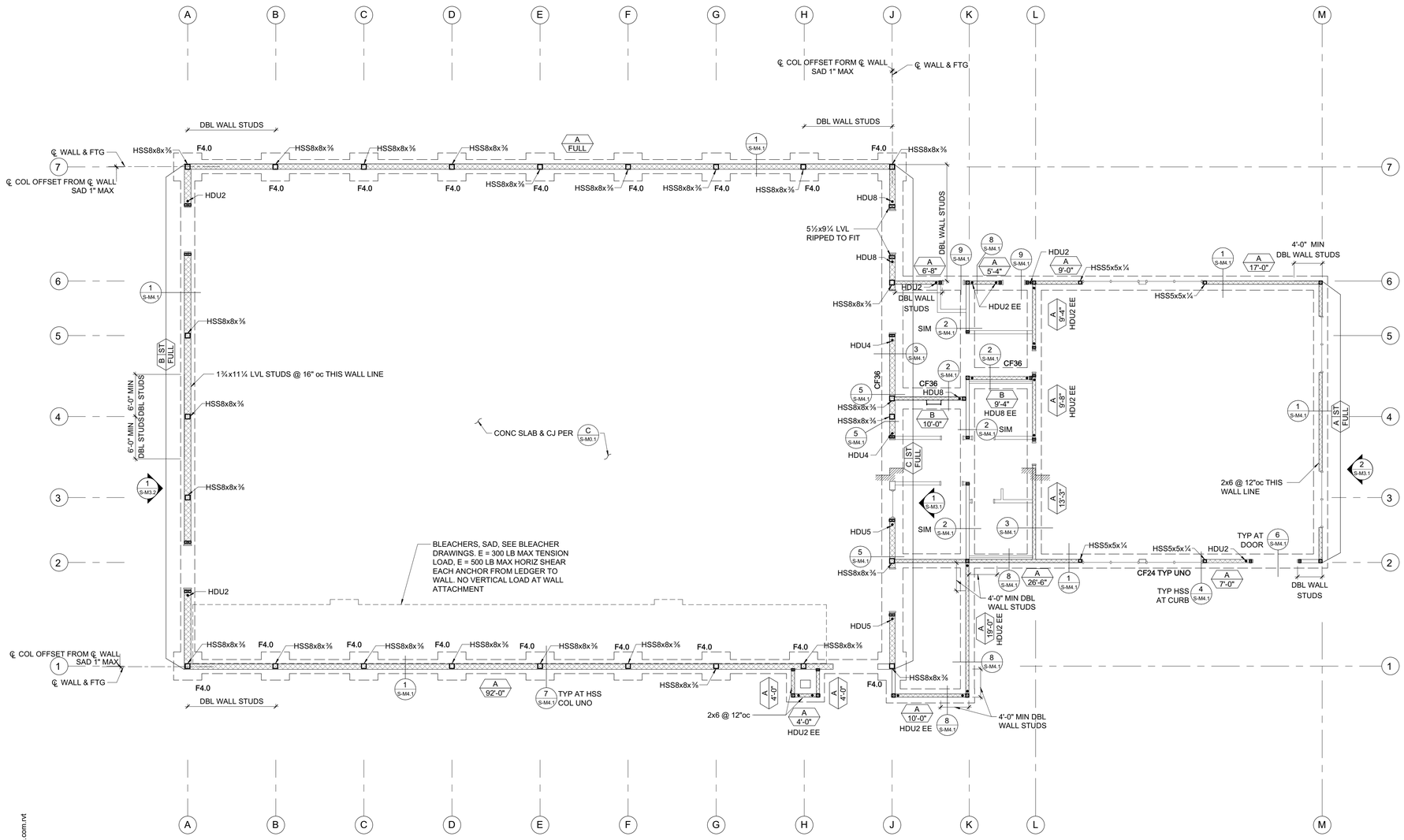

FOUNDATION PLAN

1/8" = 1'-0"

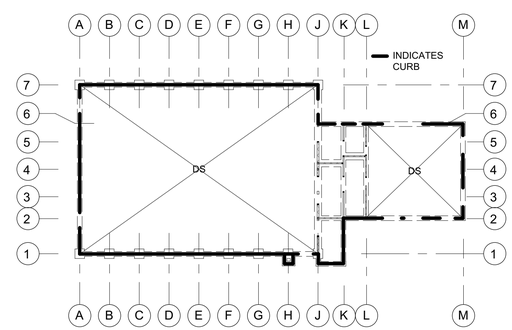

CURB PLAN

NOT TO SCALE

FOUNDATION PLAN NOTES:

1. REFER TO SHEETS S-M0.1, S-M1.1, S-M1.2 AND S-M1.3 FOR GENERAL NOTES AND TYPICAL DETAILS. THE FOLLOWING DETAIL REFERENCES ARE PROVIDED FOR THE CONTRACTOR'S CONVENIENCE ONLY. ALL GENERAL NOTES AND TYPICAL DETAIL SHEETS NOTED ABOVE ARE APPLICABLE AND SHALL BE FOLLOWED.
2. DIMENSIONS ARE TO FACE OF STUD UNLESS NOTED OTHERWISE. COORDINATE ALL DIMENSIONS WITH ARCHITECTURAL DRAWINGS PRIOR TO CONSTRUCTION. NOTIFY ARCHITECT/ENGINEER OF ANY DISCREPANCIES.
3. SEE DETAILS OR CURB PLAN FOR CURB LOCATIONS. COORDINATE WITH ARCHITECTURAL DRAWINGS PRIOR TO CONSTRUCTION. NOTIFY ARCHITECT/ENGINEER OF ANY DISCREPANCIES. PROVIDE LONGER ANCHOR BOLTS AT CURBS PER C/S0.1.
4. ALL EXTERIOR WALLS NOT DESIGNATED AS SHEAR WALLS ON PLANS SHALL BE SHEATHED AS SHEAR WALL TYPE 'A' PER SHEAR WALL SCHEDULE, UNO.
5. PLUMBING AND ELECTRICAL CONDUIT AND GROUND STRAP SHALL NOT BE LAID WITHIN FOUNDATIONS. NO UTILITY PIPES OR CONDUITS SHALL BE LOCATED THRU COLUMN FOOTINGS. NO PIPES OR CONDUITS THRU SILL PLATES SHALL BE WITHIN 12" OF HOLDOWN BOLTS. NO MECHANICAL, ELECTRICAL, OR PLUMBING OPENINGS SHALL BE LOCATED IN SHEAR WALLS UNLESS SHOWN AND DETAILED ON THE STRUCTURAL DRAWINGS. NO VERTICAL OR HORIZONTAL PIPES OR CONDUITS SHALL BE LOCATED THROUGH STEEL COLUMNS, OR STEEL BASE PLATES. PROVIDE FURRING AND/OR THICKENED CONCRETE WHERE REQUIRED TO CLEAR UTILITY SYSTEMS. NOTIFY STRUCTURAL ENGINEER/ARCHITECT PRIOR TO ANY INSTALLATION NOT CONFORMING TO THESE DETAILS.

   PIPES THROUGH FOOTINGS SHALL BE PER 2/S-M1.1 AND 3/S-M1.1.

   PIPES PARALLEL TO FOOTINGS SHALL BE PER 4/S-M1.1 .

   PIPES AT SLAB ON GRADE SHALL BE PER 7/S-M1.1 .

   PIPES THROUGH WOOD FRAMING SHALL BE PER 2/S-M1.2 AND 5/S-M1.3 .
6. CONTRACTOR SHALL DETERMINE FOUNDATION STEP LOCATIONS BASED ON GEOTECHNICAL REPORT, CIVIL, ARCHITECTURAL AND LANDSCAPE DRAWINGS. STEP FOOTING PER 5/S-M1.1 .

PLAN LEGEND

SYMBOL	REFERENCE DETAIL	DESCRIPTION
	1/S-M1.2 D/S-M0.1	INDICATES STRUCTURAL WALL.
A 10'-0"	7/S-M1.2 F/S-M0.1	INDICATES SHEAR WALL TYPE AND MINIMUM WALL LENGTH. SYMBOL LOCATION INDICATES SHEATHED FACE OF WALL UNLESS NOTED OTHERWISE.
A ST 20'-0"	12/S-M1.2	INDICATES STRAPPED SHEAR WALL WITH TYPE AND OVERALL WALL LENGTH, SEE ARCHITECTURAL DRAWINGS FOR OPENINGS.
☒	D/S-M0.1	INDICATES WOOD POST.
☒•	8/S-M1.2	INDICATES POST WITH HOLDOWN. POSTS WITH HOLDOWN ARE FULL HEIGHT FROM SILL TO TOP PLATE.
□	6/S-M1.3	INDICATES STEEL COLUMN.
		INDICATES FOUNDATION.
CF24		INDICATES CONTINUOUS FOOTING SIZE AND REINFORCING PER SCHEDULE.
F2.0		INDICATES PAD FOOTING SIZE AND REINFORCING PER SCHEDULE.
DS	8/S-M1.1 9/S-M1.1	INDICATES DEPRESSED SLAB, SEE ARCHITECTURAL AND PLUMBING DRAWINGS FOR COMPLETE LOCATIONS, DEPTH AND SLOPE INFORMATION.
		INDICATES STEP IN ELEVATION, SEE ARCHITECTURAL DRAWINGS.
88		INDICATES GRIDLINE AT CENTERLINE OF COLUMN.
1 S-M3.1		INDICATES ELEVATION.

CONTINUOUS FOOTING SCHEDULE

MARK	'b'	'd'	REINF 'a'	NOTES
CF24	24"	30"	(3) #6 T&B	PROVIDE #3 TIES @ 32"oc
CF36	36"	30"	(4) #6 T&B	PROVIDE #3 TIES @ 32"oc

PAD FOOTING SCHEDULE

MARK	SIZE	REINFORCING
F4.0	4'-0" SQ x 30" DEEP	(6) #6 T&B EW

SHEAR WALL SCHEDULE

SW	APA RATED SHEATHING	NAILING (PEN)	ANCHORAGE ½"Ø BOLT FDN 2x SILL	ANCHORAGE ½"Ø BOLT FDN 3x SILL	REMARKS
A	15/32 " (32/16) EXP 1	10d @ 6"oc	32"oc	48"oc	
B	15/32 " (32/16) EXP 1	10d @ 4"oc	24"oc	32"oc	SOLID SAWN FRMG: 3x MIN AT ALL ADJOINING PANEL EDGES
C	15/32 " (32/16) EXP 1	10d @ 3"oc	16"oc	24"oc	LVL FRMG: DBL 1¾" AT LVL ADJOINING PANEL EDGES (FLAT BLKG OK AT HORIZ JOINTS). SISTER W/ 16d @ PEN SPCG STGR

QUATTROCCHI KWOK ARCHITECTS

Main:
636 Fifth Street, Santa Rosa, CA 95404
East Bay:
55 Harrison Street, Suite 525
Oakland, CA 94607
(707) 576-0829

ZFA STRUCTURAL ENGINEERS
1212 fourth street | suite z
santa rosa ca 95404
zfa job no. 20315
zfa.com
707.526.0992

copyright © 2020

REGISTERED PROFESSIONAL ENGINEER CHRIS S. WANGSNESS STRUCTURAL STATE OF CALIFORNIA

THIS DOCUMENT AND THE IDEAS INCORPORATED HEREIN, AS AN INSTRUMENT OF PROFESSIONAL SERVICE, IS THE PROPERTY OF THE ENGINEER AND IS NOT TO BE USED, IN WHOLE OR IN PART FOR ANY OTHER PROJECT WITHOUT THE PRIOR WRITTEN AUTHORIZATION OF THE ENGINEER.

FREEDOM HIGH SCHOOL

NEW AUXILIARY GYMNASIUM

1050 NEROLY RD,
OAKLEY, CA 94561

LIBERTY UNION HIGH SCHOOL DISTRICT

REVISIONS

DSA APP NO. 01-119278

ZFA NO: 20315
ENGR / PM: KNC / DLD
DRAWING SCALE: As indicated
PTN: 61721-78 FILE NO: 7-H4

BID DOCUMENT

APRIL 27, 2021

SHEET TITLE

FOUNDATION PLAN

SHEET NUMBER

S-M2.1

C:\revit_local\20315_FREEDOM_S20C_kylec@zfa.com.rvt
4/27/2021 11:13:29 AM

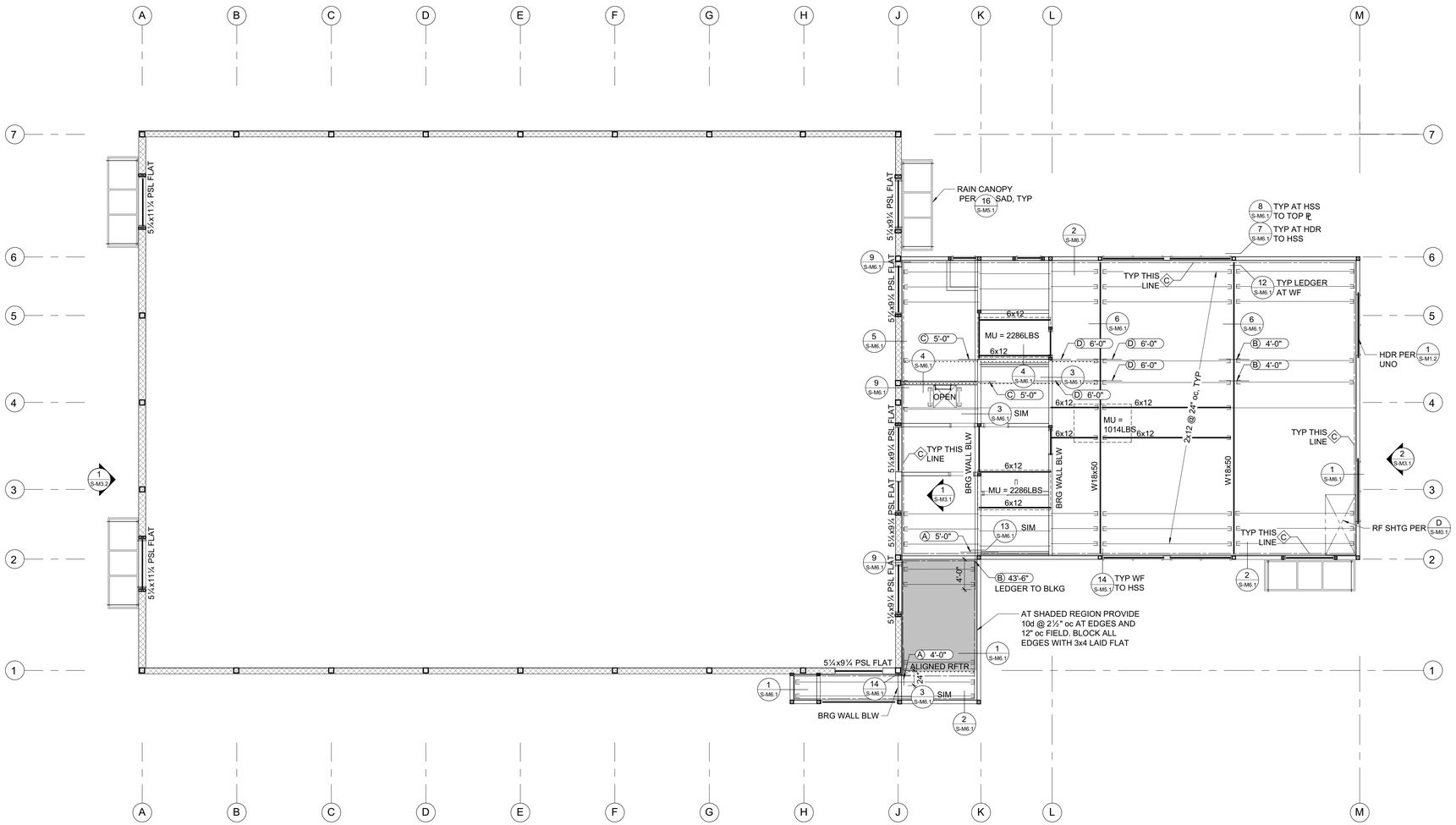

LOWER ROOF FRAMING PLAN

1/8" = 1'-0"

FRAMING PLAN NOTES:

1. REFER TO SHEETS S-M0.1, S-M1.2, S-M1.3 AND S-M1.4 FOR GENERAL NOTES AND TYPICAL DETAILS. THE FOLLOWING DETAIL REFERENCES ARE PROVIDED FOR THE CONTRACTOR'S CONVENIENCE ONLY. ALL GENERAL NOTES AND TYPICAL DETAIL SHEETS NOTED ABOVE ARE APPLICABLE AND SHALL BE FOLLOWED.
2. DIMENSIONS ARE TO FACE OF STUD UNLESS NOTED OTHERWISE. COORDINATE ALL DIMENSIONS WITH ARCHITECTURAL DRAWINGS PRIOR TO CONSTRUCTION. NOTIFY ARCHITECT/ENGINEER OF ANY DISCREPANCIES.
3. MECHANICAL, ELECTRICAL AND PLUMBING PENETRATIONS THROUGH WALLS OR ROOFS SHALL BE PER REFERENCES BELOW UNLESS SHOWN AND DETAILED OTHERWISE ON THE STRUCTURAL PLANS. NOTIFY ARCHITECT/ENGINEER PRIOR TO ANY INSTALLATION NOT CONFORMING TO THESE DETAILS.

   PENETRATIONS THROUGH SHEAR WALLS SHALL BE PER 6/S-M1.2 .

   PENETRATIONS THROUGH ROOFS SHALL BE PER 5/S-M1.2
4. ALL EXTERIOR WALLS NOT DESIGNATED AS SHEAR WALLS ON PLANS (INCLUDING WALLS ADJACENT TO SEISMIC GAPS) SHALL BE SHEATHED AS SHEAR WALL TYPE 'A' PER SHEAR WALL SCHEDULE, UNLESS NOTED OTHERWISE.

PLAN LEGEND

SYMBOL	REFERENCE DETAIL	DESCRIPTION
	1/S-M1.2	INDICATES STRUCTURAL WALL.
	D/S-M0.1	INDICATES WOOD POST.
	6/S-M1.3	INDICATES STEEL COLUMN.
	11/S-M1.2	INDICATES PANEL EDGE NAILING ALONG FULL LENGTH OF MEMBER.
	D/S-M0.1	INDICATES HANGER.
		INDICATES LEDGER. SEE PLAN FOR SIZE AND ANCHORAGE.
88		INDICATES GRIDLINE
1 S-M3.1		INDICATES ELEVATION.
MU 1,000#	7/S-M1.3	INDICATES APPROXIMATE LOCATION, SIZE AND MAXIMUM WEIGHT OF MECHANICAL UNIT. SEE MECHANICAL DRAWINGS FOR ANCHORAGE AND ADDITIONAL INFORMATION.
		INDICATES STEP IN ELEVATION, SEE ARCHITECTURAL DRAWINGS.
A	1/S-M1.3	INDICATES TOP PLATE SPLICE. SPLICE TYPE SHALL OCCUR ALONG THE ENTIRE LENGTH OF THE WALL, UNO. PROVIDE SPLICE TYPE 'A' IF NOT NOTED ON PLANS.
A	2/S-M1.3	INDICATES LEDGER/RIM SPLICE. SPLICE TYPE SHALL OCCUR ALONG THE ENTIRE LENGTH OF THE WALL, UNO. PROVIDE SPLICE TYPE 'A' IF NOT NOTED ON PLANS.
A 4'-0"	3/S-M1.3	INDICATES TIE STRAP. SEE SCHEDULE FOR STRAP, NAILING AND LENGTH.
	8/S-M5.1 9/S-M5.2	INDICATES BRACE BELOW

LEDGER SPLICE SCHEDULE

MARK	CASE	STRAP/PLATE	CASE	STRAP/PLATE
A	1	MSTA24	-	
B	1	MSTA30	-	
C	2	MSTI48	3	MSTI60
D	2	CMST14x5'-6"	3	CMST14x6'-0"
E	2	(2) MSTI48	4	⊑ ¼" W/ (6) 1"Ø MB ES OF SPLICE

TIE STRAP SCHEDULE

MARK	STRAP	MIN. NAILING ES OF ♦	MAX. NAIL SPACING (SEE NOTES #1 & #2)			MIN. END LENGTH (EL)
			CASE 1	CASE 2		
				EL	RL	
A	CS16	(10) 10d	10d @ 4"oc STGR	FILL ALL NAIL HOLES	10d @ 4"oc STGR	12"
B	CS14	(13) 10d	10d @ 4"oc STGR	FILL ALL NAIL HOLES	10d @ 4"oc STGR	16"
C	CMSTC16	(25) 10d	10d @ 3"oc STGR	FILL ALL NAIL HOLES	10d @ 3"oc STGR	24"
D	CMST14	(33) 10d	10d @ 3½"oc STGR	FILL ALL NAIL HOLES	10d @ 3½"oc STGR	32"
E	CMST12	(43) 10d	10d @ 3½"oc STGR	FILL ALL NAIL HOLES	10d @ 3½"oc STGR	48"

1. CASE 1 APPLIES UNLESS END LENGTH (EL) IS NOTED ON PLANS. WHERE END LENGTH (EL) IS NOTED, SEE CASE 2.

QUATTROCCHI KWOK ARCHITECTS

Main:
636 Fifth Street, Santa Rosa, CA 95404
East Bay:
55 Harrison Street, Suite 525
Oakland, CA 94607
(707) 576-0829

ZFA STRUCTURAL ENGINEERS
1212 fourth street | suite z
santa rosa ca 95404
zfa job no. 20315
zfa.com
707.526.0992

copyright © 2020

THIS DOCUMENT AND THE IDEAS INCORPORATED HEREIN, AS AN INSTRUMENT OF PROFESSIONAL SERVICE, IS THE PROPERTY OF THE ENGINEER AND IS NOT TO BE USED, IN WHOLE OR IN PART FOR ANY OTHER PROJECT WITHOUT THE PRIOR WRITTEN AUTHORIZATION OF THE ENGINEER.

FREEDOM HIGH SCHOOL

NEW AUXILIARY GYMNASIUM

1050 NEROLY RD,
OAKLEY, CA 94561

LIBERTY UNION HIGH SCHOOL DISTRICT

REVISIONS

DSA APP NO. 01-119278

ZFA NO: 20315
ENGR / PM: KNC / DLD
DRAWING SCALE: As indicated
PTN: 61721-78 FILE NO: 7-H4

BID DOCUMENT

APRIL 27, 2021

SHEET TITLE

LOWER ROOF FRAMING PLAN

SHEET NUMBER

S-M2.2

C:\revit_local\20315_FREEDOM_S20C_kylec@zfa.com.rvt
4/27/2021 11:13:31 AM

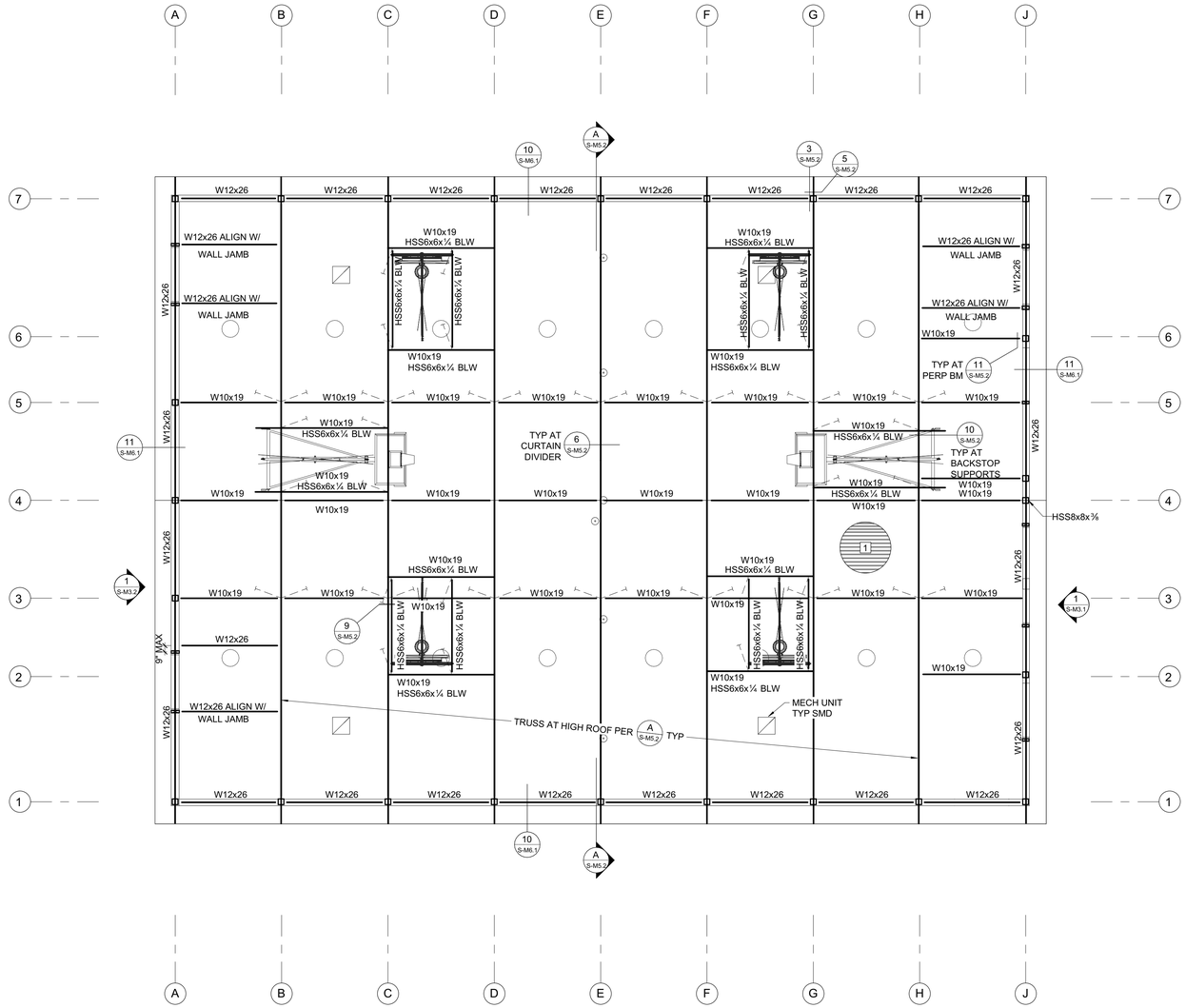

UPPER ROOF FRAMING PLAN

1/8" = 1'-0"

FRAMING PLAN NOTES:

1. REFER TO SHEETS S-M0.1, S-M1.2, S-M1.3 AND S-M1.4 FOR GENERAL NOTES AND TYPICAL DETAILS. THE FOLLOWING DETAIL REFERENCES ARE PROVIDED FOR THE CONTRACTOR'S CONVENIENCE ONLY. ALL GENERAL NOTES AND TYPICAL DETAIL SHEETS NOTED ABOVE ARE APPLICABLE AND SHALL BE FOLLOWED.
2. DIMENSIONS ARE TO FACE OF STUD UNLESS NOTED OTHERWISE. COORDINATE ALL DIMENSIONS WITH ARCHITECTURAL DRAWINGS PRIOR TO CONSTRUCTION. NOTIFY ARCHITECT/ENGINEER OF ANY DISCREPANCIES.
3. MECHANICAL, ELECTRICAL AND PLUMBING PENETRATIONS THROUGH WALLS OR ROOFS SHALL BE PER REFERENCES BELOW UNLESS SHOWN AND DETAILED OTHERWISE ON THE STRUCTURAL PLANS. NOTIFY ARCHITECT/ENGINEER PRIOR TO ANY INSTALLATION NOT CONFORMING TO THESE DETAILS.

   PENETRATIONS THROUGH SHEAR WALLS SHALL BE PER 6/S-M1.2 .

   PENETRATIONS THROUGH ROOFS SHALL BE PER .5/S-M1.2
4. ALL EXTERIOR WALLS NOT DESIGNATED AS SHEAR WALLS ON PLANS (INCLUDING WALLS ADJACENT TO SEISMIC GAPS) SHALL BE SHEATHED AS SHEAR WALL TYPE 'A' PER SHEAR WALL SCHEDULE, UNLESS NOTED OTHERWISE.

PLAN LEGEND

SYMBOL	REFERENCE DETAIL	DESCRIPTION
	1/S-M1.2	INDICATES STRUCTURAL WALL.
	D/S-M0.1	INDICATES WOOD POST.
	6/S-M1.3	INDICATES STEEL COLUMN.
	11/S-M1.2	INDICATES PANEL EDGE NAILING ALONG FULL LENGTH OF MEMBER.
	D/S-M0.1	INDICATES HANGER.
		INDICATES LEDGER. SEE PLAN FOR SIZE AND ANCHORAGE.
88		INDICATES GRIDLINE
1 S-M3.1		INDICATES ELEVATION.
MU 1,000#	7/S-M1.3	INDICATES APPROXIMATE LOCATION, SIZE AND MAXIMUM WEIGHT OF MECHANICAL UNIT. SEE MECHANICAL DRAWINGS FOR ANCHORAGE AND ADDITIONAL INFORMATION.
		INDICATES STEP IN ELEVATION, SEE ARCHITECTURAL DRAWINGS.
A	1/S-M1.3	INDICATES TOP PLATE SPLICE. SPLICE TYPE SHALL OCCUR ALONG THE ENTIRE LENGTH OF THE WALL, UNO. PROVIDE SPLICE TYPE 'A' IF NOT NOTED ON PLANS.
A	2/S-M1.3	INDICATES LEDGER/RIM SPLICE. SPLICE TYPE SHALL OCCUR ALONG THE ENTIRE LENGTH OF THE WALL, UNO. PROVIDE SPLICE TYPE 'A' IF NOT NOTED ON PLANS.
A 4'-0"	3/S-M1.3	INDICATES TIE STRAP. SEE SCHEDULE FOR STRAP, NAILING AND LENGTH.
	8/S-M5.1 9/S-M5.2	INDICATES BRACE BELOW

TIE STRAP SCHEDULE

MARK	STRAP	MIN. NAILING ES OF ♦	MAX. NAIL SPACING (SEE NOTES #1 & #2) CASE 1	CASE 2 EL	CASE 2 RL	MIN. END LENGTH (EL)
A	CS16	(10) 10d	10d @ 4"oc STGR	FILL ALL NAIL HOLES	10d @ 4"oc STGR	12"
B	CS14	(13) 10d	10d @ 4"oc STGR	FILL ALL NAIL HOLES	10d @ 4"oc STGR	16"
C	CMSTC16	(25) 10d	10d @ 3"oc STGR	FILL ALL NAIL HOLES	10d @ 3"oc STGR	24"
D	CMST14	(33) 10d	10d @ 3½"oc STGR	FILL ALL NAIL HOLES	10d @ 3½"oc STGR	32"
E	CMST12	(43) 10d	10d @ 3½"oc STGR	FILL ALL NAIL HOLES	10d @ 3½"oc STGR	48"

1. CASE 1 APPLIES UNLESS END LENGTH (EL) IS NOTED ON PLANS. WHERE END LENGTH (EL) IS NOTED, SEE CASE 2.

QUATTROCCHI KWOK ARCHITECTS

Main:
636 Fifth Street, Santa Rosa, CA 95404
East Bay:
55 Harrison Street, Suite 525
Oakland, CA 94607
(707) 576-0829

ZFA STRUCTURAL ENGINEERS
1212 fourth street | suite z
santa rosa ca 95404
zfa job no. 20315
zfa.com
707.526.0992

copyright © 2020

REGISTERED PROFESSIONAL ENGINEER CHRIS S. WARNER STRUCTURAL STATE OF CALIFORNIA

THIS DOCUMENT AND THE IDEAS INCORPORATED HEREIN, AS AN INSTRUMENT OF PROFESSIONAL SERVICE, IS THE PROPERTY OF THE ENGINEER AND IS NOT TO BE USED, IN WHOLE OR IN PART FOR ANY OTHER PROJECT WITHOUT THE PRIOR WRITTEN AUTHORIZATION OF THE ENGINEER.

FREEDOM HIGH SCHOOL

NEW AUXILIARY GYMNASIUM

1050 NEROLY RD,
OAKLEY, CA 94561

LIBERTY UNION HIGH SCHOOL DISTRICT

REVISIONS

DSA APP NO. 01-119278

ZFA NO: 20315
ENGR / PM: KNC / DLD
DRAWING SCALE: As indicated
PTN: 61721-78 FILE NO: 7-H4

BID DOCUMENT

APRIL 27, 2021

SHEET TITLE

UPPER ROOF FRAMING PLAN

SHEET NUMBER

S-M2.3

C:\revit_local\20315_FREEDOM_S20C_kylec@zfa.com.rvt
4/27/2021 11:13:32 AM

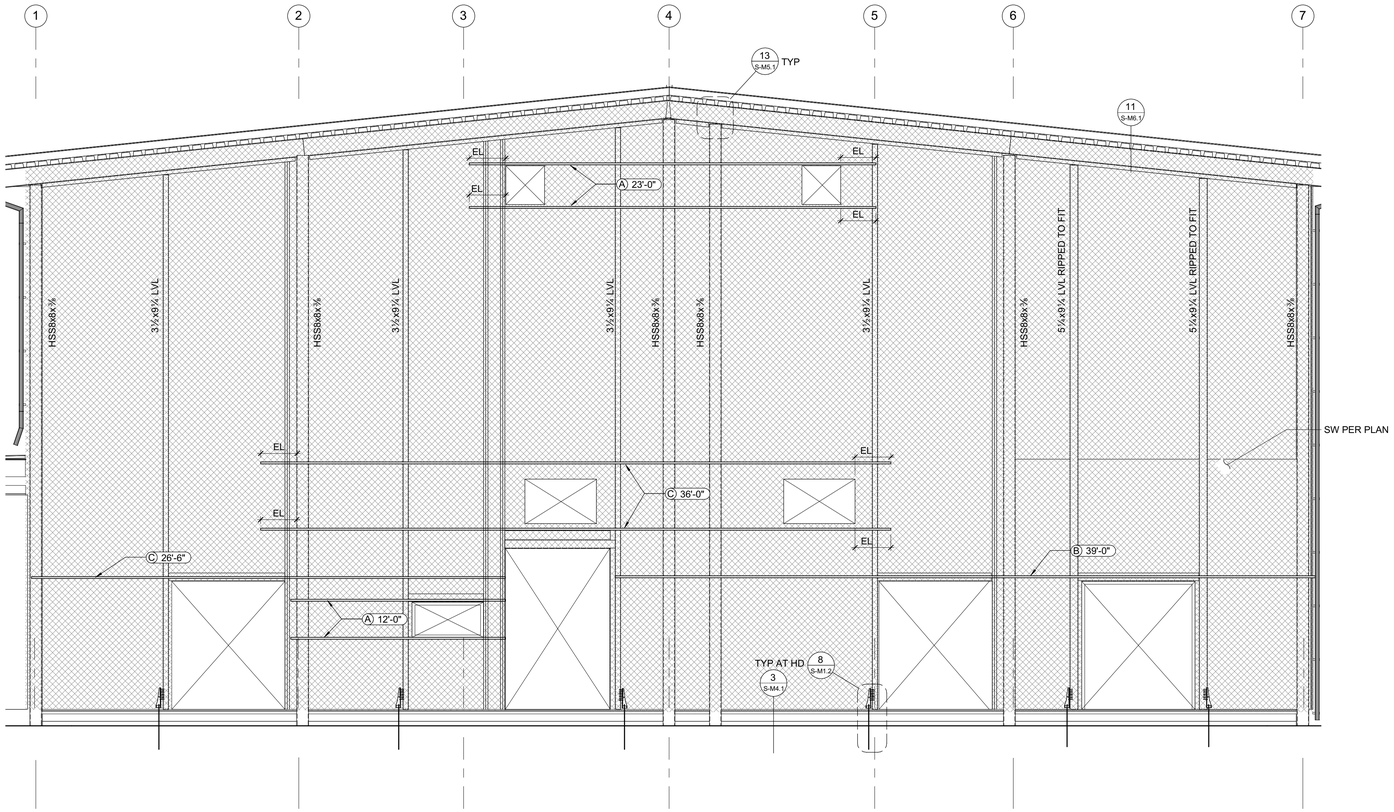

1 ELEVATION 1
1/4" = 1'-0"

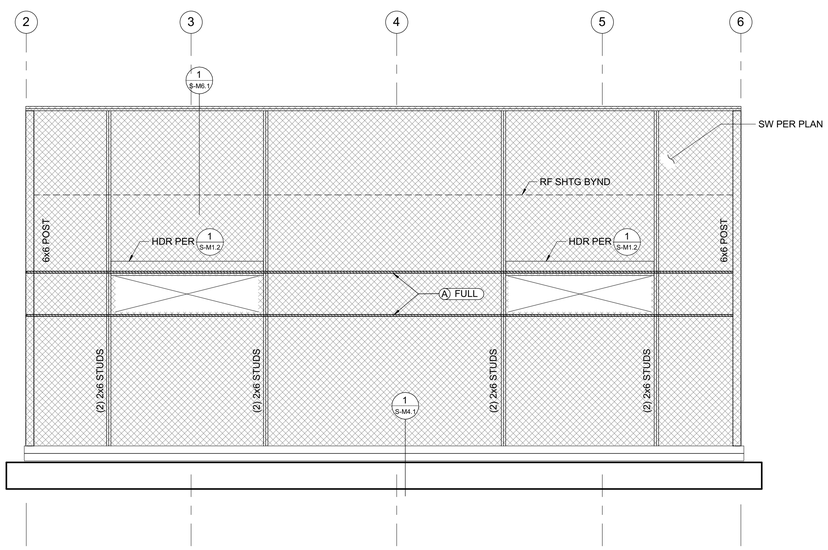

2 ELEVATION 2
1/4" = 1'-0"

FRAMING ELEVATION NOTES:

1. ELEVATIONS ARE SCHEMATIC. SEE PLANS FOR ADDITIONAL INFORMATION.
2. SEE PLANS FOR ALL COLUMN AND BEAM SIZES.
3. SAD FOR FRAMING HEIGHTS, BEAM SLOPES AND ALL DIMENSIONS.
4. NO COLUMN SPLICES PERMITTED EXCEPT WHERE NOTED.

TIE STRAP SCHEDULE

MARK	STRAP	MIN. NAILING ES OF ◆	MAX. NAIL SPACING (SEE NOTES #1 & #2)			MIN. END LENGTH (EL)
			CASE 1	CASE 2		
				EL	RL	
Ⓐ	CS16	(10) 10d	10d @ 4"oc STGR	FILL ALL NAIL HOLES	10d @ 4"oc STGR	12"
Ⓑ	CS14	(13) 10d	10d @ 4"oc STGR	FILL ALL NAIL HOLES	10d @ 4"oc STGR	16"
Ⓒ	CMSTC16	(25) 10d	10d @ 3"oc STGR	FILL ALL NAIL HOLES	10d @ 3"oc STGR	24"
Ⓓ	CMST14	(33) 10d	10d @ 3½"oc STGR	FILL ALL NAIL HOLES	10d @ 3½"oc STGR	32"
Ⓔ	CMST12	(43) 10d	10d @ 3½"oc STGR	FILL ALL NAIL HOLES	10d @ 3½"oc STGR	48"

1. CASE 1 APPLIES UNLESS END LENGTH (EL) IS NOTED ON PLANS. WHERE END LENGTH (EL) IS NOTED, SEE CASE 2.

QUATTROCCHI KWOK ARCHITECTS

Main:
636 Fifth Street, Santa Rosa, CA 95404
East Bay:
55 Harrison Street, Suite 525
Oakland, CA 94607
(707) 576-0829

ZFA STRUCTURAL ENGINEERS
1212 fourth street | suite z
santa rosa ca 95404
zfa job no. 20315
zfa.com
707.526.0992

copyright © 2020

REGISTERED PROFESSIONAL ENGINEER CHRIS S. WARNER No. S8804 STRUCTURAL STATE OF CALIFORNIA

THIS DOCUMENT AND THE IDEAS INCORPORATED HEREIN, AS AN INSTRUMENT OF PROFESSIONAL SERVICE, IS THE PROPERTY OF THE ENGINEER AND IS NOT TO BE USED, IN WHOLE OR IN PART FOR ANY OTHER PROJECT WITHOUT THE PRIOR WRITTEN AUTHORIZATION OF THE ENGINEER.

FREEDOM HIGH SCHOOL

NEW AUXILIARY GYMNASIUM

1050 NEROLY RD,
OAKLEY, CA 94561

LIBERTY UNION HIGH SCHOOL DISTRICT

REVISIONS

DSA APP NO. 01-119278

ZFA NO:	20315
ENGR / PM:	KNC / DLD
DRAWING SCALE:	As indicated
PTN: 61721-78	FILE NO: 7-H4

BID DOCUMENT

APRIL 27, 2021

SHEET TITLE

ELEVATIONS

SHEET NUMBER

S-M3.1

C:\revit_local\20315_FREEDOM_S20C_kylec@zfa.com.rvt
4/27/2021 11:13:33 AM

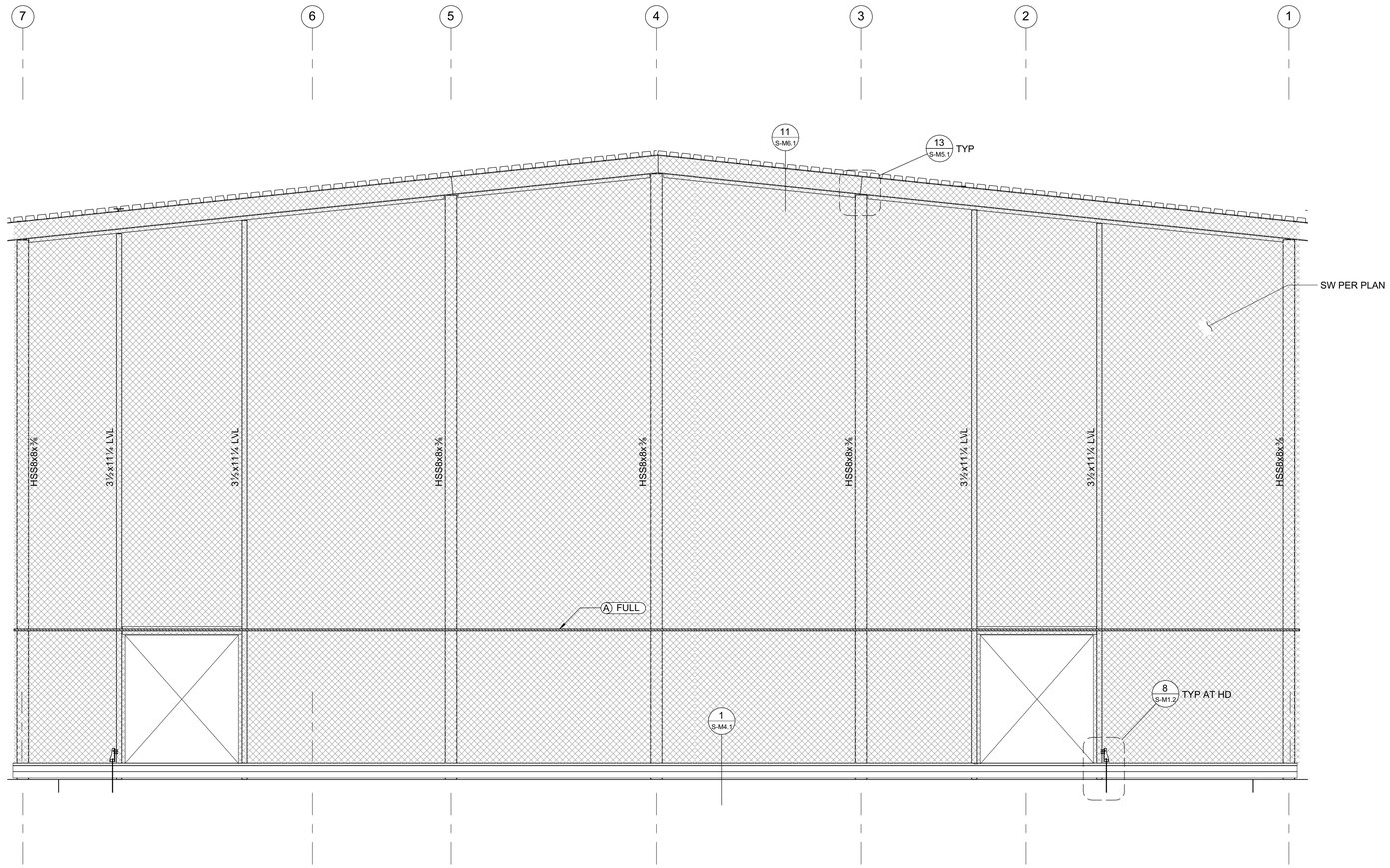

1 ELEVATION 3
1/4" = 1'-0"

TIE STRAP SCHEDULE

MARK	STRAP	MIN. NAILING ES OF •	MAX. NAIL SPACING (SEE NOTES #1 & #2)			MIN. END LENGTH (EL)
			CASE 1	CASE 2		
				EL	RL	
Ⓐ	CS16	(10) 10d	10d @ 4"oc STGR	FILL ALL NAIL HOLES	10d @ 4"oc STGR	12"
Ⓑ	CS14	(13) 10d	10d @ 4"oc STGR	FILL ALL NAIL HOLES	10d @ 4"oc STGR	16"
Ⓒ	CMSTC16	(25) 10d	10d @ 3"oc STGR	FILL ALL NAIL HOLES	10d @ 3"oc STGR	24"
Ⓓ	CMST14	(33) 10d	10d @ 3½"oc STGR	FILL ALL NAIL HOLES	10d @ 3½"oc STGR	32"
Ⓔ	CMST12	(43) 10d	10d @ 3½"oc STGR	FILL ALL NAIL HOLES	10d @ 3½"oc STGR	48"

1. CASE 1 APPLIES UNLESS END LENGTH (EL) IS NOTED ON PLANS. WHERE END LENGTH (EL) IS NOTED, SEE CASE 2.

QUATTROCCHI KWOK ARCHITECTS

Main:
636 Fifth Street, Santa Rosa, CA 95404
East Bay:
55 Harrison Street, Suite 525
Oakland, CA 94607
(707) 576-0829

ZFA STRUCTURAL ENGINEERS
1212 fourth street | suite z
santa rosa ca 95404
zfa job no. 20315
zfa.com
707.526.0992

copyright © 2020

REGISTERED PROFESSIONAL ENGINEER CHRIS S. WARNER STRUCTURAL STATE OF CALIFORNIA

THIS DOCUMENT AND THE IDEAS INCORPORATED HEREIN, AS AN INSTRUMENT OF PROFESSIONAL SERVICE, IS THE PROPERTY OF THE ENGINEER AND IS NOT TO BE USED, IN WHOLE OR IN PART FOR ANY OTHER PROJECT WITHOUT THE PRIOR WRITTEN AUTHORIZATION OF THE ENGINEER.

FREEDOM HIGH SCHOOL

NEW AUXILIARY GYMNASIUM

1050 NEROLY RD,
OAKLEY, CA 94561

LIBERTY UNION HIGH SCHOOL DISTRICT

REVISIONS

DSA APP NO. 01-119278

ZFA NO:	20315
ENGR / PM:	KNC / DLD
DRAWING SCALE:	As indicated
PTN: 61721-78	FILE NO: 7-H4

BID DOCUMENT

APRIL 27, 2021

SHEET TITLE

ELEVATIONS

SHEET NUMBER

S-M3.2

C:\revit_local\20315_FREEDOM_S20C_kylec@zfa.com.rvt
4/27/2021 11:13:33 AM

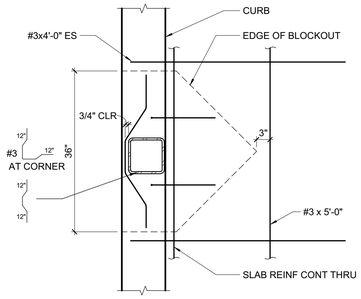

A PLAN VIEW

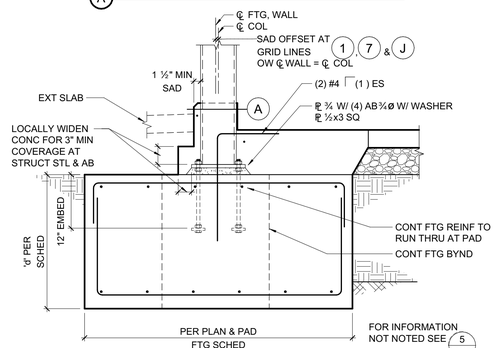

7 HSS COLUMN AT CURB
3/4" = 1'-0"

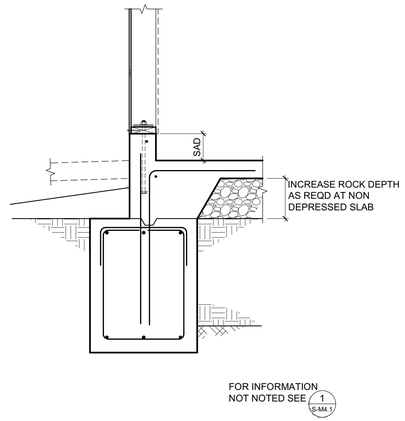

8 TYPICAL EXTERIOR FOOTING
3/4" = 1'-0"

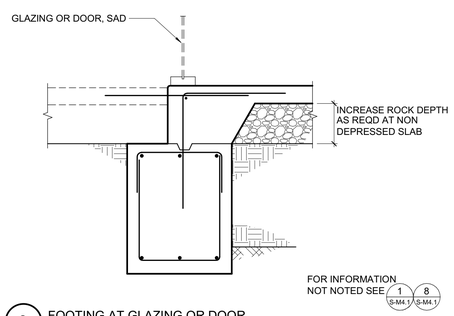

9 FOOTING AT GLAZING OR DOOR
3/4" = 1'-0"

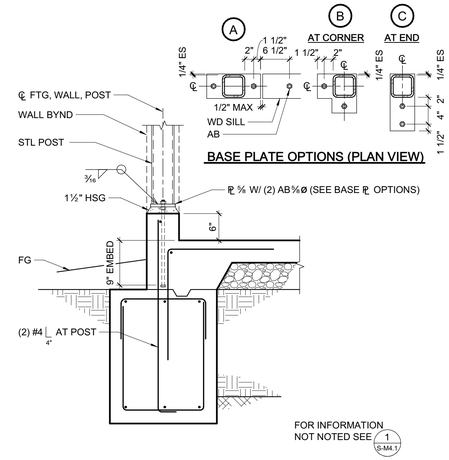

4 HSS COLUMN AT EXTERIOR FOOTING WITH CURB
3/4" = 1'-0"

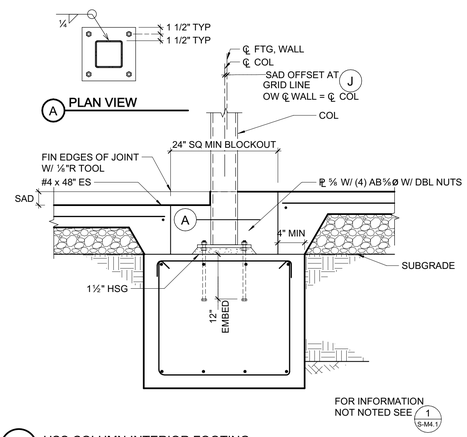

5 HSS COLUMN INTERIOR FOOTING
3/4" = 1'-0"

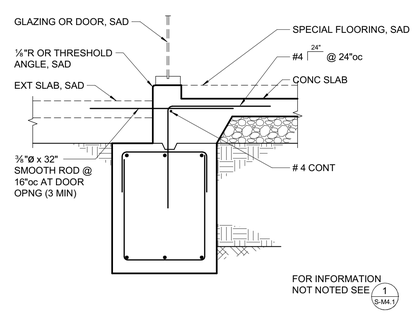

6 FOOTING AT GLAZING OR DOOR
3/4" = 1'-0"

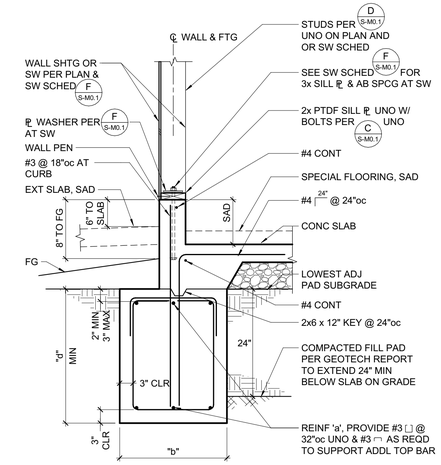

CONTINUOUS FOOTING SCHEDULE				
MARK	'b'	'd'	REINF 'a'	NOTES
CF24	24"	30"	(3) #6 T&B	PROVIDE #3 TIES @ 32"oc
CF36	36"	30"	(4) #6 T&B	PROVIDE #3 TIES @ 32"oc

1 TYPICAL EXTERIOR FOOTING
3/4" = 1'-0"

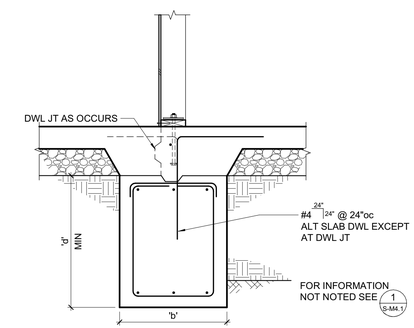

2 INTERIOR FOOTING AT SHEAR WALL
3/4" = 1'-0"

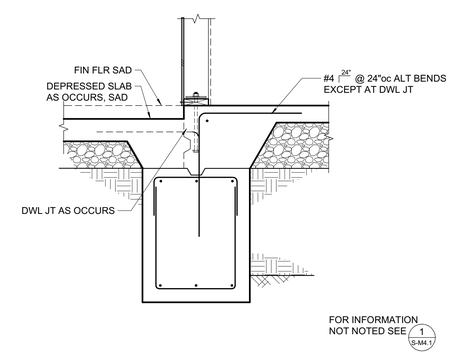

3 INTERIOR FOOTING AT GYM & CLASSROOM WALL
3/4" = 1'-0"

QUATTROCCHI KWOK ARCHITECTS

Main:
636 Fifth Street, Santa Rosa, CA 95404
East Bay:
55 Harrison Street, Suite 525
Oakland, CA 94607
(707) 576-0829

ZFA STRUCTURAL ENGINEERS
1212 fourth street | suite z
santa rosa ca 95404
zfa job no. 20315
zfa.com
707.526.0992

copyright © 2020

REGISTERED PROFESSIONAL ENGINEER CHRIS S. WARNER No. S8814 STRUCTURAL STATE OF CALIFORNIA

THIS DOCUMENT AND THE IDEAS INCORPORATED HEREIN, AS AN INSTRUMENT OF PROFESSIONAL SERVICE, IS THE PROPERTY OF THE ENGINEER AND IS NOT TO BE USED, IN WHOLE OR IN PART FOR ANY OTHER PROJECT WITHOUT THE PRIOR WRITTEN AUTHORIZATION OF THE ENGINEER.

FREEDOM HIGH SCHOOL

NEW AUXILIARY GYMNASIUM

1050 NEROLY RD,
OAKLEY, CA 94561

LIBERTY UNION HIGH SCHOOL DISTRICT

REVISIONS

DSA APP NO. 01-119278

ZFA NO:	20315
ENGR / PM:	KNC / DLD
DRAWING SCALE:	3/4" = 1'-0"
PTN: 61721-78	FILE NO: 7-H4

BID DOCUMENT

APRIL 27, 2021

SHEET TITLE

FOUNDATION DETAILS

SHEET NUMBER

S-M4.1

C:\revit_local\20315_FREEDOM_S20C_kylec@zfa.com.rvt
4/27/2021 11:13:34 AM

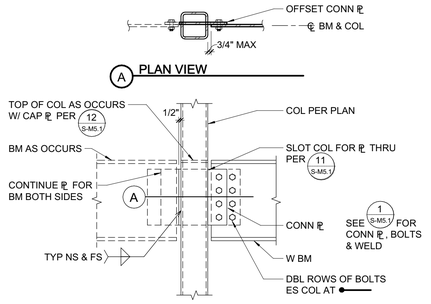

14 BEAM EACH SIDE TO HSS COLUMN
3/4" = 1'-0"

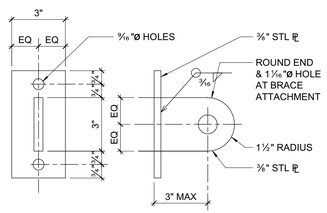

15 DIAGONAL BRACE MOUNTING
3" = 1'-0"

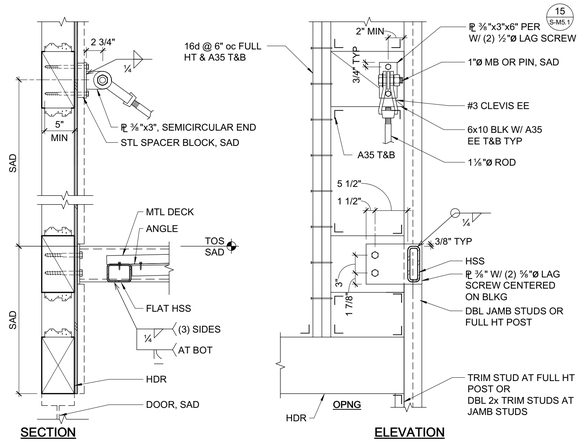

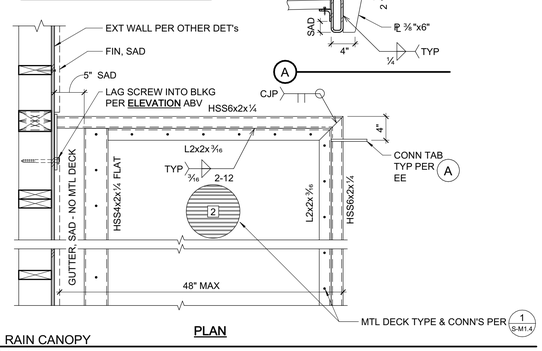

16 RAIN CANOPY
1" = 1'-0"

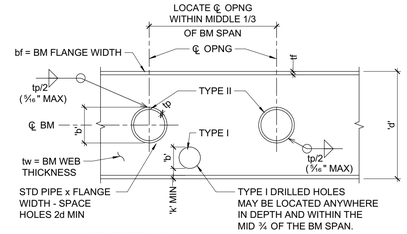

LIMITS OF OPENINGS:
TYPE I: b = 1/5d MAX
SPACED A MINIMUM OF 2d APART
TYPE II:b = 2/3d MAX
SPACED A MINIMUM 2d APART

NOTES:
1. PROVIDE HOLES IN BEAMS ONLY WHERE SPECIFICALLY SHOWN ON STRUCTURAL DRAWINGS.
2. DO NOT TORCH CUT OPENINGS ON SITE. TORCH CUT OPENINGS MADE IN SHOP TO BE GROUND SMOOTH. NO OVERCUTS OF ANY TYPE ALLOWED WITHOUT REPAIR.

10 OPENING IN STEEL BEAM
3/4" = 1'-0"

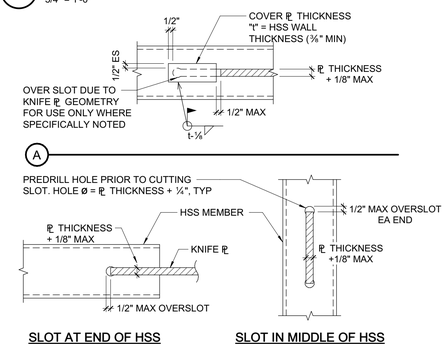

11 TYPICAL SLOTTED HSS FOR GUSSET CONNECTION
1 1/2" = 1'-0"

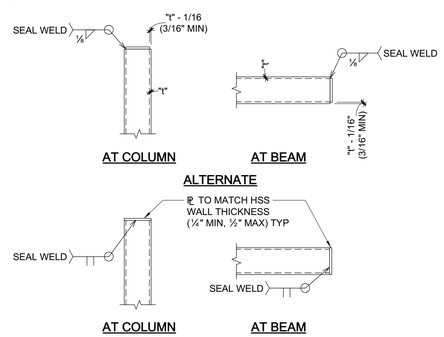

12 TYPICAL CAP PLATE
3/4" = 1'-0"

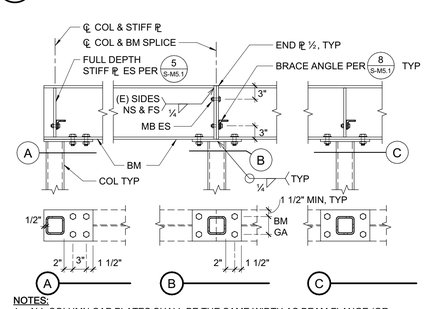

NOTES:
1. ALL COLUMN CAP PLATES SHALL BE THE SAME WIDTH AS BEAM FLANGE (OR COLUMN DIMENSION +½", WHICHEVER IS GREATER), THICKNESS SAME AS BEAM FLANGE, ½" MINIMUM.
2. ALL FASTENERS TO BE MB¾ø.

13 COLUMN ABOVE AND BELOW
3/4" = 1'-0"

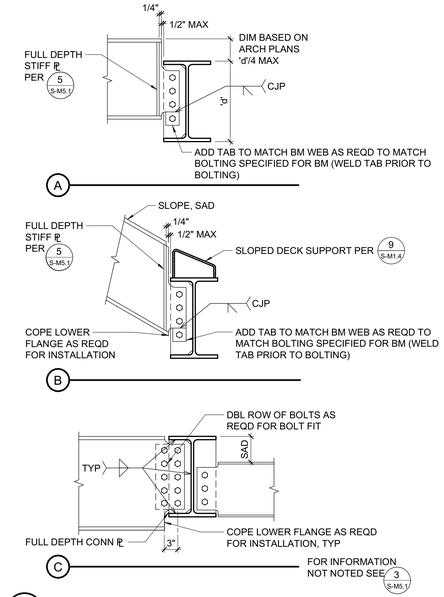

6 TYPICAL BEAM TO BEAM CONNECTIONS
3/4" = 1'-0"

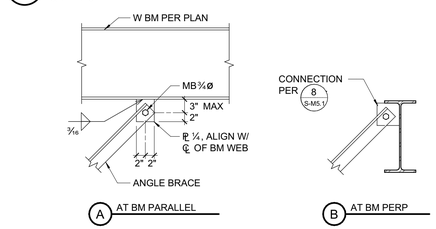

7 TOP OF BRACE
3/4" = 1'-0"

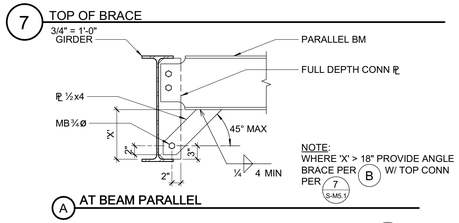

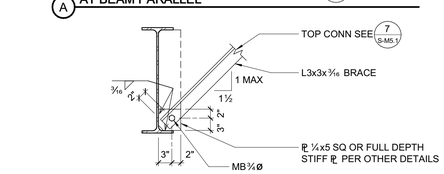

8 TYPICAL BEAM BOTTOM FLANGE BRACE
3/4" = 1'-0"

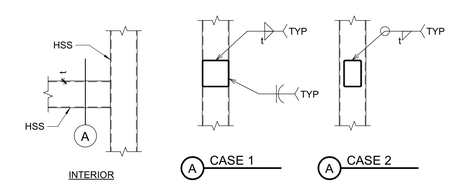

9 TYPICAL HSS TO HSS CONNECTION
3/4" = 1'-0"

BEAM DEPTH	NO. BOLTS PER ROW	CONN. PLATE	WELD SIZE
W8, W10	2	ℙ ⅜	5/16"
W12, W14	3	ℙ ⅜	5/16"
W18	5	ℙ ⅜	5/16"

NOTES:
1. R = 1¾" SEE TYP CONNECTION DETAILS. BOLT SPACING AND EDGE DISTANCE SHALL CONFORM TO AISC SPECIFICATIONS.
2. A COMPLETE PENETRATION BEVEL WELD MAY BE SUBSTITUTED FOR THE FILLET WELDS SPECIFIED.
3. USE ASTM A36 CONNECTION PLATES, UNO.
4. HOLE SIZE = BOLT SIZE + 1/16". SHORT SLOTTED HOLES (+ 1/16" VERT, + ¼" HORIZ) MAY BE SUBSTITUTED (EXCEPT AS NOTED).
5. USE SAME CONNECTIONS AT CHANNELS. FOR W6, C6 & ANGLES USE PLATE, WELD & BOLT SIZE PER W8 & SEE 4/S-M5.1

1 ¾"ø MACHINE BOLT (MB) CONNECTION SCHEDULE
3/4" = 1'-0"

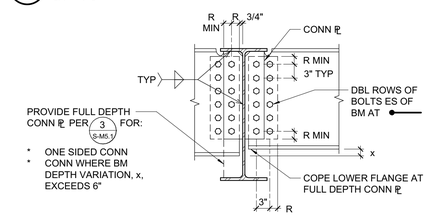

SEE 1 S-M5.1 FOR CONN ℙ, BOLTS, & WELD

2 TYPICAL BEAM TO BEAM CONNECTION
3/4" = 1'-0"

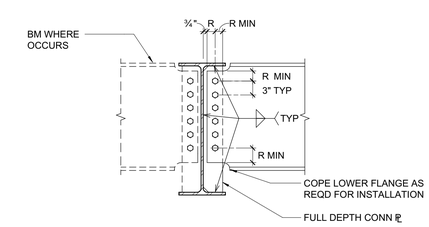

SEE 1 S-M5.1 FOR CONN ℙ, BOLTS, & WELD

3 TYPICAL FULL DEPTH BEAM TO BEAM CONNECTION
3/4" = 1'-0"

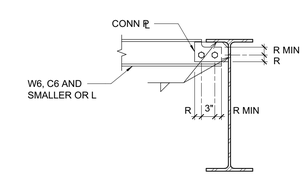

SEE 1 S-M5.1 FOR CONN ℙ, BOLTS, & WELD

4 TYPICAL SHALLOW BEAM DETAIL
3/4" = 1'-0"

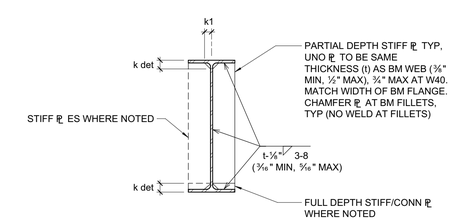

5 TYPICAL BEAM WEB STIFFENER PLATE DETAIL
3/4" = 1'-0"

QUATTROCCHI KWOK ARCHITECTS
Main:
636 Fifth Street, Santa Rosa, CA 95404
East Bay:
55 Harrison Street, Suite 525
Oakland, CA 94607
(707) 576-0829

ZFA STRUCTURAL ENGINEERS
1212 fourth street | suite z
santa rosa ca 95404
zfa job no. 20315
zfa.com
707.526.0992

copyright © 2020

REGISTERED PROFESSIONAL ENGINEER CHRIS S. WARNER STRUCTURAL STATE OF CALIFORNIA

THIS DOCUMENT AND THE IDEAS INCORPORATED HEREIN, AS AN INSTRUMENT OF PROFESSIONAL SERVICE, IS THE PROPERTY OF THE ENGINEER AND IS NOT TO BE USED, IN WHOLE OR IN PART FOR ANY OTHER PROJECT WITHOUT THE PRIOR WRITTEN AUTHORIZATION OF THE ENGINEER.

FREEDOM HIGH SCHOOL

NEW AUXILIARY GYMNASIUM

1050 NEROLY RD,
OAKLEY, CA 94561

LIBERTY UNION HIGH SCHOOL DISTRICT

REVISIONS

DSA APP NO. 01-119278

ZFA NO:	20315
ENGR / PM:	KNC / DLD
DRAWING SCALE:	As indicated
PTN: 61721-78	FILE NO: 7-H4

BID DOCUMENT

APRIL 27, 2021

SHEET TITLE

STEEL FRAMING DETAILS

SHEET NUMBER

S-M5.1

C:\revit_local\20315_FREEDOM_S20C_kylec@zfa.com.rvt
4/27/2021 11:13:38 AM

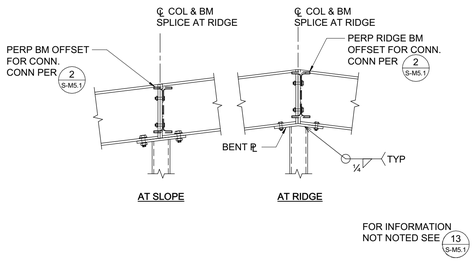

11 HSS COLUMN AT BEAM
3/4" = 1'-0"

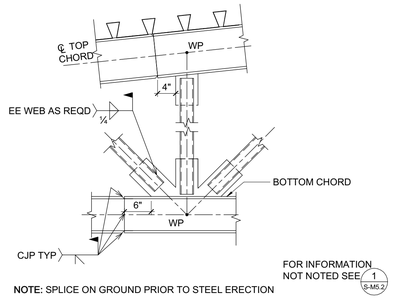

7 TRUSS SPLICE OPTION
3/4" = 1'-0"

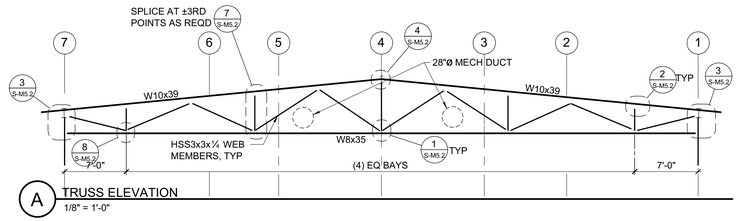

A TRUSS ELEVATION
1/8" = 1'-0"

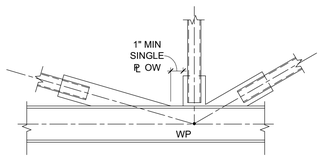

FOR INFORMATION NOT NOTED SEE 1 S-M5.2

8 TRUSS TO COLUMN CONNECTION
3/4" = 1'-0"

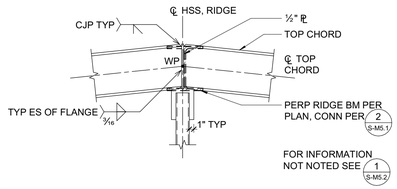

4 TRUSS WEB TO CHORD CONNECTION
3/4" = 1'-0"

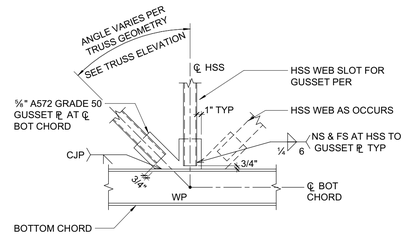

1 TRUSS WEB TO CHORD CONNECTION
3/4" = 1'-0"

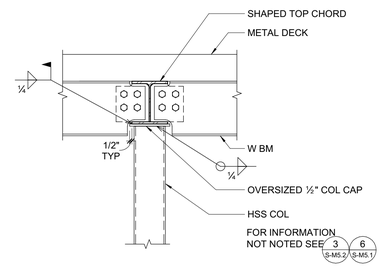

5 TRUSS TO COLUMN CONNECTION
3/4" = 1'-0"

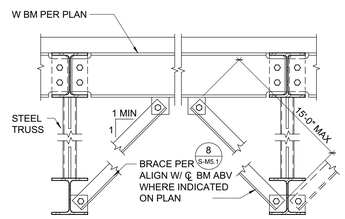

9 BRACING AT STEEL TRUSS
3/4" = 1'-0"

2 TRUSS WEB TO CHORD CONNECTION
3/4" = 1'-0"

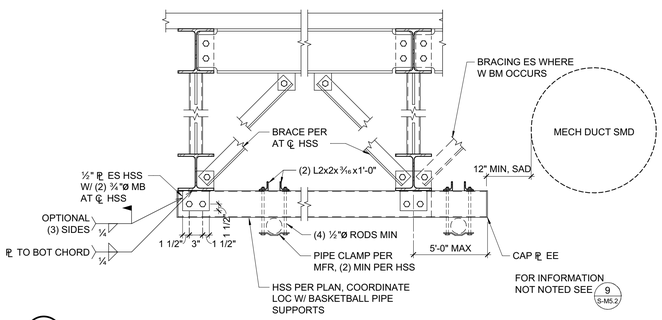

10 BASKETBALL BACKBOARD SUPPORT
3/4" = 1'-0"

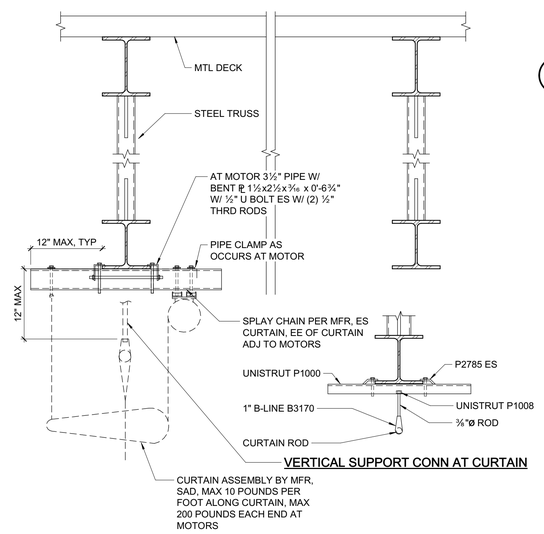

6 DIVIDER CURTAIN ATTACHMENT
1" = 1'-0"

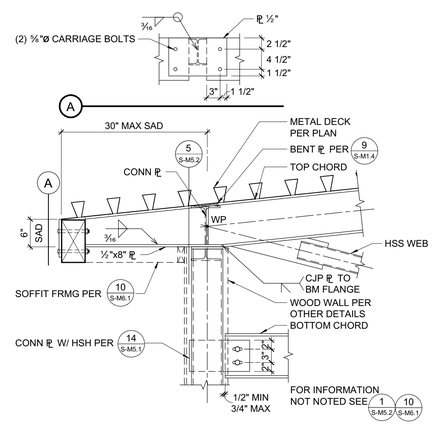

3 TRUSS TO COLUMN CONNECTION
3/4" = 1'-0"

QUATTROCCHI KWOK ARCHITECTS

Main:
636 Fifth Street, Santa Rosa, CA 95404
East Bay:
55 Harrison Street, Suite 525
Oakland, CA 94607
(707) 576-0829

ZFA STRUCTURAL ENGINEERS
1212 fourth street | suite z
santa rosa ca 95404
zfa job no. 20315
zfa.com
707.526.0992

copyright © 2020

REGISTERED PROFESSIONAL ENGINEER CHRIS S. WARNER 2/26/2021 STRUCTURAL STATE OF CALIFORNIA

THIS DOCUMENT AND THE IDEAS INCORPORATED HEREIN, AS AN INSTRUMENT OF PROFESSIONAL SERVICE, IS THE PROPERTY OF THE ENGINEER AND IS NOT TO BE USED, IN WHOLE OR IN PART FOR ANY OTHER PROJECT WITHOUT THE PRIOR WRITTEN AUTHORIZATION OF THE ENGINEER.

FREEDOM HIGH SCHOOL

NEW AUXILIARY GYMNASIUM

1050 NEROLY RD,
OAKLEY, CA 94561

LIBERTY UNION HIGH SCHOOL DISTRICT

REVISIONS

DSA APP NO. 01-119278

ZFA NO:	20315
ENGR / PM:	KNC / DLD
DRAWING SCALE:	As indicated
PTN: 61721-78	FILE NO: 7-H4

BID DOCUMENT

APRIL 27, 2021

SHEET TITLE

STEEL TRUSS ELEVATION AND DETAILS

SHEET NUMBER

S-M5.2

C:\revit_local\20315_FREEDOM_S20C_kylee@zfa.com.rvt
4/27/2021 11:13:40 AM

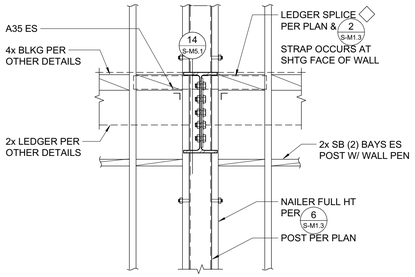

12 LEDGER SPLICE AT BEAM
3/4" = 1'-0"

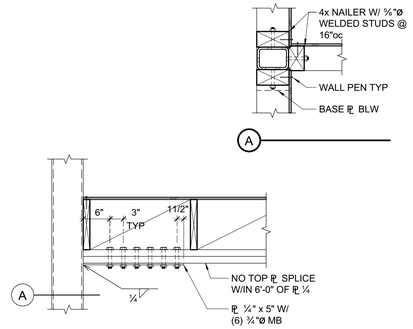

9 TOP PLATE TIE AT HSS COLUMN
3/4" = 1'-0"

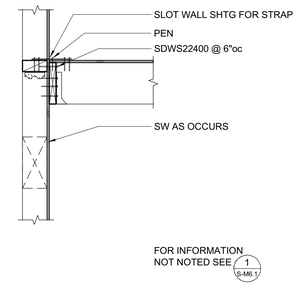

5 LEDGER AT EXTERIOR SHEAR WALL
3/4" = 1'-0"

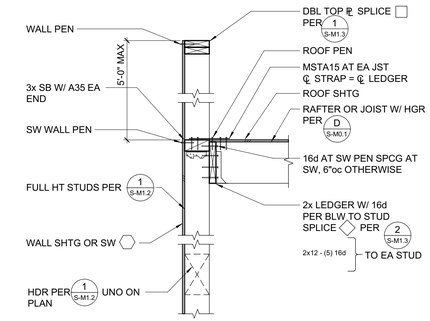

1 WALL ANCHORAGE AT EXTERIOR WALL
3/4" = 1'-0"

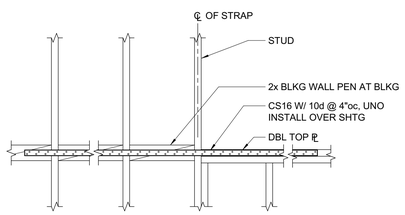

13 STRAP TIE ELEVATION
3/4" = 1'-0"

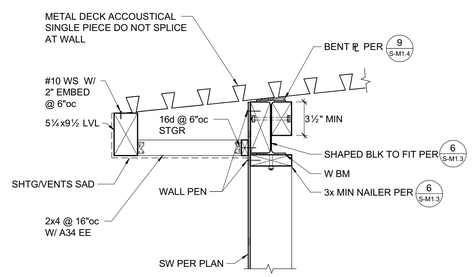

10 METAL DECK AT WOOD SHEAR WALL
3/4" = 1'-0"

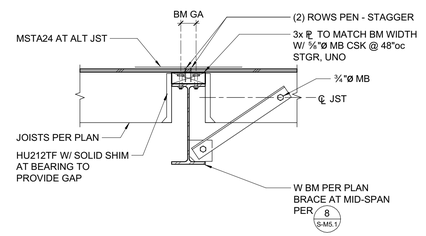

6 FRAMING AT BEAM
3/4" = 1'-0"

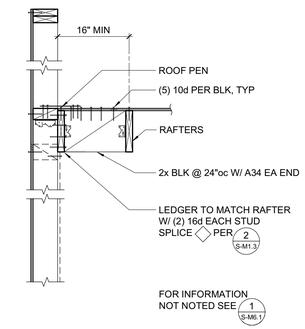

2 PARALLEL FRAMING AT EXTERIOR WALL
3/4" = 1'-0"

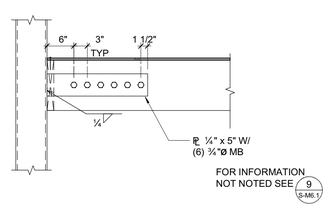

14 RAFTER TIE AT HSS COLUMN
3/4" = 1'-0"

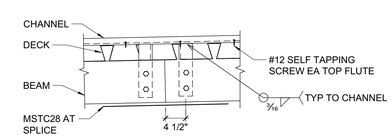

AT BEAM SPLICE

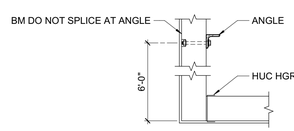

AT CORNER

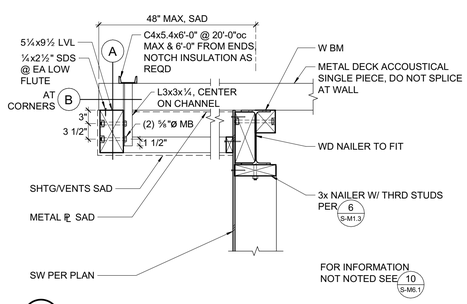

11 METAL DECK AT WOOD SHEAR WALL
3/4" = 1'-0"

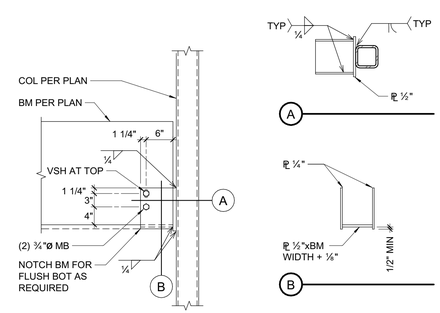

7 BEAM CONNECTION AT HSS COLUMN
3/4" = 1'-0"

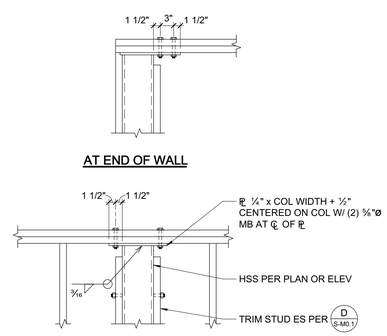

8 HSS COLUMN AT TOP PLATE
3/4" = 1'-0"

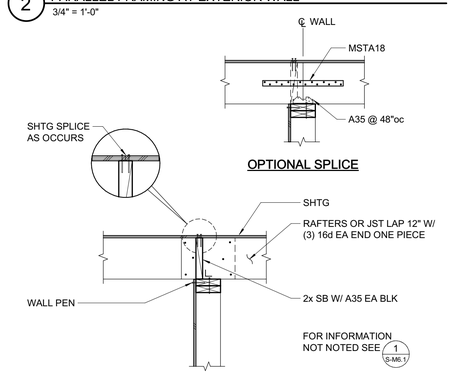

3 INTERIOR SHEAR WALL
3/4" = 1'-0"

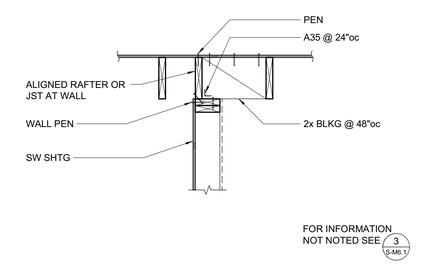

4 INTERIOR SHEAR WALL
3/4" = 1'-0"

QUATTROCCHI KWOK ARCHITECTS
Main:
636 Fifth Street, Santa Rosa, CA 95404
East Bay:
55 Harrison Street, Suite 525
Oakland, CA 94607
(707) 576-0829

ZFA STRUCTURAL ENGINEERS
1212 fourth street | suite z
santa rosa ca 95404
zfa job no. 20315
zfa.com
707.526.0992

copyright © 2020

REGISTERED PROFESSIONAL ENGINEER CHRIS S. WANGSMO STRUCTURAL STATE OF CALIFORNIA

THIS DOCUMENT AND THE IDEAS INCORPORATED HEREIN, AS AN INSTRUMENT OF PROFESSIONAL SERVICE, IS THE PROPERTY OF THE ENGINEER AND IS NOT TO BE USED, IN WHOLE OR IN PART FOR ANY OTHER PROJECT WITHOUT THE PRIOR WRITTEN AUTHORIZATION OF THE ENGINEER.

FREEDOM HIGH SCHOOL

NEW AUXILIARY GYMNASIUM

1050 NEROLY RD,
OAKLEY, CA 94561

LIBERTY UNION HIGH SCHOOL DISTRICT

REVISIONS

DSA APP NO. 01-119278

ZFA NO:	20315
ENGR / PM:	KNC / DLD
DRAWING SCALE:	3/4" = 1'-0"
PTN: 61721-78	FILE NO: 7-H4

BID DOCUMENT

APRIL 27, 2021

SHEET TITLE

WOOD DETAILS

SHEET NUMBER

S-M6.1

C:\revit_local\20315_FREEDOM_S20C_kylec@zfa.com.rvt
4/27/2021 11:13:42 AM

AC UNIT.

MARK	MANUFACTURER	MODEL NUMBER	UNIT SIZE TONS	SUPPLY FAN					COOLING CAPACITY			SEER	ELECTRICAL DATA			ECONOMIZER WEIGHT	UNIT WEIGHT	CURB ISOLATOR WEIGHT	TOTAL WEIGHT	SERVISE	REMARKS
				MIN O.A	MAX O.A	ESP	SUPPLY FAN RPM	AIRFLOW CFM	TOTAL COOLING (MBH)	SENSIBLE COOLING (MBH)	TOTAL HEATING (MBH)		V-Ø-Hz	MCA	MOCP						
AC-1	CARRIER	48HCDD14A3M6-0A3G0	12.5	525	1750	1.30 in-wg	821	5000	151.5	118.5	150	13.90	460-3-60	32.0	40	169	1545 lb	572	2286	AUXILLARY GYMNASIUM 101	2-8, 10
AC-2	CARRIER	48HCDD14A3M6-0A3G0	12.5	525	1750	1.30 in-wg	821	5000	151.5	118.5	150	13.90	460-3-60	32.0	40	169	1545 lb	572	2286	AUXILLARY GYMNASIUM 101	2-8, 10
AC -3	CARRIER	48GCDM06A2A6-0A0A0	5	250	600	1.00 in-wg	2251	2000	63.0	48.3	67	16.00	460-3-60	13.0	15	49	600 lb	365	1014	CLASSROOM 107	1,3-9, 11

REMARKS:

1. VERTICAL SUPPLY/RETURN DUCT CONFIGURATION.
2. HORIZONTAL SUPPLY & VERTICAL RETURN DUCT CONFIGURATION.
3. AUTOMATIC SHUTOFF NOT REQUIRED PER 2019 CMC608 EXEPTION 2 .
4. PROVIDE WITH MERV-13 2" PLEATED FILTER.
5. PROVIDE WITH MICROMETL MODULATING ECONOMIZER WITH DRY BULB TEMPERATURE CONTROL.
6. PROVIDE WITH MICROMETL 14" HIGH BASE SPRING ISOLATION RAIL ROOF CURB. SEE DETAIL A/M-M7.1
8. CO2 ROOM SENSORS FOR DEMAND CONTROL VENTILATION & THERMOSTAT SEE PLANS FOR LOCATION.
9. PROVIDE WITH BAROMETRIC RELIEF.
10. PROVIDE WITH TWO STAGE HEATING INPUT 150/120 MBH, OUTPUT 120/96 MBH
11. PROVIDE WITH TWO STAGE HEATING INPUT 67/50 MBH, OUTPUT 54/40 MBH

SPLIT SYSTEM INDOOR UNIT

MARK	MFR	MODEL	AIRFLOW	ELECTRICAL DATA			RATED HEATING	SENSIBLE COOLING	RATED MAX COOLING	FILTER	WEIGHT	SERVICE	REMARKS
				V-Ø-HZ	MCA	MOCP							
FC-1	DAIKIN	FFQ09Q2VJU	378 CFM	SEE OUTDOOR UNIT			10000.0 Btu/h	7990.0 Btu/h	11100.0 Btu/h	WASHABLE	36 lb	OFFICE 103	2-5
FC-2	DAIKIN	FTXS18LVJU	484 CFM	SEE OUTDOOR UNIT			21600.0 Btu/h	18000.0 Btu/h	14790.0 Btu/h	WASHABLE	31 lb	ELECTRICAL RM	2-4,6
FC-3	DAIKIN	FTXB09AXVJU	330 CFM	SEE OUTDOOR UNIT			9400.0 Btu/h	7677.0 Btu/h	8800.0 Btu/h	WASHABLE	20 lb	AV RACK IN STORAGE	1-4,6

REMARKS:

1. HIGH TEMPERATURE ALARM NU-TEMP NU-30 BY PAL PRODUCTS, SET AT 90F.
2. SEE B/M-M8.1 FOR CONTROL DIAGRAM
3. PROVIDE WITH PELICAN CONTROLS WIRELESS THERMOSTAT.
4. PROVIDE INDIVIDUAL POWER TO ONE (1)OUTDOOR UNIT.
5. CEILING CASSETT MOUNT PER DETAIL C/M-M7.1
6. WALL MOUNT FAN COIL MOUNT PER DETAIL F/M-M7.1

SUPPLY FAN SCHEDULE

MARK	MFR	MODEL NO	AIRFLOW	V-Ø-HZ	WATTS	AMPS	WEIGHT	REMARKS
SF 1	PANASONIC	FV-15NLFS1	50 CFM	120-1-60	10 W	0.2 A	17 lb	1,2

REMARKS:

1. PROVIDE WITH 1" MERV 13 FILTERS.
2. INTERLOCK WITH FAN COIL

SPLIT SYSTEM OUTDOOR UNIT

MARK	MFR.	MODEL NO.	EER	ELECTRICAL DATA			WEIGHT	SERVICE	REMARKS
				V-Ø-HZ	MCA	MOCP			
HP-1	DAIKIN	RX09RMVJU	13	208-1-60	9	15	60	FC 1	1-7
HP-2	DAIKIN	RXS18LVJU	12.7	208-1-60	13.75	20	104	FC 2	1-7
HP-3	DAIKIN	RXB09AXVJU	11	208-1-60	7	15	53	FC 3	1-7

REMARKS:

1. COORDINATE WITH FAN COIL UNIT.
2. BALL BEARING FAN MOTOR.
3. COMPRESSOR START ASSIST CAPACITOR AND RELAY.
4. FREEZE-STAT.
5. LOW-AMBIENT PRESSURE SWITCH AND WINTER START CONTROL.
6. PROVIDE WITH R-410A REFRIGERANT
7. MOUNT ON ROOF PER DETAIL B/M-M7.1

EXHAUST FAN SCHEDULE

MARK	MFR	MODEL NO	AIRFLOW	FAN RPM	INLET SONES	ELECTRICAL DATA				WEIGHT	SERVICE	REMARKS
						MOTOR HP	OPER. HP	WATTS	V-Ø-Hz			
EF 1	PANASONIC	FV-0511VKS2	80 CFM	795	0.3	-		10 W	120-1-60	11.90 lb	JAN 104	1-3
EF 2	PANASONIC	FV-0511VKS2	80 CFM	795	0.3	-		10 W	120-1-60	11.90 lb	UBISEX TOILET 106	1-3
EF 3	PANASONIC	FV-0511VKS2	80 CFM	795	0.3	-		10 W	120-1-60	11.90 lb	UBISEX TOILET 105	1-3

REMARKS:

1. INTERLOCK WITH LIGHT SWITCH (BY ELEC.)
2. PROVIDE OEM ACCESSORY OCCUPANCY SENSOR.
3. EXHAUST MOUNTED PER DETAIL E/M-M7.1

Mechanical Ventilation.

ROOM #	ROOM NAME	SF	Occupant Density (People per 1000 sq.ft.)	ASHRAE 62.1 OCCUPANCY	DESIGN OSA
101	AUXILLARY GYMNASIUM	6946	100	62-Educational Facilities - Multiuse Assembly	3500
102	HALLWAY	132	0	62-General - Corridor	0
103	OFFICE	95	5	62-Office Buildings - Office Space	25
107	CLASSROOM	1564	35	62-Educational Facilities - Classrooms Age 9 Plus	600

Applicable Code: 2019 CBC 02/05/2020 Revised: 02/14/2020

MEP Componet Anchorage Note

All mechanical, plumbing, and electrical components shall be anchored and installed per the details on the DSA-approved construction documents. The following components shall be anchored or braced to meet the force and displacement requirements prescribed in the 2019 CBC Sections 1617A.1.18 through 1617A.1.26 and ASCE 7-16 Chapters 13, 26, and 30:

1. All permanent equipment and components.
2. Temporary, movable or mobile equipment that is permanently attached (e.g. hard wired) to the building utility services such as electricity, gas or water. "Permanently attached" shall include all electrical connections except plugs for 110/220 volt receptacles having a flexible cable.
3. Temporary, movable or mobile which is heavier than 400 pounds or has a center of mass located 4 feet or more above the adjacent floor or roof level that directly support the component is required to be restrained in a manner approved by DSA.

The following mechanical and electrical components shall be positively attached to the structure but need not demonstrate design compliance with the references noted above. These components shall have flexible connections provided between the component and associated ductwork, piping, and conduit. Flexible connections must allow movement in both trasverse and longitudinal directions:

A. Components weighing less than 400 pounds and having a center of mass located 4 feet or less above the adjacent floor or roof level that directly support the component.

B. Components weighing less than 20 pounds, or in the case of distributed systems, less than 5 pounds per foot, which are suspended from a roof or floor or hung from a wall.

The anchorage of all mechanical, electrical and plumbing components shall be subject to the approval of the design professional in general responsible charge of structural engineer delegated responsibility and acceptance by DSA. The project inspector will verify that all components and equipment have been anchored in accordance with the above requirements.

Piping, Ductwork, and Electrical Distribution System Bracing Note

Piping, ductwork, and electrical distribution systems shall be braced to comply with the forces and displacements prescribed in ASCE 7-16 Section 13.3 as defined in ASCE 7-16 Sections 13.6.5, 13.6.6, 13.6.7, 13.6.8; and 2019 CBC, Sections 1617A.1.24, 1617A.1.25 and 1617A.1.26.

The method of showing bracing and attachments to the structure for the identified distribution system are as noted below. When bracing and attachments are based on a preapproved installation guide (e.g., OSHPD OPM for 2013 CBC or later), copies of the bracing system installation guide or manual shall be available on the jobsite prior to the start of and during the haging and bracing of the distribution systems. The Structural Engineer of Record shall verify the adequacy of the structure to support the hanger and brace loads.

Mechanical Piping (MP), Mechanical Ducts (MD), Plumbing Piping (PP), Electrical Distribution Systems (E):

MP☐ MD☐ PP☐ E☐ Option 1: Detailed on the approved drawings with project specific notes and details

MP☒ MD☒ PP☐ E☐ Option 2: Shall comply with the applicable OSHPD Pre-Approval (OPM #) # OPM-0043-13

APPLICABLE GOVERNING CODES:

2019 CALIFORNIA BUILDING CODE
2019 CALIFORNIA ELECTRICAL CODE
2019 CALIFORNIA MECHANICAL CODE
2019 CALIFORNIA PLUMBING CODE
2019 CALIFORNIA ENERGY CODE
2019 CALIFORNIA FIRE CODE
2019 CALIFORNIA GREEN BUILDING STANDARDS

MECHANICAL LEGEND

SYMBOL	ABBREVIATION	DESCRIPTION
X / X		EQUIPMENT TYPE / EQUIPMENT NUMBER
X / X-X		DETAIL / DRAWING NUMBER / SHEET NUMBER
	SA OR OA	SECTION THRU SUPPLY AIR OR OUTSIDE AIR DUCT
	RA	SECTION THRU RETURN AIR DUCT
	EXH	SECTION THRU EXHAUST AIR DUCT
		ROUND DUCT DOWN
DN	DN OR UP	SLOPE DUCT DOWN OR UP IN DIRECTION OF FLOW
	AL	ACOUSTICAL LINING
	FC	FLEXIBLE DUCT CONNECTION
	VD	VOLUME DAMPER
	FD	FIRE DAMPER
	FSD	FIRE SMOKE DAMPER
	TV	TURNING VANES
		FLEXIBLE DUCT
		45° ROUND DUCT TAKE-OFF
		45° RECTANGULAR DUCT TAKE-OFF
		90° TURN - ROUND DUCT
		90° RADIUS TURN - ROUND OR RECTANGULAR DUCT
		SQUARE TO ROUND DUCT TRANSITION
		DUCT TRANSITION
		RECTANGULAR DUCT 90° SPLIT
T		THERMOSTAT @ 48" AFF TO TOP OF T-STAT, MAX
	AP	ACCESS PANEL
	POC	POINT OF CONNECTION
	UTR	UP THRU ROOF
	UIW	UP IN WALL
	BHP	BRAKE HORSEPOWER
	HP	HORSEPOWER
	SAD	SEE ARCHITECTURAL DRAWINGS
	SSD	SEE STRUCTURAL DRAWINGS
	SCD	SEE CIVIL DRAWINGS
	AFC	ABOVE FINISH CEILING

AIR TERMINAL SCHEDULE

MANUFACTURER: TITUS (EXCEPT AS NOTED)

S-DL		DRUM LOUVER	S-DL (SV) - ROTATING DRUM WITH CURVED FRAME. HORIZONTAL BLADES, WITH AIR SCOOP VOLUME EXTRACTOR . WHITE FINISH
CD-1		CEILING DIFFUSER	TDC - COMPLETE WITH EQUALIZING GRID, THROW-REDUCING VANES, STEEL CONSTRUCTION
WR		WALL RETURN GRILLE	350ZRL - LOUVERS ON 3/4" CENTERS, STEEL CONSTRUCTION, LOUVERS PARALLEL WITH LONG DIMENSION
EG		EXHAUST GRILLE CEILING RETURN	50F - 1/2" x 1/2" x 1/2" EGGCRATE, ALUMINUM CORE WITH ALUMINUM GRID
CR		CEILING RETURN	50F - 1/2" x 1/2" x 1/2" EGGCRATE, ALUMINUM CORE WITH ALUMINUM GRID

NOTES:
1. ADAPTER NEEDED FOR TRANSITION FROM SQUARE NECK TO ROUND DUCT.
2. SIZE (NECK/FACE) TYPE CFM (NO. OF THROW) FACE SIZE FOR T-BAR CEILING ONLY

QUATTROCCHI KWOK ARCHITECTS
Main Office:
636 Fifth Street, Santa Rosa, CA 95404
East Bay:
55 Harrison Street, Suite 525,
Oakland, CA 94607
(707) 576-0829

SIGNED: OCTOBER 30, 2020

COSTA ENGINEERS INC.
3274 Villa Lane Napa, Ca 94558 ph. 707-252-9177 fax: 707-252-9473

REGISTERED PROFESSIONAL ENGINEER
CHRISTOPHER J. DEL CORE
No. 33000
Exp. 12-31-20
MECHANICAL
STATE OF CALIFORNIA

FREEDOM HIGH SCHOOL

NEW AUXILIARY GYMNASIUM

1050 NEROLY RD,
OAKLEY, CA 94561

LIBERTY UNION HIGH SCHOOL DISTRICT

DSA APP NO. 01-119278

ARCH PROJECT NO: 1869.00
DRAWN BY: MQ/RE
DRAWING SCALE:
PTN: 61721-78 FILE NO: 7-H4

BID DOCUMENT

APRIL 27, 2021

SHEET TITLE

MECHANICAL LEGENDS & SCHEDULES

SHEET NUMBER

M-M1.1

4/27/2021 11:53:07 AM C:\Users\robert\Documents\20053 Freedom HS Auxiliary Gym RVT18_rengland@costaengineers.com.rvt

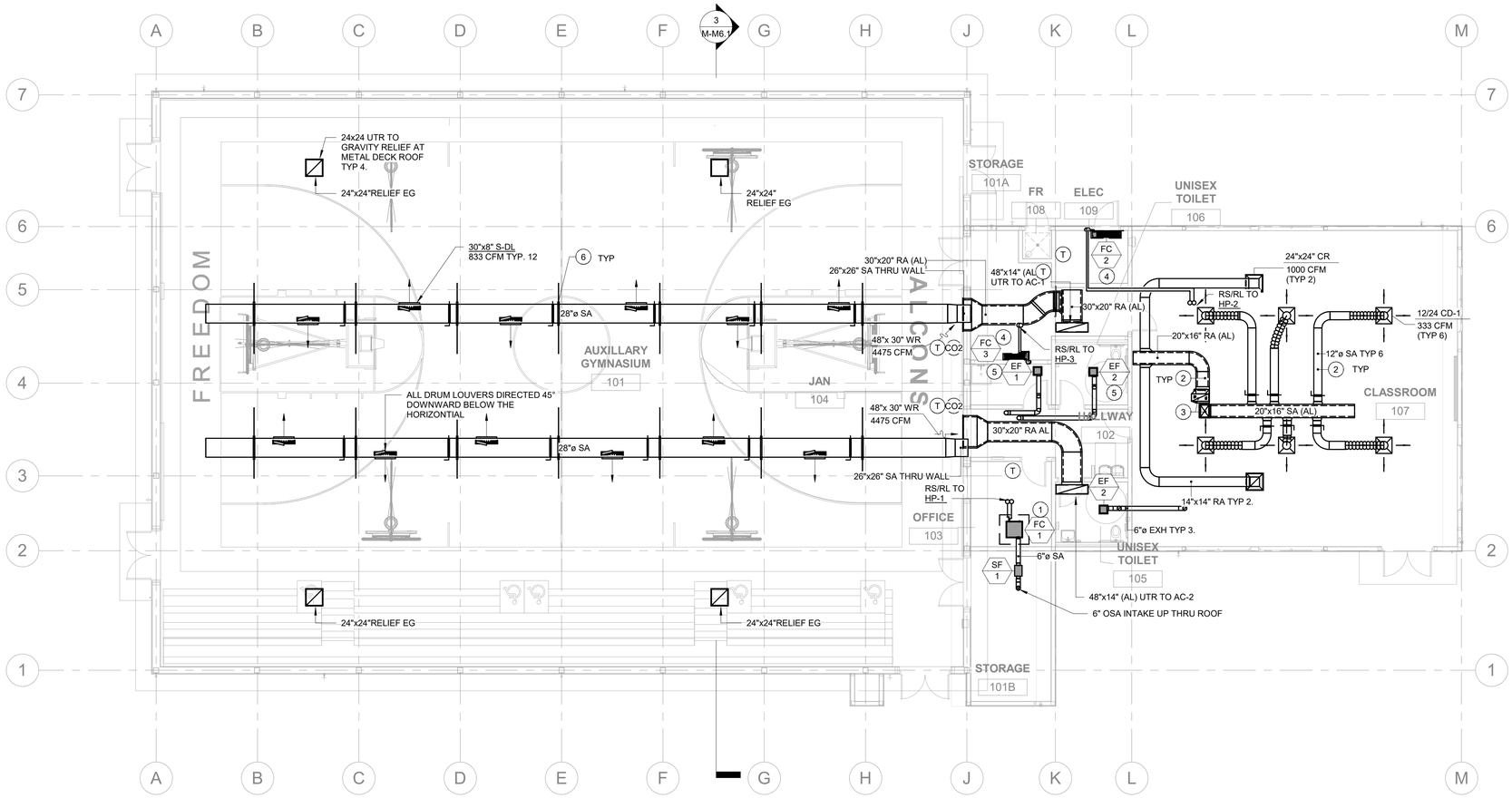

1 AUXILIARY GYM - MECHANICAL FLOOR PLAN

1/8" = 1'-0"

NORTH

0 4' 8' 16'

GENERAL NOTES

A. FOR MECHANICAL GENERAL NOTES, LEGENDS, AND SYMBOLS, REFER TO SHEET M-M1.1

B. MECHANICAL CONTRACTOR SHALL BE RESPONSIBLE FOR COORDINATING THE MECHANICAL WORK WITH OTHER TRADES. MAKE ANY OFFSETS AS REQUIRED TO AVOID CONFLICT WITH PIPING, LIGHT FIXTURES, SKYLIGHTS, ETC.

C. CONTRACTOR SHALL COORDINATE ALL GRILLE LOCATIONS AND CEILING TYPES PRIOR TO ORDERING GRILLES, SEE ARCHITECTURAL CEILING PLANS AND ELECTRICAL LIGHTING PLANS.

D. WHERE BRACING DETAILS ARE NOT SHOWN ON THE DRAWING OR IN THE GUIDELINES, THE FIELD INSTALLATION SHALL BE SUBJECT TO THE APPROVAL OF THE ARCHITECT, MECHANICAL ENGINEER AND FIELD INSPECTOR OF THE GOVERNING AUTHORITY.

SHEET NOTES

1. CEILING CASSETTE FAN COIL; SEE SCHEDULE FOR PAIRED HEAT PUMP. MOUNTED PER DETAIL C/M-M7.1
2. FOR TYPICAL DUCT SUPPORT SEE DETAIL A/M-M7.3
3. 20"x16" SA (AL) & 16"x20" RA (AL) UTR TO AC-3. FOR DUCT THRU ROOF SEE DETAIL B/M-M7.2
4. WALL MOUNTED FAN COIL; SEE SCHEDULE FOR PAIR CONDENSING UNIT OR HEAT PUMP. FOR MOUNT DETAIL IN STUD WOOD WALL SEE DETAIL F/M-M7.1
5. CEILING EXHAUST FAN WITH 6" DUCT UTR. FOR MOUNTING DETAIL SEE E/M-M7.1
6. EXPOSED ROUND DUCT AT GYM. SUPPORT AT EVERY FLANGE OR CHANNEL. MOUNT PER DETAIL A/M-M7.4

WALL LEGENDS

NOTES:
S.S.D. FOR WOOD FRAMING SIZES FOR ALL BEARING WALLS. ALL OTHER WALLS ARE 2X6 WOOD STUDS U.O.N.

WOOD FRAMING - NON RATED

KEYPLAN

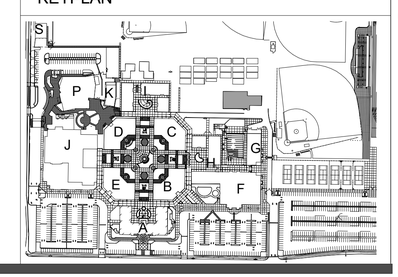

QUATTROCCHI KWOK ARCHITECTS
Main Office:
636 Fifth Street, Santa Rosa, CA 95404
East Bay:
55 Harrison Street, Suite 525,
Oakland, CA 94607
(707) 576-0829

SIGNED: OCTOBER 30, 2020

COSTA ENGINEERS INC.
3274 Villa Lane Napa, Ca 94558 ph. 707-252-9177 fax. 707-252-8473

REGISTERED PROFESSIONAL ENGINEER CHRISTOPHER J. DEL CORE No. 33000 Exp. 12-31-20 MECHANICAL STATE OF CALIFORNIA

FREEDOM HIGH SCHOOL

NEW AUXILIARY GYMNASIUM

1050 NEROLY RD, OAKLEY, CA 94561

LIBERTY UNION HIGH SCHOOL DISTRICT

DSA APP NO. 01-119278

ARCH PROJECT NO:	1869.00
DRAWN BY:	MQ/RE
DRAWING SCALE:	1/8" = 1'-0"
PTN: 61721-78	FILE NO: 7-H4

BID DOCUMENT

APRIL 27, 2021

SHEET TITLE

MECHANICAL FLOOR PLAN

SHEET NUMBER

M-M2.1

4/27/2021 11:53:10 AM C:\Users\robert\Documents\20053 Freedom HS Auxiliary Gym RVT18_rengland@costaengineers.com.rvt

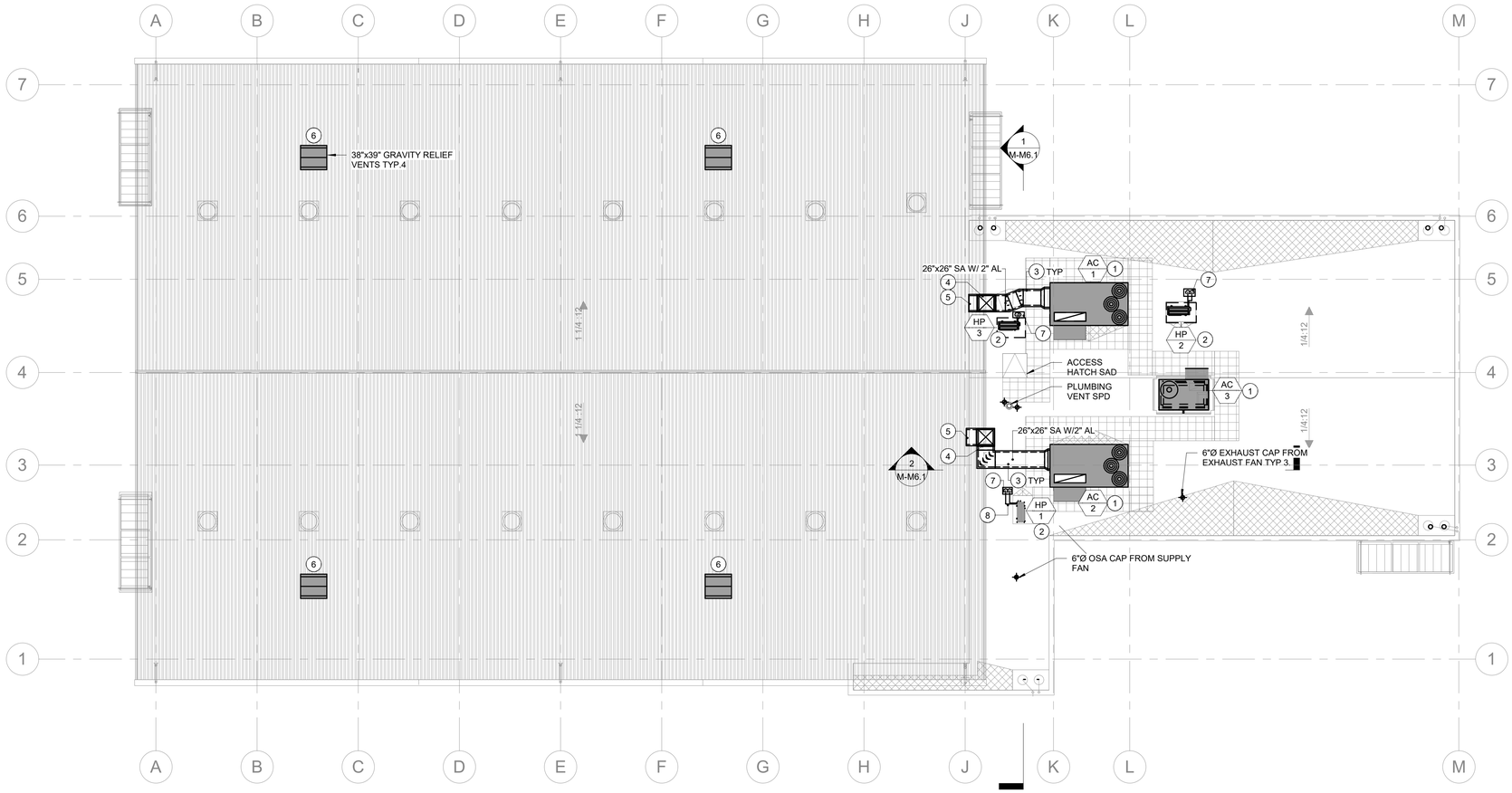

1 AUXILIARY GYM - MECHANICAL ROOF PLAN

1/8" = 1'-0"

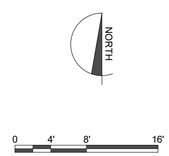

GENERAL NOTES

A. FOR MECHANICAL GENERAL NOTES, LEGENDS, AND SYMBOLS, REFER TO SHEET M-M1.1

B. MECHANICAL CONTRACTOR SHALL BE RESPONSIBLE FOR COORDINATING THE MECHANICAL WORK WITH OTHER TRADES. MAKE ANY OFFSETS AS REQUIRED TO AVOID CONFLICT WITH PIPING, LIGHT FIXTURES, SKYLIGHTS, ETC.

C. CONTRACTOR SHALL COORDINATE ALL GRILLE LOCATIONS AND CEILING TYPES PRIOR TO ORDERING GRILLES, SEE ARCHITECTURAL CEILING PLANS AND ELECTRICAL LIGHTING PLANS.

D. WHERE BRACING DETAILS ARE NOT SHOWN ON THE DRAWING OR IN THE GUIDELINES, THE FIELD INSTALLATION SHALL BE SUBJECT TO THE APPROVAL OF THE ARCHITECT, MECHANICAL ENGINEER AND FIELD INSPECTOR OF THE GOVERNING AUTHORITY.

SHEET NOTES

1. AC UNIT MOUNTED IN PRE-FABRICATED MICROMENTL ISOLATION CURB. FOR MOUNTING DETAIL SEE A/M-M7.1
2. HEAT PUMP OR CONDENSING UNIT, MOUNTED ON WOOD SLEEPER. FOR MOUNTING DETAIL SEE B/M-M7.1
3. DUCT MOUNTED ON WOOD SLEEPER. FOR MOUNTING DETAIL SEE D/M-M7.1
4. EXPOSED DUCT UP ALONG EXTERIOR WALL AND THRU WALL SEE DETAIL A/M-M7.2
5. DUCT THRU EXTERIOR WALL SEE DETAIL B/M-M7.2
6. GRAVITY RELIEF ON METAL DECK ROOF SEE DETAIL C/M-M7.2
7. REFRIGERANT PIPE THRU ROOF SEE DETAIL D/M-M7.2
8. REFRIGERANT PIPE ON ROOF SEE DETAIL E/M-M7.2

WALL LEGENDS

NOTES:
S.S.D. FOR WOOD FRAMING SIZES FOR ALL BEARING WALLS. ALL OTHER WALLS ARE 2X6 WOOD STUDS U.O.N.

WOOD FRAMING - NON RATED

KEYPLAN

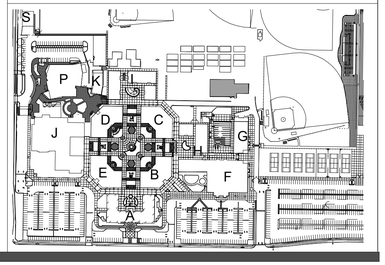

QUATTROCCHI KWOK ARCHITECTS
Main Office:
636 Fifth Street, Santa Rosa, CA 95404
East Bay:
55 Harrison Street, Suite 525,
Oakland, CA 94607
(707) 576-0829

SIGNED: OCTOBER 30, 2020

COSTA ENGINEERS INC.
3274 Villa Lane Napa, Ca 94558 p: 707-252-9177 fax: 707-252-9473

REGISTERED PROFESSIONAL ENGINEER
CHRISTOPHER J. DEL CORE
No. 33000
Exp. 12-31-20
MECHANICAL
STATE OF CALIFORNIA

FREEDOM HIGH SCHOOL

NEW AUXILIARY GYMNASIUM

1050 NEROLY RD,
OAKLEY, CA 94561

LIBERTY UNION HIGH SCHOOL DISTRICT

DSA APP NO. 01-119278

ARCH PROJECT NO:	1869.00
DRAWN BY:	MQ/RE
DRAWING SCALE:	1/8" = 1'-0"
PTN: 61721-78	FILE NO: 7-H4

BID DOCUMENT

APRIL 27, 2021

SHEET TITLE

MECHANICAL ROOF PLAN

SHEET NUMBER

M-M3.1

4/27/2021 11:53:11 AM C:\Users\robert\Documents\20053 Freedom HS Auxiliary Gym RVT18_rengland@costaengineers.com.rvt

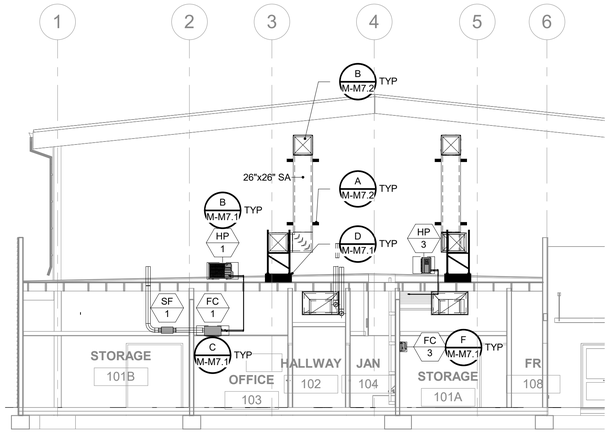

1 MECHANICAL ROOF SECTION THRU GYM

1/8" = 1'-0"

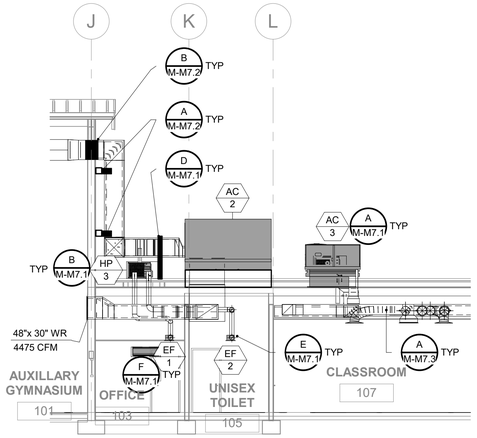

2 MECHANICAL ROOF SECTION THRU EXTERIOR GYM WALL

1/8" = 1'-0"

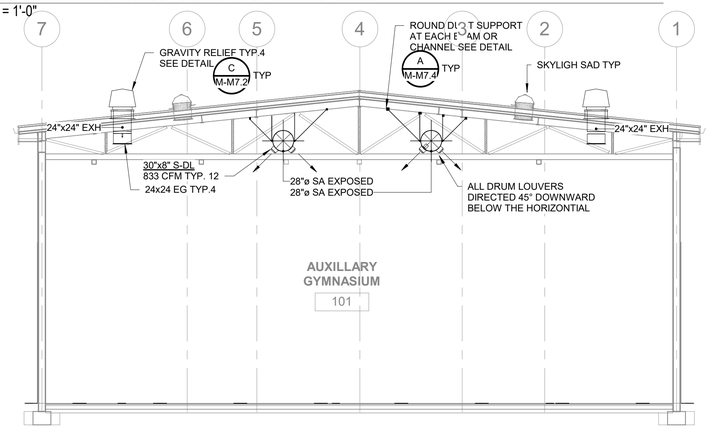

3 MECHANICAL SECTION

1/8" = 1'-0"

QUATTROCCHI KWOK
ARCHITECTS

Main Office:
636 Fifth Street, Santa Rosa, CA 95404
East Bay:
55 Harrison Street, Suite 525,
Oakland, CA 94607
(707) 576-0829

SIGNED: OCTOBER 30, 2020

COSTA ENGINEERS INC.
3274 Villa Lane Napa, Ca 94558 ph. 707-252-9177 fax: 707-252-9473

REGISTERED PROFESSIONAL ENGINEER
CHRISTOPHER J. DEL CORE
No. 33000
Exp. 12-31-20
MECHANICAL
STATE OF CALIFORNIA

FREEDOM
HIGH SCHOOL

NEW AUXILIARY
GYMNASIUM

1050 NEROLY RD,
OAKLEY, CA 94561

LIBERTY UNION
HIGH SCHOOL
DISTRICT

DSA APP NO. 01-119278

ARCH PROJECT NO:	1869.00
DRAWN BY:	MQ
DRAWING SCALE:	1/8" = 1'-0"
PTN: 61721-78	FILE NO: 7-H4

BID DOCUMENT

APRIL 27, 2021

SHEET TITLE

MECHANICAL
SECTIONS

SHEET NUMBER

M-M6.1

4/27/2021 11:53:13 AM C:\Users\robert\Documents\20053 Freedom HS Auxiliary Gym RVT18_rengland@costaengineers.com.rvt

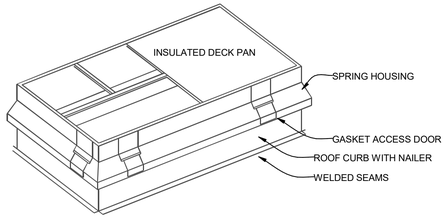

QTY OF ANCHORS				
CURB HEIGHT	EA. LONG SIDE	EA. SHORT SIDE	EA. CORNER	TOTAL
UP TO 14"	12	5	8	66
UP TO 24"	12	5	10	74
UP TO 36"	13	4	12	82

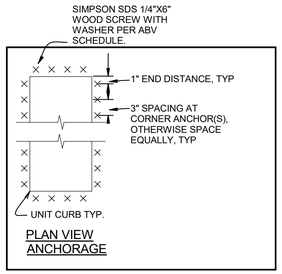

PLAN VIEW ANCHORAGE

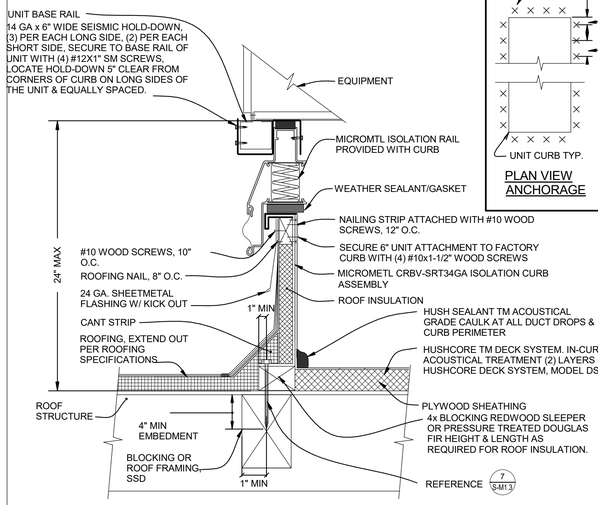

A AC MOUNTING ON ROOF DETAIL

SCALE: NONE

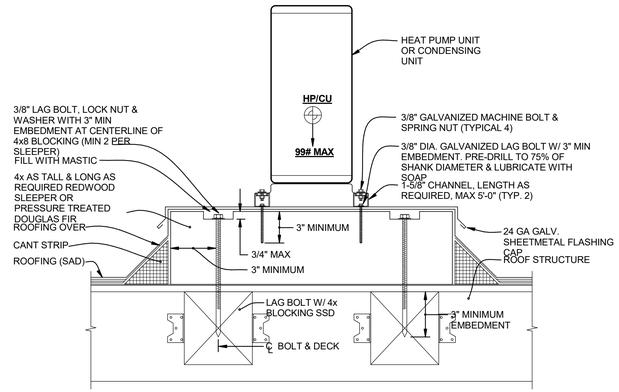

B HP/CU UNIT MOUNTING DETAIL

SCALE: NONE

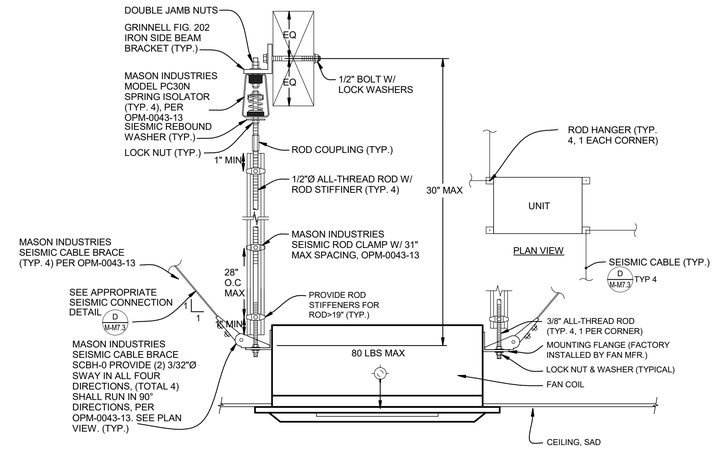

NOTE: SEISMIC BRACING NOT REQUIRED IF TOP OF UNIT ATTACHMENT IS LESS THAN 12" FROM ATTACHEMNT TO STRUCTURE

C CEILING CASSETTE FC MOUNTING DETAIL

SCALE: NONE

DUCT SUPPORT 6 FEET ON CENTER AND EVERY CHANGE OF DIRECTION.

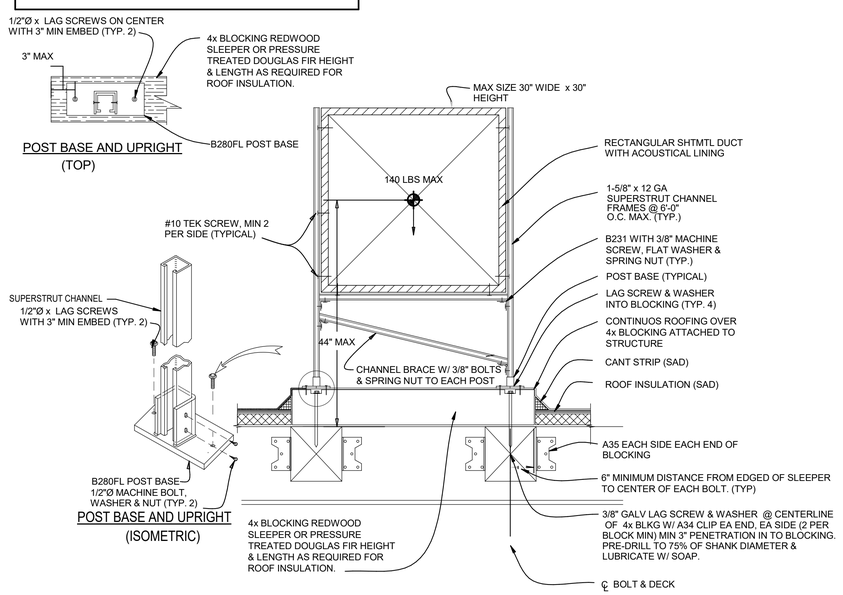

D DUCT ON ROOF MOUNTING DETAIL

SCALE: NONE

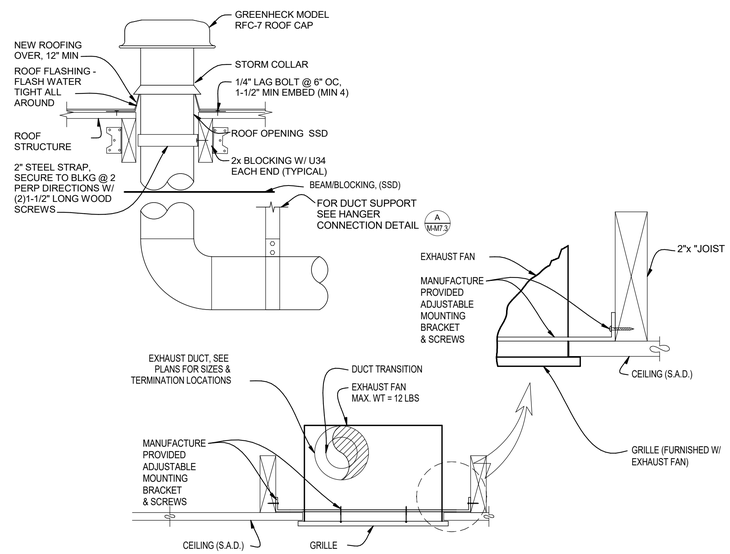

E EXHAUST FAN MOUNTING DETAIL

SCALE: NONE

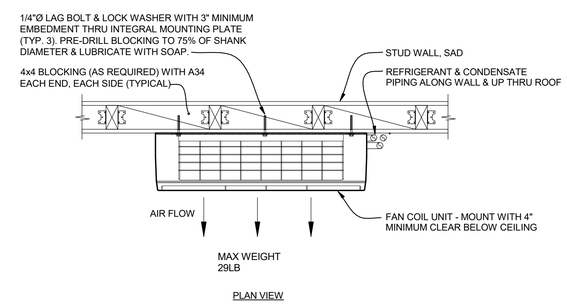

(STUD WALL CONSTRUCTION)

F WALL FAN COIL MOUNTING DETAIL

SCALE: NONE

QUATTROCCHI KWOK ARCHITECTS

Main Office:
636 Fifth Street, Santa Rosa, CA 95404
East Bay:
55 Harrison Street, Suite 525,
Oakland, CA 94607
(707) 576-0829

SIGNED: OCTOBER 30, 2020

COSTA ENGINEERS INC.
3274 Villa Lane Napa, Ca 94558 ph. 707-252-9177 fax: 707-252-9473

REGISTERED PROFESSIONAL ENGINEER CHRISTOPHER J. DEL CORE No. 33000 Exp. 12-31-20 MECHANICAL STATE OF CALIFORNIA

FREEDOM HIGH SCHOOL

NEW AUXILIARY GYMNASIUM

1050 NEROLY RD, OAKLEY, CA 94561

LIBERTY UNION HIGH SCHOOL DISTRICT

DSA APP NO. 01-119278

ARCH PROJECT NO:	1869.00
DRAWN BY:	MQ
DRAWING SCALE:	
PTN: 61721-78	FILE NO: 7-H4

BID DOCUMENT

APRIL 27, 2021

SHEET TITLE

MECHANICAL DETAILS

SHEET NUMBER

M-M7.1

4/27/2021 11:53:14 AM C:\Users\robert\Documents\20053 Freedom HS Auxiliary Gym RVT18_renglard@costaengineers.com.rvt

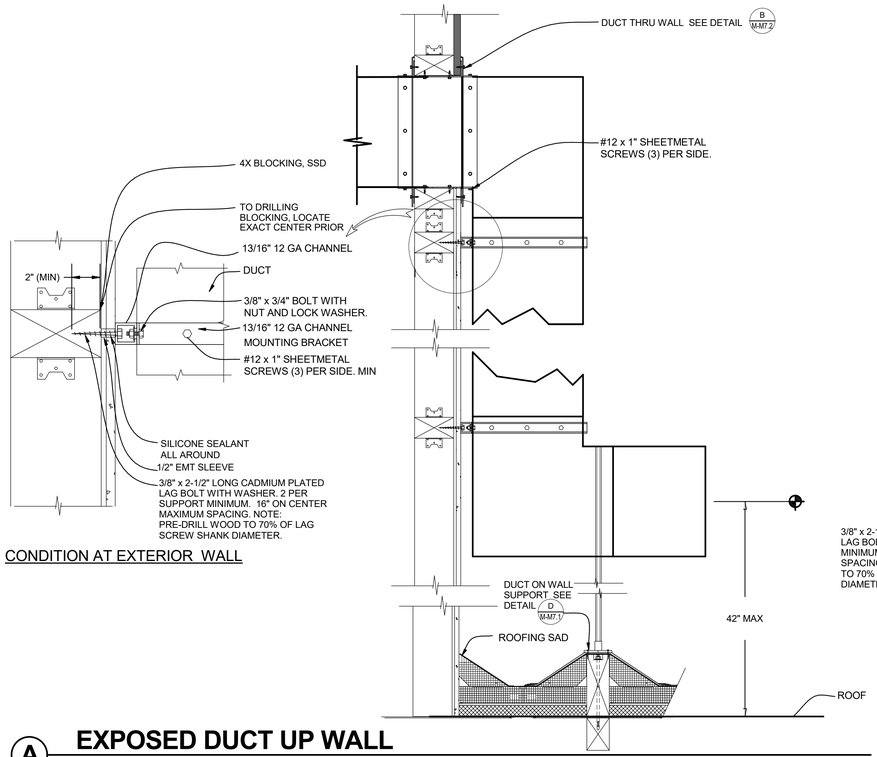

A EXPOSED DUCT UP WALL

SCALE: NONE

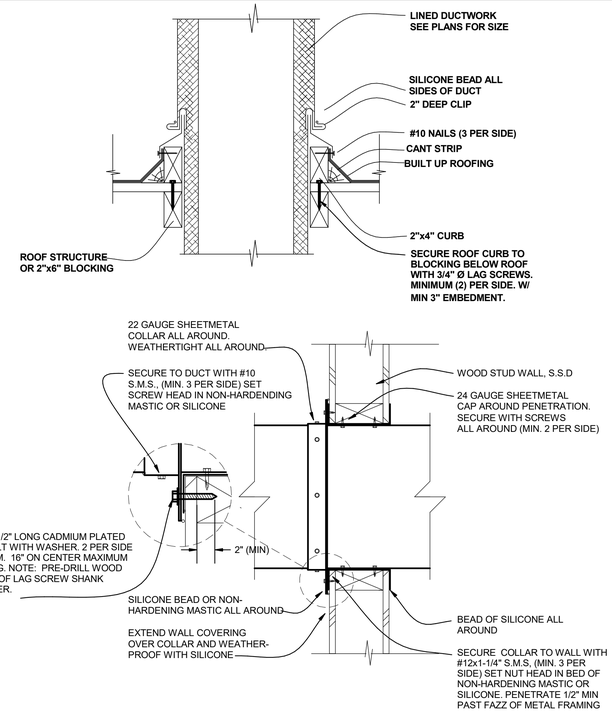

B DUCT PENETRATIONS

SCALE: NONE

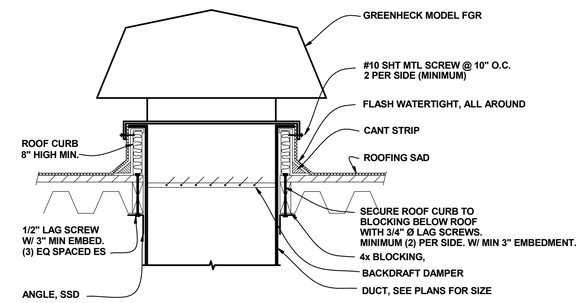

C TYPICAL GRAVITY RELIEF

SCALE: NONE

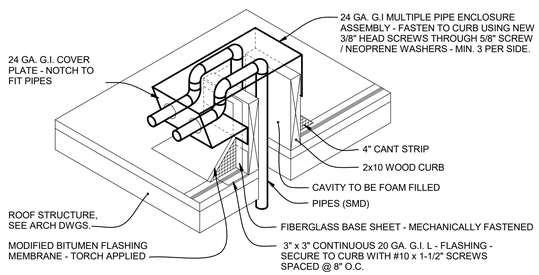

NOTES:

1. ALL PIPES ENTERING THE PIPE ENCLOSURE ASSEMBLY SHALL BE SLOPED UPWARD AS THEY ENTER THE FLASHING SO THAT WATER WILL NOT BE ABLE TO RUN INTO THE BUILDING.
2. WHERE SURFACE IS GRAVEL, SPUD BACK GRAVEL TO ALLOW INSTALLATION OF MODIFIED BITUMEN FLASHING PLY. SURFACE FLASHING PLY WITH ALUMINUM COATING.
3. CLEAN AND PRIME THE ENTIRE TIE-IN AREA.

D PIPE ENCLOSURE DETAIL

SCALE: NONE

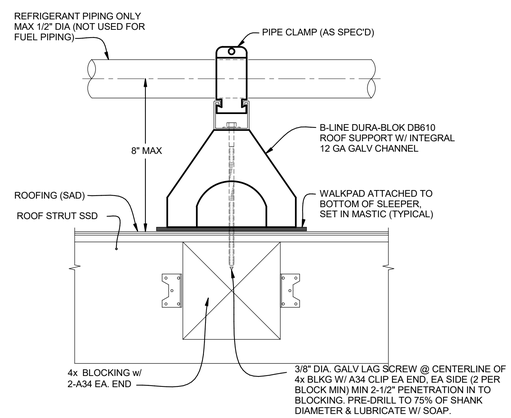

NOTE: SUPPORTS SHALL BE AT 8'-0" ON CENTER & AT ALL CHANGE OF DIRECTION

E PIPING SUPPORT ON ROOF DETAIL

SCALE: NONE

QUATTROCCHI KWOK ARCHITECTS

Main Office:
636 Fifth Street, Santa Rosa, CA 95404
East Bay:
55 Harrison Street, Suite 525,
Oakland, CA 94607
(707) 576-0829

SIGNED: OCTOBER 30, 2020

COSTA ENGINEERS INC.
3274 Villa Lane Napa, Ca 94558 ph. 707-252-9177 fax: 707-252-9473

REGISTERED PROFESSIONAL ENGINEER
CHRISTOPHER J. DEL CORE
No. 33000
Exp. 12-31-20
MECHANICAL
STATE OF CALIFORNIA

FREEDOM HIGH SCHOOL

NEW AUXILIARY GYMNASIUM

1050 NEROLY RD,
OAKLEY, CA 94561

LIBERTY UNION HIGH SCHOOL DISTRICT

DSA APP NO. 01-119278

ARCH PROJECT NO:	1869.00
DRAWN BY:	MQ
DRAWING SCALE:	
PTN: 61721-78	FILE NO: 7-H4

BID DOCUMENT

APRIL 27, 2021

SHEET TITLE

MECHANICAL DETAILS

SHEET NUMBER

M-M7.2

4/27/2021 11:53:14 AM C:\Users\robert\Documents\20053 Freedom HS Auxiliary Gym RVT18_rengland@costaengineers.com.rvt

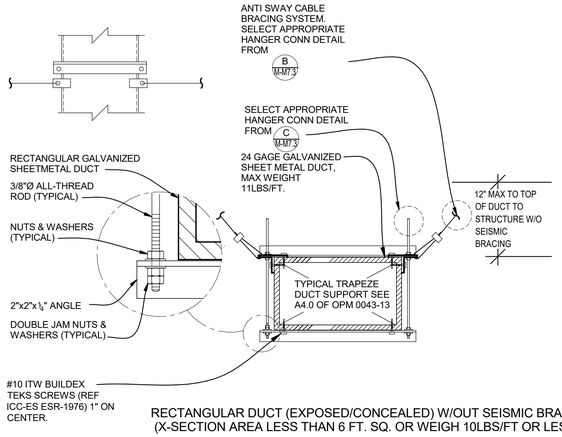

RECTANGULAR DUCT (EXPOSED/CONCEALED) W/OUT SEISMIC BRACING
(X-SECTION AREA LESS THAN 6 FT. SQ. OR WEIGH 10LBS/FT OR LESS)

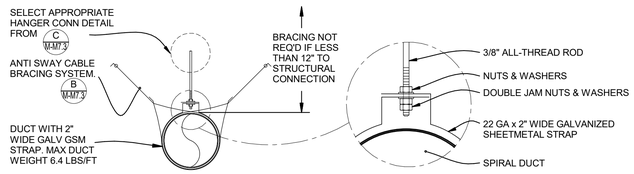

ROUND DUCT (EXPOSED/CONCEALED)
(WITH CROSS-SECTIONAL AREA LARGER THAN 6 SQFT)

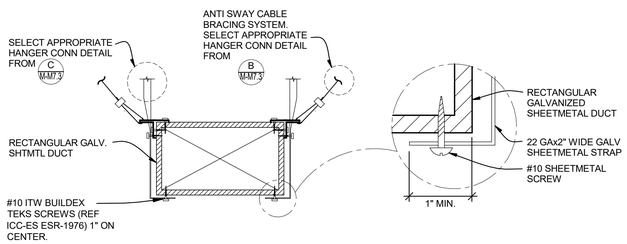

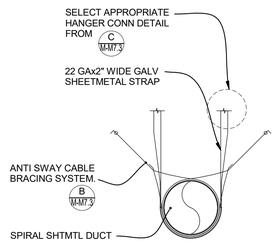

ROUND DUCT (EXPOSED/CONCEALED) (WITH CROSS-SECTIONAL AREA SMALLER THAN 6 SQFT OR WEIGH 10LBS/LF OR LESS) DUCT SUPPORT MAX 10 FT SPACING AND AT ALL CHANGE OF DIRECTION.

DUCT SUPPORT NOTES:

A. ALL STRAPS, RODS, TRAPEZE ANGLES AND TRAPEZE CHANNELS SHALL BE SIZED AND INSTALLED IN ACCORDANCE WITH OPM-0043-13

B. ALL BOLTS, NUTS, SCREWS AND OTHER FASTENING DEVICES SHALL BE LOAD-RATED AND SHALL MEET ALL CODE REQUIREMENTS AND SAFETY FACTORS WHICH APPLY.

C. WIRE, USED IN LIEU OF STRAPS AND RODS, IS NOT ALLOWED

D. WHERE APPLICABLE, INSTALL INSULATION AFTER INSTALLING DUCT HANGERS.

E. SEISMIC BRACING NOT REQUIRED ON RECTANGULAR AND ROUND DUCT WITH CROSS SECTIONAL AREA EQUAL TO 6 sq.ft OR LESS, OR WEIGH 10 lbs/ft OR LESS, AND ARE WITHIN 12" OF STRUCTURE PER OPM 0043-13 PAGE A4.0.

F. SUPPORTS SHALL BE PLACED AT 10'-0" ON CENTER (MAX) FOR ROUND DUCTS AND AT ALL CHANGES IN DIRECTION. RECTANGULAR DUCT SUPPORTS SHALL BE PLACED AT 8'-0" ON CENTER (MAX) AND AT ALL CHANGES IN DIRECTION.

G. DUCTS GREATER THAN 12" FROM STRUCTURE PER OPM 0043-13 PAGE A4.0 SHALL REQUIRE FOUR WAY SEISMIC CABLE SUPPORTS REQUIRED FOR TRAPEZE AT 40' MAX SPACING PER OPM 0043-13 PAGE D4.22. MIN (2) PER DUCT RUN. FOR RECTANGULAR DUCT LESS THAN 10LBS/FT, USE OPM 0043-13 PAGE D4.12. ROUND DUCTS SHALL REQUIRE FOUR WAY SEISMIC CABLE SUPPORTS AT 40 FT MAX SPACING PER OPM 0043-13 PAGE D6.12 MIN (2) PER DUCT RUN.

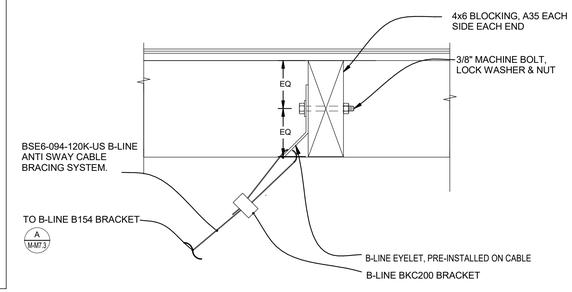

A TYPICAL DUCT SUPPORT DETAIL

SCALE: NTS

B ANTI SWAY CABLE BRACING SYSTEM

SCALE: NONE

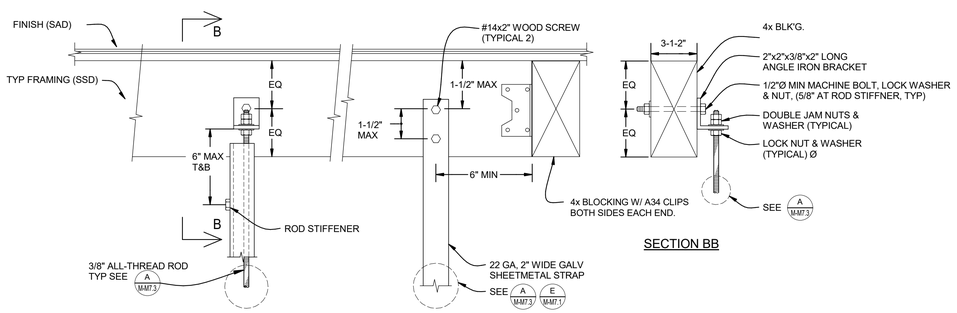

SECTION BB

VERTICAL HANGER CONNECTION TO BLK'G

C HANGER CONNECTION TO WOOD FRAMING

SCALE: NONE

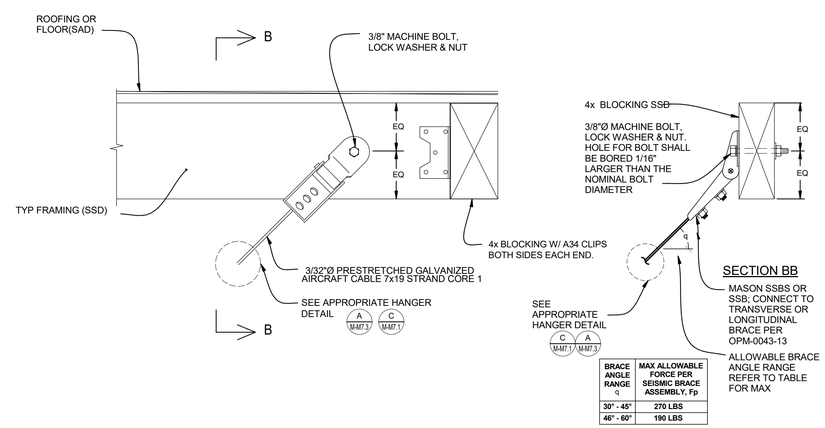

SECTION BB

BRACE ANGLE RANGE q	MAX ALLOWABLE FORCE PER SEISMIC BRACE ASSEMBLY, Fp
30° - 45°	270 LBS
46° - 60°	190 LBS

D SEISMIC BRACING CONNECTIONS TO WOOD FRAMING

SCALE: NONE

QUATTROCCHI KWOK ARCHITECTS
Main Office:
636 Fifth Street, Santa Rosa, CA 95404
East Bay:
55 Harrison Street, Suite 525,
Oakland, CA 94607
(707) 576-0829

SIGNED: OCTOBER 30, 2020

COSTA ENGINEERS INC.
3274 Villa Lane Napa, Ca 94558 ph. 707-252-9177 fax: 707-252-8473

REGISTERED PROFESSIONAL ENGINEER CHRISTOPHER J. DEL CORE No. 33000 Exp. 12-31-20 MECHANICAL STATE OF CALIFORNIA

FREEDOM HIGH SCHOOL

NEW AUXILIARY GYMNASIUM

1050 NEROLY RD,
OAKLEY, CA 94561

LIBERTY UNION HIGH SCHOOL DISTRICT

DSA APP NO. 01-119278

ARCH PROJECT NO: 1869.00
DRAWN BY: MQ
DRAWING SCALE:
PTN: 61721-78 FILE NO: 7-H4

BID DOCUMENT

APRIL 27, 2021

SHEET TITLE

MECHANICAL DETAILS

SHEET NUMBER

M-M7.3

4/27/2021 11:53:14 AM C:\Users\robert\Documents\20053 Freedom HS Auxiliary Gym RVT18_renglund@costaengineers.com.rvt

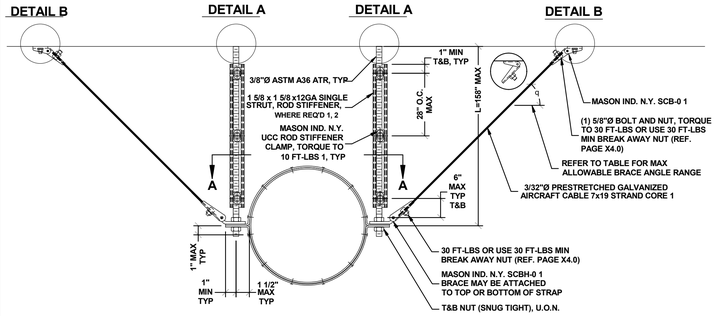

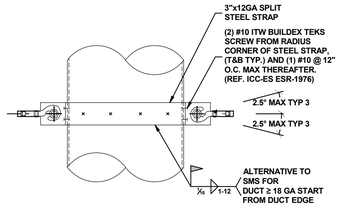

VIEW A-A

BRACING IN LOCATIONS FOR DUCTS >12" FROM STRUCTURE.

BRACE ANGLE RANGE q	MAX ALLOWABLE FORCE PER SEISMIC BRACE ASSEMBLY,
30° - 45°	270 LBS
46° - 60°	190 LBS

NOTES:

1. PROVIDE ROD STIFFENERS ONLY WHERE SEISMIC BRACKETS ARE ATTACHED TO THE ROD AND ROD LENGTH (L) EXCEEDS 18". REF. APPROPRIATE M10 PAGES FOR DETAIL.
3. ANGLE MAY BE INCREASED TO 15°, REF.

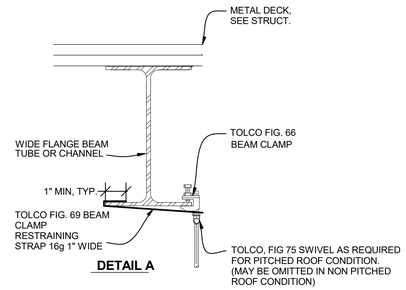

DETAIL A

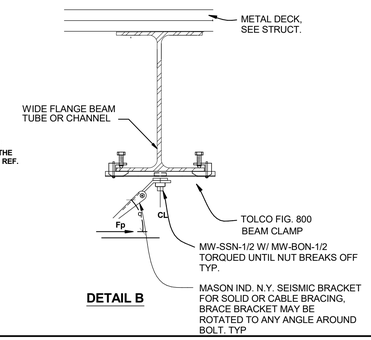

DETAIL B

(A) ROUND SUPPORT DUCT @ GYM

SCALE: NONE

QUATTROCCHI KWOK ARCHITECTS

Main Office:
636 Fifth Street, Santa Rosa, CA 95404
East Bay:
55 Harrison Street, Suite 525,
Oakland, CA 94607
(707) 576-0829

SIGNED: OCTOBER 30, 2020

COSTA ENGINEERS INC.
3274 Villa Lane Napa, Ca 94558 ph. 707-252-9177 fax. 707-252-9473

REGISTERED PROFESSIONAL ENGINEER
CHRISTOPHER J. DEL CORE
Nov. 30,000
Exp. 12-31-20
MECHANICAL
STATE OF CALIFORNIA

FREEDOM HIGH SCHOOL

NEW AUXILIARY GYMNASIUM

1050 NEROLY RD,
OAKLEY, CA 94561

LIBERTY UNION HIGH SCHOOL DISTRICT

DSA APP NO. 01-119278

ARCH PROJECT NO: 1869.00
DRAWN BY: MQ
DRAWING SCALE:
PTN: 61721-78 FILE NO: 7-H4

BID DOCUMENT

APRIL 27, 2021

SHEET TITLE

MECHANICAL DETAILS

SHEET NUMBER

M-M7.4

4/27/2021 11:53:14 AM C:\Users\robert\Documents\20053 Freedom HS Auxiliary Gym RVT18_rengland@costaengineers.com.rvt

THE WIRELESS GATEWAY IS DESIGNATED TO BE WALL MOUNTED USING THE INCLUDED 3M COMMAND REMOVABLE STRIPS.

FIND A SUITABLE LOCATION WHICH IS:

-WITHIN 10 FEET OF YOUR INTERNET ROUTER
-WITHIN 4 FEET OF AN ELECTRICAL OUTLET
-AT LEAST 4 FEET AWAY FROM OTHER WIRELESS DEVICES
-AWAY FROM LARGE METAL OBJECTS WHICH MAY INTERFERE WITH THE WIRELESS SIGNAL.
-ABOVE OFFICE EQUIPMENT WHICH MAY INTERFERE WITH THE WIRELESS SIGNAL
-ACTUAL QUANTITY AND LOCATIONS TO BE DETERMINED BY INSTALLER. NO PRACTICAL LIMITS TO NUMBER OF THERMOSTATS SUPPORTED BY A SINGLE GATEWAY

FACTORY IP ADDRESS GATE WAY WILL CONNECT AUTOMATICALLY TO PELICAN SERVER AFTER SERIAL NO. OF GATEWAY IS REGISTERED ON PELICAN SITE.

GO TO http://www.pelicanwireless.com/new-site-subscription/

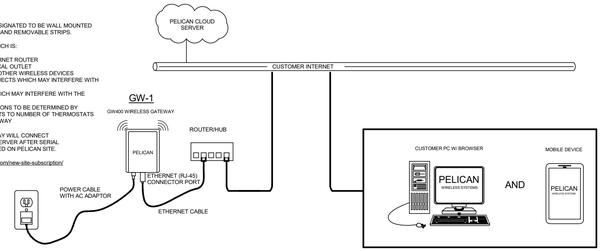

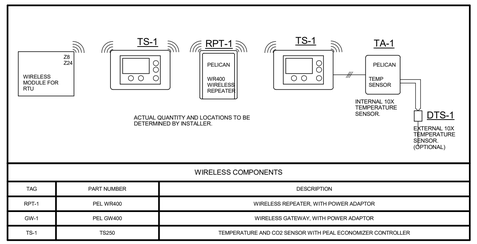

WIRELESS COMPONENTS

TAG	PART NUMBER	DESCRIPTION
RPT-1	PEL WR400	WIRELESS REPEATER, WITH POWER ADAPTOR
GW-1	PEL GW400	WIRELESS GATEWAY, WITH POWER ADAPTOR
TS-1	TS250	TEMPERATURE AND CO2 SENSOR WITH PEAL ECONOMIZER CONTROLLER

A EXISTING CAMPUS PELICAN WIRELESS LAN LAYOUT

SCALE: NONE

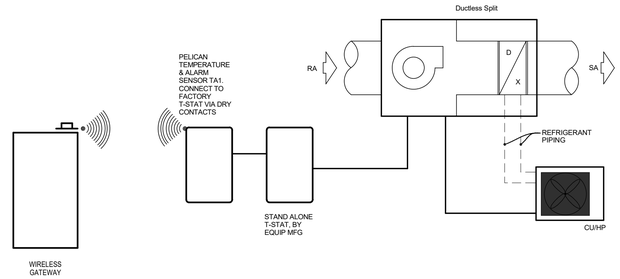

B SINGLE ZONE DUCTLESS SPLIT SYSTEM WIRELESS CONTROL DIAGRAM

SCALE: NONE

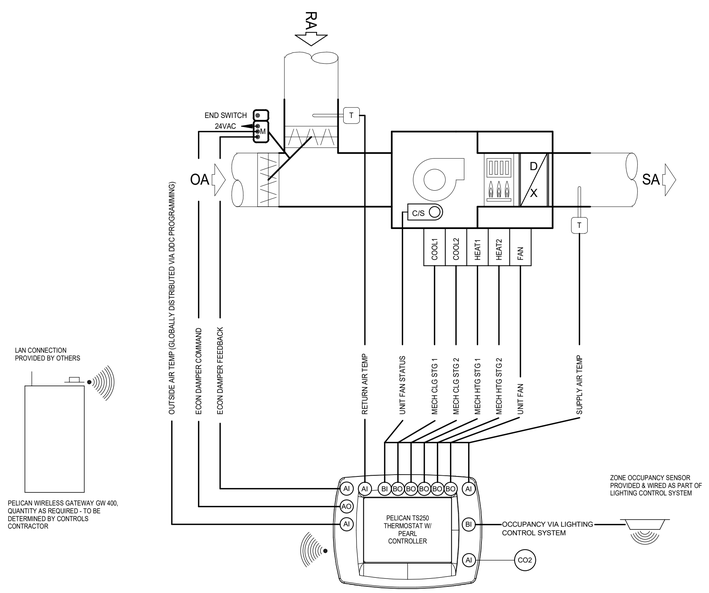

PACKAGED AC UNIT WITH ECONOMIZER, POWER EXHAUST, DEMAND CONTROL VENTILATION, ZONE OCCUPANCY MONITORING

1. SYSTEM OVERVIEW
a. EACH AC UNIT WILL BE DIRECTLY CONTROLLED BY ITS OWN DEDICATED EMS (ENERGY MANAGEMENT SYSTEM) UNITARY CONTROLLER.
b. EMS UNITARY CONTROLLER WILL BE CONNECTED TO A WALL MOUNTED ELECTRONIC ZONE TEMPERATURE SENSOR WITH INTEGRAL RELATIVE HUMIDITY SENSOR AND CO2 SENSOR.
c. ELECTRONIC ZONE TEMPERATURE SENSOR SHALL HAVE A TOUCH SCREEN LCD INTERFACE WHICH INCLUDES: 1) DIGITAL PUSHBUTTONS FOR WARMER/COOLER SETPOINT CONTROL; 2) VISUAL DISPLAY OF ROOM TEMPERATURE, ROOM HUMIDITY, ROOM CO2 AND AMBIENT OSA TEMPERATURE; AND 3) DIGITAL PUSHBUTTON AFTER-HOURS OVERRIDE TIMER CONTROL, WITH USER ADJUSTABLE DURATION. THE AFTER-HOURS OVERRIDE DURATION SHALL HAVE THE ABILITY TO BE LIMITED FROM THE FRONT-END.
2. OCCUPANCY/VACANCY MONITORING
a. ZONE OCCUPANCY AND VACANCY WILL BE ACTIVELY MONITORED BY CONNECTION TO LIGHTING CONTROL SYSTEM OCCUPANCY SENSOR(S). IF AVAILABLE, MONITORING SHALL BE ACCOMPLISHED VIA BACNET SYSTEM INTEGRATION. OTHERWISE, BAS CONTRACTOR SHALL MONITOR AUXILIARY CONTACTS ON LIGHTING CONTROL SYSTEM OCCUPANCY SENSOR(S).
3. UNIT FAN OPERATION
a. WHEN THE ZONE IS IN OCCUPIED MODE OR IN AFTERHOURS MODE, THE FAN SHALL RUN CONTINUOUSLY, UNLESS VACANT MODE HAS BEEN TRIGGERED.
b. LOW SPEED AND HIGH SPEED FAN OPERATION TO BE CONTROLLED BY AC UNIT MANUFACTURER'S INTERNAL CONTROLS INDEPENDENT OF EMS BASED UPON CALL FOR HEATING, COOLING OR VENTILATION.
c. DURING THE UNOCCUPIED MODE AS DETERMINED BY EMS TIME SCHEDULE, THE UNIT FAN CYCLES WITH DEMAND AND THE TEMPERATURE IS CONTROLLED BY THE UNOCCUPIED SPACE TEMPERATURE HEATING AND COOLING SETPOINTS.
4. MINIMUM OUTDOOR AIR VENTILATION
a. DURING OCCUPIED MODE OR AFTERHOURS MODE, THE ECONOMIZER DAMPER SHALL BE COMMANDED BY THE EMS UNITARY CONTROLLER TO MAINTAIN A POSITION WHICH SATISFIES THE MINIMUM OUTDOOR AIR VENTILATION REQUIREMENTS FOR THE ZONE. DAMPER POSITION(S) DETERMINED BY AIR BALANCING CONTRACTOR.
5. DEMAND CONTROL VENTILATION
a. EMS UNITARY CONTROLLER WILL BE CONNECTED TO A WALL MOUNTED CO2 SENSOR TO MONITOR ZONE CO2 CONCENTRATION.
b. DURING OCCUPIED MODE OR AFTERHOURS MODE, THE EMS UNITARY CONTROLLER SHALL RESET THE OUTSIDE AIR DAMPER MINIMUM POSITION TO MAINTAIN THE CO2 CONCENTRATION BELOW 1,000 PPM.
6. AUTOMATIC DEMAND REDUCTION CONTROLS
a. EMS SHALL BE PROGRAMMED WITH CAPABILITY TO IMPLEMENT CENTRALIZED DEMAND SHED FOR ALL NON-CRITICAL ZONES UPON CALL FOR AUTOMATIC DEMAND REDUCTION. CRITICAL ZONES SHALL NOT BE IMPACTED BY DEMAND SHED CONSERVATION MEASURES.
7. VACANT MODE CONTROL
a. WHEN THE ZONE HAS BEEN SCHEDULED FOR OCCUPANCY FOR AT LEAST ONE HOUR AND THE OCCUPANCY SENSOR HAS CONFIRMED THAT ZONE HAS BEEN VACANT FOR 5 MINUTES (ADJUSTABLE: MAXIMUM 30 MINUTES), ZONE SHALL BE PLACED INTO VACANT MODE.
b. RESET COOLING AND HEATING SETPOINTS UP AND DOWN BY 2°F (ADJUSTABLE) OR MORE.
c. MINIMUM OUTDOOR AIR VENTILATION REQUIREMENTS IN THE ZONE NEED ONLY BE MAINTAINED 15 MINUTES OUT OF EVERY 60 MINUTES WHILE THE ZONE IS IN VACANT MODE.
d. UPON DETECTION OF OCCUPANCY, VACANT MODE SHALL BE CLEARED.
8. ZONE PRE-OCCUPANCY PURGE
a. THE EMS SHALL SCHEDULE THE ZONE TO BE IN OCCUPIED MODE ONE HOUR PRIOR TO THE ACTUAL TIME OF ANTICIPATED OCCUPANCY.
9. HEATING OPERATION
a. THE CONTROLLER COMPARES THE HEATING SETPOINT WITH THE SPACE TEMPERATURE AND DETERMINES A NEED-HEATING CONTROL SIGNAL TO STAGE A GAS REGULATING VALVE ON THE UNIT.
b. ECONOMIZER TO BE COMMANDED TO MIN CFM SETPOINT AND MECHANICAL COOLING TO BE LOCKED OUT DURING HEATING MODE.
10. COOLING OPERATION
a. THE CONTROLLER COMPARES THE COOLING SETPOINT WITH THE SPACE TEMPERATURE AND DETERMINES A NEED-COOLING SIGNAL.
b. THE FIRST STAGE OF COOLING WILL ENABLE THE ECONOMIZER TO PROVIDE FREE COOLING FOR AS LONG AS POSSIBLE.
c. THE SECOND STAGE WILL ENABLE THE COMPRESSOR(S) TO MAINTAIN THE ROOM SET POINT.
d. MECHANICAL HEATING TO BE LOCKED OUT DURING COOLING MODE.
11. FAULT DETECTION DIAGNOSTICS
a. THE EMS DDC CONTROLLER SHALL MONITOR THE FOLLOWING ECONOMIZER ACTUATOR FAULT DETECTION DIAGNOSTIC CONDITIONS AND BROADCAST RESULTS VIA EMS NETWORK:
i. TEMPERATURE SENSOR FAILURE/FAULT
ii. ECONOMIZER NOT ECONOMIZING WHEN ENABLED
iii. ECONOMIZER ECONOMIZING WHEN DISABLED
iv. ECONOMIZER DAMPER MODULATION FAILURE
v. EXCESS OUTDOOR AIR
12. MONITORING - THE FOLLOWING CONDITIONS SHALL BE MONITORED AND DISPLAYED AT EMS OPERATOR WORKSTATION/GRAPHICAL USER INTERFACE:
a. SUPPLY AIR TEMPERATURE.
b. ROOM TEMPERATURE.
c. ROOM CO2 CONCENTRATION.
d. ROOM OCCUPANCY STATUS.
e. CURRENT MODE (HEATING/COOLING/FAN).
f. SUPPLY AIR TEMPERATURE ATTAINED LAST TIME UNIT WAS IN HEATING.
g. SUPPLY AIR TEMPERATURE ATTAINED LAST TIME UNIT WAS IN COOLING.
h. CURRENT COMMAND STATUS OF FAN, ECONOMIZER, COMPRESSOR AND GAS VALVE.
i. RUN TIME METERS ON FAN, COMPRESSOR, AND HEAT.
j. FAN STATUS THRU CURRENT SWITCH.
k. ECONOMIZER ACTUATOR FEEDBACK STATUS.

C PACKAGE AC UNIT W/ DEMAND CONTROL VENTILATION & OCCUPANCY MONITORING

SCALE: NONE

QUATTROCCHI KWOK ARCHITECTS
Main Office:
636 Fifth Street, Santa Rosa, CA 95404
East Bay:
55 Harrison Street, Suite 525,
Oakland, CA 94607
(707) 576-0829

SIGNED: OCTOBER 30, 2020

COSTA ENGINEERS INC.
3274 Villa Lane Napa, CA 94558 ph. 707-252-9177 fax: 707-252-9473

REGISTERED PROFESSIONAL ENGINEER
CHRISTOPHER J. DEL CORE
No. 33000
Exp. 12-31-20
MECHANICAL
STATE OF CALIFORNIA

FREEDOM HIGH SCHOOL

NEW AUXILIARY GYMNASIUM

1050 NEROLY RD,
OAKLEY, CA 94561

LIBERTY UNION HIGH SCHOOL DISTRICT

DSA APP NO. 01-119278

ARCH PROJECT NO:	1869.00
DRAWN BY:	MQ
DRAWING SCALE:	
PTN: 61721-78	FILE NO: 7-H4

BID DOCUMENT

APRIL 27, 2021

SHEET TITLE

CONTROL DIAGRAMS

SHEET NUMBER

M-M8.1

4/27/2021 11:53:15 AM C:\Users\robert\Documents\20053 Freedom HS Auxiliary Gym RVT18_rengland@costaengineers.com.rvt

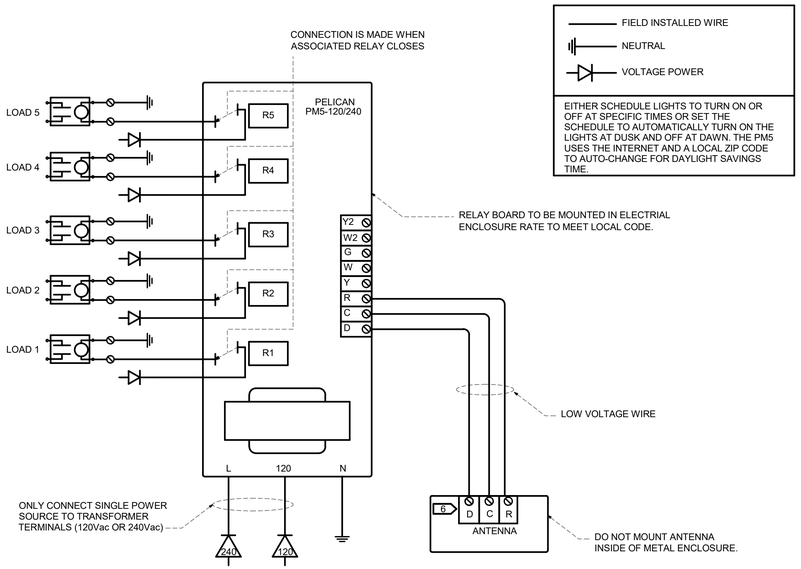

FIELD INSTALLED WIRE

NEUTRAL

VOLTAGE POWER

EITHER SCHEDULE LIGHTS TO TURN ON OR OFF AT SPECIFIC TIMES OR SET THE SCHEDULE TO AUTOMATICALLY TURN ON THE LIGHTS AT DUSK AND OFF AT DAWN. THE PM5 USES THE INTERNET AND A LOCAL ZIP CODE TO AUTO-CHANGE FOR DAYLIGHT SAVINGS TIME.

A OUTDOOR LIGHTING CONTROL DIAGRAM

SCALE: NONE

QUATTROCCHI KWOK ARCHITECTS

Main Office:
636 Fifth Street, Santa Rosa, CA 95404
East Bay:
55 Harrison Street, Suite 525,
Oakland, CA 94607
(707) 576-0829

SIGNED: OCTOBER 30, 2020

COSTA ENGINEERS INC.
3274 Villa Lane Napa, Ca 94558 ph. 707-252-9177 fax: 707-252-9473

REGISTERED PROFESSIONAL ENGINEER
CHRISTOPHER J. DEL CORE
No. 33000
Exp. 12-31-20
MECHANICAL
STATE OF CALIFORNIA

FREEDOM HIGH SCHOOL

NEW AUXILIARY GYMNASIUM

1050 NEROLY RD,
OAKLEY, CA 94561

LIBERTY UNION HIGH SCHOOL DISTRICT

DSA APP NO. 01-119278

ARCH PROJECT NO: 1869.00

DRAWN BY: MQ

DRAWING SCALE:

PTN: 61721-78 FILE NO: 7-H4

BID DOCUMENT

APRIL 27, 2021

SHEET TITLE

CONTROL DIAGRAMS

SHEET NUMBER

M-M8.2

4/27/2021 11:53:15 AM C:\Users\robert\Documents\20053 Freedom HS Auxiliary Gym RVT18_renglund@costaengineers.com.rvt

Applicable Code: 2019 CBC 02/05/2020 Revised: 02/14/2020

MEP Componet Anchorage Note

All mechanical, plumbing, and electrical components shall be anchored and installed per the details on the DSA-approved construction documents. The following components shall be anchored or braced to meet the force and displacement requirements prescribed in the 2019 CBC Sections 1617A.1.18 through 1617A.1.26 and ASCE 7-16 Chapters 13, 26, and 30:

1. All permanent equipment and components.
2. Temporary, movable or mobile equipment that is permanently attached (e.g. hard wired) to the building utility services such as electricity, gas or water. "Permanently attached" shall include all electrical connections except plugs for 110/220 volt receptacles having a flexible cable.
3. Temporary, movable or mobile which is heavier than 400 pounds or has a center of mass located 4 feet or more above the adjacent floor or roof level that directly support the component is required to be restrained in a manner approved by DSA.

The following mechanical and electrical components shall be positively attached to the structure but need not demonstrate design compliance with the references noted above. These components shall have flexible connections provided between the component and associated ductwork, piping, and conduit. Flexible connections must allow movement in both trasverse and longitudinal directions:

A. Components weighing less than 400 pounds and having a center of mass located 4 feet or less above the adjacent floor or roof level that directly support the component.

B. Components weighing less than 20 pounds, or in the case of distributed systems, less than 5 pounds per foot, which are suspended from a roof or floor or hung from a wall.

The anchorage of all mechanical, electrical and plumbing components shall be subject to the approval of the design professional in general responsible charge of structural engineer delegated responsibility and acceptance by DSA. The project inspector will verify that all components and equipment have been anchored in accordance with the above requirements.

Piping, Ductwork, and Electrical Distribution System Bracing Note

Piping, ductwork, and electrical distribution systems shall be braced to comply with the forces and displacements prescribed in ASCE 7-16 Section 13.3 as defined in ASCE 7-16 Sections 13.6.5, 13.6.6, 13.6.7, 13.6.8; and 2019 CBC, Sections 1617A.1.24, 1617A.1.25 and 1617A.1.26.

The method of showing bracing and attachments to the structure for the identified distribution system are as noted below. When bracing and attachments are based on a preapproved installation guide (e.g., OSHPD OPM for 2013 CBC or later), copies of the bracing system installation guide or manual shall be available on the jobsite prior to the start of and during the haging and bracing of the distribution systems. The Structural Engineer of Record shall verify the adequacy of the structure to support the hanger and brace loads.

Mechanical Piping (MP), Mechanical Ducts (MD), Plumbing Piping (PP), Electrical Distribution Systems (E):

MP☐ MD☐ PP☐ E☐ Option 1: Detailed on the approved drawings with project specific notes and details

MP☐ MD☐ PP☒ E☐ Option 2: Shall comply with the applicable OSHPD Pre-Approval (OPM #) #OPM-0043-13

APPLICABLE GOVERNING CODES:

2019 CALIFORNIA BUILDING CODE
2019 CALIFORNIA ELECTRICAL CODE
2019 CALIFORNIA MECHANICAL CODE
2019 CALIFORNIA PLUMBING CODE
2019 CALIFORNIA ENERGY CODE
2019 CALIFORNIA FIRE CODE
2019 CALIFORNIA GREEN BUILDING STANDARDS

PLUMBING FIXTURE SCHEDULE

MARK	W	V	CW	HW	FLOW RATE	FLUSH VOLUME	REMARKS
P-1	4"	2"	1 1/2"		-	1.28 GPF	WALL MOUNTED WATER CLOSET (ADA)
P-2	2"	1 1/2"	3/4"	3/4"	0.5 GPM	-	WALL MOUNTED LAVATORY (SAD FOR MOUNTING HEIGHT)
P-4	2"	1 1/2"	3/4"	3/4"	2.5 GPM	-	FLOOR MOUNTED JANITOR SINK
P-6	2"	1 1/2"	3/4"	0"	0.14 GPM	-	HIGH LOW DRINKING FOUNTAIN WITH BOTTLE FILLER
RD					-	-	ROOF DRAIN SEE PLAN FOR PIPE SIZES
FD-1	3"	1 1/2"			-	-	FLOOR DRAIN WITH TRAP PRIMMER
HB-1			3/4"		5.5 GPM	-	EXTERIOR HOSE BIBB

1. CW FIXTURES AND VALVES SHALL BE AB1953 COMPLIANT.
2. FOR FIXTURE LOCATION SAD

ELECTRIC WATER HEATER SCHEDULE

MARK	MANUF.	MODEL	TYPE	STORAGE CAPACITY	RECOVER Y @ 60F° RISE	ELECTRICAL V-Ø-HZ	ELECTRICAL No. Elements	ELECTRICAL WATTS	OPER. WEIGHT	LOCATION	REMARKS
EWH 1	A.O. SMITH	DEL 20	TANK	20 gal	20	208-1-60	1	3,000 W	240 lb	JANITORIAL	1-5

REMARKS:
1. PROVIDE FACTORY INSTALLED AUTOMATIC TEMPERATURE CONTROL WITH SAFETY CUTOFF TO PREVENT OVERHEATING.
2. PROVIDE WITH ST-12 EXPANSION TANK.
3. PROVIDE WITH HOLDRITE QUICK STAND #30-SWHP-WM WALL MOUNTED MANUFACTURER ENGINEERED EQUIPMENT PLATFORM ASSEMBLY.
4. PROVIDE WITH HOLDRITE QUICK STRAP #QS-U ASSEMBLY
5. PROVIDE WITH WATTS E-50 SEISMIC RESTRAINT T&B SYSTEM

PLUMBING LEGEND

SYMBOL	ABBREVIATION	DESCRIPTION
X		EQUIPMENT TYPE
X		EQUIPMENT NUMBER
X		DETAIL / DRAWING NUMBER
X-X		SHEET NUMBER
X-XX		FIXTURE TYPE/NUMBER
	SS	SANITARY WASTE BELOW GROUND
	V	VENT PIPE
	DCW	COLD WATER PIPE
	DHW	HOT WATER PIPE
	HWR	HOT WATER RETURN PIPE
CD	CD	CONDENSATE DRAIN
G	G	NATURAL GAS PIPE
RVD	RVD	RELIEF VALVE DISCHARGE
RWL	RWL	RAIN WATER LEADER
OD	OD	OVERFLOW DRAIN PIPE
	GV	GATE VALVE
		GLOBE VALVE
	BV	BALL VALVE
	BFV	BUTTERFLY VALVE
	CV	CHECK VALVE
		BALANCING VALVE
		GAS COCK OR STOP
	PRV	PRESSURE REDUCING VALVE
	TV	TEMPERING VALVE
		STRAINER
		UNION
		PRESSURE GAUGE AND COCK
	P	PUMP
		THERMOMETER
	CO	CLEANOUT
	WCO	WALL CLEANOUT
	FCO	FLOOR CLEANOUT
	COTG	CLEANOUT TO GRADE
		PRESSURE GUAGE WELL ONLY (PETE'S PLUG)
	HB	HOSE BIBB
		PIPE UP
		PIPE DOWN
		BRANCH TOP CONNECTION
		BRANCH BOTTOM CONNECTION
		BRANCH SIDE CONNECTION
		CAP ON END OF PIPE
		CONCENTRIC REDUCER
		ECCENTRIC REDUCER
		VALVE IN RISER
		POINT OF CONNECTION
		POINT OF DEMOLITION
℄		CENTER LINE
	AFF	ABOVE FINISHED FLOOR
	AFG	ABOVE FINISHED GRADE
	AP	ACCESS PANEL
	BFF	BELOW FINISHED FLOOR
	CI	CAST IRON
	COTG	CLEANOUT TO GRADE
	DMV	DRAIN, WASTE, AND VENT
	DN	DOWN
	DW	DISHWASHER
	DWG	DRAWING
	(E)	EXISTING
	FCO	FLOOR CLEANOUT
	IE	INVERT ELEVATION
	IW	IN WALL
	MFR	MANUFACTURER
	(N)	NEW
	NIC	NOT IN CONTRACT
	NTS	NOT TO SCALE
	SA	SHOCK ABSORBER
	SAD	SEE ARCHITECTURAL DRAWINGS
	SCD	SEE CIVIL DRAWINGS
	SED	SEE ELECTRICAL DRAWINGS
	SMD	SEE MECHANICAL DRAWINGS
	SSD	SEE STRUCTURAL DRAWINGS
	TYP	TYPICAL
	UMC	UNIFORM MECHANICAL CODE
	UPC	UNIFORM PLUMBING CODE
	UNO	UNLESS NOTED OTHERWISE
	V	VENT
	VTR	VENT THROUGH ROOF
	WCO	WALL CLEANOUT
	WA	WATER HAMMER ARRESTOR

BLDG 'PLUMBING' SHEET LIST

P-M1.1	PLUMBING SCHEDULES & LEGENDS
P-M2.0	GAS SITE PLAN
P-M2.1	PLUMBING WASTE & VENT FLOOR PLAN
P-M2.2	PLUMBING WATER & GAS
P-M3.1	PLUMBING ROOF PLAN
P-M7.1	PLUMBING DETAILS
P-M7.2	PLUMBING DETAILS

QUATTROCCHI KWOK ARCHITECTS
Main Office:
636 Fifth Street, Santa Rosa, CA 95404
East Bay:
55 Harrison Street, Suite 525,
Oakland, CA 94607
(707) 576-0829

SIGNED: OCTOBER 30, 2020

COSTA ENGINEERS INC.
3274 Villa Lane Napa, Ca 94558 ph. 707-252-9177 fax 707-252-9473

REGISTERED PROFESSIONAL ENGINEER
CHRISTOPHER J. DEL CORE
No. 33000
Exp. 12-31-20
MECHANICAL
STATE OF CALIFORNIA

FREEDOM HIGH SCHOOL

NEW AUXILIARY GYMNASIUM

1050 NEROLY RD,
OAKLEY, CA 94561

LIBERTY UNION HIGH SCHOOL DISTRICT

DSA APP NO. 01-119278

ARCH PROJECT NO: 1869.00
DRAWN BY: MQ
DRAWING SCALE:
PTN: 61721-78 FILE NO: 7-H4

BID DOCUMENT

APRIL 27, 2021

SHEET TITLE

PLUMBING SCHEDULES & LEGENDS

SHEET NUMBER

P-M1.1

4/27/2021 11:53:15 AM C:\Users\robert\Documents\20053 Freedom HS Auxiliary Gym RVT18_renglandd@costaengineers.com.rvt

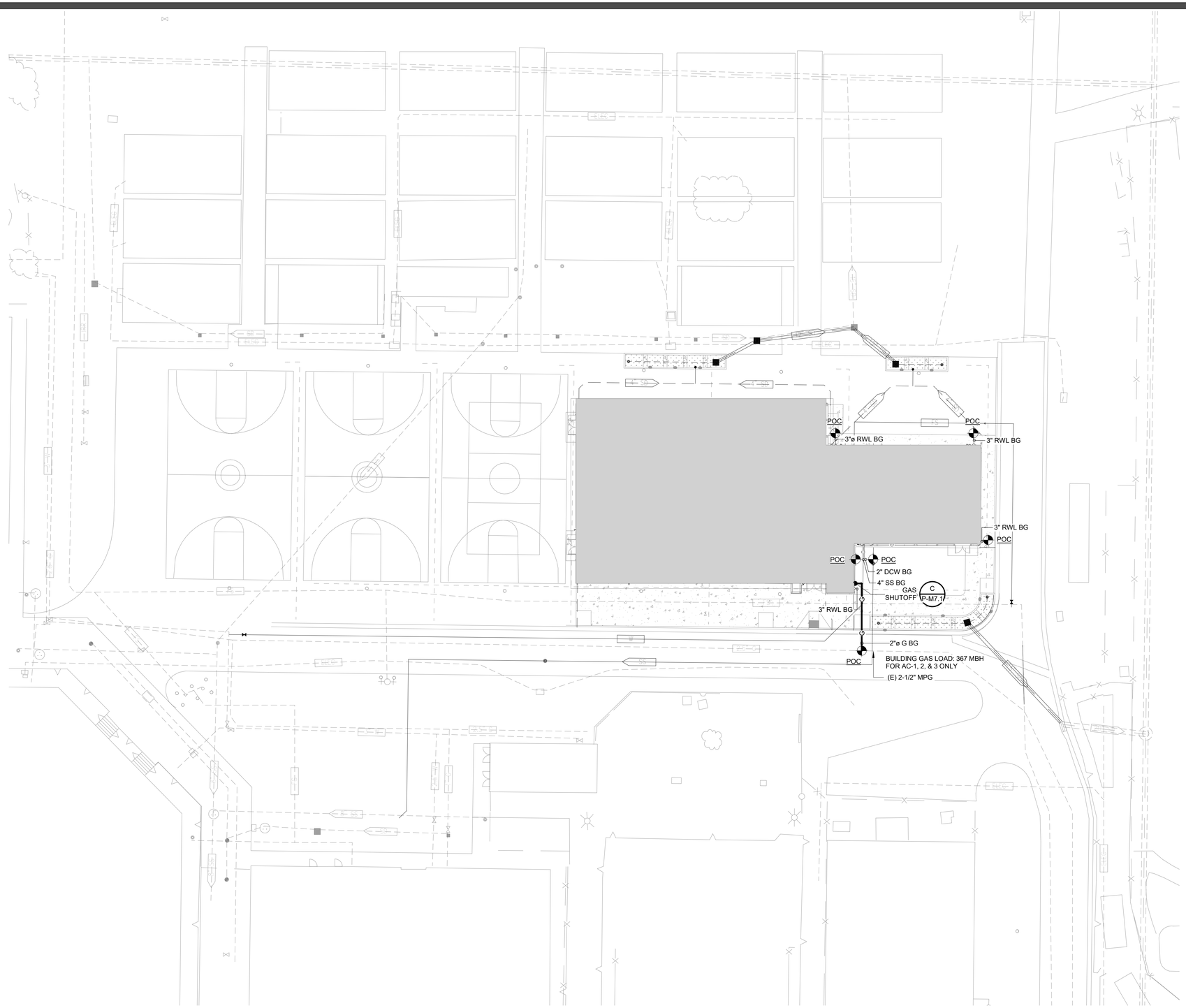

1 UTILITIES SITE PLAN

1" = 20'-0"

GENERAL NOTES

A. FOR PLUMBING GENERAL NOTES, LEGENDS, AND SYMBOLS, REFER TO SHEET P-M1.1

B. PLUMBING CONTRACTOR SHALL BE RESPONSIBLE FOR COORDINATING THE PLUMBING WORK WITH OTHER TRADES. MAKE ANY OFFSETS AS REQUIRED TO AVOID CONFLICT WITH, LIGHT FIXTURES, SKYLIGHTS, HVAC ETC.

C. CONTRACTOR SHALL COORDINATE ALL SHUT OFF VALVE LOCATIONS. SEE ARCHITECTURAL CEILING PLANS AND WALL PLANS.

D. WHERE BRACING DETAILS ARE NOT SHOWN ON THE DRAWING OR IN THE GUIDELINES, THE FIELD INSTALLATION SHALL BE SUBJECT TO THE APPROVAL OF THE ARCHITECT, MECHANICAL ENGINEER AND FIELD INSPECTOR OF THE GOVERNING AUTHORITY.

E. REFER TO ARCHITECTURAL GRAPHICS DRAWINGS FOR SIGNAGE NOT SHOW.

F. SEE ARCHITECTURAL DRAWINGS FOR EXACT LOCATION OF PLUMBING FIXTURES.

G. PROVIDE WALL CLEANOUTS FOR SINKS AND URINALS AS REQUIRED.

H. FOR ACCESSIBLE WATER CLOSETS, LOCATE VALVE HANDLE ON THE ACCESSIBLE SIDE PER ACCESSIBLE REQUIREMENTS.

J. ALL UNDERGROUND AND BELOW SLAB PIPING SHALL BE INSTALLED NO LESS THAN MINIMUM BURY PER CODE. ALL PIPING THROUGH SLAB, BURIED OR UNDERNEATH FOUNDATION SSD

WALL LEGENDS

NOTES:
S.S.D. FOR WOOD FRAMING SIZES FOR ALL BEARING WALLS. ALL OTHER WALLS ARE 2X6 WOOD STUDS U.O.N.

WOOD FRAMING - NON RATED

KEYPLAN

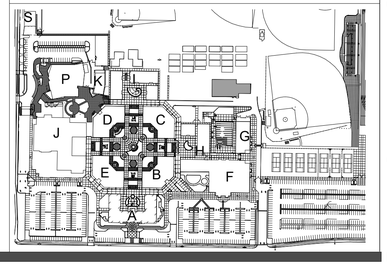

QUATTROCCHI KWOK ARCHITECTS
Main Office:
636 Fifth Street, Santa Rosa, CA 95404
East Bay:
55 Harrison Street, Suite 525,
Oakland, CA 94607
(707) 576-0829

SIGNED: OCTOBER 30, 2020

COSTA ENGINEERS INC.
3274 Villa Lane Napa, Ca 94558 ph. 707-252-9177 fax. 707-252-9473

REGISTERED PROFESSIONAL ENGINEER
CHRISTOPHER J. DEL CORE
No. 33000
Exp. 12-31-20
MECHANICAL
STATE OF CALIFORNIA

FREEDOM HIGH SCHOOL

NEW AUXILIARY GYMNASIUM

1050 NEROLY RD,
OAKLEY, CA 94561

LIBERTY UNION HIGH SCHOOL DISTRICT

DSA APP NO. 01-119278

ARCH PROJECT NO:	1869.00
DRAWN BY:	MQ
DRAWING SCALE:	1" = 20'-0"
PTN: 61721-78	FILE NO: 7-H4

BID DOCUMENT

APRIL 27, 2021

SHEET TITLE

GAS SITE PLAN

SHEET NUMBER

P-M2.0

4/27/2021 11:53:16 AM C:\Users\robert\Documents\20053 Freedom HS Auxiliary Gym RVT18_renglund@costaengineers.com.rvt

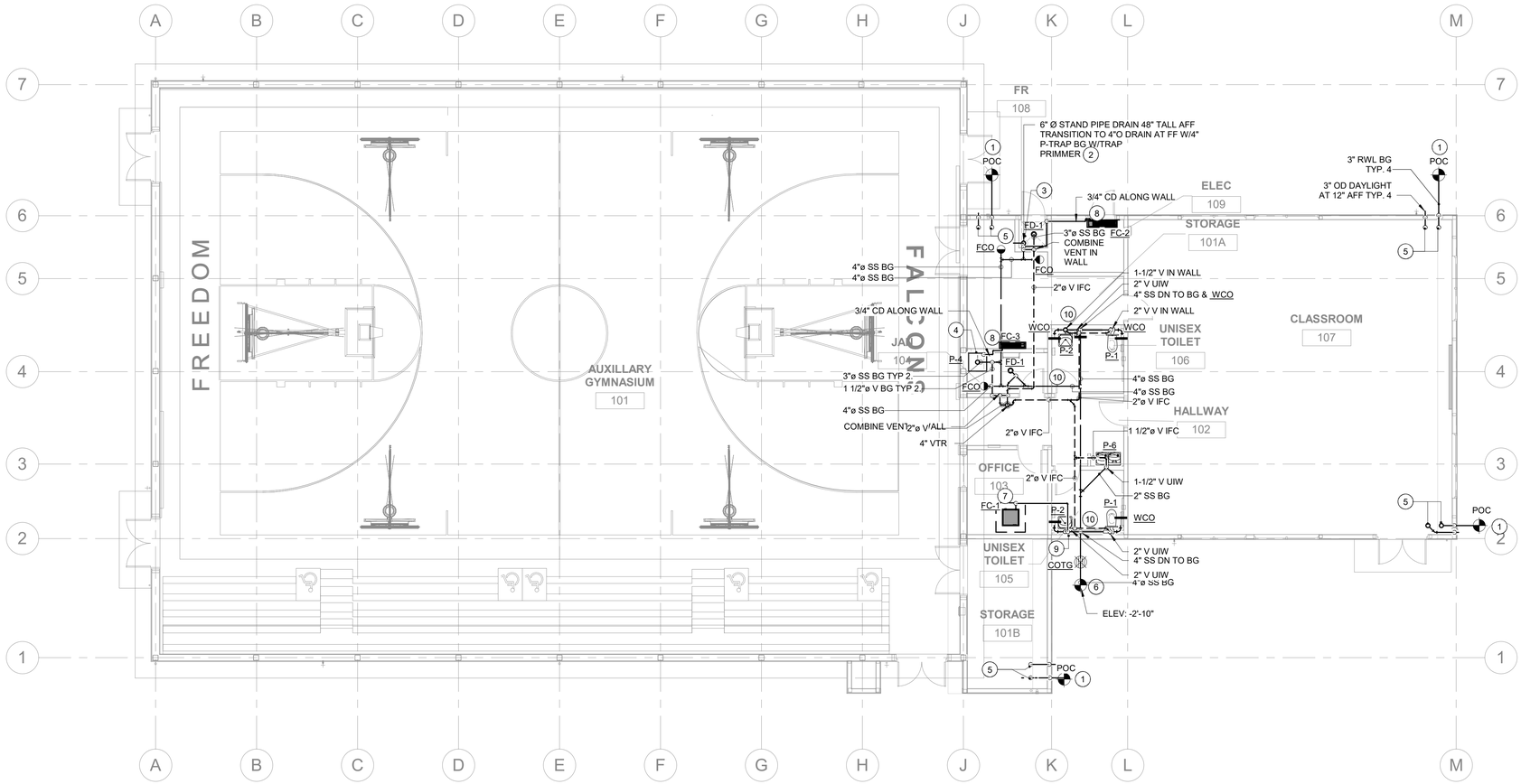

1 AUXILIARY GYM - PLUMBING WASTE & VENT FLOOR PLAN

1/8" = 1'-0"

NORTH

0 4' 8' 16'

GENERAL NOTES

A. FOR PLUMBING GENERAL NOTES, LEGENDS, AND SYMBOLS, REFER TO SHEET P-M1.1

B. PLUMBING CONTRACTOR SHALL BE RESPONSIBLE FOR COORDINATING THE PLUMBING WORK WITH OTHER TRADES. MAKE ANY OFFSETS AS REQUIRED TO AVOID CONFLICT WITH, LIGHT FIXTURES, SKYLIGHTS, HVAC ETC.

C. CONTRACTOR SHALL COORDINATE ALL SHUT OFF VALVE LOCATIONS. SEE ARCHITECTURAL CEILING PLANS AND WALL PLANS.

D. WHERE BRACING DETAILS ARE NOT SHOWN ON THE DRAWING OR IN THE GUIDELINES, THE FIELD INSTALLATION SHALL BE SUBJECT TO THE APPROVAL OF THE ARCHITECT, MECHANICAL ENGINEER AND FIELD INSPECTOR OF THE GOVERNING AUTHORITY.

E. REFER TO ARCHITECTURAL GRAPHICS DRAWINGS FOR SIGNAGE NOT SHOW.

F. SEE ARCHITECTURAL DRAWINGS FOR EXACT LOCATION OF PLUMBING FIXTURES.

G. PROVIDE WALL CLEANOUTS FOR SINKS AND URINALS AS REQUIRED.

H. FOR ACCESSIBLE WATER CLOSETS, LOCATE VALVE HANDLE ON THE ACCESSIBLE SIDE PER ACCESSIBLE REQUIREMENTS.

J. ALL UNDERGROUND AND BELOW SLAB PIPING SHALL BE INSTALLED NO LESS THAN MINIMUM BURY PER CODE. ALL PIPING THROUGH SLAB, BURIED OR UNDERNEATH FOUNDATION SSD

SHEET NOTES

1. POC RAIN WATER LEADER (RWL) TO POC 5'-0" OUTSIDE OF BUILDING. REFER TO SITE CIVIL DRAWINGS FOR CONTINUATION.
2. FIRE STAND DRAIN SEE DETAIL. (K / P-M7.1)
3. 3/4" CD DIW TO FIRE STAND DRAIN
4. 3/4" CD DIW TO JANITORIAL SINK
5. 3" RWL & 3" OD UP THRU ROOF TO ROOF DRAIN
6. 4" SANITARY SEWER (SS) TO POC AT 5'-0" OUTSIDE OF BUILDING WITH COTG. REFER TO SITE CIVIL DRAWINGS FOR CONTINUATION.
7. CEILING CASSETTE CONDENSATE CONNECTION PER DETAIL (E / P-M7.1)
8. WALL MOUNTED FAN COIL CONDENSATE.. SIMILAR CONNECTION PER DETAIL (D / P-M7.1) PIPE ALONG WALL AND THRU WALL.
9. 3/4" CD DIW TO SINK TAIL PIECE PER DETAIL (B / P-M7.2)
10. PIPE THRU FOOTING

WALL LEGENDS

NOTES:
S.S.D. FOR WOOD FRAMING SIZES FOR ALL BEARING WALLS. ALL OTHER WALLS ARE 2X6 WOOD STUDS U.O.N.

WOOD FRAMING - NON RATED

KEYPLAN

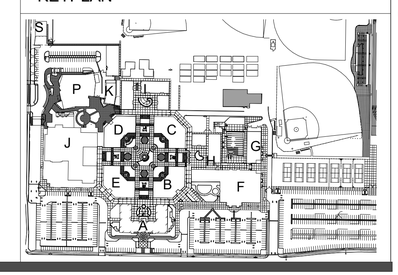

QUATTROCCHI KWOK ARCHITECTS
Main Office:
636 Fifth Street, Santa Rosa, CA 95404
East Bay:
55 Harrison Street, Suite 525,
Oakland, CA 94607
(707) 576-0829

SIGNED: OCTOBER 30, 2020

COSTA ENGINEERS INC.
3274 Villa Lane Napa, Ca 94558 ph. 707-252-9177 fax. 707-252-8473

REGISTERED PROFESSIONAL ENGINEER
CHRISTOPHER J. DEL CORE
No. 33000
Exp. 12-31-20
MECHANICAL
STATE OF CALIFORNIA

FREEDOM HIGH SCHOOL

NEW AUXILIARY GYMNASIUM

1050 NEROLY RD,
OAKLEY, CA 94561

LIBERTY UNION HIGH SCHOOL DISTRICT

DSA APP NO. 01-119278

ARCH PROJECT NO:	1869.00
DRAWN BY:	LM/MQ
DRAWING SCALE:	1/8" = 1'-0"
PTN: 61721-78	FILE NO: 7-H4

BID DOCUMENT

APRIL 27, 2021

SHEET TITLE

PLUMBING WASTE & VENT FLOOR PLAN

SHEET NUMBER

P-M2.1

4/27/2021 11:53:18 AM C:\Users\robert\Documents\20053 Freedom HS Auxiliary Gym RVT18_renglund@costaengineers.com.rvt

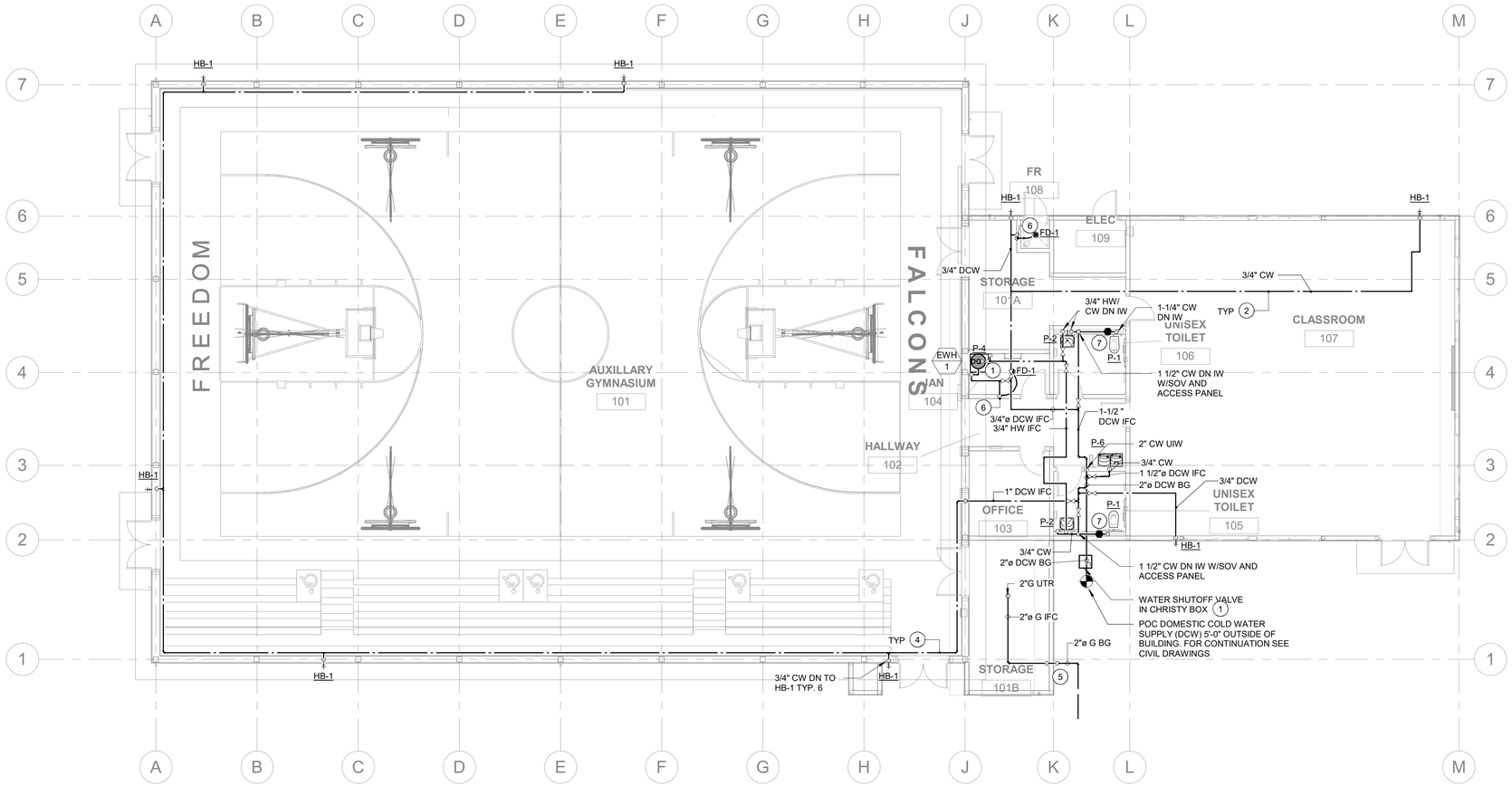

1 AUXILIARY GYM - PLUMBING WATER & GAS FLOOR PLAN

1/8" = 1'-0"

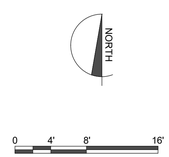

GENERAL NOTES

A. FOR PLUMBING GENERAL NOTES, LEGENDS, AND SYMBOLS, REFER TO SHEET P-M1.1

B. PLUMBING CONTRACTOR SHALL BE RESPONSIBLE FOR COORDINATING THE PLUMBING WORK WITH OTHER TRADES. MAKE ANY OFFSETS AS REQUIRED TO AVOID CONFLICT WITH, LIGHT FIXTURES, SKYLIGHTS, HVAC ETC.

C. CONTRACTOR SHALL COORDINATE ALL SHUT OFF VALVE LOCATIONS. SEE ARCHITECTURAL CEILING PLANS AND WALL PLANS.

D. WHERE BRACING DETAILS ARE NOT SHOWN ON THE DRAWING OR IN THE GUIDELINES, THE FIELD INSTALLATION SHALL BE SUBJECT TO THE APPROVAL OF THE ARCHITECT, MECHANICAL ENGINEER AND FIELD INSPECTOR OF THE GOVERNING AUTHORITY.

E. REFER TO ARCHITECTURAL GRAPHICS DRAWINGS FOR SIGNAGE NOT SHOW.

F. SEE ARCHITECTURAL DRAWINGS FOR EXACT LOCATION OF PLUMBING FIXTURES.

G. PROVIDE WALL CLEANOUTS FOR SINKS AND URINALS AS REQUIRED.

H. FOR ACCESSIBLE WATER CLOSETS, LOCATE VALVE HANDLE ON THE ACCESSIBLE SIDE PER ACCESSIBLE REQUIREMENTS.

J. ALL UNDERGROUND AND BELOW SLAB PIPING SHALL BE INSTALLED NO LESS THAN MINIMUM BURY PER CODE. ALL PIPING THROUGH SLAB, BURIED OR UNDERNEATH FOUNDATION SSD

SHEET NOTES

1. WATER ENTRANCE VALVE IN CHRISTY BOX PER DETAIL G/P-M7.1
2. PIPE HANGER PER DETAIL G/P-M7.2
3. 20 GALLONS ELECTRIC WATER HEATER MOUNTED IN PRE-FABRICATED PLATFORM PER DETAIL. A/P-M7.1
4. COLD WATER PIPE. HIGH AT GYM ALONG THE WALL. SEE DETAIL F/P-M7.2
5. GAS REGULATOR IN ENCLOSURE . SEE DETAIL C/P-M7.1
6. 1/2" CW DN IN WALL TO TRAP PRIMMER WITH ACCESS PANEL. 1/2" FLEX COPPER TO P-TRAP.
7. 1/2" CW DN IN WALL TO WATER HAMMER ARRESTOR WITH ACCESS PANEL.

WALL LEGENDS

NOTES:
S.S.D. FOR WOOD FRAMING SIZES FOR ALL BEARING WALLS. ALL OTHER WALLS ARE 2X6 WOOD STUDS U.O.N.

WOOD FRAMING - NON RATED

KEYPLAN

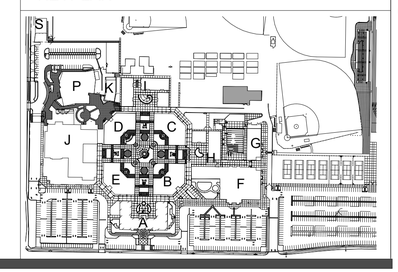

QUATTROCCHI KWOK ARCHITECTS
Main Office:
636 Fifth Street, Santa Rosa, CA 95404
East Bay:
55 Harrison Street, Suite 525,
Oakland, CA 94607
(707) 576-0829

SIGNED: OCTOBER 30, 2020

COSTA ENGINEERS INC.
3274 Villa Lane Napa, Ca 94558 ph. 707-252-9177 fax. 707-252-8473

REGISTERED PROFESSIONAL ENGINEER
CHRISTOPHER J. DEL CORE
No. 33000
Exp. 12-31-20
MECHANICAL
STATE OF CALIFORNIA

FREEDOM HIGH SCHOOL

NEW AUXILIARY GYMNASIUM

1050 NEROLY RD,
OAKLEY, CA 94561

LIBERTY UNION HIGH SCHOOL DISTRICT

DSA APP NO. 01-119278

ARCH PROJECT NO:	1869.00
DRAWN BY:	LM/MQ
DRAWING SCALE:	1/8" = 1'-0"
PTN: 61721-78	FILE NO: 7-H4

BID DOCUMENT

APRIL 27, 2021

SHEET TITLE

PLUMBING WATER & GAS

SHEET NUMBER

P-M2.2

4/27/2021 11:53:21 AM C:\Users\robert\Documents\20053 Freedom HS Auxiliary Gym RVT18_renglandd@costaengineers.com.rvt

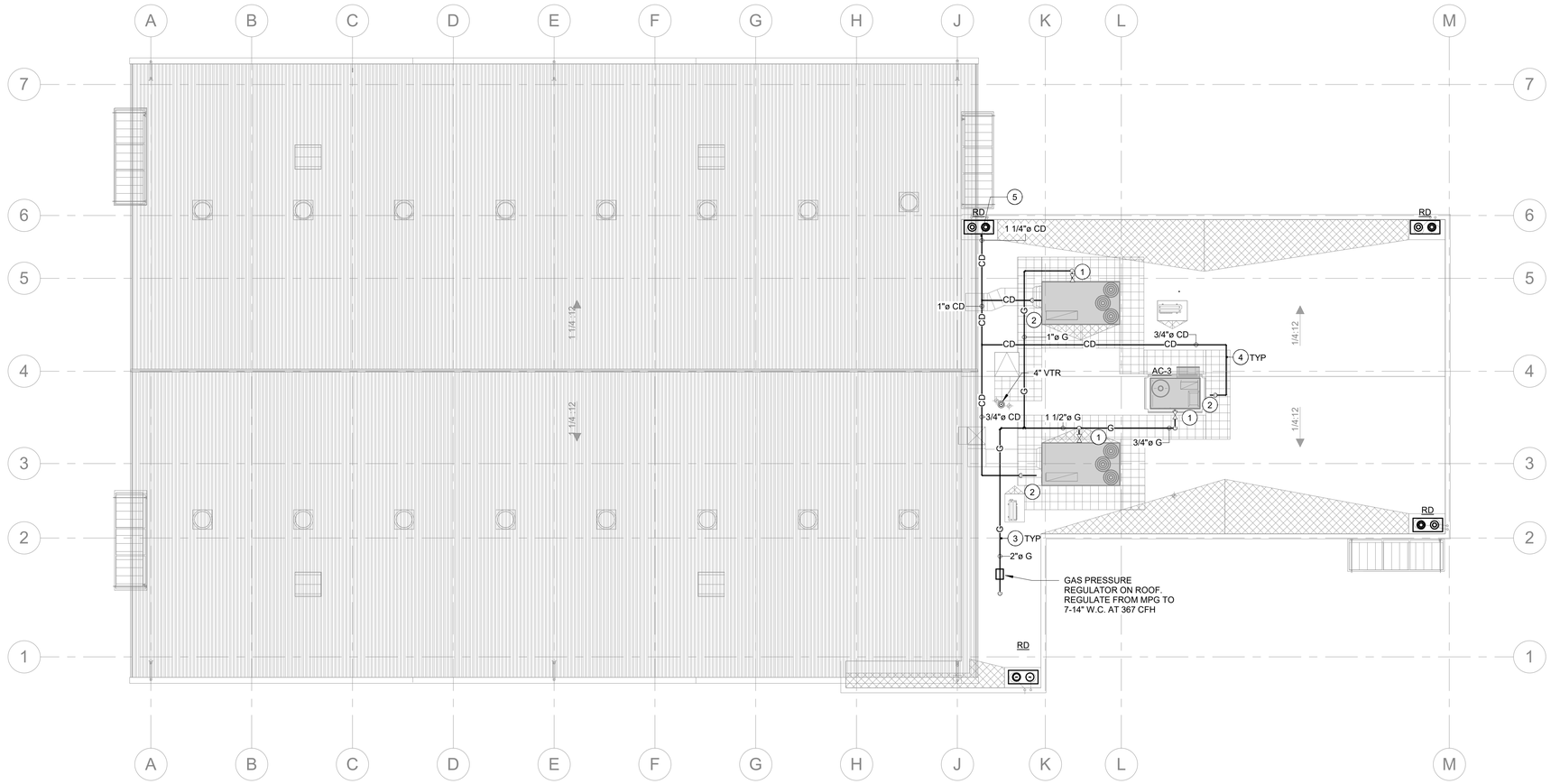

1 AUXILIARY GYM - PLUMBING ROOF PLAN

1/8" = 1'-0"

NORTH

0 4' 8' 16'

GENERAL NOTES

A. FOR PLUMBING GENERAL NOTES, LEGENDS, AND SYMBOLS, REFER TO SHEET P-M1.1

B. PLUMBING CONTRACTOR SHALL BE RESPONSIBLE FOR COORDINATING THE PLUMBING WORK WITH OTHER TRADES. MAKE ANY OFFSETS AS REQUIRED TO AVOID CONFLICT WITH, LIGHT FIXTURES, SKYLIGHTS, HVAC ETC.

C. CONTRACTOR SHALL COORDINATE ALL SHUT OFF VALVE LOCATIONS. SEE ARCHITECTURAL CEILING PLANS AND WALL PLANS.

D. WHERE BRACING DETAILS ARE NOT SHOWN ON THE DRAWING OR IN THE GUIDELINES, THE FIELD INSTALLATION SHALL BE SUBJECT TO THE APPROVAL OF THE ARCHITECT, MECHANICAL ENGINEER AND FIELD INSPECTOR OF THE GOVERNING AUTHORITY.

E. REFER TO ARCHITECTURAL GRAPHICS DRAWINGS FOR SIGNAGE NOT SHOW.

F. SEE ARCHITECTURAL DRAWINGS FOR EXACT LOCATION OF PLUMBING FIXTURES.

G. PROVIDE WALL CLEANOUTS FOR SINKS AND URINALS AS REQUIRED.

H. FOR ACCESSIBLE WATER CLOSETS, LOCATE VALVE HANDLE ON THE ACCESSIBLE SIDE PER ACCESSIBLE REQUIREMENTS.

J. ALL UNDERGROUND AND BELOW SLAB PIPING SHALL BE INSTALLED NO LESS THAN MINIMUM BURY PER CODE. ALL PIPING THROUGH SLAB, BURIED OR UNDERNEATH FOUNDATION SSD

SHEET NOTES

1. GAS CONNECTION TO AC UNIT PER DETAIL B/P-M7.1
2. CONDENSATE CONNECTION FROM AC UNIT PER DETAIL D/P-M7.1
3. GAS PIPE ON ROOF PER DETAIL H/P-M7.1
4. CONDENSATE PIPE ON ROOF PER DETAIL J/P-M7.1
5. CONDENSATE PIPE TO ROOF DRAIN PER DETAIL F/P-M7.1

WALL LEGENDS

NOTES:
S.S.D. FOR WOOD FRAMING SIZES FOR ALL BEARING WALLS. ALL OTHER WALLS ARE 2X6 WOOD STUDS U.O.N.

WOOD FRAMING - NON RATED

KEYPLAN

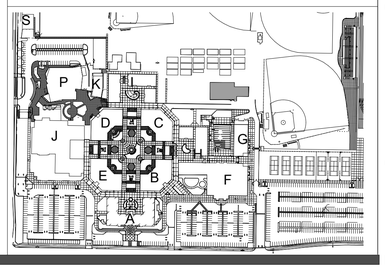

QUATTROCCHI KWOK ARCHITECTS
Main Office:
636 Fifth Street, Santa Rosa, CA 95404
East Bay:
55 Harrison Street, Suite 525,
Oakland, CA 94607
(707) 576-0829

SIGNED: OCTOBER 30, 2020

COSTA ENGINEERS INC.
3274 Villa Lane Napa, Ca 94558 p: 707-252-9177 fax: 707-252-9473

REGISTERED PROFESSIONAL ENGINEER
CHRISTOPHER J. DEL CORE
No. 33000
Exp. 12-31-20
MECHANICAL
STATE OF CALIFORNIA

FREEDOM HIGH SCHOOL

NEW AUXILIARY GYMNASIUM

1050 NEROLY RD,
OAKLEY, CA 94561

LIBERTY UNION HIGH SCHOOL DISTRICT

DSA APP NO. 01-119278

ARCH PROJECT NO:	1869.00
DRAWN BY:	MQ/LM
DRAWING SCALE:	1/8" = 1'-0"
PTN: 61721-78	FILE NO: 7-H4

BID DOCUMENT

APRIL 27, 2021

SHEET TITLE

PLUMBING ROOF PLAN

SHEET NUMBER

P-M3.1

4/27/2021 11:53:22 AM C:\Users\robert\Documents\20053 Freedom HS Auxiliary Gym RVT18_rengland@costaengineers.com.rvt

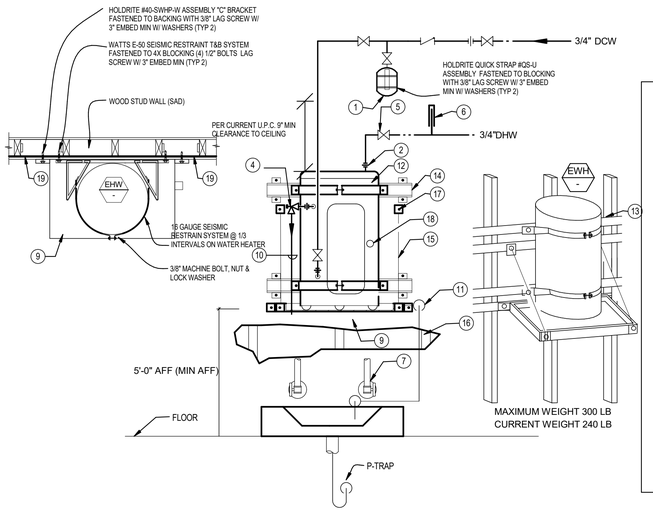

1. AMTROL ST-12 EXPANSION TANK
2. DIELECTRIC UNION (TYPICAL)
3. UNION (TYP.)
4. PRESSURE TEMPERATURE RELIEF VALVE
5. GATE VALVE (TYPICAL)
6. THERMOMETER (TYP)
7. 3/4"DCW/DHW WATER SUPPLY THRU WALL TO JANITORIAL SINK
8. NOT USED
9. HOLDRITE QUICK STAND #30-SWHP-WM WALL MOUNTED EQUIPMENT PLATFORM ASSEMBLY, MANUFACTURER ENGINEERED TO SUPPORT UP TO 20 US GALLONS OR EQUIPMENT UP TO 300 POUNDS TOTAL WEIGHT
10. FULL SIZE T & PRV DRAIN CONT. DN TO DRAIN INDIRECTLY INTO PAN WATER HEATER SUPPORT ASSEMBLY
11. 3/4" CD DRAIN FROM DRAIN PAN. TO DRAIN INDIRECTLY INTO SERVICE SINK MIN. 1" AIR GAP.
12. STORAGE-TYPE, ELECTRIC WATER HEATER. DISTANCE FROM WALL TO WATER HEATER PER CURRENT U.P.C. 9" MIN CLEARANCE TO CEILING (MAX. 375 LBS)
13. (2) 1/4" LAG SCREWS WITH 3" EMBED AT EA. AT 4X BLOCKING
14. WATTS E-50 SEISMIC RESTRAINT T&B SYSTEM FASTENED TO BACKING PLATE WITH (4) 1/2" BOLTS (TYP 2)
15. THREADED ROD (2): LOW CARBON STEEL, ZINC PLATED, 3/8" X29-3/4" LONG BY MANUFACTURER.
16. WOOD STUD BEHIND GYP-BD WALL @16" O.C (TYP)
17. HOLDRITE ASSEMBLY "45 DEGREE" BRACKET FASTENED TO BACKING WITH 3/8" LAG SCREW WITH 3" EMBED MIN W/ WASHERS (TYP 2)
18. ELECTRICAL CONNECTION
19. 4x BLOCKING (AS REQUIRED) WITH A34 EACH END, EACH SIDE (TYPICAL)

A EWH MOUNTING DETAIL & PIPING DIAGRAM

SCALE: NONE

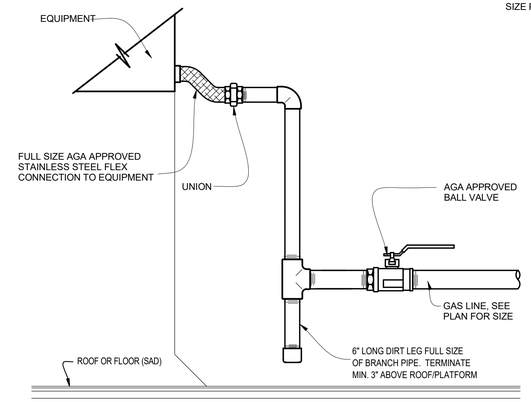

B GAS CONNECTION DETAIL

SCALE: NONE

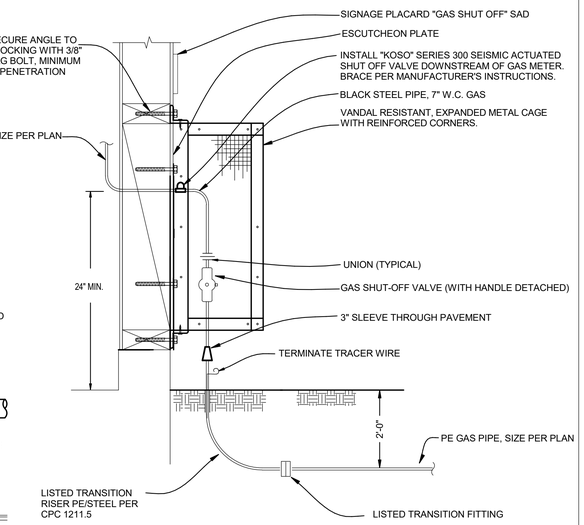

C GAS REGULATOR IN ENCLOSURE CAGE

SCALE: NONE

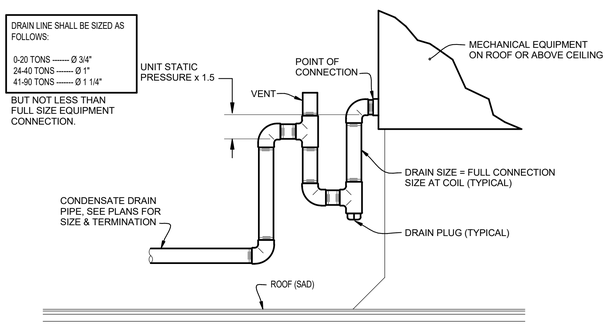

D TYPICAL CONDENSATE DRAIN DETAIL

SCALE: NONE

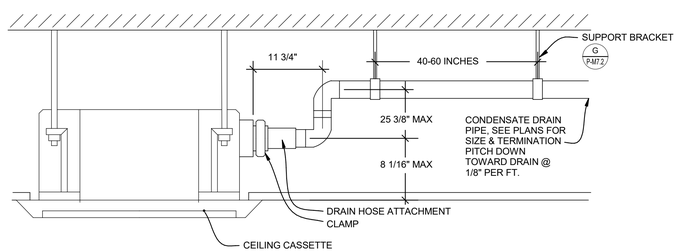

E TYPICAL CONDENSATE DRAIN FOR CEILING CASSETTE

SCALE: NONE

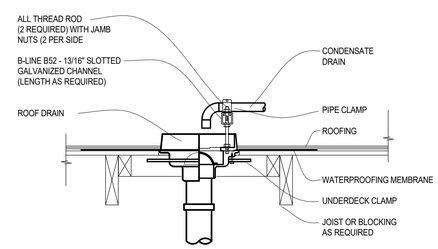

F CONDENSATE TO ROOF DRAIN

SCALE: NONE

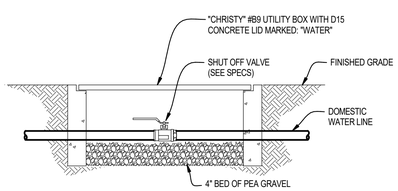

G DOMESTIC WATER SHUT-OFF

SCALE: NONE

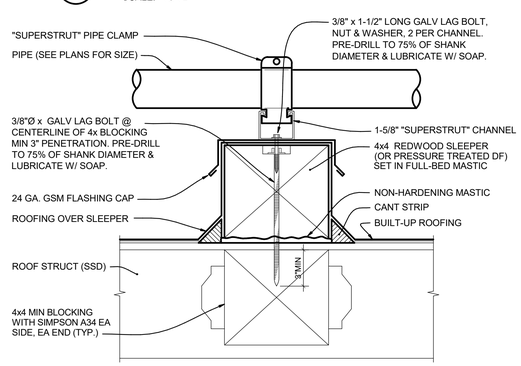

NOTES:
1. SUPPORTS SHALL BE AT 8'-0" ON CENTER & AT ALL CHANGE OF DIRECTION.
2. USE FOR SUPPORT OF GAS PIPING.

H GAS PIPE ON ROOF

SCALE: NONE

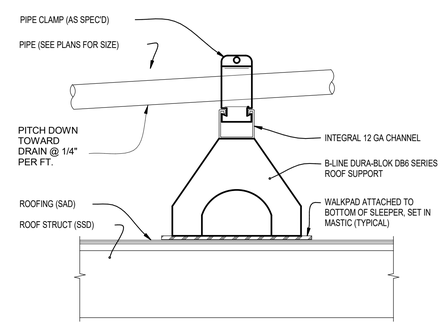

NOTES:
1. SUPPORTS SHALL BE AT 8'-0" ON CENTER & AT ALL CHANGE OF DIRECTION.
2. DO NOT USE FOR SUPPORT OF ANY GAS PIPING. THIS DETAIL IS FOR NON-GAS PIPE APPLICATION ONLY.

J PIPE SUPPORT ON ROOF DETAIL

SCALE: NONE

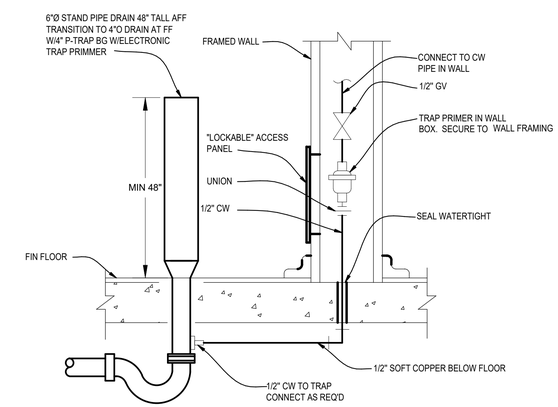

K FIRE STAND DRAIN

SCALE: NONE

QUATTROCCHI KWOK ARCHITECTS
Main Office:
636 Fifth Street, Santa Rosa, CA 95404
East Bay:
55 Harrison Street, Suite 525,
Oakland, CA 94607
(707) 576-0829

SIGNED: OCTOBER 30, 2020

COSTA ENGINEERS INC.
3274 Villa Lane Napa, Ca 94558 ph. 707-252-9177 fax: 707-252-8473
REGISTERED PROFESSIONAL ENGINEER
CHRISTOPHER J. DEL CORE
No. 38000
Exp. 12-31-20
MECHANICAL
STATE OF CALIFORNIA

FREEDOM HIGH SCHOOL

NEW AUXILIARY GYMNASIUM

1050 NEROLY RD,
OAKLEY, CA 94561

LIBERTY UNION HIGH SCHOOL DISTRICT

DSA APP NO. 01-119278

ARCH PROJECT NO:	1869.00
DRAWN BY:	MQ
DRAWING SCALE:	
PTN: 61721-78	FILE NO: 7-H4

BID DOCUMENT

APRIL 27, 2021

SHEET TITLE

PLUMBING DETAILS

SHEET NUMBER

P-M7.1

4/27/2021 11:53:22 AM C:\Users\robert\Documents\20053 Freedom HS Auxiliary Gym RVT18_rengland@costaengineers.com.rvt

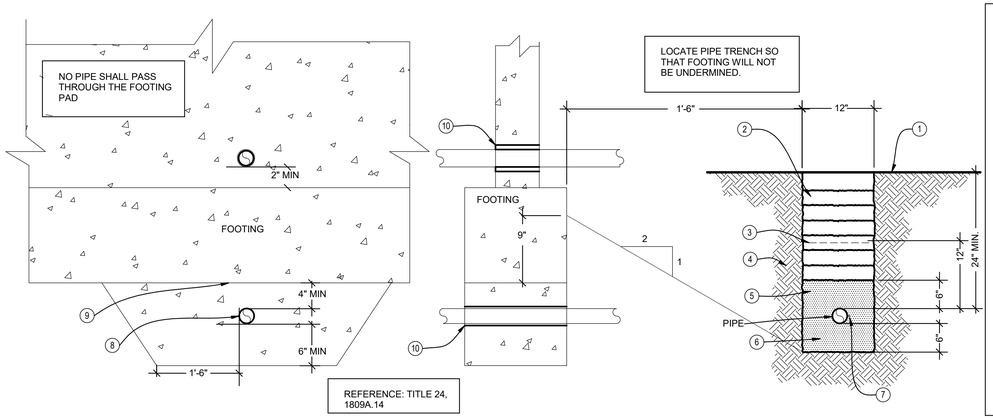

1. REPAIR ASPHALT PAVING OR CONCRETE TO MATCH EXISTING
2. BACK FILL IN 6" LAYERS. EACH LAYER TAMPED TO 95% MAX. DRY DENSITY PER ASTM D-1557-64T
3. WARNING TAP, 6" WIDE MINIMUM
4. UNDISTURBED EARTH
5. CLEAN SAND 6" ABOVE & BELOW PIPE
6. 6" CLEAR ALL AROUND
7. #12 SOLID COPPER TRACER WIRE ALONG ALL NONMETALLIC PIPING. ATTACH TO PIPE W/ "TY-WRAP" @ "TY-WRAP 8'-0" O.C.
8. PLACE CONCRETE FILL AROUND SLEEVES BEFORE POURING FOOTING PADS. FILL SHALL BE SAME W/IDTH AS FOOTING AND FULL PLACE CONCRETE FILL.
9. POUR JOINT
10. PROVIDE METAL SLEEVES WITH I.D. 2"GREATER THAN THE O.D. OF THE PIPE.

A PIPE TRENCH DETAIL & FOOTING PENETRATIONS

SCALE: NONE

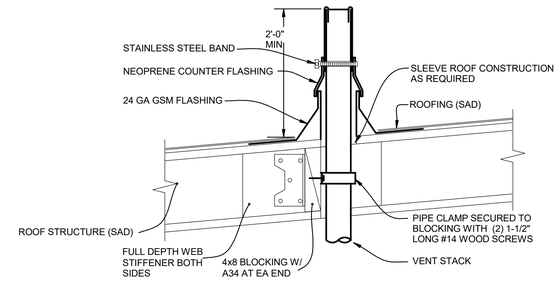

B VENT THRU ROOF DETAIL

SCALE: NONE

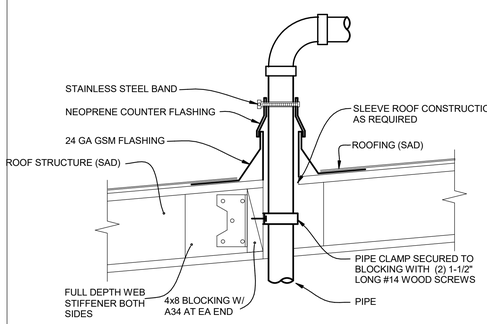

C PIPE THRU ROOF

SCALE: NONE

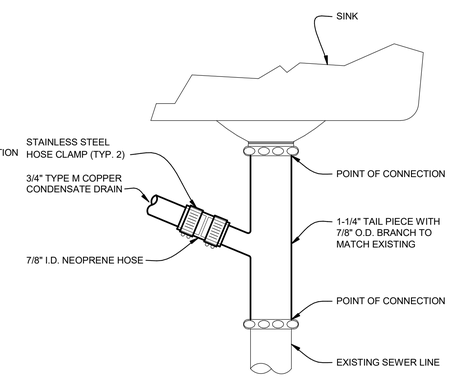

D CONDENSATE TERMINATIONS

SCALE: NONE

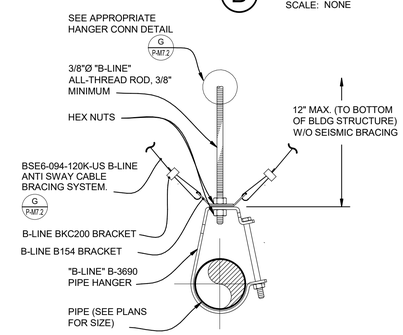

MINIMUM ROD SIZES (INCHES)	PIPE DIAMETER (INCHES)
3/8"	2" & SMALLER PIPE
1/2"	2-1/2" & 3" PIPE

E TYPICAL PIPE HANGER DETAILS

SCALE: NONE

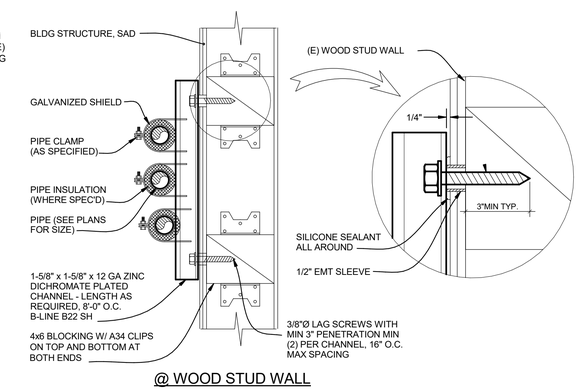

F PLUMBING CHANNEL SUPPORT DETAIL

SCALE: NONE

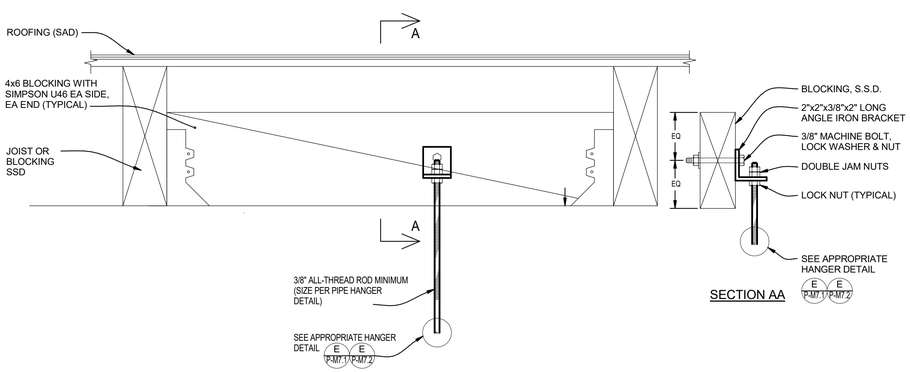

G HANGER CONNECTION DETAILS

SCALE: NONE

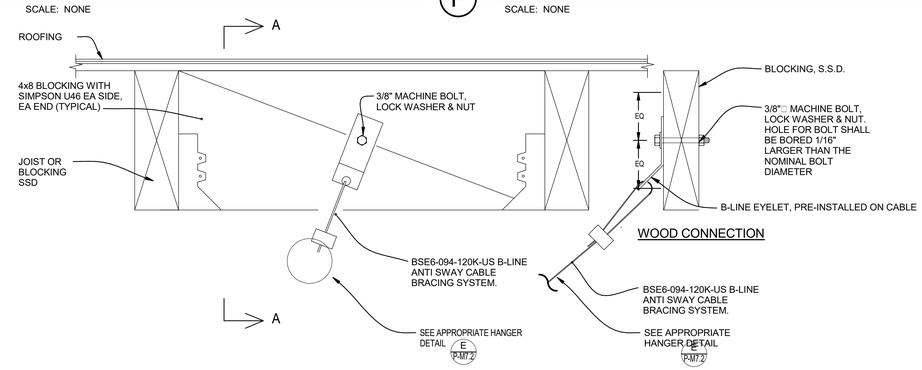

H ANTI SWAY CABLE CONNECTION DETAIL

SCALE: NONE

QUATTROCCHI KWOK ARCHITECTS

Main Office:
636 Fifth Street, Santa Rosa, CA 95404
East Bay:
55 Harrison Street, Suite 525,
Oakland, CA 94607
(707) 576-0829

SIGNED: OCTOBER 30, 2020

COSTA ENGINEERS INC.
3274 Villa Lane Napa, Ca 94558 ph. 707-252-9177 fax: 707-252-9473

REGISTERED PROFESSIONAL ENGINEER
CHRISTOPHER J. DEL CORE
No. 33000
Exp. 12-31-20
MECHANICAL
STATE OF CALIFORNIA

FREEDOM HIGH SCHOOL

NEW AUXILIARY GYMNASIUM

1050 NEROLY RD,
OAKLEY, CA 94561

LIBERTY UNION HIGH SCHOOL DISTRICT

DSA APP NO. 01-119278

ARCH PROJECT NO:	1869.00
DRAWN BY:	MQ
DRAWING SCALE:	
PTN: 61721-78	FILE NO: 7-H4

BID DOCUMENT

APRIL 27, 2021

SHEET TITLE

PLUMBING DETAILS

SHEET NUMBER

P-M7.2

4/27/2021 11:53:22 AM C:\Users\robert\Documents\20053 Freedom HS Auxiliary Gym RVT18_rengland@costaengineers.com.rvt

ELECTRICAL EQUIPMENT ANCHORAGE

ELECTRICAL ANCHORAGE NOTES:

ALL ELECTRICAL COMPONENTS SHALL BE ANCHORED AND INSTALLED PER THE DETAILS ON THE DSA APPROVED CONSTRUCTION DOCUMENTS. THE FOLLOWING COMPONENTS SHALL BE ANCHORED OR BRACED TO MEET THE FORCE AND DISPLACEMENT REQUIREMENTS PRESCRIBED IN THE 2019 CBC, SECTIONS 1617A.1.18 THROUGH 1617A.1.26 AND ASCE 7-16, CHAPTER 13, 26, AND 30.

1. ALL PERMANENT EQUIPMENT AND COMPONENTS.
2. TEMPORARY, MOVABLE OR MOBILE EQUIPMENT THAT IS PERMANENTLY ATTACHED (e.g. HARD WIRED) TO THE BUILDING UTILITY SERVICES SUCH AS ELECTRICITY, GAS OR WATER. "PERMANENTLY ATTACHED" SHALL INCLUDE ALL ELECTRICAL CONNECTIONS EXCEPT PLUGS FOR 110/220 VOLT RECEPTACLES HAVING A FLEXIBLE CABLE.
3. TEMPORARY, MOVABLE OR MOBILE EQUIPMENT WHICH IS HEAVIER THAN 400 POUNDS OR HAS A CENTER OF MASS LOCATED 4 FEET OR MORE ABOVE THE ADJACENT FLOOR OR ROOF LEVEL THAT DIRECTLY SUPPORT THE COMPONENT IS REQUIRED TO BE RESTRAINED IN A MANNER APPROVED BY DSA.

THE FOLLOWING ELECTRICAL COMPONENTS SHALL BE BE POSITIVELY ATTACHED TO THE STRUCTURE, BUT NEED NOT DEMONSTRATE DESIGN COMPLIANCE WITH THE REFERENCES NOTED ABOVE. THESE COMPONENTS SHALL HAVE FLEXIBLE CONNECTIONS PROVIDED BETWEEN THE COMPONENT AND ASSOCIATED CONDUIT. FLEXIBLE CONNECTIONS MUST ALLOW MOVEMENT IN BOTH TRANSVERSE AND LONGITUDINAL DIRECTIONS.

A. COMPONENT WEIGHING LESS THAN 400 POUNDS AND HAVE A CENTER OF MASS LOCATED 4 FEET OR LESS ABOVE THE ADJACENT FLOOR OR ROOF LEVEL THAT DIRECTLY SUPPORT THE COMPONENT.
B. COMPONENTS WEIGHING LESS THAN 20 POUNDS, OR IN THE CASE OF DISTRIBUTED SYSTEMS, LESS THAN 5 POUNDS PER FOOT, WHICH ARE SUSPENDED FROM A ROOF OR FLOOR OR HUNG FROM WALL.

THE ANCHORAGE OF ALL ELECTRICAL COMPONENTS SHALL BE SUBJECT TO THE APPROVAL OF THE DESIGN PROFESSIONAL IN GENERAL RESPONSIBLE CHARGE OR STRUCTURAL ENGINEER DELEGATED RESPONSIBILITY AND ACCEPTANCE BY DSA. THE PROJECT INSPECTOR WILL VERIFY THAT ALL COMPONENTS AND EQUIPMENT HAVE BEEN ANCHORED IN ACCORDANCE WITH THE ABOVE REQUIREMENTS.

ELECTRICAL DISTRIBUTION SYSTEM BRACING NOTE:

ELECTRICAL DISTRIBUTION SYSTEMS SHALL BE BRACED TO COMPLY WITH THE FORCES AND DISPLACEMENTS PRESCRIBED IN ASCE 7-16 SECTION 13.3 AS DEFINED IN ASCE 7-16 SECTION 13.6.5, 13.6.6, 13.6.7, 13.6.8, AND 2019 CBC, SECTIONS 1617A.1.24, 1617A.1.25, AND 1617A.1.26.

THE METHOD OF SHOWING BRACING AND ATTACHMENTS TO THE STRUCTURE FOR THE IDENTIFIED DISTRIBUTION SYSTEM ARE AS NOTED BELOW. WHEN BRACING AND ATTACHMENTS ARE BASED ON A PREAPPROVED INSTALLATION GUIDE (eg., OSHPD OPM FOR 2013 CBC), COPIES OF THE BRACING SYSTEM INSTALLATION GUIDE OR MANUAL SHALL BE AVAILABLE ON THE JOBSITE PRIOR TO THE START OF AND DURING THE HANGING AND BRACING OF THE DISTRIBUTION SYSTEMS. THE STRUCTURAL ENGINEER OF RECORD SHALL VERIFY THE ADEQUACY OF THE STRUCTURE TO SUPPORT THE HANGER AND BRACE LOADS.

ELECTRICAL DISTRIBUTION SYSTEMS ARE: DETAILED ON THE APPROVED DRAWINGS WITH PROJECT SPECIFIC NOTES AND DETAILS.

LIGHT FIXTURES:

ALL LIGHT FIXTURES SHALL BE POSITIVELY ATTACHED TO THE CEILING SUSPENSION SYSTEMS BY MECHANICAL MEANS TO RESIST A HORIZONTAL FORCE EQUAL TO THE WEIGHT OF THE FIXTURE. A MINIMUM OF TWO SCREWS OR APPROVED FASTENERS ARE REQUIRED AT EACH LIGHT FIXTURE, PER ASTM E580, SECTION 5.3.1.

SURFACE-MOUNTED LIGHT FIXTURES SHALL BE ATTACHED TO THE MAIN RUNNER WITH AT LEAST TWO POSITIVE CLAMPING DEVICES. THE CLAMPING DEVICE SHALL COMPLETELY SURROUND THE SUPPORTING CEILING RUNNER AND BE MADE OF STEEL WITH A MINIMUM THICKNESS OF #14 GAGE. ROTATIONAL SPRING CATCHES DO NOT COMPLY. A #12 GAGE SLACK SAFETY WIRE SHALL BE CONNECTED FROM EACH CLAMPING DEVICE TO THE STRUCTURE ABOVE. PROVIDE ADDITIONAL SUPPORTS WHEN LIGHT FIXTURES ARE EIGHT (8) FEET OR LONGER OR EXCEED 56 LB. MAXIMUM SPACING BETWEEN SUPPORTS SHALL NOT EXCEED EIGHT (8) FEET.

LIGHT FIXTURES WEIGHING LESS THAN OR EQUAL TO 10 LB. SHALL HAVE A MINIMUM OF ONE (1) #12 GAGE SLACK SAFETY WIRE CONNECTED FROM THE FIXTURE HOUSING TO THE STRUCTURE ABOVE.

LIGHT FIXTURES WEIGHING GREATER THAN 10 LB. BUT LESS THAN OR EQUAL TO 56 LBS. MAY BE SUPPORTED DIRECTLY ON THE CEILING RUNNERS, BUT THEY SHALL HAVE A MINIMUM OF TWO (2) #12 GAGE SLACK SAFETY WIRES CONNECTED FROM THE FIXTURE HOUSING AT DIAGONAL CORNERS TO THE STRUCTURE ABOVE. EXCEPTION: ALL LIGHT FIXTURES GREATER THAN TWO BY FOUR FEET WEIGHING LESS THAN 56 LBS. SHALL HAVE A #12 GAGE SLACK SAFETY WIRE AT EACH CORNER.

ALL LIGHT FIXTURES WEIGHING GREATER THAN 56 LB. SHALL BE INDEPENDENTLY SUPPORTED BY NOT LESS THAN FOUR (4) TAUT #12 GAGE HANGER WIRES (ONE AT EACH CORNER) ATTACHED FROM THE FIXTURE HOUSING TO THE STRUCTURE ABOVE OR OTHER APPROVED HANGERS. THE FOUR (4) TAUT #12 GAGE WIRES OR OTHER APPROVED HANGERS, INCLUDING THEIR ATTACHMENT TO THE STRUCTURE ABOVE, SHALL BE CAPABLE OF SUPPORTING FOUR (4) TIMES THE WEIGHT OF THE FIXTURE.

GENERAL DEMOLITION NOTES

1. THE CONTRACTOR SHALL VERIFY IN THE FIELD ALL LINES, LEVELS, DIMENSIONS AND EXISTING CONDITIONS. THE INFORMATION ON THE DRAWINGS REGARDING EXISTING ELECTRICAL EQUIPMENT AND BRANCH CIRCUITS IS THE RESULT OF FIELD SURVEY AND IS ACCURATE TO THE BEST OF OUR KNOWLEDGE. IT IS INTENDED, HOWEVER, AS A GUIDE FOR USE IN VERIFICATION ONLY.
2. ANY EXISTING ELECTRICAL EQUIPMENT IN THE AREA OF NEW CONSTRUCTION NOT SHOWN ON THE EXISTING PLANS SHALL BE DOCUMENTED AND SUBMITTED TO THE ENGINEER FOR DETERMINATION OF ACTION REQUIRED.
3. WHEREVER THE REMOVAL OF EXISTING ELECTRICAL EQUIPMENT IS CALLED FOR AND ALL EQUIPMENT ON A PARTICULAR BRANCH CIRCUIT IS TO BE REMOVED, ALL CONDUIT AND WIRE BACK TO THE PANEL SHALL BE ENTIRELY REMOVED AND THE CIRCUIT IN PANEL SHALL BE MARKED "SPARE". THIS APPLIES TO SIGNAL AND COMMUNICATIONS SYSTEMS EQUIPMENT, CONDUIT, AND WIRE AS WELL.
4. WHEREVER THE REMOVAL OF EXISTING ELECTRICAL EQUIPMENT IS CALLED FOR AND ALL EQUIPMENT ON A PARTICULAR BRANCH CIRCUIT IS NOT TO BE REMOVED, THE CIRCUIT SHALL BE MAINTAINED CONTINUOUS TO THE EXISTING EQUIPMENT IN USE WITH MINIMUM INTERRUPTIONS OF POWER. THIS APPLIES TO SIGNAL AND COMMUNICATIONS SYSTEMS EQUIPMENT, CONDUIT, AND WIRE AS WELL.
5. WHENEVER THE REMOVAL OF EXISTING CONSTRUCTION REVEALS ELECTRICAL WORK THAT IS TO REMAIN, BUT IS IN CONFLICT WITH NEW CONSTRUCTION, RELOCATE THE EXISTING ELECTRICAL WORK AS NECESSARY TO AVOID ANY CONFLICT. RELOCATION WORK SHALL BE DONE TO MINIMIZE ANY INTERRUPTIONS OF POWER.
6. CARE SHALL BE TAKEN IN ORDER TO IDENTIFY AND PROTECT ALL EXISTING ELECTRICAL WORK THAT IS TO REMAIN.
7. ENSURE RECONNECTION OF EXISTING DEVICES WHOSE CIRCUITS HAVE BEEN INTERRUPTED BY DEMOLITION BY PROVIDING NEW CONNECTION TO ANOTHER EXISTING TO REMAIN DEVICE OR PANEL.
8. ALL EXISTING ELECTRICAL EQUIPMENT SHOWN ON THE PLANS FOR NEW WORK ARE THOSE WHICH ARE TO BE REUSED DURING SOME PHASE OF THE NEW CONSTRUCTION OR REQUIRE SOME SPECIAL CONSIDERATIONS.
9. WHENEVER THE REMOVAL OF EXISTING ELECTRICAL PANELBOARDS ARE CALLED FOR AND ALL EXISTING BRANCH CIRCUITS ARE NOT TO BE REMOVED, THE EXISTING BRANCH CIRCUITS SHALL BE CONNECTED TO OTHER EXISTING ELECTRICAL EQUIPMENT OR PANELS STILL IN USE WITH MINIMUM INTERRUPTIONS OF POWER. ALSO, IF REQUIRED, THESE SAME BRANCH CIRCUITS SHALL BE RECONNECTED TO RELOCATED EXISTING OR NEW PANELBOARDS AS PART OF THE NEW CONSTRUCTION. THIS APPLIES TO SIGNAL AND COMMUNICATIONS SYSTEMS EQUIPMENT, CONDUIT AND WIRE AS WELL.
10. THE ELECTRICAL CONTRACTOR SHALL REVISE EXISTING PANEL SCHEDULES TO CORRESPOND TO ACTUAL CONDITIONS AFTER ALL DEMOLITION AND NEW WORK IS COMPLETED.
11. REMOVE ALL ABANDONED CONDUIT AND WIRE ABOVE CEILINGS.
12. WHEN ELECTRICAL EQUIPMENT OR DEVICE IS REMOVED FROM AN EXISTING WALL OR CEILING WHICH IS TO REMAIN, PATCH ABANDONED OPENINGS TO MATCH EXISTING FINISH.
13. IN GENERAL, THE DEMOLITION PLANS SHOW ALL EXISTING EQUIPMENT THAT IS TO BE REMOVED UNLESS NOTED OTHERWISE. HOWEVER, ELECTRICAL EQUIPMENT, WHETHER SHOWN ON THIS DRAWING OR NOT, WHERE LOCATED IN THE AREA SCHEDULED TO BE DEMOLISHED, SHALL BE REMOVED COMPLETELY (INCLUDING CONDUIT AND WIRES BACK TO THE LAST REMAINING FIXTURE, OUTLET, DEVICE, ETC.) UNLESS OTHERWISE NOTED. COORDINATE DEMOLITION WORK WITH ARCHITECT AND GENERAL CONTRACTOR.
14. EXISTING CONDUIT FEEDS UP THROUGH FLOOR SHALL BE CUT OFF AND PLUGGED FLUSH WITH FLOOR WHERE EXISTING WALLS, ETC., ARE REMOVED. REMOVE CONDUCTORS FROM THE POINT BACK TO LAST OUTLET REMAINING IN SERVICE.
15. IT SHALL BE THE RESPONSIBILITY OF THIS CONTRACTOR TO MAINTAIN CONTINUITY OF ALL ELECTRICAL SYSTEMS, EQUIPMENT, ETC. REMAINING IN OPERATION WHICH IS BEING FED BY AN ABANDONED OUTLET. MAINTAINING CONTINUITY SHALL CONSIST OF REROUTING OF CONDUIT, WIRE, ETC. AS REQUIRED.
16. IT SHALL BE THIS CONTRACTOR'S RESPONSIBILITY TO VERIFY LOCATIONS OF EXISTING CIRCUITS AND ADJUST CIRCUIT NUMBERS ACCORDING TO EXISTING CONDITIONS IF REQUIRED
17. THE ELECTRICAL CONTRACTOR SHALL COORDINATE WITH THE OWNER PRIOR TO REMOVAL OF EXISTING ELECTRICAL EQUIPMENT AND TURN OVER REMOVED EQUIPMENT THAT THE OWNER REQUESTS, IN AS-FOUND CONDITION. EQUIPMENT THAT IS TO BE TURNED OVER SHALL BE BOXED AND TAGGED TO IDENTIFY THE SPECIFIC EQUIPMENT. EQUIPMENT TO BE TEMPORARILY REMOVED DUE TO THE CONSTRUCTION SHALL BE CLEANED AND RE-INSTALLED IN ITS ORIGINAL CONDITION OR AS REQUIRED.
18. WHERE EXISTING WALLS HAVE BEEN REMOVED, AND THERE ARE EXISTING CONDUIT FEEDS WHICH HAVE BEEN CUT OFF AND CAPPED FLUSH WITH THE FLOOR, IT IS THE CONTRACTOR'S RESPONSIBILITY TO IDENTIFY AND DIMENSION ALL SUCH CONDUITS ON THE "AS-BUILT" DRAWINGS.
19. IF ANY EQUIPMENT THAT IS SCHEDULED TO REMAIN IN OPERATION IS DAMAGED BY THE CONTRACTOR, IT SHALL BE REPLACED TO ITS ORIGINAL CONDITION SATISFACTORY TO THE OWNER AT CONTRACTOR'S EXPENSE.

SYMBOLS LIST

Symbol	Description
H	FIRE ALARM SYSTEM MAGNETIC DOOR HOLD-OPEN
B	WALL-MOUNTED BEAM SMOKE DETECTOR - TRANSMITTING UNIT; MOUNT 18" BELOW CEILING LEVEL, U.O.N.
B	WALL-MOUNTED BEAM SMOKE DETECTOR - RECEIVING UNIT; MOUNT IN EXACT HORIZONTAL & VERTICAL ALIGNMENT WITH CORRESPONDING TRANSMITTING UNIT
B	CEILING-MOUNTED BEAM SMOKE DETECTOR - TRANSMITTING UNIT
B	CEILING-MOUNTED BEAM SMOKE DETECTOR - RECEIVING UNIT; MOUNT IN EXACT HORIZONTAL & VERTICAL ALIGNMENT WITH CORRESPONDING TRANSMITTING UNIT
	FIRE ALARM SYSTEM END-OF-LINE RESISTOR
FSD	FIRE SMOKE DAMPER BY MECHANICAL. COORDINATE WITH MECHANICAL FOR MONITORING TO FIRE ALARM SYSTEM (INCLUDING SMOKE DETECTOR PROVISIONS). CONTROL OF DAMPER TO BE BY MECHANICAL, U.O.N. PROVIDE TOGGLE TYPE DISCONNECT SWITCH
FACP	FIRE ALARM CONTROL PANEL
FAAP	FIRE ALARM ANNUNCIATOR PANEL
	WEATHERPROOF ENCLOSURE
	CONDUIT AND WIRE CONCEALED IN CEILING OR WALL
	CONDUIT AND WIRE CONCEALED IN OR UNDER SLAB OR UNDERGROUND
	CONDUIT AND WIRE RUN EXPOSED
	CROSSMARKS INDICATE QUANTITY OF #12 CONDUCTORS PLUS PARITY SIZED GROUND CONDUCTOR. NO HASHMARKS INDICATES (2) #12 CONDUCTORS PLUS PARITY SIZED GROUND CONDUCTOR, U.O.N.
	GROUND WIRE
(#10)	WIRE SIZE 10 AWG FOR ALL CONDUCTORS, INCLUDING GROUND WIRE, THROUGHOUT THE COMPLETE CIRCUIT
	FLEXIBLE METALLIC CONDUIT
	HOMERUN TO PANELBOARD OR TERMINAL BOARD, AS NOTED ON PLANS
	COMPLETE CONNECTION OF EQUIPMENT
	CONDUIT STUBBED OUT, CAPPED AND MARKED
	CONDUIT TURNED UP
	CONDUIT TURNED DOWN
T	TELEPHONE SYSTEM CONDUIT AND PULLWIRE; 3/4" U.O.N.
C	COMPUTER/DATA SYSTEM CONDUIT AND PULLWIRE; 3/4" U.O.N.
D	TELEPHONE/DATA SYSTEM CONDUIT AND PULLWIRE; 3/4" U.O.N.
G	#4/0 COPPER GROUNDING ELECTRODE CONDUCTOR, U.O.N.
AC-1	MECHANICAL EQUIPMENT DESIGNATION - SEE MECHANICAL PLANS
3 / E-6	DETAIL DESIGNATION - SEE DETAIL 3, SHEET E-6
1	NUMBERED SHEET NOTE
M	UTILITY METER
CT'S	CURRENT TRANSFORMERS
30A / 3P	CIRCUIT BREAKER. NUMBER INDICATES 30A 3-POLE
1504N	FEEDER SIZE - SEE POWER SINGLE LINE DIAGRAMS & FEEDER SCHEDULE
AV-A1	AV OUTLET / DEVICE DESIGNATION. SEE AV DRAWINGS.

ABBREVIATIONS

AFF	ABOVE FINISHED FLOOR
AFG	ABOVE FINISHED GRADE
C	CONDUIT
CATV	CABLE TV
CO	CONDUIT ONLY
CU	COPPER
E.C.	ELECTRICAL CONTRACTOR
E	EMERGENCY LIGHT FIXTURE ON EMERGENCY GENERATOR OR INVERTER, SWITCHABLE, U.O.N.
EM	EMERGENCY LIGHT FIXTURE WITH BATTERY PACK, SWITCHABLE
EMS	ENERGY MANAGEMENT SYSTEM
(E)	EXISTING
EQPT	EQUIPMENT
(ER)	EXISTING EQUIPMENT TO BE RELOCATED
(EX)	EXISTING EQUIPMENT TO BE DISCONNECTED AND REMOVED
EXT	EXTERIOR
FMC	FLEXIBLE METALLIC CONDUIT
FTL	FEED THROUGH LUGS
GFI	GROUND FAULT CIRCUIT INTERRUPTING TYPE RECEPTACLE
IDF	INTERMEDIATE DISTRIBUTION FRAME
L	LOCKABLE
LV	LOW VOLTAGE
MCB	MAIN CIRCUIT BREAKER
MDF	MAIN DISTRIBUTION FRAME
MFR	MANUFACTURER
MLO	MAIN LUGS ONLY
MTD	MOUNTED
(N)	NEW
N.E.C.	NATIONAL ELECTRICAL CODE
NEU	NEUTRAL
N.I.E.C.	NOT IN ELECTRICAL CONTRACT
O.A.H.	OVERALL HEIGHT
O.F.C.I.	OWNER FURNISHED, CONTRACTOR INSTALLED
P	INDICATES FIXTURES ON PHOTOCELL CONTROL
PA	PUBLIC ADDRESS
PNL	PANEL
S.A.D.	SEE ARCHITECTURAL DRAWINGS
STC	SIGNAL TERMINAL CABINET
TC	INDICATES FIXTURES ON TIMECLOCK CONTROL
TELE	TELEPHONE
TVSS	TRANSIENT VOLTAGE SURGE SUPPRESSION
U.O.N.	UNLESS OTHERWISE NOTED
VAV	VAV BOX, SEE MECHANICAL DIVISION DRAWINGS FOR LOCATIONS. PROVIDE TOGGLE TYPE DISCONNECT SWITCH
WP	WEATHER PROOF, NEMA 3R
WPIU	WEATHER PROOF WHILE IN USE

SYMBOLS LIST

Symbol	Description
	MAIN SWITCHBOARD, DISTRIBUTION PANEL OR MOTOR CONTROL CENTER
	FLUSH MOUNTED PANELBOARD, 6'-6" TO TOP
	SURFACE MOUNTED PANELBOARD, 6'-6" TO TOP
	FUSED EQUIPMENT DISCONNECT SWITCH WITH FUSE SIZE AS RECOMMENDED BY EQUIPMENT MANUFACTURER
	MOTOR DISCONNECT SWITCH; HORSEPOWER RATED, NON FUSE
	COMBINATION MAGNETIC MOTOR STARTER & MOTOR CIRCUIT PROTECTOR
	MAGNETIC MOTOR STARTER
VFD	VARIABLE FREQUENCY DRIVE, FURNISHED BY MECHANICAL, INSTALLED & CONNECTED COMPLETE BY ELECTRICAL
	MANUAL MOTOR STARTER WITH OVERLOAD PROTECTION
	MOTOR WITH FLEXIBLE CONDUIT CONNECTION AND DISCONNECT
T	TRANSFORMER
	CONCRETE PULLBOX, SIZE AS REQUIRED OR SHOWN - CHRISTY OR EQUAL WITH LABELED LID PER USE
	COPPER GROUND ROD
J	FLUSH CEILING MOUNTED JUNCTION BOX, U.O.N.
J	FLUSH WALL MOUNTED JUNCTION BOX, UP 18" U.O.N.
J	JUNCTION BOX FLUSH FLOOR MOUNTED
	20A 3PG 125V DUPLEX RECEPTACLE, UP 18" U.O.N.
	20A 3PG 125V DUPLEX RECEPTACLE, WEATHERPROOF, UP 18" U.O.N.
GFI	20A 3PG 125V DUPLEX RECEPTACLE, GROUND FAULT CIRCUIT INTERRUPTER TYPE, UP 18" U.O.N.
IG	20A 3PG 125V DUPLEX RECEPTACLE, ISOLATED GROUND TYPE, UP 18" U.O.N.
	20A 3PG 125V DUPLEX RECEPTACLE, MOUNTED ABOVE COUNTER, U.O.N.
	20A 3PG 125V DOUBLE DUPLEX RECEPTACLE, UP 18" U.O.N.
	20A 3PG 125V DOUBLE DUPLEX RECEPTACLE, MOUNTED ABOVE COUNTER, U.O.N.
	20A 3PG 125V SINGLE RECEPTACLE, UP 18" U.O.N.
	20A 3PG 125V SINGLE TWISTLOCK RECEPTACLE, NEMA L5-20R, UP 18" U.O.N.
	SPECIAL RECEPTACLE AS INDICATED ON PLANS
	CONTROLLED AND IDENTIFIED (SPLIT-WIRED) DUPLEX RECEPTACLE, WITH ONE HALF OF RECEPTACLE WIRED THROUGH LOCAL PLUG-LOAD CONTROLLER, UP 18" U.O.N.
	CONTROLLED DUPLEX RECEPTACLE WIRED THROUGH LOCAL PLUG-LOAD CONTROLLER, UP 18" U.O.N.
	FLUSH IN FLOOR OUTLET BOX WITH QUANTITY OF 20A 3PG 125V DUPLEX RECEPTACLES AS INDICATED ON PLANS
	FLUSH CEILING MTD. DUPLEX OUTLET, 20A 3PG
	SURFACE MOUNTED WIREMOLD RACEWAY WITH RECEPTACLES AS INDICATED ON PLANS
	TERMINAL MOUNTING BACKBOARD, 3/4" PLYWOOD, DIMENSIONS AS NOTED ON PLANS, PAINT TO MATCH ADJACENT WALL SURFACE, MAINTAINING UL FIRE LABEL VISIBLE
(2)	COMBINED TELEPHONE/DATA OUTLET, UP 18" U.O.N.
	NUMBER INDICATES QUANTITY OF DATA OUTLET JACKS
	COMBINED VOICE/DATA OUTLET, MOUNTED ABOVE COUNTER U.O.N.
	INTERCOM HANDSET, UP 48" U.O.N.
C	COMBINED VOICE/DATA OUTLET, CEILING MOUNTED
	WALL MOUNTED SIGNAL SYSTEM CLOCK, UP 96" U.O.N.
TV	WALL MOUNTED VIDEO OUTLET, UP 18" U.O.N.
S	FLUSH WALL MOUNTED INDOOR PUBLIC ADDRESS SPEAKER, UP 96" U.O.N.
S	FLUSH WALL MOUNTED OUTDOOR WEATHERPROOF PUBLIC ADDRESS SPEAKER
S	FLUSH CEILING MOUNTED INDOOR PUBLIC ADDRESS SPEAKER
S	FLUSH WALL MOUNTED INDOOR PUBLIC ADDRESS SPEAKER & SIGNAL SYSTEM CLOCK, UP 96" U.O.N.
S 110	FIRE ALARM SYSTEM STROBE, UP 80" U.O.N. NUMBER ADJACENT INDICATES CANDELA VALUE FOR STROBE
S 110	FIRE ALARM SYSTEM STROBE, CEILING MOUNTED. NUMBER ADJACENT INDICATES CANDELA VALUE FOR STROBE
H	WEATHERPROOF FIRE ALARM SYSTEM HORN, UP 90" U.O.N.
V 110	FIRE ALARM SYSTEM SPEAKER/STROBE, UP 80" U.O.N. NUMBER ADJACENT INDICATES CANDELA VALUE FOR STROBE
V 110	FIRE ALARM SYSTEM SPEAKER/STROBE, CEILING MOUNTED. NUMBER ADJACENT INDICATES CANDELA VALUE FOR STROBE
S	FIRE ALARM SYSTEM SPEAKER, UP 90" U.O.N.
S	WEATHERPROOF FIRE ALARM SYSTEM SPEAKER, UP 90" U.O.N.
S	FIRE ALARM SYSTEM SPEAKER, CEILING MOUNTED
D	WALL MOUNTED ELECTROMAGNETIC DOOR HOLD-OPEN DEVICE, FURNISHED BY DIV. 8, INSTALLED & CONNECTED COMPLETE TO FIRE ALARM SYSTEM BY DIV. 28
FS	FIRE ALARM SYSTEM SPRINKLER FLOW SWITCH. PROVIDE MONITOR MODULE
TS	FIRE ALARM SYSTEM SPRINKLER VALVE SUPERVISORY SWITCH. PROVIDE MONITOR MODULE
PIV	POST INDICATING VALVE
B	SPRINKLER FLOW ALARM (PROVIDE BY SPRINKLER CONTRACTOR). CONNECT COMPLETE VIA WATER FLOW SWITCH AUX. CONTACTS
S	FIRE ALARM SYSTEM SMOKE DETECTOR
E S	FIRE ALARM SYSTEM CEILING MOUNTED SMOKE DETECTOR PROGRAMMED FOR AUTOMATIC RECALL OF ELEVATOR
H	FIRE ALARM SYSTEM HEAT DETECTOR
D	FIRE ALARM SYSTEM HVAC DUCT MOUNTED SMOKE DETECTOR. COORDINATE WITH MECHANICAL FOR SUPPLY, INSTALL AND COMPLETE CONNECTION (INCLUDING CONTROL OF HVAC EQUIPMENT) - SEE SPECIFICATIONS
M	FIRE ALARM SYSTEM MONITOR MODULE
C	FIRE ALARM SYSTEM CONTROL MODULE
R	FIRE ALARM SYSTEM RELAY MODULE
CO	FIRE ALARM SYSTEM CEILING MOUNTED CARBON MONOXIDE DETECTOR WITH SOUNDER BASE

SYMBOLS LIST

ALL SWITCH AND CONTROL MOUNTING HEIGHTS OF 48" SHALL BE TO TOP OF THE DEVICE BOX. ALL RECEPTACLES WITH MOUNTING HEIGHT OF UP TO 18" SHALL BE NO LOWER THAN 15" TO BOTTOM OF THE DEVICE BOX, TYPICAL, U.O.N.

Symbol	Description
AA1	INDICATES LUMINAIRE TYPE, SEE LUMINAIRE SCHEDULE
	RECESSED 2'x2', 2'x4' OR 1'x4' LUMINAIRE, FULLY LENSED
	RECESSED 2'x2', 2'x4' LUMINAIRE WITH DECORATIVE ARTICULATED OPTICAL SHIELD
EM OR E	INDICATES EMERGENCY LUMINAIRE. SEE ABBREVIATIONS FOR TYPE OF EMERGENCY SOURCE
	SUSPENDED LINEAR LUMINAIRE
	INDICATES AIRCRAFT CABLE SUPPORT POINT (VERIFY WITH MANUFACTURER)
	INDICATES COMBINATION AIRCRAFT CABLE/ELECTRICAL FEED POINT (VERIFY WITH MANUFACTURER)
	SURFACE CEILING, WALL OR COVE MOUNTED LUMINAIRE
	UNDER CABINET LUMINAIRE
	SURFACE OR SUSPENDED STRIP LUMINAIRE
	SURFACE CEILING MOUNTED LUMINAIRE
	PENDANT MOUNTED LUMINAIRE
	DECORATIVE CEILING MOUNTED LUMINAIRE
	SURFACE MOUNTED LIGHTING TRACK WITH TRACK LUMINAIRES
	RECESSED ADJUSTABLE ACCENT LUMINAIRE. ARROW INDICATES AIMING DIRECTION
	RECESSED DOWNLIGHT LUMINAIRE
	RECESSED WALLWASH LUMINAIRE
	RECESSED OR SURFACE MOUNTED LINEAR WALLWASHER, OPEN AREA INDICATES DIRECTION OF ILLUMINATION
	RECESSED DOWNLIGHT WITH DECORATIVE TRIM
	WALL MOUNTED LUMINAIRE
	STEPLIGHT RECESSED FLUSH IN WALL
	POLE ARM-MOUNTED AREA LUMINAIRE; ARROW INDICATES DIRECTION OF LIGHT DISTRIBUTION WHEN NOT PARALLEL TO ARM ORIENTATION
	POLE ARM-MOUNTED PEDESTRIAN-SCALE WALKWAY OR AREA LUMINAIRE; ARROW INDICATES DIRECTION OF LIGHT DISTRIBUTION
	POST-TOP PEDESTRIAN-SCALE AREA LUMINAIRE; ARROW INDICATES DIRECTION OF LIGHT DISTRIBUTION
	BOLLARD LUMINAIRE; ARROW INDICATES DIRECTION OF LIGHT DISTRIBUTION
	FLUSH IN-GROUND LANDSCAPE OR BUILDING UPLIGHT, NON-ADJUSTABLE AIMING
	FLUSH IN-GROUND LANDSCAPE OR BUILDING UPLIGHT WITH ADJUSTABLE AIMING FEATURE; ARROW INDICATES AIMING DIRECTION
	FLUSH IN-GROUND WALLWASH UPLIGHT; OPEN AREA INDICATES DIRECTION OF ILLUMINATION
	STEM MOUNTED SIGN LIGHT
	WALL MOUNTED EXIT SIGN, ARROWS AS NOTED ON PLANS. SHADED AREA INDICATES NUMBER OF FACES
	CEILING MOUNTED EXIT SIGN, ARROWS AS NOTED ON PLANS. SHADED AREA INDICATES NUMBER OF FACES
	LOW LEVEL WALL MOUNTED EXIT SIGN
	WALL MOUNTED EMERGENCY BATTERY EGRESS LUMINAIRE WITH NUMBER OF ADJUSTABLE LAMP HEADS INDICATED
$a	LINE VOLTAGE SINGLE POLE TOGGLE SWITCH, LETTER ADJACENT INDICATES RESPECTIVE ZONE CONTROLLED, UP 48" U.O.N.
$2	LINE VOLTAGE TWO POLE TOGGLE SWITCH, UP 48" U.O.N.
$3	LINE VOLTAGE THREE-WAY TOGGLE SWITCH, UP 48" U.O.N.
$k	LINE VOLTAGE KEY OPERATED TOGGLE SWITCH
$m	LINE VOLTAGE MOTOR RATED TOGGLE SWITCH INSTALLED AT EQPT SHOWN
$p	LINE VOLTAGE TOGGLE SWITCH WITH PILOT LIGHT, LIGHT IS ON WHEN CIRCUIT IS CLOSED, UP 48" U.O.N.
Sab	LOW VOLTAGE MOMENTARY CONTACT SWITCH - SEE LOW VOLTAGE RELAY SCHEDULE, LOWER CASE LETTER ADJACENT INDICATES RESPECTIVE ZONE CONTROLLED, UP 48" U.O.N.
kSab	LOW VOLTAGE KEYED MOMENTARY CONTACT SWITCH - SEE LOW VOLTAGE RELAY SCHEDULE, LOWER CASE LETTER ADJACENT INDICATES RESPECTIVE ZONE CONTROLLED, UP 48" U.O.N.
aOSb	WALL MOUNTED SWITCH TYPE INFRARED OCCUPANCY SENSOR; UP 48" U.O.N.; SINGLE OR DUAL AS NOTED BY LETTERS ADJACENT. SET TO FIXED 20 MINUTE TIME DELAY AND MAX SENSITIVITY
aDSb	WALL MOUNTED DUAL TECHNOLOGY OCCUPANCY SENSOR; UP 48" U.O.N.; SINGLE OR DUAL AS NOTED BY LETTERS ADJACENT. SET TO FIXED 20 MINUTE TIME DELAY AND MAX SENSITIVITY
OSD	WALL MOUNTED DIGITAL DUAL TECHNOLOGY DIMMING OCCUPANCY SENSOR SWITCH; UP 48" U.O.N.
Sa	WALL MOUNTED DIGITAL SWITCH, UP 48" U.O.N.; LOWER CASE LETTER ADJACENT INDICATES RESPECTIVE ZONE CONTROLLED
2Da,b	WALL MOUNTED SINGLE OR MULTI-ZONE DIGITAL DIMMER SWITCH, UP 48" U.O.N.; LOWER CASE LETTERS ADJACENT INDICATE RESPECTIVE ZONES TO BE SIMULTANEOUSLY MANUALLY CONTROLLED; NUMERAL DESIGNATES NUMBER OF ZONES ASSIGNED TO THE DEVICE
	CEILING MOUNTED DUAL TECHNOLOGY DIGITAL OCCUPANCY SENSOR
	WALL MOUNTED DUAL TECHNOLOGY DIGITAL OCCUPANCY SENSOR
	LOW VOLTAGE COLD TEMPERATURE PIR OCCUPANCY SENSOR
	CEILING MOUNTED LINE VOLTAGE DUAL TECHNOLOGY OCCUPANCY SENSOR
Z3,Z4 P	SINGLE OR MULTI-ZONE SWITCHING OR DIMMING OPEN LOOP DIGITAL DAYLIGHTING SENSOR; NOTATIONS ADJACENT IDENTIFY DAYLIGHT ZONES ASSIGNED TO THE DEVICE. VERIFY EXACT LOCATION PRIOR TO ROUGH-IN
Z1 P	SINGLE ZONE SWITCHING OR DIMMING CLOSED LOOP DIGITAL DAYLIGHTING SENSOR; NOTATIONS ADJACENT IDENTIFY DAYLIGHT ZONES ASSIGNED TO THE DEVICE. VERIFY EXACT LOCATION PRIOR TO ROUGH-IN
Z1 P	DAYLIGHT CONTROL PHOTOCELL - BRACKET MOUNTED; NOTATIONS ADJACENT IDENTIFY DAYLIGHT ZONES ASSIGNED TO THE DEVICE. VERIFY EXACT LOCATION PRIOR TO ROUGH-IN
Z2	INDICATES DAYLIGHT ZONE CONTROLLED VIA PHOTOCELL
RC 2	ROOM CONTROLLER ADJACENT NUMERAL REFERS TO THE NUMBER OF ZONES TO BE CONTROLLED. VENDOR OR CONTRACTOR TO PROVIDE QUANTITY OF ROOM CONTROLLERS REQUIRED FOR THE NUMBER OF CONTROLLED ZONES.
PC	PLUG LOAD ROOM CONTROLLER
NB	NETWORK BRIDGE
MBR	MASTER WIRELESS BORDER ROUTER & NB - SWITCH IN NETWORK CABINET; SEE DETAILS FOR TYPE
BR 1	SECONDARY WIRELESS BORDER ROUTER
IR	ISOLATED RELAY INTERFACE
EC	EMERGENCY LIGHTING CONTROL MODULE
P	OCCUPANCY SENSOR POWER PACK MOUNTED IN CONCEALED ACCESSIBLE LOCATION
	SEISMIC BRACING FOR PENDANT LUMINAIRE

CALIFORNIA GREEN BUILDING STANDARDS COMPLIANCE

ALL EXTERIOR LUMINAIRES SPECIFIED IN THESE CONTRACT DOCUMENTS COMPLY WITH THE REQUIREMENTS OF THE CALIFORNIA ENERGY CODE AND THE CALIFORNIA GREEN BUILDING STANDARDS CODE, SECTION A5.106.8 LIGHT POLLUTION REDUCTION. EXTERIOR LUMINAIRES COMPLY WITH BACKLIGHT, UPLIGHT, AND GLARE (BUG) RATINGS AS DEFINED IN IESNA TM-15-11 AND BUG RATINGS DO NOT EXCEED THE MAXIMUM ALLOWABLE RATINGS FOR THIS PROJECT.

GENERAL NOTES

1. PRIOR TO BID THE CONTRACTOR SHALL VISIT THE SITE TO ADEQUATELY DETERMINE ALL PRE-EXISTING CONDITIONS. BY THE ACT OF SUBMITTING A BID, THE CONTRACTOR WILL BE DEEMED TO HAVE COMPLIED WITH THE FOREGOING, TO HAVE ACCEPTED SUCH CONDITIONS, AND TO HAVE MADE ALLOWANCES THEREFORE IN PREPARING THE BID.
2. PROVIDE PARITY SIZED GREEN GROUND WIRE IN ALL POWER CONDUITS, BRANCH CIRCUITS (LIGHTING & POWER) AND HOMERUNS. PROVIDE ADDITIONAL ISOLATED GROUND, GREEN WITH YELLOW STRIPE, TO ALL ISOLATED GROUND RECEPTACLES.
3. PROVIDE PULLROPE IN ALL EMPTY CONDUITS THROUGHOUT THE PROJECT.
4. REFER TO ARCHITECTURAL PLANS AND ELEVATIONS FOR EXACT LOCATION & CONNECTION REQUIREMENTS OF ALL LUMINAIRE(S) AND ALL OUTLET, SWITCH, AND ELECTRICAL RELATED DEVICE MOUNTING HEIGHTS AND LOCATIONS. COORDINATE LOCATIONS OF ALL LUMINAIRE(S) AND JUNCTION BOXES WITH MECHANICAL DIVISION PRIOR TO ROUGH-IN. COORDINATE LOCATIONS OF ELECTRICAL DEVICES WITH FURNITURE PLANS PRIOR TO ROUGH-IN.
5. REFER TO MECHANICAL PLANS FOR EXACT LOCATION(S) OF ALL MECHANICAL EQUIPMENT, AND CONFIRM EXACT CONNECTION REQUIREMENTS OF ALL MECHANICAL EQUIPMENT WITH MECHANICAL DIVISION, PRIOR TO ROUGH-IN. VERIFY EXACT REQUIREMENTS FOR VOLTAGE, PHASE, HORSE-POWER, OR KVA RATINGS, OF ALL MECHANICAL DIVISION EQUIPMENT REQUIRING ELECTRICAL CONNECTION.
6. VERIFY EXACT CONNECTION REQUIREMENTS, OUTLET TYPE(S), MOUNTING HEIGHT(S) AND LOCATION(S) OF ALL OWNER-SUPPLIED EQUIPMENT, AND ALL EQUIPMENT PROVIDED UNDER OTHER SECTIONS OF THE SPECIFICATIONS, PRIOR TO ROUGH-IN. REFER TO ARCHITECTURAL DRAWINGS FOR EQUIPMENT LOCATIONS.
7. COORDINATE TRENCHING WITH OWNER AND OTHER TRADES BEFORE BEGINNING WORK.
8. ALL CONDUIT PENETRATIONS THROUGH FIRE-RATED WALLS AND FLOORS SHALL BE SEALED AND EQUIPPED WITH U.L. LISTED FIRE PENETRATION ASSEMBLIES TO MAINTAIN FIRE SEPARATION RATING.
9. DO NOT INSTALL ANY OUTLETS BACK TO BACK IN STUD WALLS OR DE-MOUNTABLE PARTITIONS.
10. THE CONTRACTOR SHALL VERIFY ALL CEILING TYPES BEFORE ORDERING OF LUMINAIRE(S). ALSO VERIFY THAT ALL FEATURES CALLED FOR IN LUMINAIRE DESCRIPTIONS ON THE LUMINAIRE SCHEDULE ARE INCLUDED WITH CATALOG NUMBERS LISTED ON THE LUMINAIRE SCHEDULE WHEN LUMINAIRE ORDERS ARE PLACED, AND ARE INCLUDED AS PART OF THE LIGHTING SUBMITTALS FOR THIS PROJECT. IF A DISCREPANCY EXISTS, CONTACT THE ARCHITECT AND ELECTRICAL ENGINEER FOR CLARIFICATION PRIOR TO BID.
11. CIRCUITRY AND CONDUIT ROUTING SHOWN ON THE PLANS IS DIAGRAMMATIC ONLY. THIS CONTRACTOR IS RESPONSIBLE FOR BECOMING COMPLETELY FAMILIAR WITH THE ARCHITECTURAL AND STRUCTURAL CONDITIONS AND LIMITATIONS IN THE BUILDING AND TO PROVIDE ALL LABOR, TOOLS AND MATERIALS REQUIRED TO PRODUCE A COMPLETELY CONCEALED INSTALLATION WHEREVER INDICATED ON THE PLANS.
12. MAINTAIN "AS-BUILT" RECORDS AT ALL TIMES, SHOWING EXACT LOCATION OF ALL UNDERGROUND AND/OR CONCEALED CONDUITS AND SERVICES INSTALLED UNDER THIS CONTRACT, INCLUDING CIRCUIT IDENTIFICATION WHERE APPLICABLE. PROVIDE OWNER WITH "AS-BUILT" DOCUMENTS AS INDICATED IN THE SPECIFICATIONS, AND/OR CALLED FOR IN THE SPECIFICATIONS.
13. DRAWINGS INDICATE THE LOCATION(S) OF DEVICES, LUMINAIRE(S) AND EQUIPMENT, AND THE CIRCUIT NUMBER AND PANEL DESIGNATED TO SUPPLY THEM. THE CONTRACTOR SHALL BE RESPONSIBLE FOR COMPLETELY CONNECTING ALL ELECTRICAL DEVICES TO CIRCUITS INDICATED ON THE DRAWINGS.
14. UNLESS OTHERWISE NOTED, ALL WORK SHOWN ON DRAWINGS IS NEW AND TO BE PROVIDED AND INSTALLED COMPLETE UNDER THIS CONTRACT.
15. ALL EQUIPMENT GROUNDING SHALL CONFORM TO ARTICLE 250 OF THE NATIONAL ELECTRICAL CODE, LATEST EDITION.
16. ALL EXTERIOR CONDUIT ABOVE GRADE, INCLUDING ALL ROOF MOUNTED CONDUIT, SHALL BE GALVANIZED RIGID STEEL. COAT ALL EXPOSED THREADS WITH GALVANIZING PAINT. PAINT ALL SURFACE MOUNTED RACEWAYS AND PULLBOXES TO MATCH SURROUNDING CONDITIONS, AS DIRECTED BY THE ARCHITECT.
17. ALL ELECTRICAL WORK SHALL BE CARRIED OUT IN ACCORDANCE WITH THE LATEST EDITION OF THE N.E.C., AS WELL AS STATE, AND LOCAL CODES AND REQUIREMENTS.
18. ALL CONDUIT SHALL BE CONCEALED, UNLESS OTHERWISE NOTED.
19. THE CONTRACTOR SHALL BE RESPONSIBLE TO VERIFY THE AVAILABLE SHORT CIRCUIT CURRENT AT THE MAIN SWITCHBOARD INCOMING TERMINALS WITH THE UTILITY COMPANY, AND TO VERIFY THAT ALL POWER AND SIGNAL SERVICE PROVISIONS, INCLUDING CONCRETE EQUIPMENT PADS, CONDUITS, PULLBOXES AND CLEARANCES, MEET THE UTILITY COMPANY'S REQUIREMENTS, PRIOR TO INSTALLATION.
20. EQUIPMENT OVERLOADS AND FUSES SHALL BE PROVIDED AND INSTALLED AS PER NAME PLATE ON THE EQUIPMENT ACTUALLY PROVIDED.
21. THE CONTRACTOR SHALL PAY FOR ALL REQUIRED PERMITS AND INSPECTION FEES.
22. THE CONTRACTOR SHALL VERIFY ALL CRITICAL DIMENSIONS WITH THE ARCHITECTURAL DRAWINGS PRIOR TO ROUGH-IN.
23. ALL EXIT SIGNS SHALL COMPLY WITH THE RELEVANT PORTIONS OF SECTIONS 1008 AND 1013 OF THE CBC.
24. ALL MECHANICAL DIVISION EQUIPMENT LOW VOLTAGE CONTROL WIRING AND RACEWAY SHALL BE PROVIDED AND INSTALLED AS SPECIFIED IN MECHANICAL DIVISION U.O.N.
25. COORDINATE INSTALLATION OF ALL RECESSED LUMINAIRE(S) WITH MECHANICAL DIVISION PRIOR TO INSTALLATION OF HVAC DUCTS AND SPRINKLER HEADS. ENSURE AFTER INSTALLATION OF LUMINAIRE(S) THAT THERE IS NO CONTACT BETWEEN DUCTS AND LUMINAIRE(S) TO AVOID VIBRATION IN LUMINAIRE(S).
26. USE FLEXIBLE CONDUIT FOR ALL MOTOR, TRANSFORMER, RECESSED LUMINAIRE CONNECTIONS, AND CONNECTIONS BETWEEN TWO SEPARATE STRUCTURES AND FOR ALL FINAL CONNECTIONS TO "CRITICAL EQUIPMENT" AS DEFINED IN SPECIFICATIONS. MINIMUM 1/2" DIAMETER, LIQUID TIGHT TYPE USED OUTDOORS AND IN ALL WET LOCATIONS; PROVIDE WITH CODE-SIZE (MINIMUM #12) BARE GROUND WIRE IN ALL FLEXIBLE CONDUIT.
27. PROVIDE A DEDICATED NEUTRAL CONDUCTOR FOR ALL BRANCH CIRCUITS FEEDING OUTLETS AS NOTED ON THE DRAWINGS.
28. FOR FLUSH MOUNTED PANELBOARDS THE CONTRACTOR SHALL STUB A MINIMUM OF FOUR (4) 3/4" CONDUITS FROM THE PANEL UP INTO THE ACCESSIBLE CEILING ABOVE FOR FUTURE CIRCUITS.
29. ALL CONDUIT CONNECTORS TO OUTLET OR JUNCTION BOXES SHALL HAVE INSULATED THROATS (MANUFACTURED AS AN INTEGRAL PART OF THE CONNECTOR). AFTER-MARKET INSERTABLE THROATS ARE NOT ACCEPTABLE.
30. ALL CIRCUITS IN ALL JUNCTION BOXES AND DEVICES SHALL BE CLEARLY IDENTIFIED BY MEANS OF "EZ" NUMBERING TAGS OR EQUIVALENT, TO IDENTIFY THE CIRCUIT NUMBER OR RELAY SUPPLYING THE CONDUCTOR. ALL JUNCTION BOXES SHALL BE LABELED PER SPECIFICATIONS.
31. ALL SURFACE MOUNTED POWER AND SIGNAL BOXES IN FINISHED AREAS SHALL BE "WIREMOLD" TYPE, WITH MATCHING RACEWAYS. SURFACE MOUNTED STEEL JUNCTION BOXES AND/OR EMT ARE NOT ACCEPTABLE.
32. ALL LOCATIONS OF BARE METAL SURFACE MOUNTED CONDUIT, BOXES, PANEL COVERS, AND RELATED FITTINGS OR ACCESSORIES INSTALLED IN FINISHED AREAS (BOTH INTERIOR AND EXTERIOR) SHALL BE FINISH PAINTED TO MATCH THE SURFACE TO WHICH THEY ARE MOUNTED TO (AFTER INSTALLATION). PAINTING SHALL INCLUDE DIFFERENT COLORS AS REQUIRED TO MATCH EXISTING STRIPING OR OTHER BUILDING FEATURES TO WHICH THE EQUIPMENT IS ATTACHED AND VISIBLE. VERIFY EXACT JUNCTION BOX LOCATION(S) AND ROUTING OF EXPOSED RACEWAYS WITH THE ARCHITECT PRIOR TO ROUGH-IN.
33. PROVIDE A BLANK COVER PLATE (COLOR TO MATCH ADJACENT DEVICES OR AS SPECIFICALLY CALLED FOR IN SPECIFICATIONS) FOR ALL JUNCTION BOXES (NEW AND EXISTING) ON THE PROJECT WHEN NO DEVICE IS INSTALLED.
34. FOR OUTDOOR 15 AND 20-AMPERE, 125 AND 250-VOLT RECEPTACLES: RECEPTACLES LOCATED IN "WET" LOCATIONS SHALL HAVE "IN-USE" TYPE WEATHERPROOF COVER PLATES PROVIDED AND INSTALLED; RECEPTACLES LOCATED IN "DAMP" LOCATIONS SHALL HAVE "IN-USE" TYPE WEATHERPROOF COVER PLATES IN LOCATIONS DEEMED TO BE "IN-USE" WITH CORD AND PLUG ATTACHED.
35. TWO OR THREE DIFFERENT PHASES SUPPLIED BY A 3-PHASE PANEL MAY SHARE A SINGLE NEUTRAL ONLY IF CIRCUIT POSITIONS ARE ADJACENT IN THE PANEL. PROVIDE COMMON HANDLE-TIE ON BREAKERS FOR MULTI-WIRE BRANCH CIRCUITS, WITH COMMON NEUTRAL, PER NEC REQUIREMENTS.

LIST OF DRAWINGS

E-0.1 SYMBOLS LIST, GENERAL NOTES & LIST OF DRAWINGS
E-0.2 LUMINAIRE SCHEDULE

E-1.1 SITE PLAN - ELECTRICAL

E-M2.1 FLOOR PLAN - LIGHTING

E-M3.1 FLOOR PLAN - POWER & SIGNAL
E-M3.2 ROOF PLAN - ELECTRICAL

E-5.1 SINGLE LINE DIAGRAM - POWER
E-5.2 SINGLE LINE DIAGRAMS - SIGNAL

E-6.1 PANEL SCHEDULES

E-7.1 DETAILS
E-7.2 DETAILS

E-8.1 TITLE 24 COMPLIANCE DOCUMENTS
E-8.2 TITLE 24 COMPLIANCE DOCUMENTS

FE-0.1 FIRE ALARM EQUIPMENT LIST & NOTES

FE-M3.1 FLOOR PLAN - FIRE ALARM

FE-5.1 FIRE ALARM RISER DIAGRAM

QUATTROCCHI KWOK ARCHITECTS
Main Office:
636 Fifth Street, Santa Rosa, CA 95404
East Bay:
55 Harrison Street, Suite 525
Oakland, CA 94607
(707) 576-0829

O'MAHONY & MYER
ELECTRICAL ENGINEERING and LIGHTING DESIGN
4340 REDWOOD HWY, SUITE 245
SAN RAFAEL, CALIFORNIA 94903
(415) 492-0420/FAX (415) 479-9662
www.ommconsulting.com

REGISTERED PROFESSIONAL ENGINEER
PIETER J. COLENBRANDER
No.14738
Exp. 6/21
ELECTRICAL
STATE OF CALIFORNIA

FREEDOM HIGH SCHOOL

NEW AUXILIARY GYMNASIUM

1050 NEROLY RD,
OAKLEY, CA 94561

LIBERTY UNION HIGH SCHOOL DISTRICT

REVISIONS

DSA APP NO. 01-119278

ARCH PROJECT NO: 1869.00
DRAWN BY: LN,TV,JW,OOM
DRAWING SCALE: AS NOTED
PTN: 61721-78 FILE NO: 7-H4

BID DOCUMENT

APRIL 27, 2021

SHEET TITLE

SYMBOLS LIST, GENERAL NOTES & LIST OF DRAWINGS

SHEET NUMBER

E-0.1

FREEDOM HS AUX GYMNASIUM - 220066

LUMINAIRE SCHEDULE

TYPE	MOUNTING	DESCRIPTION	MANUFACTURER CATALOG #	LIGHT SOURCE	POWER SUPPLY	VOLTS	INPUT WATTS	REMARKS
BC1	SURFACE WALL MOUNTED	DECORATIVE EXTERIOR DOWNLIGHT WALL SCONCE SIMILAR TO TYPE BA1 ABOVE, BUT WITH LARGER HOUSING, HIGHER OUTPUT, IES TYPE II DISTRIBUTION PATTERN WITH FULL CUTOFF, INTEGRAL ELECTRONIC DRIVER, PREMIUM FINISH AS SELECTED BY THE ARCHITECT, UL WET LOCATION.	AAL #CY2-45-3K8-1-2-120-(FINISH)-T-FPP	LED 3000K 80+ CRI 4100LM	INTEGRAL ELECTRONIC LED DRIVER	UNIV.	50	1) VERIFY MOUNTING HEIGHT WITH THE ARCHITECT, PRIOR TO ROUGH-IN. 2) COORDINATE PROVISION OF BLOCKING IN WALL TO PREVENT 'SAGGING' AFTER INSTALLATION.
BC2	SURFCE WALL MOUNTED	SAME AS BC1, EXCEPT REDUCED OUTPUT, 'DIFFUSED' TYPE III DISTRIBUTION PATTERN.	AAL #CY2-25-3K8-1-3D-120-(FINISH)-T-FPP	LED 3000K 80+ CRI 4100LM	INTEGRAL ELECTRONIC LED DRIVER	UNIV.	25	ALL REMARKS LISTED ABOVE FOR TYPE 'BC1' APPLY TO TYPE 'BC2' LUMINAIRES.
BC3	SURFACE WALL MOUNTED	SAME AS BC1, EXCEPT REDUCED OUTPUT, TYPE III DISTRIBUTION PATTERN.	AAL #CY2-25-3K8-1-2-120-(FINISH)-T-FPP	LED 3000K 80+ CRI 4100LM	INTEGRAL ELECTRONIC LED DRIVER	UNIV.	25	ALL REMARKS LISTED ABOVE FOR TYPE 'BC1' APPLY TO TYPE 'BC3' LUMINAIRES.
EX1	SURFACE WALL	SINGLE-FACE EDGELIT LED EXIT SIGN FIXTURE, WITH GREEN STENCIL LETTERS, DIECAST ALUMINUM HOUSING, UNIVERSAL CANOPY FOR BACK/END OR TOP MOUNTING, ARROWS AS INDICATED ON THE PLANS. FINISH TO BE DETERMINED BY THE ARCHITECT. WEIGHT	EVENLIGHT #RZR3-AC-G-1-BA-1B-RS*	GREEN LED	INTEGRAL ELECTRONIC LED POWER SUPPLY	UNIV.	2	

LUMINAIRE SCHEDULE

TYPE	MOUNTING	DESCRIPTION	MANUFACTURER CATALOG #	LIGHT SOURCE	POWER SUPPLY	VOLTS	INPUT WATTS	REMARKS
AA1	PENDANT SUSPENDED	PENDANT MOUNTED LED HIGH BAY LUMINAIRE, WITH NOM. 20" DIA x 5"H BOROSCILLICATE GLASS, MEDIUM-SPREAD, PRISMATIC REFRACTOR / REFLECTOR, DIECAST ALUMINUM DRIVER HOUSING W/STANDARD FINISH AS SELECTED BY THE ARCHITECT, CUSTOM-LENGTH, 5-WIRE, POWER/CONTROL S.O. TYPE FEED CORD., CONTRACTOR-PROVIDED BRAIDED S.S. AIRCRAFT SAFETY CABLE, IN LIEU OF FACTORY-STANDARD SAFETY CHAIN, ANTI-ROTATIONAL SAFETY HOOK, WIREGUARD, INTEGRAL ELECTRONIC DIMMING DRIVER, STANDARD FINISH AS SELECTED BY THE ARCHITECT, WIRE GUARD OPTION; SEISMIC BRACING PROVIDED AT UNITS NOT FREE TO SWAY 45 DEG. IN ALL DIRECTIONS WITHOUT OBSTRUCTION (INCLUDING ADJACENT SWAYING UNITS); CONTRACTOR-SUPPLIED & INSTALLED R.S.C. STEM, OUTLET BOX, & MISC. HARDWARE SHALL BE FIELD PAINTED AS DIRECTED BY THE ARCHITECT.	ACUITY BRANDS / HOLOPHANE: #PHG-15L-35K80CRI-AS-(FINISH)-MGG-PF 129-CW5/6-WG- C6* *HARDWARE ONLY, FOR CONTACTOR-SUPPLIED S.S. BRAIDED AIRCRAFT SAFETY CABLE	LED 3500K 80 CRI 13,416 LM	INTEGRAL ELECTRONIC LED DIMMING DRIVER 0-10V, 100%-10%	UNIV.	113	1) SEE DETAIL ON SHEET E-7.2 FOR MOUNTING. 2) SEISMIC BRACING INDICATED TO BE PROVIDED AT UNITS NOT FREE TO SWAY 45 DEG. IN ALL DIRECTIONS WITHOUT OBSTRUCTION. 3) CONTRACTOR-PROVIDED, FIELD CUT & THREADED R.S.C. STEM, OUTLET BOX, & MISC. MOUNTING / BRACING HARDWARE SHALL BE FIELD PAINTED AS DIRECTED BY THE ARCHITECT. 4) FIELD-VERIFY POWER & CONTROL DROP CORD LENGTHS REQUIRED FOR EACH LUMINAIRE, PRIOR TO RELASE OF ORDER 5) PROVIDE ALL 'AA'-SERIES LUMINAIRE WITH FACTORY FITTINGS AS REQUIRED TO ALLOW PROPER INSTALLATION OF CONTRACTOR-SUPPLIED S.S. AIRCRAFT SAFETY CABLE.
AA2	PENDANT SUSPENDED	SAME AS 'AA1', EXCEPT NARROW BEAM PATTERN GLASS REFLECTOR & REFRACTOR OPTICS,	ACUITY BRANDS / HOLOPHANE: #PHG 15L-35K80CRI-AS-(FINISH)-NGG-PF129-CW5/6-WG- C6* *HARDWARE ONLY, FOR CONTACTOR-SUPPLIED S.S. BRAIDED AIRCRAFT SAFETY CABLE	LED 3500K 80 CRI 13,416 LM	INTEGRAL ELECTRONIC LED DIMMING DRIVER 0-10V, 100%-10%	UNIV.	113	ALL REMARKS LISTED ABOVE FOR TYPE 'AA1' APPLY TO TYPE 'AA2' LUMINAIRES.
AA3	PENDANT SUSPENDED	SAME AS 'AA1', EXCEPT REDUCED OUTPUT AND WATTAGE,	ACUITY BRANDS / HOLOPHANE: #PHG 9L-35K80CRI-AS-(FINISH)-MGG-PF129-CW5/6-WG- C6* *HARDWARE ONLY, FOR CONTACTOR-SUPPLIED S.S. BRAIDED AIRCRAFT SAFETY CABLE	LED 3500K 80 CRI 8,590 LM	INTEGRAL ELECTRONIC LED DIMMING DRIVER 0-10V, 100%-10%	UNIV.	71	ALL REMARKS LISTED ABOVE FOR TYPE 'AA1' APPLY TO TYPE 'AA3' LUMINAIRES.
AB1	S.S. AIRCRAFT CABLE SUSPENDED	SUSPENDED LINEAR LED DIRECT/INDIRECT LUMINAIRE ASSEMBLY, WITH NOM. 2"W x 4"H x 32'L EXTRUDED ALUMINUM HOUSING, 'BOOSTED' DOWN / 'HIGH UP OUTPUTS, STANDARD FLAT ACRYLIC DOWNLIGHT DIFFUSTER, WIDE-SPREAD UPLIGHT OPTICS, INTEGRAL ELECTRONIC DIMMING DRIVERS, 2-CIRCUIT CONFIGURATION - WITH SEPARATE HOT/NEUTRAL & CONTROL CONDUCTOR(S) DROP CORD PROVIDED FOR ALL DOWNLIGHT DIODES IN (1) 4FT LONG END SECTION; ALL REMAINING UP & DOWN DIODES CONNECTED TO SECOND (SEP. NEUTRAL) CIRCUIT FEED DROP CORD; STANDARD FINISH AS SELECTED BY THE ARCHITECT.	FINELITE #HP2P-P-ID-32'-H/B-835-WSO-BG-96LG-(VOLTAGE)-DC-FC/10%-FA50-C1(VERIFY)-SW-EM/GEN	LED 3500K 90+ CRI 1207LM/FT	0-10V, 100%-10% DIMMING	UNIV.	11.5W/LF	
AB2	S.S. AIRCRAFT CABLE SUSPENDED	SAME AS 'AB1', EXCEPT MULTI-CIRCUIT CONTROL PROVISIONS: (3) NORMAL POWER CONTROL GROUPS: (2) - AUTO-DAYLIGHT DIMMED UP & DOWN SECTIONS AS SHOWN, (1) FOR MANUAL DIMMED UPLIGHT ONLY @ 4FT EMERGENCY SECTION INDICATED), AND: (1) - EMERGENCY INVERTER POWERED 4FT DOWNLIGHT DIODE SECTION INDICATED, NORMALLY MANUALLY DIMMED WITH ALL OTHER SECTIONS / AUTO 'FULL-ON' UPON FAILURE OF UTILITY POWERVIA UL924 CONTROL MODULE. SEE PLANS FOR EXACT CONFIGURATION OF CONTROL ZONES REQUIRED4.	FINELITE #HP2P-P-ID-32'-H/B-835-WSO-BG-96LG-(VOLTAGE)-MC/4-FC/10%-FA50-C1(VERIFY)-SW-EM/GEN	LED 3500K 90+ CRI 1207LM/FT	0-10V, 100%-10% DIMMING	UNIV.	11.5W/FT	1) VERIFY MOUNTING HEIGHT WITH THE ARCHITECT, PRIOR TO ROUGH-IN. 2) COORDINATE PROVISION OF BLOCKING IN WALL TO PREVENT 'SAGGING' AFTER INSTALLATION.
AC1	SURFACE WALL MOUNTED OVER MIRRORS	8'L x 3"H x 3" D LINEAR LED OVER-MIRROR UNIT, WITH EXTRUDED ALUMINUM HOUSING, DECORATIVE ENDCAPS, INTEGRAL ELECTRONIC DIMMING DRIVER, DECORATIVE JUNCTION BOX COVERPLATE, RAL FINISH AS SELECTED BY THE ARCHITECT.	PRIMUS #ALX1-RLR-LED-H-35-SM/JBP-AEB-C-8'	LED 3500K 85 CRI 1220LM/FT	0-10V, 100%-10% DIMMING	UNIV.	11.5W/LF	
AD1	SURFACE MOUNTED	2" H x 2 3/4" W x 8' L LED 'STRIPLIGHT', WITH 22 GAUGE DIE FORMED C.R.S. HOUSING W/ WHITE POLYESTER POWDER COAT 'PAINTED AFTER FABRICATION' FINISH, ROUNDED HIGH STRENGTH DR ACRYLIC 'WRAP-AROUND' DIFFUSER, INTEGRAL NON-DIMMING ELECTRONIC DRIVER,	WILLIAMS #75R-8-L130-835-WG-75-RA-75	LED 3500K 80+ CRI 13000LM	INTEGRAL ELECTRONIC LED DIMMING DRIVER 0-10V, 100%-10%	120	88	
AD2	SURFACE MOUNTED	SAME AS AD1, EXCEPT 4' L, MOUNTED IN CONTINUOUS ROW WITH 4' AD1 UNIT.	WILLIAMS #75R-4-L65-835-WG-75-RA-75	LED 3500K 80+ CRI 6500 LM	INTEGRAL ELECTRONIC LED DIMMING DRIVER 0-10V, 100%-10%	120	42	
AF1	SURFACE MOUNTED	DECORATIVE CEILING MOUNTED LED 'DRUM' DOWNLIGHT, WITH PRESSED WHITE GLASS DIFFUSER. DIE-CAST ALUMINUM HOUSING AND TRIM. PAINTED GR-94 METALLIC HOUSING AND TRIM. 15.82" DIAMETER 3.62" DEEP. FINISH: STANDARD TEXTURED WHITE.	PERFORMANCE in LIGHTING #71434	LED 3500K 80+ CRI 2740LM	INTEGRAL ELECTRONIC LED DIMMING DRIVER 0-10V, 100%-10%	120	40	
AG1	RECESSED	2' L x 2' W x 2" D RECESSED LED TROFFER DOWNLIGHT UNIT WITH ANGLED EDGELIT ACRYLIC DIFFUSING PANELS, DECORATIVE CENTER JOINER BAND, INTEGRAL ELECTRONINC DIMMING DRIVER.	COLUMBIA #VSY22-35-MLHE-G-ED-U	LED 3500K 80+ CRI 3280LM	INTEGRAL ELECTRONIC LED DIMMING DRIVER 0-10V, 100%-10%	UNIV.	24	
BA1	SURFACE WALL MOUNTED	DECORATIVE EXTERIOR DOWNLIGHT WALL SCONCE WITH FORMED ALUMINUM BODY AND DECORATIVE 'TRIANGULAR WEDGE' SHROUD, IES TYPE III DISTRIBUTION PATTERN WITH FULL CUTOFF, INTEGRAL ELECTRONIC DRIVER, PREMIUM FINISH AS SELECTED BY THE ARCHITECT, UL WET LOCATION LISTED.	AAL #CY1-25-3K8-1-3D-120-(FINISH)-T-FPP	LED 3000K 80+ CRI 2200LM	INTEGRAL ELECTRONIC LED DRIVER	UNIV.	25	1) VERIFY MOUNTING HEIGHT WITH THE ARCHITECT, PRIOR TO ROUGH-IN. 2) COORDINATE PROVISION OF BLOCKING IN WALL TO PREVENT 'SAGGING' AFTER INSTALLATION.
BB1	CEILING RECESSED	RECESSED LED WALL-WASH UNIT WITH FORMED ALUMINUM HOUSING, 6"DIA CLEAR ALZAK ALUMINUM REFLECTOR, ANGLELD PRISMATIC GLASS SPREAD LENS, INTEGRAL ELECTRONIC DIMMING DRIVER, MODIFIED FOR EXTRA THICK EXTERIOR SOFFIT, UL WET LOCATION LISTED.	KIRLIN #LRR-06425-2500L-120-30K-99 (DEEP TRIM FOR THICK SOFFIT)	LED 3000K 80+ CRI 2780LM	INTEGRAL ELECTRONIC LED DIMMING DRIVER 0-10V, 100%-10%	120	35	

QUATTROCCHI KWOK ARCHITECTS
Main Office:
636 Fifth Street, Santa Rosa, CA 95404
East Bay:
55 Harrison Street, Suite 525
Oakland, CA 94607
(707) 576-0829

O'MAHONY & MYER
ELECTRICAL ENGINEERS and LIGHTING DESIGN
4340 REDWOOD HWY., SUITE 245
SAN RAFAEL, CALIFORNIA 94903
(415) 492-0420/FAX (415) 479-0662
www.ommconsulting.com

REGISTERED PROFESSIONAL ENGINEER
COLEMAN
P.E. No.14738
Exp. 6/21
ELECTRICAL
STATE OF CALIFORNIA

FREEDOM HIGH SCHOOL

NEW AUXILIARY GYMNASIUM

1050 NEROLY RD,
OAKLEY, CA 94561

LIBERTY UNION HIGH SCHOOL DISTRICT

REVISIONS

DSA APP NO. 01-119278

ARCH PROJECT NO: 1869.00
DRAWN BY: LN,TV,JW,DM
DRAWING SCALE: AS NOTED
PTN: 61721-78 FILE NO: 7-H4

BID DOCUMENT

APRIL 27, 2021

SHEET TITLE

LUMINAIRE SCHEDULE

SHEET NUMBER

E-0.2

FREEDOM HS AUX GYMNASIUM - 220066

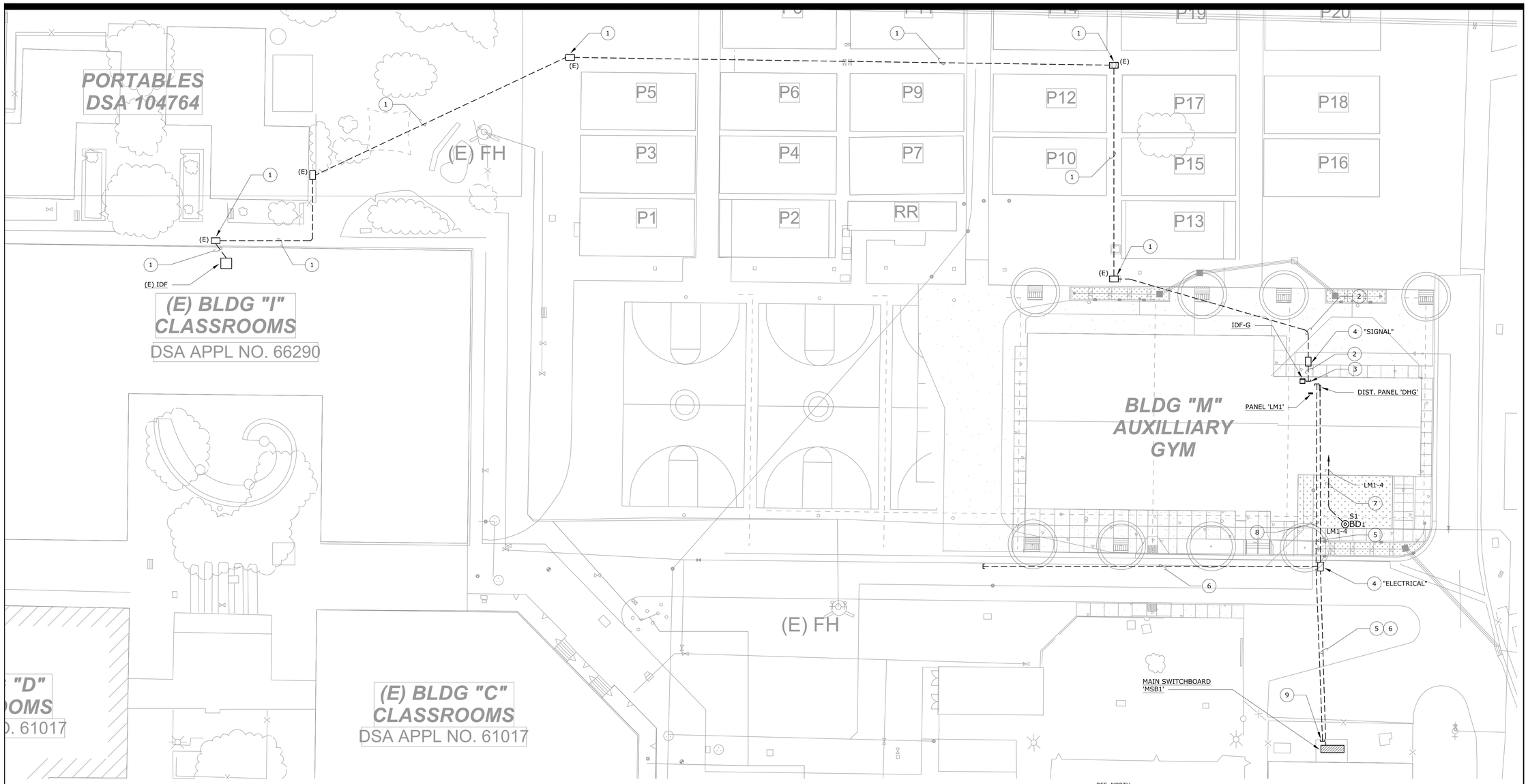

SITE PLAN - ELECTRICAL

SCALE: 1" = 20'-0"

1 / E-1.1

NUMBERED SHEET NOTES

7. ROUTE ALL EXTERIOR LIGHTING CIRCUITS HOME VIA BMS-CONTROLLED RELAY CONTRACTS LOCATED IN ELECTRIC ROOM. RELAY CONTRACTS AND BYPASS SWITCHES TO BE PROVIDED BY DIVISION 23. TYPICAL ALL EXTERIOR BUILDING-MOUNTED AND POLE-MOUNTED LUMINAIRES. SEE DETAIL 5/E-5.3.

8. PROVIDE AND INSTALL 2" UNDERGROUND SCHEDULE 40 PVC RACEWAY ONLY FOR FUTURE PV SYSTEM CONNECTION TO (E) MSB. STUB UP IN ELEC 109, DIRECTLY UNDER LOCATION RESERVED FOR FUTURE PV SYSTEM DISCONNECT SWITCH. SEE E-3.1.

9. STUB, CAP AND MARK RACEWAY FOR FUTURE PV SYSTEM IN FRONT OF (E) MSB, AT THE END OF THE DISTRIBUTION SECTION THAT IS THE FURTHEST DISTANCE FROM WHERE THE (E) MSB BUS RECEIVES ITS SUPPLY. SEE E-5.1 AND 9/E-7.1.

NUMBERED SHEET NOTES

1. ROUTE (N) SIGNAL CABLING IN AVAILABLE (E) PULLBOXES AND UNDERGROUND RACEWAY. INCLUDE SUFFICIENT LABOR IN BID TO INVESTIGATE THE (E) CONDUIT ROUTE FROM (E) IDF TO (N) AUXILIARY GYM IDF-G. SEE E-5.2 FOR CABLE QUANTITIES AND TYPES.

2. PROVIDE AND INSTALL UNDERGROUND SCHEDULE 40 PVC RACEWAY AS FOLLOWS:
   (1) 4" C. - FIBER OPTIC (TELECOM, CLOCK/SPEAKER) - SEE 2/E-5.2.
   (1) 2" C. - SPARE - STUB CONDUIT AT BACKBOARD.

3. STUB RACEWAY INTO ELEC 109, ADJACENT TO IDF-G.

4. PROVIDE AND INSTALL FLUSH, IN-GRADE PULLBOX, CHRISTY (OR EQUAL), WITH COVER LABLED AS NOTED ON PLAN. PULLBOX SHALL BE "TRAFFIC RATED" REINRFORCED CONCRETE WITH STEEL FRAME AND STEEL COVER. SIZE PULLBOX PER NEC. SEE 2/E-7.2.

5. PROVIDE AND INSTALL UNDERGROUND SCHEDULE 40 PVC RACEWAY. SEE E-5.1 FOR CONDUIT AND CONDUCTOR SIZES.

6. PROVIDE AND INSTALL (2) 4" UNDERGROUND SCHEDULE 40 PVC RACEWAY TO SERVE FUTURE CONSTRUCTION. STUB OUT, CAP AND MARK AS SHOWN. SEE 9/E-7.1.

QUATTROCCHI KWOK ARCHITECTS
Main Office:
636 Fifth Street, Santa Rosa, CA 95404
East Bay:
55 Harrison Street, Suite 525
Oakland, CA 94607
(707) 576-0829

O'MAHONY & MYER
ELECTRICAL ENGINEERS and LIGHTING DESIGN
4340 REDWOOD HWY., SUITE 245
SAN RAFAEL, CALIFORNIA 94903
(415) 492-0420/FAX (415) 479-0662
www.ommconsulting.com

REGISTERED PROFESSIONAL ENGINEER
P. COLEMAN BRADY
No.14738
Exp. 6/21
ELECTRICAL
STATE OF CALIFORNIA

FREEDOM HIGH SCHOOL

NEW AUXILIARY GYMNASIUM

1050 NEROLY RD,
OAKLEY, CA 94561

LIBERTY UNION HIGH SCHOOL DISTRICT

REVISIONS

DSA APP NO. 01-119278

ARCH PROJECT NO:	1869.00
DRAWN BY:	LN,TV,JW,OOM
DRAWING SCALE:	AS NOTED
PTN: 61721-78	FILE NO: 7-H4

BID DOCUMENT

APRIL 27, 2021

SHEET TITLE

SITE PLAN - ELECTRICAL

SHEET NUMBER

E-1.1

FREEDOM HS AUX GYMNASIUM – 220066

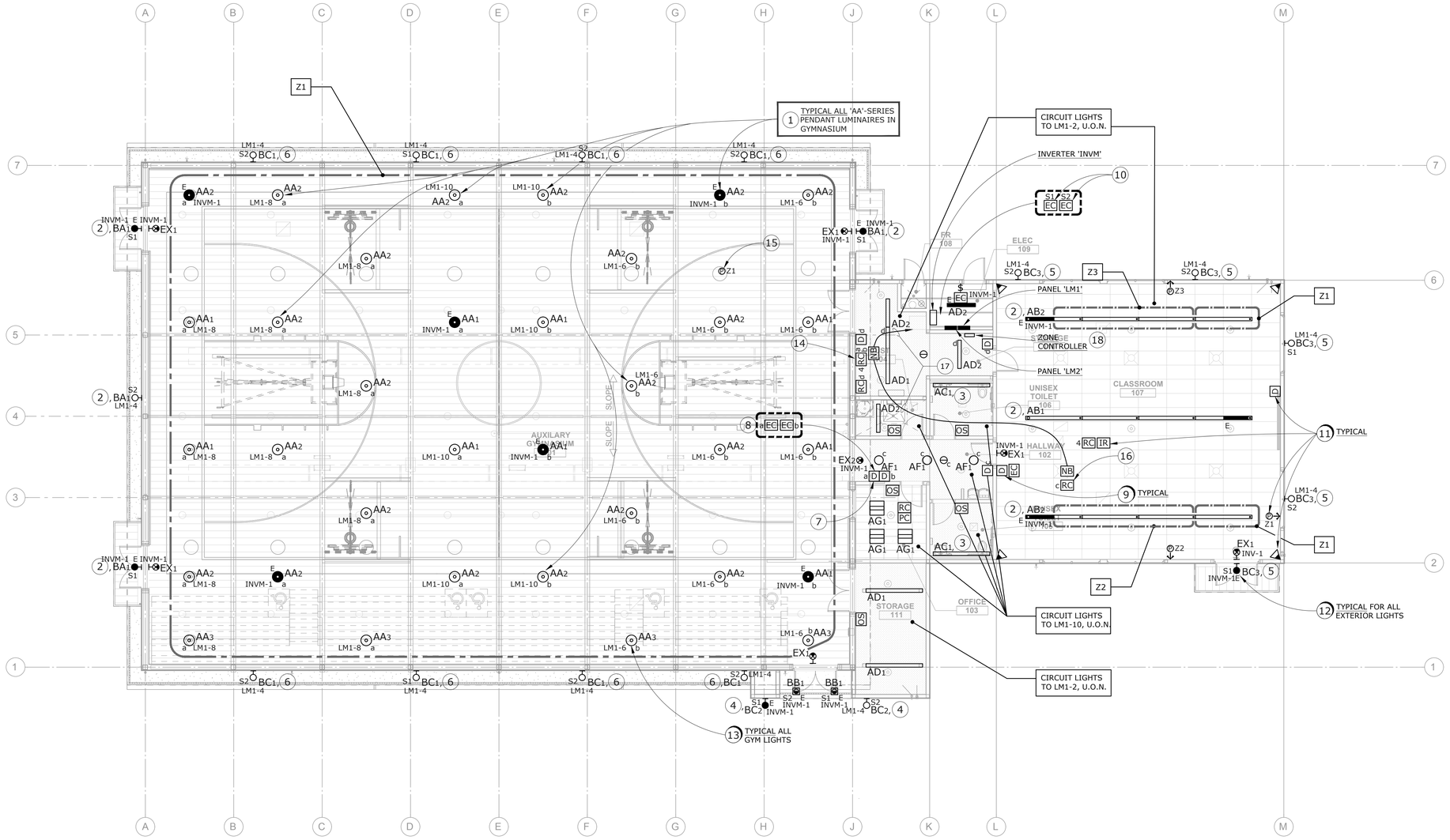

FLOOR PLAN - LIGHTING

SCALE: 1/8" = 1'-0"

1 / E-M2.1

NORTH

NUMBERED SHEET NOTES

1. BOTTOMS OF ALL 'AA' - SERIES SUSPENDED GYM LUMINAIRES TO ALIGN WITH BOTTOM OF LOWER TRUSS CHORDS; VERIFY EXACT STEM LENGTH REQUIRED FOR EACH UNIT AT LOCATIONS INDICATED, AND ORDER FACTORY - SUPPLIED POWER & CONTROL CONDUCTOR LEADS IN LENGTHS AS REQUIRED. SEE MOUNTING DETAIL __/E-7__ .
2. MOUNT ALL EXTERIOR WALL MOUNTED 'BA' - SERIES LUMINAIRES AT +8'-3" A.F.F., TO BOTTOM OF LUMINAIRE.
3. MOUNT ALL 'AC1' UNITS IN RESTROOMS AT +3" ABOVE TOP OF MIRROR TO BOTTOM OF LUMINAIRE, PROVIDE POWER SUPPLY J-BOX W/2-GANG MUD RING, ORIENTED HORIZONTALLY, FOR FACTORY-SUPPLIED DECORATIVE COVERPLATE.
4. MOUNT THESE 'BC2' UNITS AT +7'-6" TO BOTTOM OF LUMINAIRE.
5. MOUNT 'BC3' UNITS AT +14'-8" TO BOTTOM OF LUMINAIRE.
6. MOUNT 'BC1' UNITS AT +24'-6" TO BOTTOM OF LUMINAIRE.
7. MOUNT LIGHTING CONTROLS INSIDE FLUSH CABINET ALONG WITH OTHER GYM CONTROLS AS DESCRIBED IN NOTE 1 ON SHEET E-M3.1.
8. MOUNT EMERGENCY CONTROL MODULE FLUSH IN WALL AT 7'-6" A.F.F., CENTERED ON GYM CONTROLS ENCLOSURE BELOW. PROVIDE AND INSTALL STEEL COVER, SOLID, NO WINDOW, #WB-MRXG AS MANUFACTURED BY FST METALS GROUP, WWW.FSRINC.COM. PROVIDE AND INSTALL ENGRAVED NAMEPLATE OF LAMINATED PLASTIC, "GYM EM LIGHTS TEST", WHITE WITH BLACK LETTERING, SECURED WITH STAINLESS STEEL SCREWS.
9. WATTSTOPPER LMDM-101 U.O.N.
10. LABEL THIS EMERGENCY LIGHTING CONTROL MODULE "EXTERIOR". MOUNT ABOVE ZONE CONTROLLER.
11. PROVIDE AND INSTALL DIMMER SWITCHES, OCCUPANCY SENSORS, PHOTOSENSORS, ROOM CONTROLLERS, PLUG CONTROLLERS AND NETWORK BRIDGES WHERE SHOWN. SEE DETAILS ON SHEET E-5.3. MOUNT ROOM AND PLUG CONTROLLERS ABOVE ACCESSIBLE CEILING WHEREVER POSSIBLE.
12. ROUTE ALL EXTERIOR LIGHTING CIRCUITS HOME VIA BMS-CONTROLLED RELAY CONTRACTS LOCATED IN ELECTRIC ROOM. RELAY CONTRACTS AND BYPASS SWITCHES TO BE PROVIDED BY DIVISION 23. TYPICAL ALL EXTERIOR BUILDING-MOUNTED AND POLE-MOUNTED LUMINAIRES. SEE DETAIL 5/E-5.3.
13. ROUTE ALL GYM LIGHTING CIRCUITS HOME VIA ROOM CONTROLLER LOCATED IN STORAGE RM. 110. TIMECLOCK SCHEDULE CONTROL PROVIDED BY ZONE CONTROLLER IN ELECTRIC ROOM VIA LOW VOLTAGE DATA CONNECTION. SEE DETAIL 2/E-5.3 AND SEQUENCE OF OPERATION ON E-5.3.
14. ROOM CONTROLLERS FOR GYM LIGHTS. MOUNT ROOM CONTROLLERS AND ASSOCIATED DEVICES TO WALL PER DETAIL 4/E-5.3.
15. MOUNT SENSOR TO WALL OF LIGHT WELL USING LMLS-MB2 MOUNTING BRACKET.
16. ROOM CONTROLLER FOR HALLWAY RM. 102.
17. LM-MSTP DATA LINE BETWEEN NETWORK BRIDGES AND ZONE CONTROLLER. SEE DETAIL 2/E-5.3.
18. WATTSTOPPER LMZC-301 ZONE CONTROLLER FOR SCHEDULING GYM LIGHTS.

QUATTROCCHI KWOK ARCHITECTS
Main Office:
636 Fifth Street, Santa Rosa, CA 95404
East Bay:
55 Harrison Street, Suite 525
Oakland, CA 94607
(707) 576-0829

O'MAHONY & MYER
ELECTRICAL ENGINEERS and LIGHTING DESIGN
4340 REDWOOD HWY., SUITE 245
SAN RAFAEL, CALIFORNIA 94903
(415) 492-0420/FAX (415) 479-0662
www.ommconsulting.com

REGISTERED PROFESSIONAL ENGINEER
P. COLEMAN
No.14738
Exp. 6/21
ELECTRICAL
STATE OF CALIFORNIA

FREEDOM HIGH SCHOOL

NEW AUXILIARY GYMNASIUM

1050 NEROLY RD,
OAKLEY, CA 94561

LIBERTY UNION HIGH SCHOOL DISTRICT

REVISIONS

DSA APP NO. 01-119278

ARCH PROJECT NO:	1869.00
DRAWN BY:	LN,TV,JW,OOM
DRAWING SCALE:	AS NOTED
PTN: 61721-78	FILE NO: 7-H4

BID DOCUMENT

APRIL 27, 2021

SHEET TITLE

FLOOR PLAN - LIGHTING

SHEET NUMBER

E-M2.1

FREEDOM HS AUX GYMNASIUM - 220066

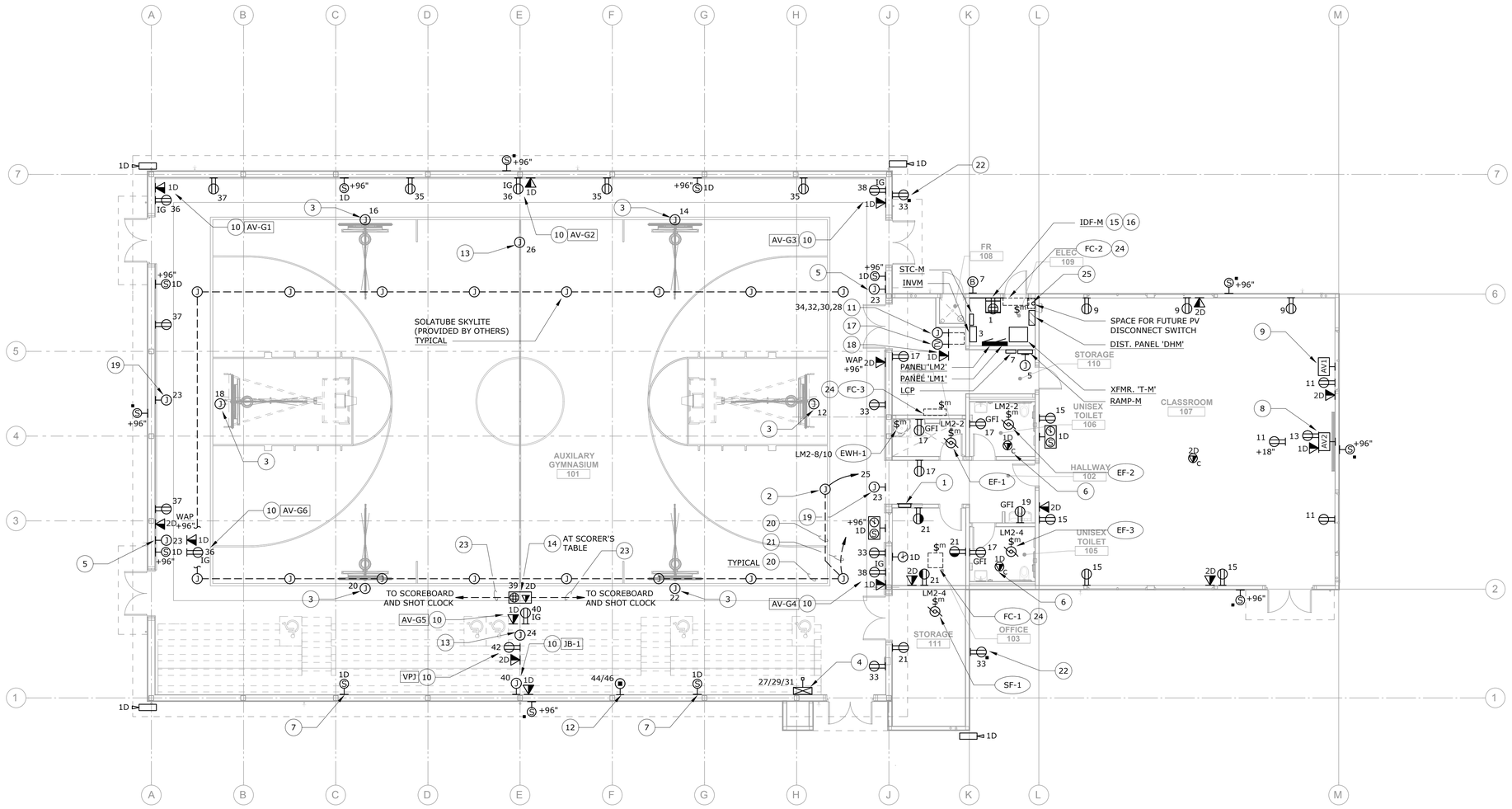

FLOOR PLAN - POWER & SIGNAL

SCALE: 1/8" = 1'-0"

1 E-M3.1

NUMBERED SHEET NOTES

1. PROVIDE FLUSH MOUNTED NEMA 1 STAINLESS STEEL CABINET WITH HINGED, LOCKABLE, LATCHED, FLUSH DOOR, TOP AT 6' A.F.F. MIN. 36"H x 24"W. ENCLOSURE TO INCLUDE CONTROLS FOR GYM LIGHTING, BACKSTOPS AND MOTORIZED SOLATUBES. MOUNT CONTROLS IN SEPARATE J-BOXES INSIDE ENCLOSURE WITH EMT CONDUIT BETWEEN (NO EXPOSED WIRING INSIDE CABINET). CLEARLY LABEL ALL CONTROLS FOR FUNCTION WITH PERMANENT ENGRAVED LAMINATED NAMEPLATES AFFIXED WITH STAINLESS STEEL SCREWS (NO P-TOUCH LABELS).
2. PROVIDE J-BOX FOR SOLATUBE 24VAC/96VA TRANSFORMER (TRANSFORMER PROVIDED BY OTHERS). COORDINATE EXACT LOCATION WITH SOLATUBE INSTALLER. CONNECT 120V CIRCUIT SHOWN COMPLETE TO TRANSFORMER.
3. PROVIDE AND INSTALL J-BOX FOR BACKSTOP TWIST-LOCK PLUG (BY OTHERS). SEE 3/E-7.2. INSTALL J-BOX AT STRUCTURE ABOVE, WITHIN 3' OF THE BACKSTOP WINCH MOTOR. COORDINATE EXACT LOCATION WITH VENDOR SHOP DRAWINGS PRIOR TO ROUGH-IN. LOCATE CONTROLS IN GYM CONTROLS CABINET. SEE NOTE 1.
4. MOTORIZED BLEACHER POWER CONNECTION. VERIFY EXACT LOCATION AND ROUGH-IN REQUIREMENTS WITH BLEACHER MANUFACTURER PRIOR TO ROUGH-IN. LOCATE WITHIN PROXIMITY TO MOTOR AND CONTROL BOX.
5. SCOREBOARD POWER CONNECTION. COORDINATE EXACT CONNECTION LOCATION WITH SCOREBOARD INSTALLER PRIOR TO ROUGH-IN.
6. PROVIDE AND INSTALL DATA PORT FLUSH IN CEILING FOR VAPE DETECTOR, PROVIDED BY OTHERS.
7. AT +60" ABOVE TOP BLEACHER LEVEL.
8. FLUSH WALL MOUNTED AV / POWER BOX ASSEMBLY (ABOVE SHORT-THROW PROJECTOR). HUBBELL netSELECT FPTV 2-GANG BOX #NSAV62M, OR EQUAL, WITH DUPLEX RECEPTACLE AND (1) DATA JACK. PROVIDE WITH STEEL COVER #NSAV6C. COORDINATE MOUNTING HEIGHT OF SHORT-THROW PROJECTOR WITH ARCHITECT.
9. FLUSH 2-GANG J-BOX FOR HDMI AND AUDIO FACEPLATE AND PASS-THRU CABLE ASSEMBLY. PROVIDE AND INSTALL 1.25" CONCEALED CONDUIT BETWEEN J-BOX AND RECESSED AV / POWER BOX ABOVE SHORT-THROW PROJECTOR. SEE NOTE 8.
10. PROVIDE AND INSTALL POWER AND DATA OUTLETS FOR AV EQUIPMENT. SEE AV DRAWINGS FOR COORDINATION.
11. PROVIDE AND INSTALL (4) DEDICATED 120V, 20A CIRCUITS TO RACK. COORDINATE EXACT CONNECTION POINT ON RACK WITH AV INSTALLER. CIRCUIT TO BE (2)#12 + (1)#12G. IN 1" NON-METALLIC FLEX CONDUIT, FROM J-BOX TO AV RACK.
12. PROVIDE AND INSTALL NEMA L6-30 RECEPTACLE FOR AV EQUIPMENT. COORDINATE EXACT LOCATION WITH AV INSTALLER.
13. MOTORIZED DIVIDER CURTAIN POWER CONNECTION. LOCATE J-BOX WITHIN 3' OF CURTAIN MOTOR. VERIFY EXACT LOCATION AND ROUGH-IN REQUIREMENTS WITH MANUFACTURER PRIOR TO ROUGH-IN.
14. FLUSH IN-FLOOR POWER/DATA BOX WITH QUAD RECEPTACLE AND DATA JACKS AS INDICATED. COORDINATE FLUSH ROUGH-IN AND TRIM WITH SPORTS FLOOR INSTALLER PRIOR TO ROUGH-IN.
15. PROVIDE AND INSTALL WALL MOUNTED IDF. IDF SHALL BE CHATSWIRTH CUBE-IT PLUS, #11900-748, OR EQUAL. PROVIDE WITH POWER STRIP (#12820-705) AND FAN/FILTER KIT (#40972-001) MOUNTED INSIDE CABINET. SEE E-5.2 AND 5/E-7.1 FOR MOUNTING.
16. PROVIDE DEDICATED QUAD RECEPTACLE AND J-BOX WITH #2AWG G. TO NEAREST BUILDING ELECTRODE. LOCATE EQUIPMENT WITHIN IDF CABINET.
17. PROVIED (1) CCTV OUTLET IN A 1-GANG BOX AT AV RACK. EXTEND 1" CONDUIT UP FROM BOX FOR CCTV CABLING.

SECURITY SYSTEM SYMBOLS

- PROVIDE AND INSTALL A 2-GANG BOX WITH A 1-GANG RING AND 1/2" C. WITH STRING STUBBED IN TO ACCESSIBLE CEILING SPACE. COORDINATE MOUNTING HEIGHT WITH SECURITY SYSTEM INSTALLER.

NOTES:

1. COORDINATE ALL SECURITY DEVICES EXACT LOCATION & WIRING WITH DISTRICT SECURITY CONTRACTOR PRIOR TO ROUGH-IN, TYP., U.O.N.

A/V SYSTEM NOTES

1. SEE THE AV CONSULTANT'S DRAWINGS AND SPECIFICATIONS FOR ALL AV EQUIPMENT, PANEL, AND DEVICE LOCATIONS AND REQUIREMENTS.
2. THE AV CONTRACTOR WILL PROVIDE AND INSTALL ALL AV EQUIPMENT, RACKS, DEVICES, PANELS AND AV SYSTEMS WIRING.
3. DIVISION 26 SHALL PROVIDE ALL BACKBOXES, CONDUITS AND RACEWAYS REQUIRED FOR THE AV SYSTEM IN COORDINATION WITH THE AV DRAWINGS - SEE AV DRAWINGS FOR ALL AV BACKBOX & CONDUIT REQUIREMENTS.
4. MAINTAIN ALL SEPARATIONS BETWEEN AV SYSTEM CONDUITS AND BETWEEN AV SYSTEM AND POWER CONDUITS.

GENERAL SHEET NOTES

1. ALL BRANCH CIRCUITS SHOWN SHALL HOMERUN TO BRANCH PANEL 'LM1', U.O.N.
2. PROVIDE WIRE GUARD PROTECTIVE COVERS OVER ALL EXPOSED ELECTRICAL / LIGHTING DEVICES IN THE GYMNASIUM SUBJECT TO BALL DAMAGE. COVERS TO BE PROVIDED FOR EXIT SIGNS, FIRE ALARM DEVICES, ANY EXPOSED SWITCHES, AV AND PRODUCTION LIGHTING, OR ANY OTHER DEVICES SUBJECT TO BALL DAMAGE.
3. DEDICATED NEUTRALS REQUIRED FOR ALL BRANCH CIRCUITS.
4. PROVIDE ISOLATED GROUND IN ADDITION TO STANDARD GROUND CONDUCTOR IN ALL CIRCUITING TO I.G RECEPTACLES. ALL I.G. BRANCH CIRCUITS #10AWG; ALL WITH DEDICATED NEUTRAL.

NUMBERED SHEET NOTES

25. PROVIDE AND INSTALL 2" CONDUIT FROM ABOVE FUTURE PV SYSTEM DISCONNECT SWITCH LOCATION TO ROOF. EXTEND FROM APPROXIMATELY 36" BELOW ROOF TO STUB OUT HEIGHT ABOVE ROOF. SEE NOTE 2 ON SHEET E-3.2.

NUMBERED SHEET NOTES

18. PROVIED (1) DATA DROP IN A 1-GANG BOX AT AV RACK. EXTEND 1" CONDUIT UP FROM BOX FOR DATA CABLING.
19. SHOT CLOCK POWER CONNECTION. COORDINATE EXACT CONNECTION LOCATION WITH SHOT CLOCK INSTALLER PRIOR TO ROUGH-IN.
20. PROVIDE AND INSTALL 3/4" CONDUIT FOR SOLATUBE CONTROL WIRING. COORDINATE SOLATUBE LOCATIONS WITH SOLATUBE INSTALLER. CONTROL WIRING BY OTHERS.
21. PROVIDE AND INSTALL 3/4" CONDUIT BETWEEN SOLATUBE HOUSING AND CONTROLS CABINET, FOR CONTROL WIRING. CONTROLS AND CONTROL WIRING BY OTHERS. SEE NOTE 1.
22. PROVIED FLUSH WALL MOUNTED WEATHERPROOF COVER WITH LOCKING LATCH, PASS & SEYMOUR 4600 SERIES, OR EQUAL. REQUIRES SPECIAL ROUGH-IN.
23. PROVIDE AND INSTALL (2) 3/4" CONDUITS FOR SCOREBOARD AND SHOT CLOCK CONTROL WIRES, (1) CONDUIT TO EACH. SEE NOTES 5 AND 19.
24. OUTDOOR UNIT SUBFEEDS LINE VOLTAGE POWER TO INDOOR UNIT. PROVIDE, INSTALL AND CONNECT COMPLETE INTERCONNECTING CONDUCTORS PER MFR. REQUIREMENTS IN CONDUIT SIZED PER NEC REQUIREMENTS. SEE E-3.2 FOR OUTDOOR UNIT. VERIFY AND COORDINATE WITH DIVISION 23.

KEYPLAN

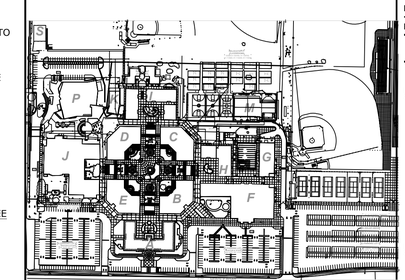

QUATTROCCHI KWOK ARCHITECTS
Main Office:
636 Fifth Street, Santa Rosa, CA 95404
East Bay:
55 Harrison Street, Suite 525
Oakland, CA 94607
(707) 576-0829

O'MAHONY & MYER
ELECTRICAL ENGINEERS — LIGHTING DESIGN
490 REDWOOD HWY, SUITE 245
SAN RAFAEL, CALIFORNIA 94903
(415) 492-0420/FAX (415) 479-0662
www.ommconsulting.com

REGISTERED PROFESSIONAL ENGINEER — COLEMAN P. MYER — No.14738 — Exp. 6/21 — ELECTRICAL — STATE OF CALIFORNIA

FREEDOM HIGH SCHOOL

NEW AUXILIARY GYMNASIUM

1050 NEROLY RD,
OAKLEY, CA 94561

LIBERTY UNION HIGH SCHOOL DISTRICT

REVISIONS

DSA APP NO. 01-119278

ARCH PROJECT NO:	1869.00
DRAWN BY:	LN,TV,JW,OOM
DRAWING SCALE:	AS NOTED
PTN: 61721-78	FILE NO: 7-H4

BID DOCUMENT

APRIL 27, 2021

SHEET TITLE

FLOOR PLAN - POWER & SIGNAL

SHEET NUMBER

E-M3.1

FREEDOM HS AUX GYMNASIUM - 220066

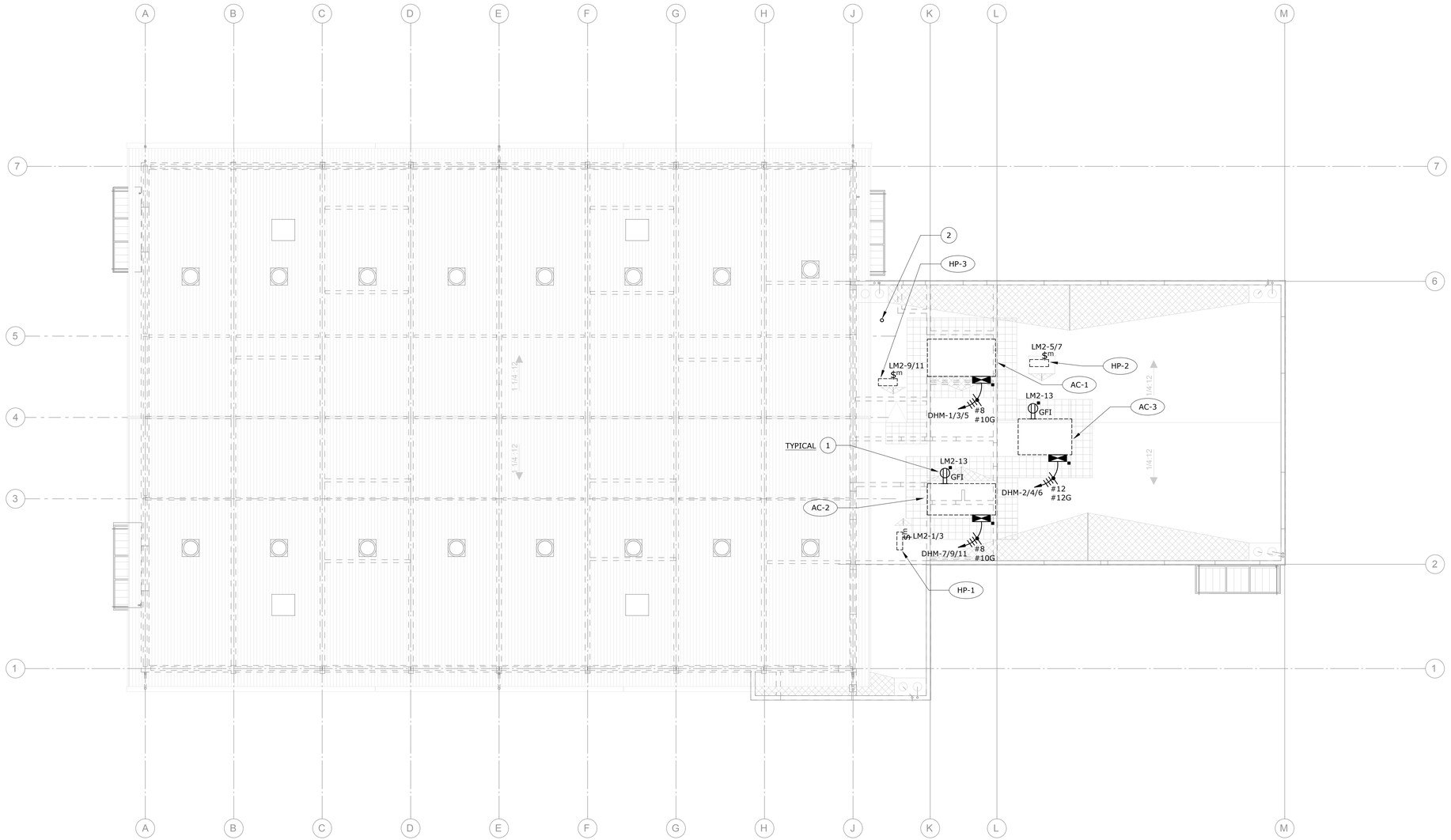

ROOF PLAN - ELECTRICAL

SCALE: 1/8" = 1'-0"

1 / E-M3.2

NORTH

NUMBERED SHEET NOTES

1. PROVIDE AND INSTALL ROOF MOUNTED SERVICE OUTLET SUCH THAT THE DISTANCE BETWEEN AN OUTLET AND ANY SERVICABLE MECHANICAL EQUIPMENT IS NO GREATER THAN 25'.
2. STUB OUT AND CAP 2" CONDUIT FOR FUTURE PV SYSTEM AT THIS LOCATION. SEE 2/E-7.1. AND NOTE 25 ON SHEET E-3.1.

KEYPLAN

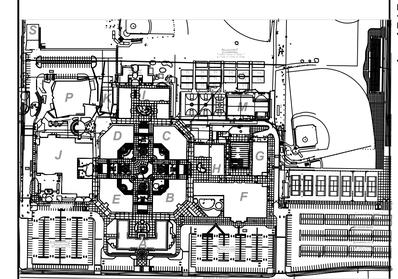

QUATTROCCHI KWOK ARCHITECTS

Main Office:
636 Fifth Street, Santa Rosa, CA 95404
East Bay:
55 Harrison Street, Suite 525
Oakland, CA 94607
(707) 576-0829

O'MAHONY & MYER
ELECTRICAL ENGINEERS and LIGHTING DESIGN
4340 REDWOOD HWY, SUITE 245
SAN RAFAEL, CALIFORNIA 94903
(415) 492-0520/FAX (415) 479-9662
www.ommconsulting.com

REGISTERED PROFESSIONAL ENGINEER
P. COLEMAN
No.14738
Exp. 6/21
ELECTRICAL
STATE OF CALIFORNIA

FREEDOM HIGH SCHOOL

NEW AUXILIARY GYMNASIUM

1050 NEROLY RD,
OAKLEY, CA 94561

LIBERTY UNION HIGH SCHOOL DISTRICT

REVISIONS

DSA APP NO. 01-119278

ARCH PROJECT NO:	1869.00
DRAWN BY:	LN,TV,JW,OOM
DRAWING SCALE:	AS NOTED
PTN: 61721-78	FILE NO: 7-H4

BID DOCUMENT

APRIL 27, 2021

SHEET TITLE

ROOF PLAN - ELECTRICAL

SHEET NUMBER

E-M3.2

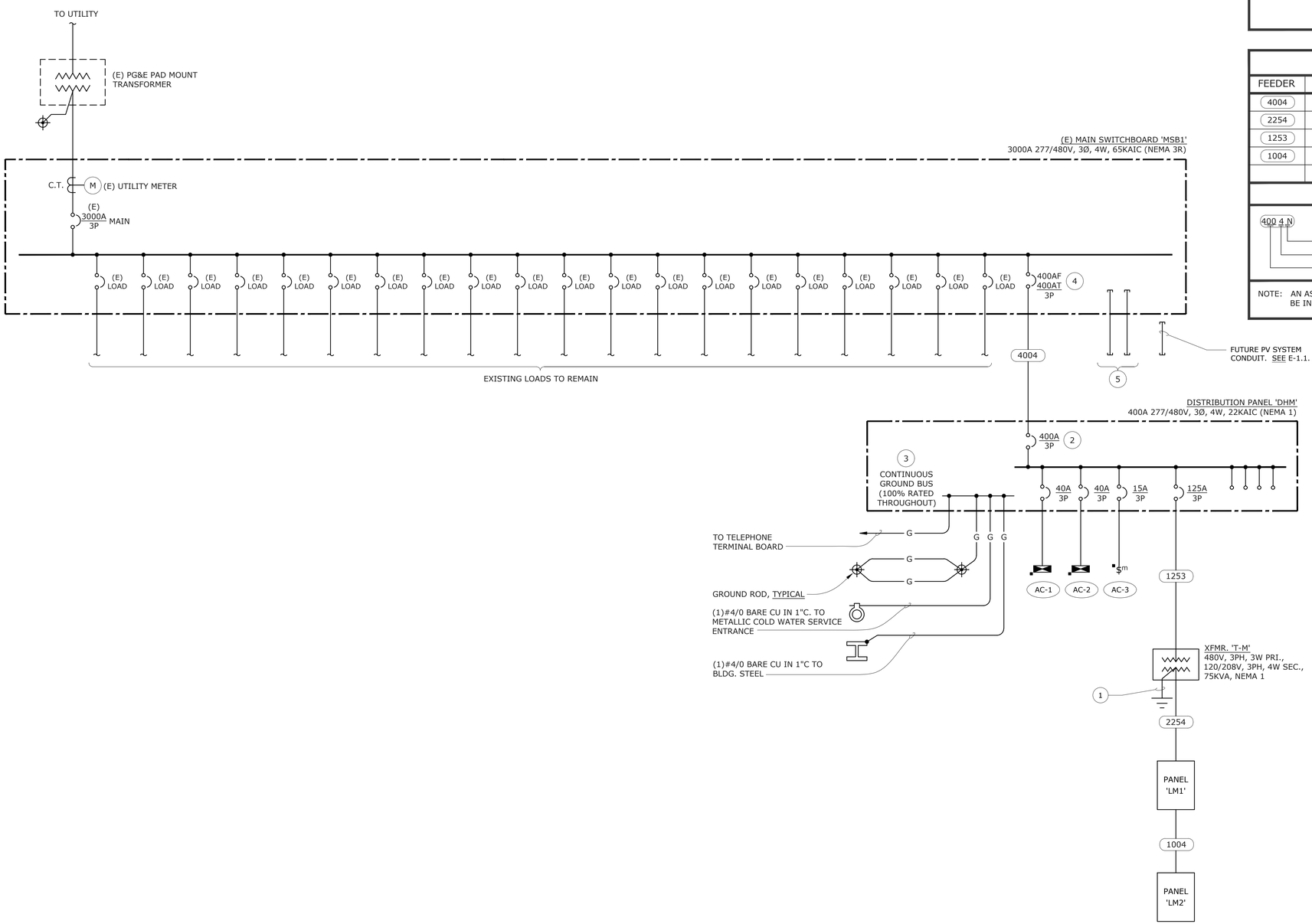

NUMBERED SHEET NOTES

1. PROVIDE AND INSTALL (1)#4/0 G. IN 1-1/2"C. TO GROUNDING ELECTRODE.
2. LABEL AS 'MAIN BUILDING DISCONNECT'.
3. IN ADDITION TO GROUNDING INDICATED, BOND ALL COLD WATER PIPING SYSTEM, GAS PIPING SYSTEMS, AND SPRINKLER PIPING SYSTEMS TO THE BUILDING GROUNDING ELECTRODE SYSTEM WITH CODE SIZED BONDING CONDUCTOR IN (1) ¾ INCH CONDUIT. BOND WHEREVER THERE IS A BREAK IN THE CONTINUITY OF THESE SYSTEMS THROUGHOUT THE PROJECT.
4. (N) CIRCUIT BREAKER TO MATCH (E) IN MANUFACTURER AND AIC RATING.
5. PROVIDE AND INSTALL (2) 4" UNDERGROUND SCHEDULE 40 PVC RACEWAYS FOR FUTURE CONSTRUCTION. SEE E-1.1.

COPPER FEEDER SCHEDULE

FEEDER	CONDUIT	CONDUCTORS
4004	(1) 4"	(4) #500 KCMIL & (1) #1/0 G.
2254	(1) 3"	(4) #4/0 & (1) #4 G.
1253	(1) 1-1/2"	(3) #1/0 & (1) #6 G.
1004	(1) 2"	(4) #1 & (1) #6 G.

FEEDER TAG KEY

400 4 N

- INDICATES DOUBLE NEUTRAL
- WIRE QUANTITY
- FEEDER AMPACITY

NOTE: AN ASTERIK IN THE "FEEDER" COLUMN SYMBOL INDICATES NEW CONDUIT TO BE INSTALLED.

SINGLE LINE DIAGRAM - POWER

SCALE: NONE

1 / E-5.1

QUATTROCCHI KWOK ARCHITECTS
Main Office:
636 Fifth Street, Santa Rosa, CA 95404
East Bay:
55 Harrison Street, Suite 525
Oakland, CA 94607
(707) 576-0829

O'MAHONY & MYER
ELECTRICAL ENGINEERS and LIGHTING DESIGN
430 REDWOOD HWY, SUITE 245
SAN RAFAEL, CALIFORNIA 94903
(415) 492-0420/FAX (415) 479-0662
www.ommconsulting.com

REGISTERED PROFESSIONAL ENGINEER
P. COLEMAN
No.14738
Exp. 6/21
ELECTRICAL
STATE OF CALIFORNIA

FREEDOM HIGH SCHOOL

NEW AUXILIARY GYMNASIUM

1050 NEROLY RD,
OAKLEY, CA 94561

LIBERTY UNION HIGH SCHOOL DISTRICT

REVISIONS

DSA APP NO. 01-119278

ARCH PROJECT NO: 1869.00
DRAWN BY: LN,TV,JW,OOM
DRAWING SCALE: AS NOTED
PTN: 61721-78 FILE NO: 7-H4

BID DOCUMENT

APRIL 27, 2021

SHEET TITLE

SINGLE LINE DIAGRAM - POWER

SHEET NUMBER

E-5.1

DATA EQUIPMENT LIST

1	WALL MOUNTED, ENCLOSED, 48" HIGH, DATA CABINET WITH LATCHING DOOR (EATON OR EQUAL)	SEE SPECIFICATIONS
2	WIRE MANAGEMENT	SEE SPECIFICATIONS
3	ACTIVE DISTRICT NETWORK EQUIPMENT	BY NETWORK INTEGRATOR OR OWNER
4	FIBER OPTIC PATCH PANEL	SEE SPECIFICATIONS
5	CATEGORY 6A MODULAR PATCH CORDS	SEE SPECIFICATIONS
6	CATEGORY 6 PATCH PANEL	48-PORT MODULAR TO 110 - SEE SPECIFICATIONS
7	25-PAIR FEEDER CABLE WITH FEMALE AMP END/ PIGTAIL TO 110 BLOCKS	CABLE EXCHANGE #253-X90-50F
8	110 BLOCK FOR COPPER PAIR TERMINATIONS	SEE SPECIFICATIONS

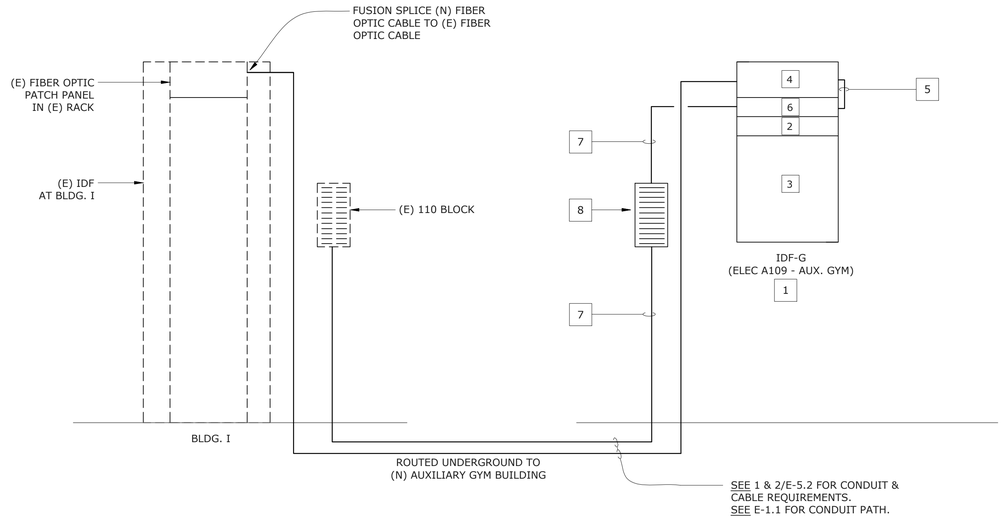

TYPICAL TELECOM CABINET ELEVATIONS

SCALE: NONE

3 / E-5.2

GENERAL CLOCK/SPEAKER NOTES

1. ALL CLOCK/SPEAKER DEVICES SHALL BE IP, AND ARE OWNER FURNISHED, CONTRACTOR INSTALLED ('OFCI').
2. PROVIDE ALL REQUIRED PROGRAMMING MODIFICATIONS TO THE EXISTING PA AND CLOCK SYSTEM TO ACCOMMODATE THESE ADDITIONS. PRIOR TO BID, VERIFY THAT THE EXISTING PROGRAM FILES FOR THIS SITE ARE AVAILABLE. INCLUDE IN THE BID ALL COSTS REQUIRED TO RECREATE ANY MISSING OR DEFECTIVE FILES.
3. ALL RELOCATIONS AND ADDITIONS TO THE EXISTING SYSTEM SHALL BE PERFORMED BY A CURRENTLY AUTHORIZED AND FACTORY-TRAINED DEALER.

SIGNAL SYSTEM NUMBERED NOTES

1. TELECOM CABLING TO BE FULLY TERMINATED ON JACKS AND LOCATED AT A CONCEALED LOCATION FOR CABLE PATCHING TO CLOCK/SPEAKER DEVICE. PROVIDE QUANTITIES AS SHOWN ON THE FLOOR PLANS AND DIAGRAMS. COORDINATE EXACT LOCATION AND REQUIREMENTS PRIOR TO ROUGH-IN.
2. DATA JACK SYMBOLS NOT SHOWN ON FLOOR PLANS FOR CLOCK/SPEAKER DEVICES, ONLY THE CLOCK/SPEAKER SYMBOL. CONTRACTOR SHALL PROVIDE AND INSTALL ALL JACKS, PER THE REQUIREMENTS OF NUMBERED NOTE 1, IN QUANTITIES AS SHOWN ON THE FLOOR PLANS AND DIAGRAMS.

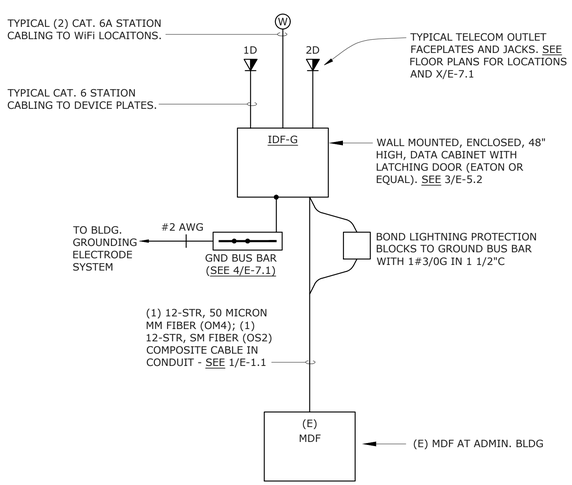

IP TELEPHONE AND DATA SYSTEM RISER DIAGRAM

SCALE: NONE

2 / E-5.2

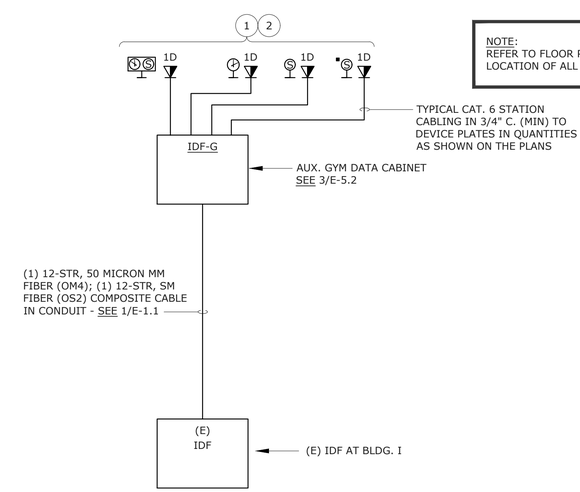

NOTE:
REFER TO FLOOR PLANS FOR QUANTITY AND LOCATION OF ALL DEVICES AND EQUIPMENT.

CLOCK / SPEAKER SYSTEM RISER DIAGRAM

SCALE: NONE

1 / E-5.2

QUATTROCCHI KWOK ARCHITECTS
Main Office:
636 Fifth Street, Santa Rosa, CA 95404
East Bay:
55 Harrison Street, Suite 525
Oakland, CA 94607
(707) 576-0829

O'MAHONY & MYER
ELECTRICAL ENGINEERS and LIGHTING DESIGN
4340 REDWOOD HWY, SUITE 245
SAN RAFAEL, CALIFORNIA 94903
(415) 492-0420/FAX (415) 479-0662
www.ommconsulting.com

REGISTERED PROFESSIONAL ENGINEER
P. COLEMAN RIBBENS
No.14738
Exp. 6/21
ELECTRICAL
STATE OF CALIFORNIA

FREEDOM HIGH SCHOOL

NEW AUXILIARY GYMNASIUM

1050 NEROLY RD,
OAKLEY, CA 94561

LIBERTY UNION HIGH SCHOOL DISTRICT

REVISIONS

DSA APP NO. 01-119278

ARCH PROJECT NO:	1869.00
DRAWN BY:	LN,TV,JW,OOM
DRAWING SCALE:	AS NOTED
PTN: 61721-78	FILE NO: 7-H4

BID DOCUMENT

APRIL 27, 2021

SHEET TITLE

SINGLE LINE DIAGRAMS - SIGNAL

SHEET NUMBER

E-5.2

FREEDOM HS AUX GYMNASIUM – 220066

LIGHTING CONTROL SEQUENCE OF OPERATIONS

SPACE TYPE	OCC SENSOR SETPOINT	PHOTOCELL SETPOINT	NORMAL BUSINESS HOURS		AFTER HOURS		TIME SCHEDULE OVERRIDE			AUTOMATIC DEMAND RESPONSE
			LIGHTING	RECEPTACLES	LIGHTING	RECEPTACLES	LIGHTING	RECEPTACLES	DURATION	
OFFICE	MANUAL ON TO PREVIOUS LEVEL/OFF IN 20 MIN	NA	MANUAL ON/OFF BY OCCUPANCY SENSOR	ON/OFF BY OCCUPANCY SENSOR	SAME AS DURING NORMAL BUSINESS HOURS	ON/OFF BY OCCUPANCY SENSOR	NA	NA	NA	NOT REQUIRED
ELECTRIC/ CUSTODIAN	MANUAL ON/OFF	NA	MANUAL ON/OFF	NOT REQUIRED TO BE CONTROLLED	SAME AS DURING NORMAL BUSINESS HOURS	NOT REQUIRED TO BE CONTROLLED	NA	NA	NA	NOT REQUIRED
HALL	AUTO ON/ OFF IN 20 MIN	NA	DIMS TO 50% UPON VACANCY	NOT REQUIRED TO BE CONTROLLED	DIMS TO 0% UPON VACANCY	NOT REQUIRED TO BE CONTROLLED	MANUAL SWITCH	NA	2 HR	NOT REQUIRED
ELECTRICAL EQUIPMENT ROOMS	MANUAL ON/OFF	NA	ON/OFF VIA MANUAL CONTROLS	NOT REQUIRED TO BE CONTROLLED	SAME AS DURING NORMAL BUSINESS HOURS	NOT REQUIRED TO BE CONTROLLED	NA	NA	NA	NOT REQUIRED
STORAGE	MANUAL ON/ OFF IN 20 MIN	NA	ON/OFF PER OCCUPANCY SENSOR, ON/DIM/OFF VIA MANUAL CONTROLS	NOT REQUIRED TO BE CONTROLLED	SAME AS DURING NORMAL BUSINESS HOURS	NOT REQUIRED TO BE CONTROLLED	NA	NA	NA	NOT REQUIRED
CLASSROOM	MANUAL ON/ OFF IN 20 MIN	75 FC AT WORKPLANE	ON/OFF PER OCCUPANCY SENSOR, DIM VIA MANUAL CONTROLS	NOT REQUIRED TO BE CONTROLLED	SAME AS DURING NORMAL BUSINESS HOURS	NOT REQUIRED TO BE CONTROLLED	NA	NA	NA	NOT REQUIRED
GYM	NA	60 FC AT FLOOR	SCHEDULED ON, ON/DIM/OFF VIA MANUAL CONTROLS	NOT REQUIRED TO BE CONTROLLED	SCHEDULED OFF, ON/DIM/OFF VIA MANUAL CONTROLS	NOT REQUIRED TO BE CONTROLLED	MANUAL SWITCH	NA	2 HR	NOT REQUIRED
RESTROOMS	WALL SENSOR MANUAL ON/OFF IN 20 MIN.	NA	MANUAL ON/OFF PER OCCUPANCY SENSOR	NOT REQUIRED TO BE CONTROLLED	SAME AS DURING NORMAL BUSINESS HOURS	NOT REQUIRED TO BE CONTROLLED	NA	NA	NA	NOT REQUIRED
EXTERIOR LIGHTS, ZONES S1	NA	NA		NA	CONTROLLED BY DISTRICT BMS VIA RELAY PROVIDED BY DIV 23, ON DUSK TO LATE EVENING.	NA	ON/OFF VIA MANUAL CONTROL BY DIV 23	NA	2 HR	NOT REQUIRED
EXTERIOR LIGHTS, ZONES S2	NA	NA		NA	CONTROLLED BY DISTRICT BMS VIA RELAY PROVIDED BY DIV 23, ON DUSK TO DAWN.	NA	ON/OFF VIA MANUAL CONTROL BY DIV 23	NA	2 HR	NOT REQUIRED

NOTES:
1. THE INTENT OF THIS SCHEDULE IS TO CLARIFY THE PROGRAMMING AND FUNCTION OF CONTROLS THAT MAY BE LOCATED IN EACH SPACE TYPE.
2. THIS SCHEDULE IS NOT INTENDED TO DEFINE WHICH CONTROLS ARE TO BE INSTALLED IN EACH SPACE TYPE.
3. FOR ACTUAL CONTROL DEVICES TO BE INSTALLED IN EACH SPACE, REFER TO PLANS.
4. ALL SETPOINTS AND TIME SCHEDULES TO BE VERIFIED WITH OWNER PRIOR TO PROGRAMMING.
5. ALL LIGHTING CONTROL DEVICES TO BE CALIBRATED AND COMPLIANCE PERFORMANCE TESTED PER SPECIFICATION SECTION 26 0800 PARAGRAPH 3.2.

WIRING LEGEND

- BRANCH CIRCUIT WIRING - PROVIDED AND INSTALLED BY CONTRACTOR. EXACT QTY., TYPE AND SIZE VARIES
- CAT6A UTP CABLING - PROVIDED AND INSTALLED BY CONTRACTOR, VERIFY WIRE TYPE WITH LIGHTING CONTROL MANUFACTURER
- 0-10V DIMMING CONTROL WIRING

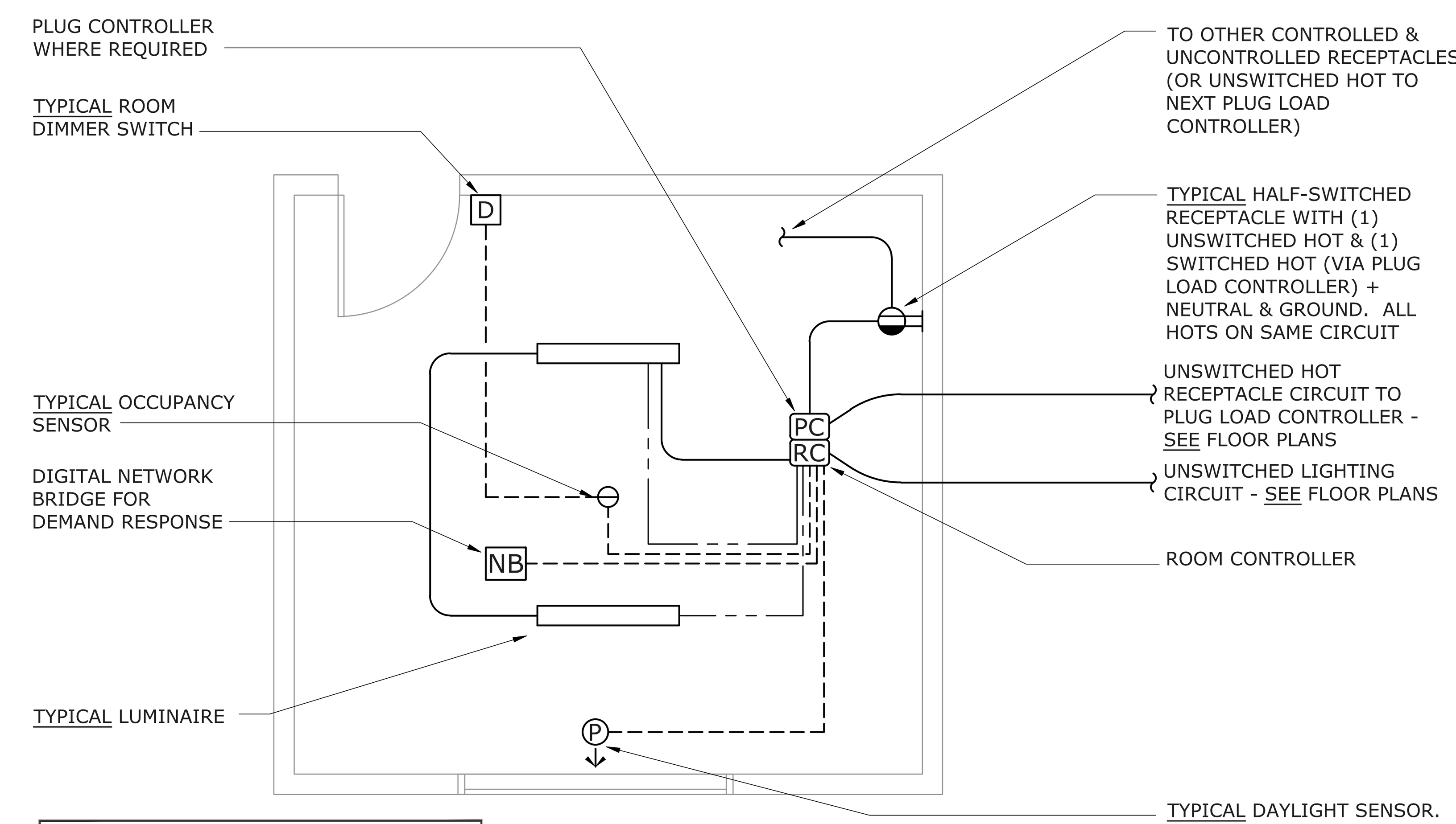

NOTE:
SEE SPECIFIC ROOM CONTROLLER WIRING DIAGRAMS FOR EACH APPLICATION.

TYPICAL ROOM CONTROL DIAGRAM WITH DEMAND RESPONSE CAPABILITY
1 / E-5.3
SCALE: NONE
FILE: L:\DETAILS\LIGHT\LTG CONTROL WATTSTOPPER DLM\LLCW007A

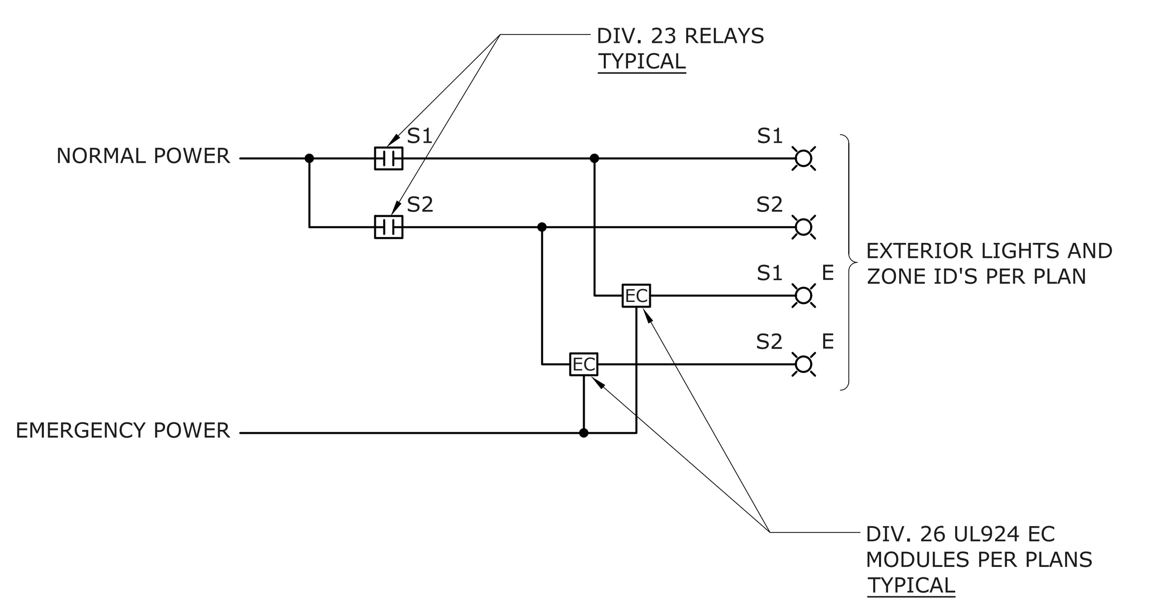

EXTERIOR LIGHTING CONTROL DETAIL
5 / E-5.3
SCALE: NONE
FILE:

SEQUENCE OF OPERATION:
Upon the loss of normal power, the LVS Emergency Control Module will bypass the Room Controller and force the emergency fixtures ON. The Room Controller will force the dimmed emergency fixture to 100%.

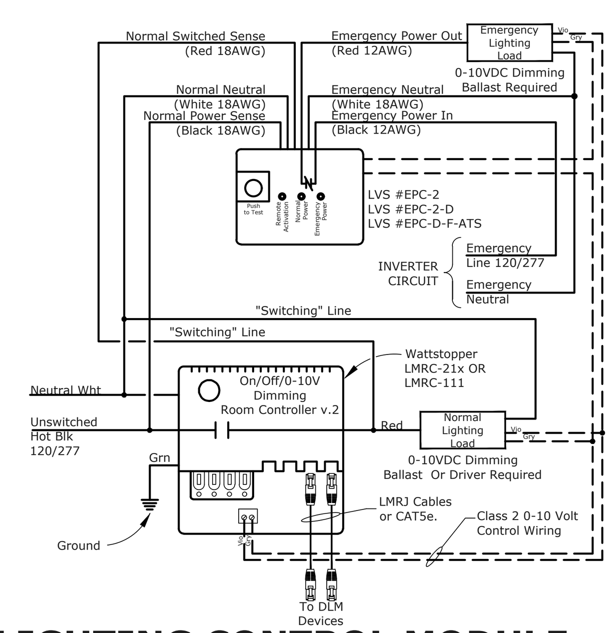

EMERGENCY LIGHTING CONTROL MODULE WIRING DIAGRAM FOR DIMMED EMERGENCY FIXTURES CONTROLLED BY 0-10V DIMMING ROOM CONTROLLER
3 / E-5.3
SCALE: NONE
FILE: L:\DETAILS\LIGHT\LTG CONTROL WATTSTOPPER DLM\LLCW010B

INVERTER UNIT SPECIFICATIONS

1. ALL EMERGENCY SOURCE CIRCUITS SHALL BE INSTALLED IN SEPARATE RACEWAYS (FROM NORMAL POWER), PER 2017 NEC 700.10(B), OR APPLICABLE CODE AT THE TIME OF PERMITTING.
2. REFER ALSO TO SPECIFICATIONS SECTION 265101. UNITS SHALL BE MYERS POWER PRODUCTS ILLUMINATOR SERIES EM OR APPROVED EQUAL:
   1-EM-3-S-BA2003-M-Z-2YW
3. UNITS SHALL BE 120V 1PH 2W INPUT, 120V OUTPUT WITH 20AMP OUTPUT CIRCUIT BREAKER, RATED AS FOLLOWS:
   2.2KVA
4. INPUT SHALL BE EQUIPPED WITH ANSI 62.41 SURGE PROTECTION AND 1HZ NOMINAL SYNCHRONIZING SLEW RATE.
5. OUTPUT VOLTAGE STATIC REGULATION SHALL BE +/- 5% FOR 100% RESISTIVE LOAD.
6. OUTPUT DISTORTION SHALL BE 5% THD MAXIMUM.
7. OVERLOAD RATING: 150% MOMENTARY; 120% FOR 5 MINUTES.
8. TRANSFER TIME: NO BREAK
9. BATTERY SHALL BE SEALED LEAD CALCIUM, 10 YEAR LIFE, 90 MINUTE RUN TIME, WITH AUTO-DISCONNECT FOR LOW BATTERY VOLTAGE.
10. PROVIDE RS232 PORT FOR EXTERNAL COMMUNICATIONS.
11. INVERTER SHALL BE PWM TYPE.
12. PROVIDE MAINTENANCE BYPASS.
13. PROVIDE IN NEMA 1 ENCLOSURE, FRONT ACCESS ONLY.
14. PROVIDE FACTORY STARTUP AND TEST OF UNIT TO THE SATISFACTION OF BUILDING INSPECTION AUTHORITIES AND WITH MAXIMUM 4 HOURS OF PERSONNEL TRAINING FOLLOWING STARTUP.
15. AUTO SELF TESTING.
16. PROVIDE OUTPUT CIRCUIT BREAKERS RATED 20AMPS EACH WITH DEDICATED CIRCUITS FOR EACH OF THE EMERGENCY LIGHTING LOADS:
    4 OUTPUT BREAKERS
17. SEISMIC QUALIFIED.
18. SUBMIT FOR REVIEW AND APPROVAL.
19. PROVIDE DRY CONTACT CLOSURE OUTPUT WHEN NORMAL POWER IS OFF AND INVERTER IS RUNNING ON BATTERY. CONTACT CLOSURE WILL BE USED TO BYPASS LIGHTING CONTROLS AND BRING EMERGENCY LIGHTS TO FULL BRIGHTNESS.
20. INVERTER SHALL BE UL924 LISTED.

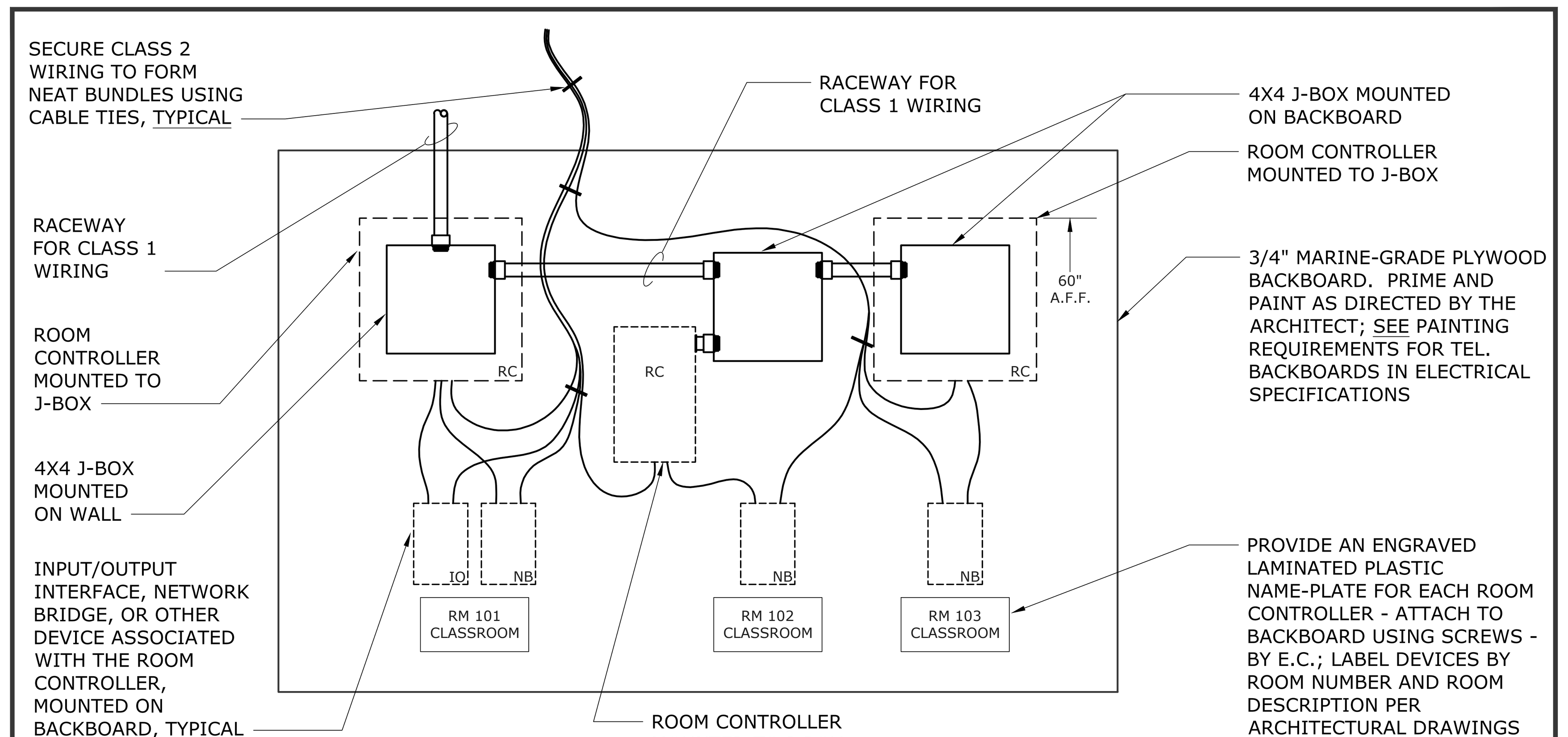

TYPICAL MOUNTING OF ROOM CONTROLLERS IN ELECTRIC ROOMS, IDF ROOMS & STORAGE ROOMS
4 / E-5.3
SCALE: NONE
FILE: L:\DETAILS\LIGHT\LTG CONTROL WATTSTOPPER DLM\LLCW019

CORRIDORS & STAIRWAYS:

Run Cat6A UTP cable from room controller to Segment Manager. Multi-zone 0-10v dimmed application with ceiling mounted occupancy sensors for Partial Off w/ Auto Off and manual dimming. Lights will turn on automatically from the occupancy sensor upon entering the space, and can be dimmed manually from the device on the wall. Lights will dim down to a 50% light level when the space is un-occupied during the buildings "Occupied Hours". Upon entering the "After-Hours" mode, the same occupancy sensors will automatically turn the lights off when the space is unoccupied. Time-out of sensor to be set at 20 minutes.

NOTE:
One, two or three zone 0-10v dimmed application with wall or ceiling mounted occupancy sensor(s) for shut off and manual dimming. Lights shall be turned on manually, U.O.N. and can be dimmed or switched manually from the device on the wall. Lights will be turned off automatically by the occupancy sensor. Time-out of sensor to be set at 20 minutes. In Corridors, stairs and restrooms, occupancy sensors shall be programmed for auto on/auto off.

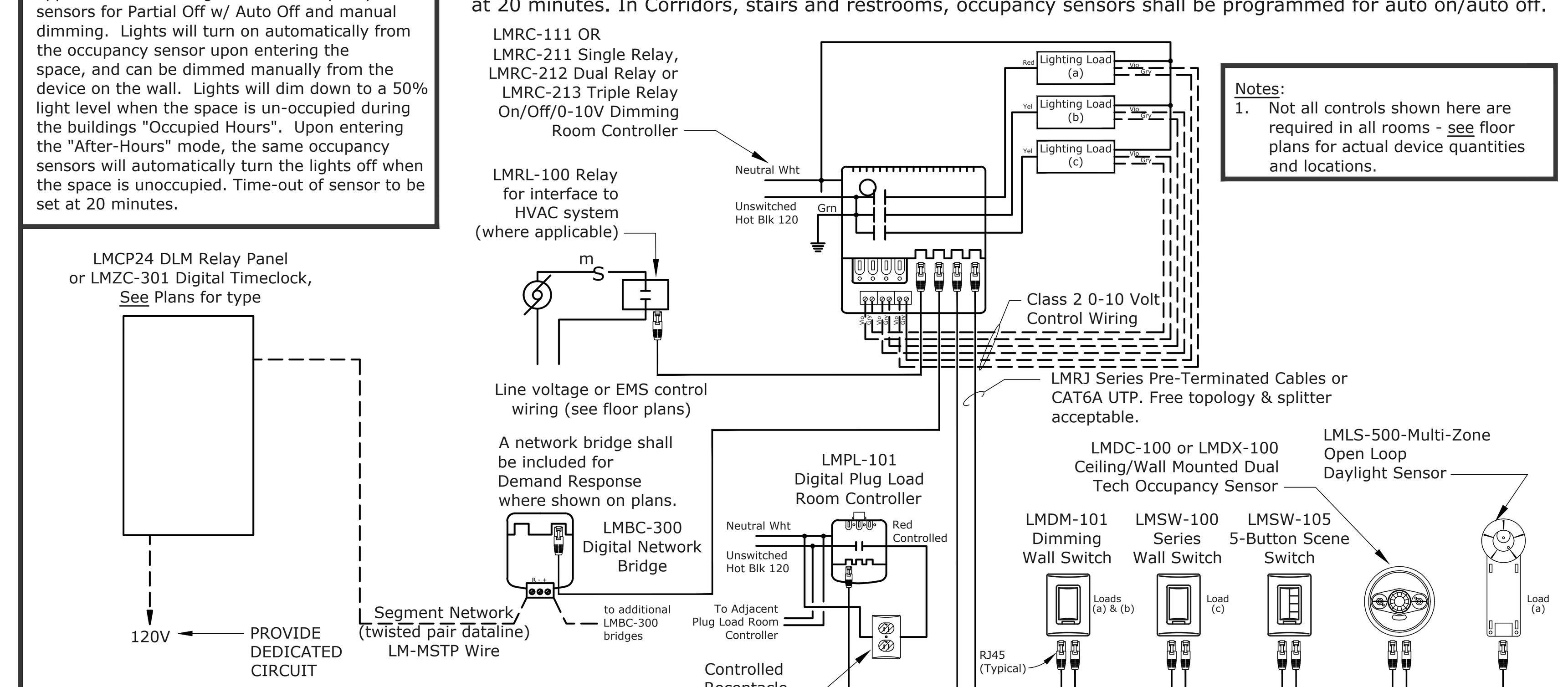

ROOM & PLUG CONTROLLER W/ ISOLATED RELAY & FUTURE DEMAND RESPONSE CAPABLE
2 / E-5.3
SCALE: NONE
FILE: L:\DETAILS\LIGHT\LTG CONTROL WATTSTOPPER DLM\LLCW011A

QUATTROCCHI KWOK ARCHITECTS
Main Office:
636 Fifth Street, Santa Rosa, CA 95404
East Bay:
55 Harrison Street, Suite 525
Oakland, CA 94607
(707) 576-0829

O'MAHONY & MYER
ELECTRICAL ENGINEERING and LIGHTING DESIGN
4340 REDWOOD HWY, SUITE 245
SAN RAFAEL, CALIFORNIA 94903
(415) 492-0420/FAX (415) 479-9662
www.ommconsulting.com

REGISTERED PROFESSIONAL ENGINEER
PIERRE J. COLENDER
No.14738
Exp. 6/21
ELECTRICAL
STATE OF CALIFORNIA

FREEDOM HIGH SCHOOL

NEW AUXILIARY GYMNASIUM

1050 NEROLY RD, OAKLEY, CA 94561

LIBERTY UNION HIGH SCHOOL DISTRICT

REVISIONS

DSA APP NO. 01-119278

ARCH PROJECT NO:	1869.00
DRAWN BY:	LN,TV,JW,OOM
DRAWING SCALE:	AS NOTED
PTN: 61721-78	FILE NO: 7-H4

BID DOCUMENT

APRIL 27, 2021

SHEET TITLE

LIGHTING CONTROL DIAGRAMS

SHEET NUMBER

E-5.3

FREEDOM HS AUX GYMNASIUM - 220066

DISTRIBUTION PANEL DHM

VOLTS: 277 / 480 V
PHASE: 3 PH
WIRE: 4 W
BUSSING: 400A
POLES:

MAIN BRKR: 400A/3P
FEEDER: SEE SINGLE LINE
CONDUIT: SEE SINGLE LINE
MOUNTED: SURFACE
AIC RATING: 33k

LOAD DESCRIPTION	TYPE	A	B	C	BRKR.	CKT.	CKT.	BRKR.	A	B	C	TYPE	LOAD DESCRIPTION
\	M	7.09			-	1	2	-	2.88			M	\
AC-1	M		7.09		40/3	3	4	15/3		2.88		M	AC-3
/	M			7.09	-	5	6	-			2.88	M	/
\	M	7.09			-	7	8	-	17.90			M	\
AC-2	M		7.09		40/3	9	10	125/3		15.56		M	XFMR.T-M
/	M			7.09	-	11	12	-			13.65	M	/
S P A C E						13	14						S P A C E
S P A C E						15	16						S P A C E
S P A C E						17	18						S P A C E
		14.18	14.18	14.18					20.78	18.44	16.53		

DEMAND LOAD SUMMARY	CONN. KVA	DEMAND FACTOR	DEMAND KVA
TYPE "M": NON-CONTINUOUS / MISC. LOADS	98.29	100%	98.29
TYPE "L": LIGHTING / CONTINUOUS LOADS	0.00	125%	0.00
TYPE "R": RECEPTACLES (FIRST 10KVA)	0.00	100%	0.00
TYPE "R": RECEPTACLES (OVER 10KVA)	0.00	50%	0.00
TYPE "H": HVAC / MECHANICAL LOADS	0.00	100%	0.00
TOTALS:	98.29		98.29

PHASE A: 34.96 **KVA**
PHASE B: 32.62 **KVA**
PHASE C: 30.71 **KVA**

126.21 **MAX AMPS / PHASE**

PANEL LM1

VOLTS: 120 / 208
PHASE: 3 PH
WIRE: 4 W
BUSSING: 225A
POLES: 54P

MAINS: 225A MCB
FEEDER: SEE SINGLE LINE
CONDUIT: SEE SINGLE LINE
MOUNTED: SURFACE
AIC RATING: 10K

LOAD DESCRIPTION	TYPE	A	B	C	BRKR.	CKT.	CKT.	BRKR.	A	B	C	TYPE	LOAD DESCRIPTION
ELEC 109 - IDF	M	1.00			20/1	1	2	20/1	1.50			L	107, 110, 111
ELEC 109 - INVM	M		1.00		20/1	3	4	20/1		0.51		L	EXTERIOR
STORAGE 110 - RAMP-M	M			0.48	20/1	5	6	20/1			1.46	L	AUXILARY GYMNASIUM 101
STORAGE 110 - LCP	M	0.50			20/1	7	8	20/1	1.46			L	AUXILARY GYMNASIUM 101
CLASSROOM 107	R		0.54		20/1	9	10	20/1		1.31		L	101, 102, 103, 104, 105
CLASSROOM 107	R			0.54	20/1	11	12	20/1			1.00	M	GYM 101 - MOTORIZED BACKBOARDS
CLASSROOM 107 - PROJECTOR	M	0.70			20/1	13	14	20/1	1.00			M	GYM 101 - MOTORIZED BACKBOARDS
CLASSROOM 107			0.72		20/1	15	16	20/1		1.00		M	GYM 101 - MOTORIZED BACKBOARDS
104, 105, 106, 110	R			0.72	20/1	17	18	20/1			1.00	M	GYM 101 - MOTORIZED BACKBOARDS
HALLWAY 102 - WATER FOUNTAIN	M	0.70			20/1	19	20	20/1	1.00			M	GYM 101 - MOTORIZED BACKBOARDS
OFFICE 103, STORAGE 111	R		0.72		20/1	21	22	20/1		1.00		M	GYM 101 - MOTORIZED BACKBOARDS
GYM 101 - SCOREBOARDS, SHOT CLOCK	M			0.36	20/1	23	24	30/1			1.40	M	GYM 101 - MOTORIZED CURTAIN
GYM 101 - MOTORIZED SOLATUBES	M	0.10			20/1	25	26	30/1	1.40			M	GYM 101 - MOTORIZED CURTAIN
\	M		1.10		-	27	28	20/1		0.60		M	STORAGE 110 - AV RACK
MOTORIZED BLEACHERS	M			1.10	20/3	29	30	20/1			0.60	M	STORAGE 110 - AV RACK
/	M	1.10			-	31	32	20/1	0.60			M	STORAGE 110 - AV RACK
GYM 101, EXTERIOR	R		0.90		20/1	33	34	20/1		0.60		M	STORAGE 110 - AV RACK
GYM 101	R			0.54	20/1	35	36	20/1			1.20	M	GYM 101 - AV EQUIPMENT
GYM 101	R	0.54			20/1	37	38	20/1	0.80			M	GYM 101 - AV EQUIPMENT
GYM 101 - SCORER'S TABLE	R		0.36		20/1	39	40	20/1		0.80		M	GYM 101 - AV EQUIPMENT
SPARE					20/1	41	42	20/1			0.80	M	GYM 101 - AV EQUIPMENT
SPARE					20/1	43	44	30/2	2.08			M	GYM 101 - AV EQUIPMENT
SPARE					20/1	45	46	-		2.08		M	/
SPARE					20/1	47	48	20/1					SPARE
SPARE					20/1	49	50	-	3.41			M	\
SPARE					20/1	51	52	100/3		2.85		M	PANEL LM2
SPARE					20/1	53	54	-			2.09	M	/
		4.64	5.34	3.74					13.25	10.75	9.55		

DEMAND LOAD SUMMARY	CONN. KVA	DEMAND FACTOR	DEMAND KVA
TYPE "M": NON-CONTINUOUS / MISC. LOADS	35.46	100%	35.46
TYPE "L": LIGHTING / CONTINUOUS LOADS	6.24	125%	7.80
TYPE "R": RECEPTACLES (FIRST 10KVA)	4.86	100%	4.86
TYPE "R": RECEPTACLES (OVER 10KVA)	0.00	50%	0.00
TYPE "H": HVAC / MECHANICAL LOADS	0.00	100%	0.00
TOTALS:	46.56		48.12

PHASE A: 17.90 **KVA**
PHASE B: 16.10 **KVA**
PHASE C: 13.29 **KVA**

149.14 **MAX AMPS / PHASE**

PANEL LM2

VOLTS: 120 / 208 V
PHASE: 3 PH
WIRE: 4 W
BUSSING: 100A
POLES: 24P

MAIN BRKR: MLO
FEEDER: SEE SINGLE LINE
CONDUIT: SEE SINGLE LINE
MOUNTED: SURFACE
AIC RATING: 10K

LOAD DESCRIPTION	TYPE	A	B	C	BRKR.	CKT.	CKT.	BRKR.	A	B	C	TYPE	LOAD DESCRIPTION
HP-1	H	0.75			15/2	1	2	20/1	0.02			H	EF-1, EF-2
/	H		0.75		-	3	4	20/1		0.02		H	SF-1, EF-3
HP-2	H			1.14	20/2	5	6	20/1			0.36	R	ROOF SERVICE OUTLETS
/	H	1.14			-	7	8	20/2	1.50			M	EWH-1
HP-3	H		0.58		15/2	9	10	-		1.50		M	/
/	H			0.58	-	11	12	20/1					SPARE
SPARE					20/1	13	14	20/1					SPARE
SPARE					20/1	15	16	20/1					SPARE
SPARE					20/1	17	18	20/1					SPARE
SPARE					20/1	19	20	20/1					SPARE
S P A C E						21	22						S P A C E
S P A C E						23	24						S P A C E
		1.89	1.33	1.73					1.52	1.52	0.36		

DEMAND LOAD SUMMARY	CONN. KVA	DEMAND FACTOR	DEMAND KVA
TYPE "M": NON-CONTINUOUS / MISC. LOADS	3.00	100%	3.00
TYPE "L": LIGHTING / CONTINUOUS LOADS	0.00	125%	0.00
TYPE "R": RECEPTACLES (FIRST 10KVA)	0.36	100%	0.36
TYPE "R": RECEPTACLES (OVER 10KVA)	0.00	50%	0.00
TYPE "H": HVAC / MECHANICAL LOADS	4.99	100%	4.99
TOTALS:	8.35		8.35

PHASE A: 3.41 **KVA**
PHASE B: 2.85 **KVA**
PHASE C: 2.09 **KVA**

28.44 **MAX AMPS / PHASE**

QUATTROCCHI KWOK ARCHITECTS
Main Office:
636 Fifth Street, Santa Rosa, CA 95404
East Bay:
55 Harrison Street, Suite 525
Oakland, CA 94607
(707) 576-0829

O'MAHONY & MYER
ELECTRICAL ENGINEERS and LIGHTING DESIGN
490 REDWOOD HWY, SUITE 245
SAN RAFAEL, CALIFORNIA 94903
(415) 492-0420/FAX (415) 479-0662
www.ommconsulting.com
REGISTERED PROFESSIONAL ENGINEER
COLEMAN
Plot No.14738
Exp. 6/21
ELECTRICAL
STATE OF CALIFORNIA

FREEDOM HIGH SCHOOL

NEW AUXILIARY GYMNASIUM

1050 NEROLY RD,
OAKLEY, CA 94561

LIBERTY UNION HIGH SCHOOL DISTRICT

REVISIONS

DSA APP NO. 01-119278

ARCH PROJECT NO: 1869.00
DRAWN BY: LN,TV,JW,CM
DRAWING SCALE: AS NOTED
PTN: 61721-78 FILE NO: 7-H4

BID DOCUMENT

APRIL 27, 2021

SHEET TITLE

PANEL SCHEDULES

SHEET NUMBER

E-6.1

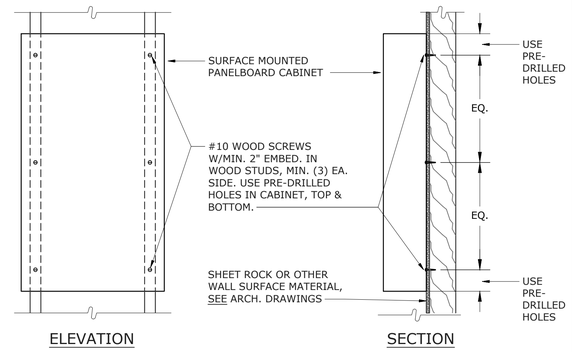

NOTE:
MAXIMUM PANELBOARD WEIGHT: 550 POUNDS

SURFACE PANELBOARD MOUNTING-WOOD FRAMING

SCALE: NONE

7 / E-7.1

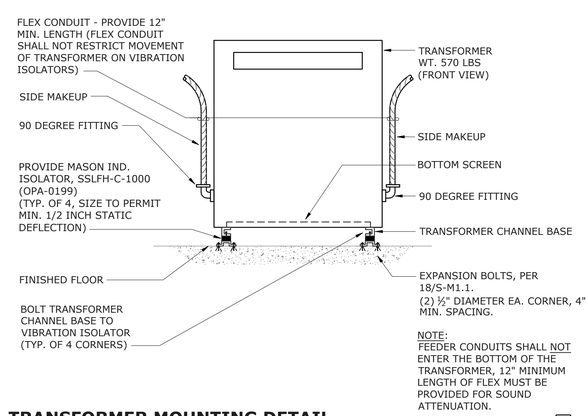

NOTE:
FEEDER CONDUITS SHALL NOT ENTER THE BOTTOM OF THE TRANSFORMER, 12" MINIMUM LENGTH OF FLEX MUST BE PROVIDED FOR SOUND ATTENUATION.

TRANSFORMER MOUNTING DETAIL

SCALE: NONE

4 / E-7.1

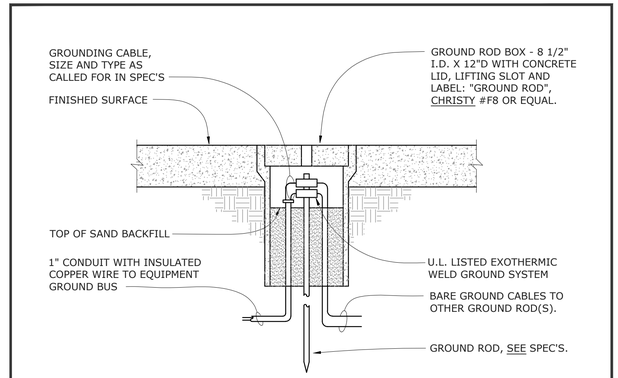

GROUND ROD INSTALLATION

SCALE: NONE

1 / E-7.1

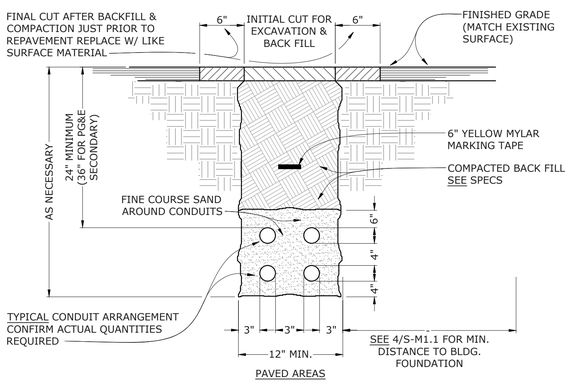

TYPICAL TRENCH SECTION

SCALE: NONE

8 / E-7.1

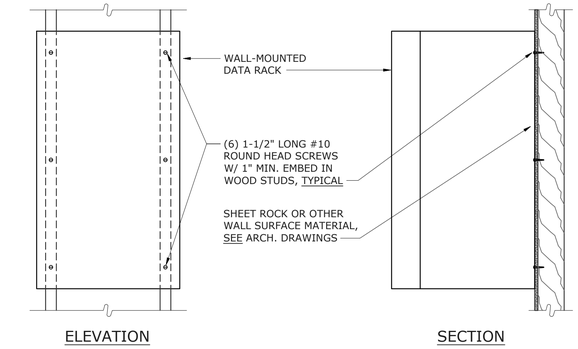

NOTE:
MAXIMUM RACK WEIGHT: 150 POUNDS

DATA RACK MOUNTING

SCALE: NONE

5 / E-7.1

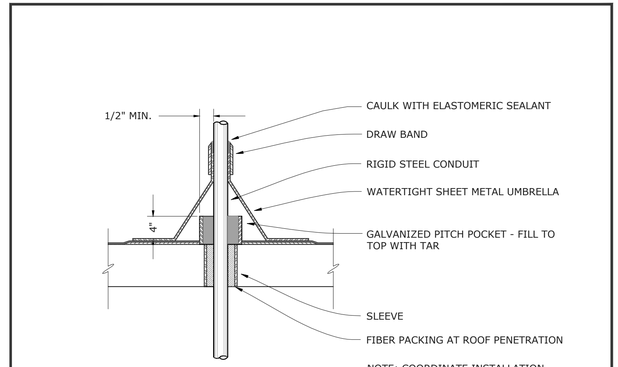

NOTE: COORDINATE INSTALLATION WITH GENERAL CONTRACTOR

ROOF PENETRATION DETAIL

SCALE: NOT TO SCALE

2 / E-7.1

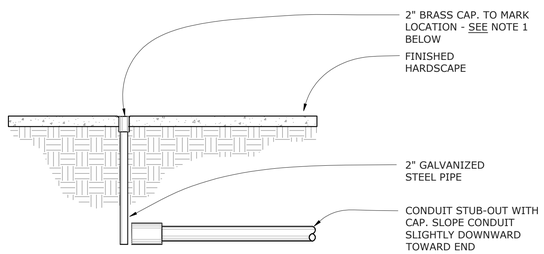

NOTES:

1. ENGRAVE BRASS CAP INDICATING FUNCTION & FINAL DESTINATION
2. RECORD ALL ACTUAL STUB-OUT LOCATIONS ON AS-BUILT DRAWINGS

CONDUIT STUB-OUT

SCALE: NONE

9 / E-7.1

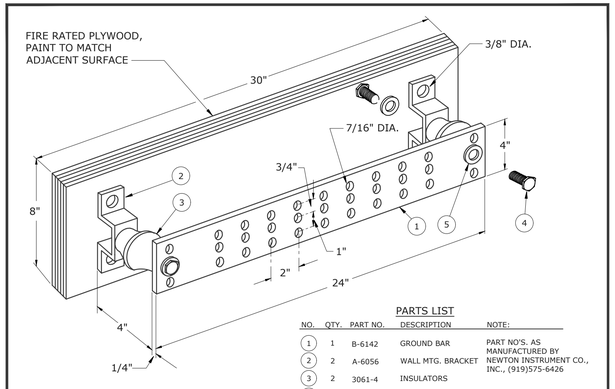

PARTS LIST

NO.	QTY.	PART NO.	DESCRIPTION	NOTE:
1	1	B-6142	GROUND BAR	PART NO'S. AS MANUFACTURED BY NEWTON INSTRUMENT CO., INC., (919)575-6426
2	2	A-6056	WALL MTG. BRACKET	
3	2	3061-4	INSULATORS	
4	4	3012-1	5/8-11 X 1" HHCS	
5	4	3015-B	5/8 LOCKWASHER	

GROUND BUS BAR

SCALE: NONE

6 / E-7.1

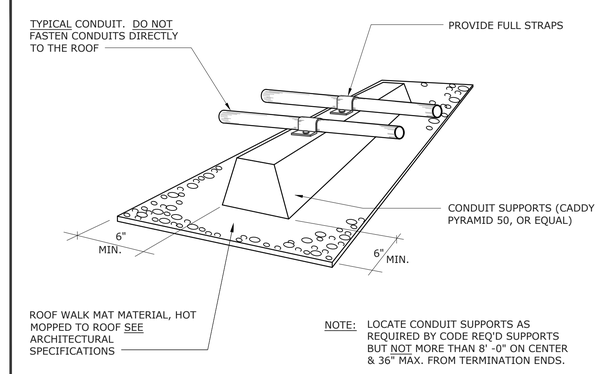

NOTE: LOCATE CONDUIT SUPPORTS AS REQUIRED BY CODE REQ'D SUPPORTS BUT NOT MORE THAN 8' -0" ON CENTER & 36" MAX. FROM TERMINATION ENDS.

ROOF MOUNTED ELECTRICAL CONDUIT SUPPORTS

SCALE: NONE

3 / E-7.1

QUATTROCCHI KWOK ARCHITECTS
Main Office:
636 Fifth Street, Santa Rosa, CA 95404
East Bay:
55 Harrison Street, Suite 525
Oakland, CA 94607
(707) 576-0829

O'MAHONY & MYER
ELECTRICAL ENGINEERS and LIGHTING DESIGN
4340 REDWOOD HWY., SUITE 245
SAN RAFAEL, CALIFORNIA 94903
(415) 499-0480/FAX (415) 499-0662
www.ommconsulting.com

REGISTERED PROFESSIONAL ENGINEER
P. COLEMAN
No.14738
Exp. 6/21
ELECTRICAL
STATE OF CALIFORNIA

FREEDOM HIGH SCHOOL

NEW AUXILIARY GYMNASIUM

1050 NEROLY RD,
OAKLEY, CA 94561

LIBERTY UNION HIGH SCHOOL DISTRICT

REVISIONS

DSA APP NO. 01-119278

ARCH PROJECT NO: 1869.00
DRAWN BY: LN,TV,JW,SOM
DRAWING SCALE: AS NOTED
PTN: 61721-78 FILE NO: 7-H4

BID DOCUMENT

APRIL 27, 2021

SHEET TITLE

DETAILS

SHEET NUMBER

E-7.1

FREEDOM HS AUX GYMNASIUM - 220066

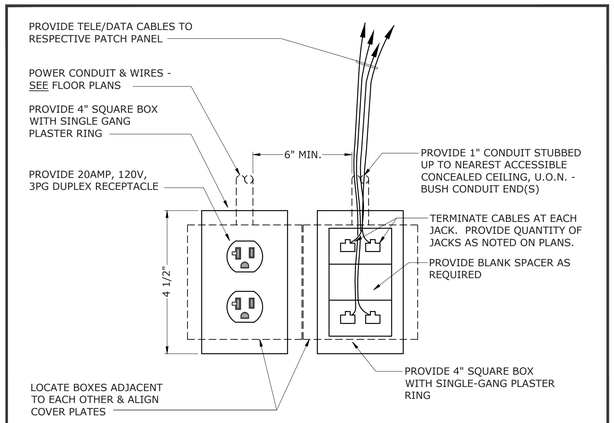

COMBINATION DUPLEX POWER & TELECOM OUTLET BOXES (1 / E-7.2)

SCALE: NONE

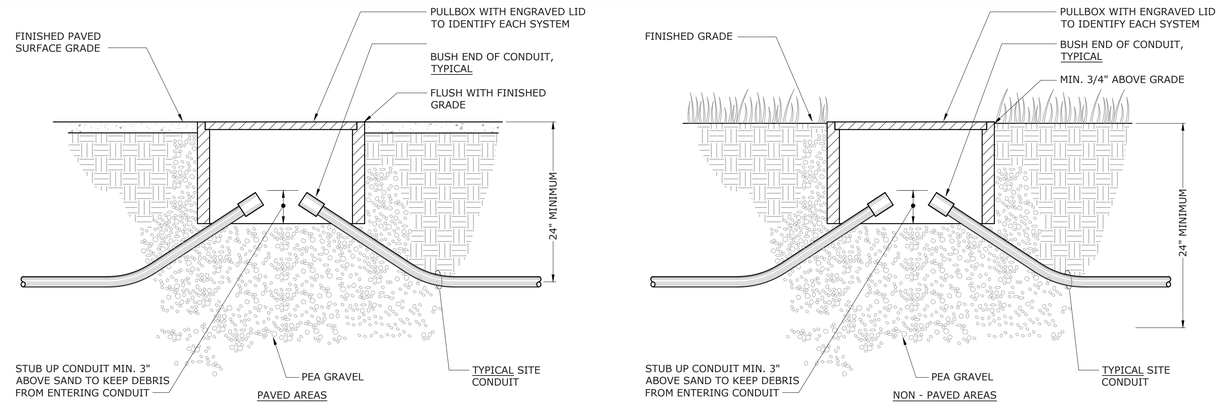

TYPICAL PULLBOX DETAILS (2 / E-7.2)

SCALE: NOT TO SCALE

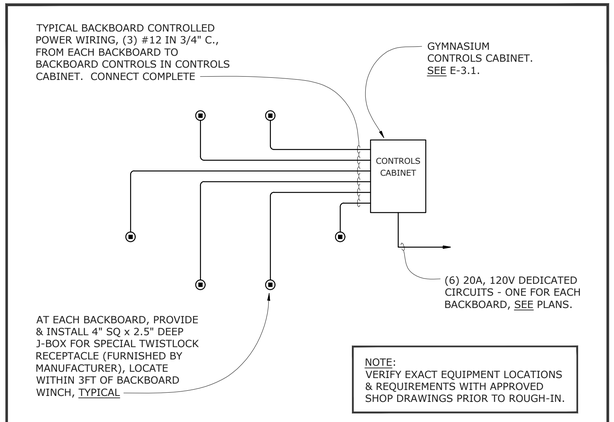

TYPICAL GYM BACKBOARDS (3 / E-7.2)

SCALE: NONE

QUATTROCCHI KWOK ARCHITECTS

Main Office:
636 Fifth Street, Santa Rosa, CA 95404
East Bay:
55 Harrison Street, Suite 525
Oakland, CA 94607
(707) 576-0829

O'MAHONY & MYER
ELECTRICAL ENGINEERS and LIGHTING DESIGN
4340 REDWOOD HWY., SUITE 245
SAN RAFAEL, CALIFORNIA 94903
(415) 492-0420/FAX (415) 479-0662
www.ommconsulting.com

REGISTERED PROFESSIONAL ENGINEER
COLEMAN J. BREEN
P.E. No.14738
Exp. 6/21
ELECTRICAL
STATE OF CALIFORNIA

FREEDOM HIGH SCHOOL

NEW AUXILIARY GYMNASIUM

1050 NEROLY RD,
OAKLEY, CA 94561

LIBERTY UNION HIGH SCHOOL DISTRICT

REVISIONS

DSA APP NO. 01-119278

ARCH PROJECT NO: 1869.00

DRAWN BY: LN,TV,JW,DGM

DRAWING SCALE: AS NOTED

PTN: 61721-78 FILE NO. 7-H4

BID DOCUMENT

APRIL 27, 2021

SHEET TITLE

DETAILS

SHEET NUMBER

E-7.2

FREEDOM HS AUX GYMNASIUM – 220066

STATE OF CALIFORNIA
Indoor Lighting
NRCC-LTI-E — CALIFORNIA ENERGY COMMISSION

CERTIFICATE OF COMPLIANCE			**NRCC-LTI-E**
Project Name:	Freedom HS Auxiliary Gym	**Report Page:**	**(Page 7 of 8)**
Project Address:	1050 Neroly Rd	**Date Prepared:**	12/17/2020

U. DECLARATION OF REQUIRED CERTIFICATES OF ACCEPTANCE

Selections have been made based on information provided in this document. If any selection have been changed by the permit applicant, an explanation should be included in Table E. Additional Remarks. These documents must be provided to the building inspector during construction and any with "-A" in the form name must be completed through an Acceptance Test Technician Certification Provider (ATTCP). For more information visit: http://www.energy.ca.gov/title24/attcp/providers.html

Yes	No	Form/Title	Field Inspector Pass	Field Inspector Fail
●	○	NRCA-LTI-02-A - Must be submitted for occupancy sensors and automatic time switch controls.	☐	☐
●	○	NRCA-LTI-03-A - Must be submitted for automatic daylight controls.	☐	☐
●	○	NRCA-LTI-04-A - Must be submitted for demand responsive lighting controls.	☐	☐
○	●	NRCA-LTI-05-A. - Must be submitted for institutional tuning power adjustment factor (PAF)	☐	☐

STATE OF CALIFORNIA
Indoor Lighting
NRCC-LTI-E — CALIFORNIA ENERGY COMMISSION

CERTIFICATE OF COMPLIANCE			**NRCC-LTI-E**
Project Name:	Freedom HS Auxiliary Gym	**Report Page:**	**(Page 4 of 8)**
Project Address:	1050 Neroly Rd	**Date Prepared:**	12/17/2020

H. INDOOR LIGHTING CONTROLS (Not including PAFs)

Area Level Controls

04	05	06	07	08	09	10	11	12	
Area Description	Complete Building or Area Category Primary Function Area	Area Controls §130.1(a)	Multi-Level Controls §130.1(b)	Shut-Off Controls §130.1(c)	Primary/Skylit Daylighting §130.1(d)	Secondary Daylighting §140.6(d)	Interlocked Systems §140.6(a)1	Field Inspector Pass	Field Inspector Fail
Gym	All Other Space Types	Manual ON/OFF	Dimmer	Occupancy Sensor	N/A	N/A	No	☐	☐
Office	Office 250 square feet or less	Manual ON/OFF	Dimmer	Occupancy Sensor	N/A	N/A	No	☐	☐
Classroom	Classroom, Lecture, or Training Vocational Area	Manual ON/OFF	Dimmer	Occupancy Sensor	Included	Included	No	☐	☐
Restroom	Restrooms	Manual ON/OFF	Exempt*	Occupancy Sensor	N/A	N/A	No	☐	☐
Storage	All Other Space Types	Manual ON/OFF	Exempt*	Occupancy Sensor	N/A	N/A	No	☐	☐
Elec	Electrical Mechancial Telephone Room	Manual ON/OFF	Exempt*	Exempt*	N/A	N/A	No	☐	☐
Corridor	Corridor Area	Manual ON/OFF	Dimmer	Occupancy Sensor	N/A	N/A	No	☐	☐

*NOTES: Controls with a * require a note in the space below explaining how compliance is achieved.
EX: Conference 1: Primary/Skylight Daylighting: Exempt because less than 120 watts of general lighting; EXCEPTION 1 to §130.1(d)2

13

Plan Sheet Showing Daylit Zones:

Restroom Exc.2 130.1(b)

Storage

Elec

STATE OF CALIFORNIA
Indoor Lighting
NRCC-LTI-E — CALIFORNIA ENERGY COMMISSION

CERTIFICATE OF COMPLIANCE			**NRCC-LTI-E**
Project Name:	Freedom HS Auxiliary Gym	**Report Page:**	**(Page 1 of 8)**
Project Address:	1050 Neroly Rd	**Date Prepared:**	12/17/2020

This document is used to demonstrate compliance with requirements in §110.9, §110.12(c), §130.0, §130.1, §140.6 and §141.0(b)2 for indoor lighting scopes using the prescriptive path.

A. GENERAL INFORMATION

01	Project Location (city)	Oakley	04	Total Conditioned Floor Area (ft^2)	9,315
02	Climate Zone	12	05	Total Unconditioned Floor Area (ft^2)	0
03	Occupancy Types Within Project (select all that apply):		06	# of Stories (Habitable Above Grade)	1

☒ Office ☐ Retail ☐ Warehouse ☐ Hotel/Motel ☐ School ☒ Support Areas
☐ Parking Garage ☐ High-Rise Residential ☐ Relocatable ☐ Healthcare ☒ Other (Write in) See Table I

B. PROJECT SCOPE

This table includes any lighting systems that are within the scope of the permit application and are demonstrating compliance using the prescriptive path outlined in §140.6 or §141.0(b)2 for alterations.

Scope of Work	Conditioned Spaces		Unconditioned Spaces	
01	02	03	04	05
My Project Consists of (check all that apply):	Calculation Method	Area (ft^2)	Calculation Method	Area (ft^2)
☒ New Lighting System	Area Category Method	9315	Area Category Method	0
☐ New Lighting System - Parking Garage				
Total Area of Work (ft^2)	9315		0	

STATE OF CALIFORNIA
Indoor Lighting
NRCC-LTI-E — CALIFORNIA ENERGY COMMISSION

CERTIFICATE OF COMPLIANCE			**NRCC-LTI-E**
Project Name:	Freedom HS Auxiliary Gym	**Report Page:**	**(Page 8 of 8)**
Project Address:	1050 Neroly Rd	**Date Prepared:**	12/17/2020

DOCUMENTATION AUTHOR'S DECLARATION STATEMENT

I certify that this Certificate of Compliance documentation is accurate and complete.

Documentation Author Name: Pieter Colenbrander	Documentation Author Signature: P. Colenbrander
Company: O'Mahony & Myer	Signature Date: 2020-12-17
Address: 4340 Redwood Hwy Suite 245	CEA/ HERS Certification Identification (if applicable): 14738
City/State/Zip: San Rafael CA 94903	Phone: 415-492-0420

RESPONSIBLE PERSON'S DECLARATION STATEMENT

I certify the following under penalty of perjury, under the laws of the State of California:

1. The information provided on this Certificate of Compliance is true and correct.
2. I am eligible under Division 3 of the Business and Professions Code to accept responsibility for the building design or system design identified on this Certificate of Compliance (responsible designer)
3. The energy features and performance specifications, materials, components, and manufactured devices for the building design or system design identified on this Certificate of Compliance conform to the requirements of Title 24, Part 1 and Part 6 of the California Code of Regulations.
4. The building design features or system design features identified on this Certificate of Compliance are consistent with the information provided on other applicable compliance documents, worksheets, calculations, plans and specifications submitted to the enforcement agency for approval with this building permit application.
5. I will ensure that a completed signed copy of this Certificate of Compliance shall be made available with the building permit(s) issued for the building, and made available to the enforcement agency for all applicable inspections. I understand that a completed signed copy of this Certificate of Compliance is required to be included with the documentation the builder provides to the building owner at occupancy.

Responsible Designer Name: Pieter Colenbrander	Responsible Designer Signature: P. Colenbrander
Company: O'Mahony & Myer	Date Signed: 2020-12-17
Address: 4340 Redwood Hwy, Suite 245	License: 14738
City/State/Zip: San Rafael CA 94903	Phone: 415-492-0420

STATE OF CALIFORNIA
Indoor Lighting
NRCC-LTI-E — CALIFORNIA ENERGY COMMISSION

CERTIFICATE OF COMPLIANCE			**NRCC-LTI-E**
Project Name:	Freedom HS Auxiliary Gym	**Report Page:**	**(Page 5 of 8)**
Project Address:	1050 Neroly Rd	**Date Prepared:**	12/17/2020

I. LIGHTING POWER ALLOWANCE: COMPLETE BUILDING OR AREA CATEGORY METHODS

Each area complying using the Complete Building or Area Category Methods per §140.6(b) are included in this table. Column 06 indicates if additional lighting power allowances per §140.6(c) or adjustments per §140.6(a) are being used .

Conditioned Spaces

01	02	03	04	05	06	
Area Description	Complete Building or Area Category Primary Function Area	Allowed Density (W/ft^2)	Area (ft^2)	Allowed Wattage (Watts)	Additional Allowance / Adjustment: Area Category	Additional Allowance / Adjustment: PAF
Office	Office 250 square feet or less	0.7	116	81.2	No	No
Gymnasium	All Other Space Types	2.25	7,183	16,161.8	No	No
Classroom	Classroom, Lecture, or Training Vocational Area	0.7	1,635	1,144.5	No	No
Restroom	Restrooms	0.65	160	104	No	No
Elec	Electrical Mechancial Telephone Room	0.4	69	27.6	No	No
Corridor	Corridor Area	0.6	152	91.2	No	No
		TOTALS:	9,315	17,610.3	See Tables J, or P for detail	

J. ADDITIONAL ALLOWANCE: AREA CATEGORY METHOD QUALIFYING LIGHTING SYSTEM

This section does not apply to this project.

K. TAILORED METHOD GENERAL LIGHTING POWER ALLOWANCE

This section does not apply to this project.

L. ADDITIONAL LIGHTING ALLOWANCE: TAILORED WALL DISPLAY

This section does not apply to this project.

M. ADDITIONAL LIGHTING ALLOWANCE: TAILORED FLOOR AND TASK LIGHTING

This section does not apply to this project.

N. ADDITIONAL LIGHTING ALLOWANCE: TAILORED ORNAMENTAL/SPECIAL EFFECTS

This section does not apply to this project.

STATE OF CALIFORNIA
Indoor Lighting
NRCC-LTI-E — CALIFORNIA ENERGY COMMISSION

CERTIFICATE OF COMPLIANCE			**NRCC-LTI-E**
Project Name:	Freedom HS Auxiliary Gym	**Report Page:**	**(Page 2 of 8)**
Project Address:	1050 Neroly Rd	**Date Prepared:**	12/17/2020

C. COMPLIANCE RESULTS

If any cell on this table says "DOES NOT COMPLY" or "COMPLIES with Exceptional Conditions" refer to Table D. for guidance.

Lighting in conditioned and unconditioned spaces must not be combined for compliance per §140.6(b)1	Allowed Lighting Power per §140.6(b) (Watts): 01 Complete Building §140.6(c)1 (See Table I)	02 Area Category §140.6(c)2 (See Table I)	03 Area Category Additional §140.6(c)2G (+) (See Table J)	04 Tailored §140.6(c)3 (+) (See Table K)	=	05 Total Allowed (Watts)	≥	Adjusted Lighting Power per §140.6(a) (Watts): 06 Total Designed (Watts) (See Table F)	07 Adjustments PAF Lighting Control Credits §140.6(a)2 (-) (See Table P)	=	08 Total Adjusted (Watts) *Includes Adjustments	Compliance Results: 09 05 must be >= 08 §140.6
Conditioned		17,610.3	0		=	17,610	≥	5,220	0	=	5220	COMPLIES
Unconditioned					=		≥			=		
Controls Compliance (See Table H for Details)												COMPLIES
Rated Power Reduction Compliance (See Table Q for Details)												

D. EXCEPTIONAL CONDITIONS

This table is auto-filled with uneditable comments because of selections made or data entered in tables throughout the form.

E. ADDITIONAL REMARKS

This table includes remarks made by the permit applicant to the Authority Having Jurisdiction.

F. INDOOR LIGHTING FIXTURE SCHEDULE

This table includes all permanent designed lighting and all portable lighting in offices.

Designed Wattage: Conditioned Spaces

01 Name or Item Tag	02 Complete Luminaire Description	03 Modular (Track) Fixture	04 Small Aperture & Color Change[1]	05 Watts per luminaire[2]	06 How is Wattage determined	07 Total Number of Luminaires	08 Excluded per §140.6(a)3	09 Design Watts	10 Field Inspector Pass	10 Field Inspector Fail
AA1	AA1 - High Bay	No	No	113	Mfr. Spec	9	No	1,017	☐	☐
AA2	AA2 - High Bay	No	No	113	Mfr. Spec	21	No	2,373	☐	☐

STATE OF CALIFORNIA
Indoor Lighting
NRCC-LTI-E — CALIFORNIA ENERGY COMMISSION

CERTIFICATE OF COMPLIANCE			**NRCC-LTI-E**
Project Name:	Freedom HS Auxiliary Gym	**Report Page:**	**(Page 6 of 8)**
Project Address:	1050 Neroly Rd	**Date Prepared:**	12/17/2020

O. ADDITIONAL LIGHTING ALLOWANCE: TAILORED VERY VALUABLE MERCHANDISE

This section does not apply to this project.

P. POWER ADJUSTMENT: LIGHTING CONTROL CREDIT (POWER ADJUSTMENT FACTOR (PAF))

This section does not apply to this project.

Q. RATED POWER REDUCTION COMPLIANCE FOR ALTERATIONS

This section does not apply to this project.

R. 80% LIGHTING POWER FOR ALL ALTERATIONS - CONTROLS EXCEPTIONS

This section does not apply to this project.

S. DAYLIGHT DESIGN POWER ADJUSTMENT FACTOR (PAF)

This section does not apply to this project.

T. DECLARATION OF REQUIRED CERTIFICATES OF INSTALLATION

Selections have been made based on information provided in this document. If any selection have been changed by permit applicant, an explanation should be included in Table E. Additional Remarks. These documents must be provided to the building inspector during construction and can be found online at https://www.energy.ca.gov/title24/2019standards/2019_compliance_documents/Nonresidential_Documents/NRCI/

Yes	No	Form/Title	Field Inspector Pass	Field Inspector Fail
●	○	NRCI-LTI-01-E - Must be submitted for all buildings	☐	☐
○	●	NRCI-LTI-02-E- Must be submitted for a lighting control system, or for an Energy Management Control System (EMCS), to be recognized for compliance.	☐	☐
○	●	NRCI-LTI-04-E - Must be submitted for two interlocked systems serving an auditorium, a convention center, a conference room, a multipurpose room or a theater to be recognized for compliance.	☐	☐
○	●	NRCI-LTI-05-E- Must be submitted for a Power Adjustment Factor (PAF) to be recognized for compliance.	☐	☐
○	●	NRCI-LTI-06-E- Must be submitted for additional wattage installed in a video conferencing studio to be recognized for compliance.	☐	☐

STATE OF CALIFORNIA
Indoor Lighting
NRCC-LTI-E — CALIFORNIA ENERGY COMMISSION

CERTIFICATE OF COMPLIANCE			**NRCC-LTI-E**
Project Name:	Freedom HS Auxiliary Gym	**Report Page:**	**(Page 3 of 8)**
Project Address:	1050 Neroly Rd	**Date Prepared:**	12/17/2020

F. INDOOR LIGHTING FIXTURE SCHEDULE

AA3	AA3 - High Bay	No	No	71	Mfr. Spec	4	No	284	☐	☐
AB1	AB1 - Linear	No	No	368	Mfr. Spec	1	No	368	☐	☐
AB2	AB2 - Linear	No	No	368	Mfr. Spec	2	No	736	☐	☐
AC1	AC1 - Linear	No	No	92	Mfr. Spec	2	No	184	☐	☐
AD2	AD2 - Striplight	No	No	42	Mfr. Spec	1	No	42	☐	☐
AF1	AF1 - Downlight	No	No	40	Mfr. Spec	3	No	120	☐	☐
AG1	AG1 - Troffer	No	No	24	Mfr. Spec	4	No	96	☐	☐
							Total Designed Watts: CONDITIONED SPACES	5,220		

[1]*FOOTNOTE: Design Watts for small aperture and color changing luminaires which qualify per §140.6(a)4B is adjusted to be 75% of their rated wattage. Table F automatically makes this adjustment, the permit applicant should enter full rated wattage in column 05.*

[2]*Authority Having Jurisdiction may ask for Luminaire cut sheets to confirm wattage used for compliance per §130.0(c) Wattage used must be the maximum rated for the luminaire, not the lamp.*

G. MODULAR LIGHTING SYSTEMS

This section does not apply to this project.

H. INDOOR LIGHTING CONTROLS (Not including PAFs)

*This table includes lighting controls for conditioned and unconditioned spaces. When a control having a * is shown, the notes section of this table provides more detail on how compliance is achieved. The lighting controls section of the Compliance Summary Table on the first page will show "DOES NOT COMPLY" if the notes are left blank.*

Building Level Controls

01	02	03 Field Inspector Pass	03 Field Inspector Fail
Mandatory Demand Response §110.12(c)	Shut-off controls §130.1(c)		
Required > 10,000 SF	Whole Building Auto Time Switch	☐	☐

QUATTROCCHI KWOK ARCHITECTS
Main Office:
636 Fifth Street, Santa Rosa, CA 95404
East Bay:
55 Harrison Street, Suite 525
Oakland, CA 94607
(707) 576-0829

O'MAHONY & MYER
ELECTRICAL ENGINEERS and LIGHTING DESIGN
4340 REDWOOD HWY, SUITE 245
SAN RAFAEL, CALIFORNIA 94903
(415) 492-0420/FAX (415) 479-0662
www.ommconsulting.com

REGISTERED PROFESSIONAL ENGINEER — Pieter Colenbrander No.14738 Exp. 6/21 — ELECTRICAL — STATE OF CALIFORNIA

FREEDOM HIGH SCHOOL

NEW AUXILIARY GYMNASIUM

1050 NEROLY RD,
OAKLEY, CA 94561

LIBERTY UNION HIGH SCHOOL DISTRICT

REVISIONS

DSA APP NO. 01-119278
ARCH PROJECT NO: 1869.00
DRAWN BY: LN,TV,JW,OOM
DRAWING SCALE: AS NOTED
PTN: 61721-78 FILE NO: 7-H4

BID DOCUMENT

APRIL 27, 2021

SHEET TITLE

TITLE 24 COMPLIANCE DOCUMENTS

SHEET NUMBER

E-8.1

FREEDOM HS AUX GYMNASIUM – 220066

CERTIFICATE OF COMPLIANCE			NRCC-LTO-E
Project Name:	Freedom HS Auxiliary Gym	**Report Page:**	**(Page 7 of 7)**
Project Address:	1050 Neroly Rd	**Date Prepared:**	12/17/2020

DOCUMENTATION AUTHOR'S DECLARATION STATEMENT	
I certify that this Certificate of Compliance documentation is accurate and complete.	
Documentation Author Name: Pieter Colenbrander	Documentation Author Signature: P. Colenbrander
Company: O'Mahony & Myer	Signature Date: 2020-12-17
Address: 4340 Redwood Hwy Suite 245	CEA/ HERS Certification Identification (if applicable): 14738
City/State/Zip: San Rafael CA 94903	Phone: 415-492-0420

RESPONSIBLE PERSON'S DECLARATION STATEMENT

I certify the following under penalty of perjury, under the laws of the State of California:

1. The information provided on this Certificate of Compliance is true and correct.
2. I am eligible under Division 3 of the Business and Professions Code to accept responsibility for the building design or system design identified on this Certificate of Compliance (responsible designer)
3. The energy features and performance specifications, materials, components, and manufactured devices for the building design or system design identified on this Certificate of Compliance conform to the requirements of Title 24, Part 1 and Part 6 of the California Code of Regulations.
4. The building design features or system design features identified on this Certificate of Compliance are consistent with the information provided on other applicable compliance documents, worksheets, calculations, plans and specifications submitted to the enforcement agency for approval with this building permit application.
5. I will ensure that a completed signed copy of this Certificate of Compliance shall be made available with the building permit(s) issued for the building, and made available to the enforcement agency for all applicable inspections. I understand that a completed signed copy of this Certificate of Compliance is required to be included with the documentation the builder provides to the building owner at occupancy.

Responsible Designer Name: Pieter Colenbrander	Responsible Designer Signature: P. Colenbrander
Company: O'Mahony & Myer	Date Signed: 2020-12-17
Address: 4340 Redwood Hwy, Suite 245	License: 14738
City/State/Zip: San Rafael CA 94903	Phone: 415-492-0420

CERTIFICATE OF COMPLIANCE			NRCC-LTO-E
Project Name:	Freedom HS Auxiliary Gym	**Report Page:**	**(Page 4 of 7)**
Project Address:	1050 Neroly Rd	**Date Prepared:**	12/17/2020

G. CUTOFF REQUIREMENTS (BUG)

This table includes fixtures of >=6,200 initial lumens indicated on Table F as needing to comply with Cutoff Requirements. Maximum lumens can be found in Title 24, Part 11, Section 5.106.8.

true	02	03	04	05	06	07	08	09	10	11	12	
Name or Item Tag	Complete Luminaire Description	Backlight Rating[2]			Uplight Rating[2]			Glare Rating (Lumens)[2]			Field Inspector	
		Mounting Height[1]	Max Allowable Backlight Rating[3]	Backlight Rating Per Design	Lighting type	Max Allowable Uplight Rating[3]	Uplight Rating Per Design	Mounting Height[1]	Max Allowable Glare Rating[3]	Glare Rating Per Design	Pass	Fail
BD1	BD1-Pole Mount	2 MH from property line	No Limit	B3	All other outdoor lighting, including decorative	U3	U0	2 MH from property line	G3	G2	☐	☐

[1]*FOOTNOTES: Mounting Height is labeled MH in this table.*
[2] *Authority Having Jurisdiction may ask for Luminaire cut sheets or other documentation to confirm luminaire type, uplight ratings and glare ratings used for compliance per §130.2(b)*
[3] *BUG ratings with a lower number than the 'Max Allowable' are compliant. Ex. If Max Allowable is Bug Rating B4, then B0, B1, B2 and B3 are all compliant.*

H. OUTDOOR LIGHTING CONTROLS

This table demonstrates compliance with controls requirements for all new or altered luminaires installed as part of the permit application. For alteration projects, luminaires which are existing to remain (ie untouched) and luminaires which are removed and reinstalled (wiring only) do not need to be included in this table even if they are within the spaces covered by the permit application.
*When an option having a * is selected, the notes section of this table must be completed. The lighting controls section of the Compliance Summary Table on the first page will show "DOES NOT COMPLY" if the notes are left blank.*

Mandatory Controls

01	02	03	04	05	
Area Description	Shut-Off §130.2(c)1	Auto-Schedule §130.2(c)2	Motion Sensor §130.2(c)3	Field Inspector	
				Pass	Fail
Pedestrian	Astronomical Timer	Yes	Yes	☐	☐

** NOTES: Controls with a * require a note in the space below explaining how compliance is achieved.*
EX: Not permitted by health & safety to be turned off; EXCEPTION 1 to §130.2(c)

CERTIFICATE OF COMPLIANCE			NRCC-LTO-E
Project Name:	Freedom HS Auxiliary Gym	**Report Page:**	**(Page 1 of 7)**
Project Address:	1050 Neroly Rd	**Date Prepared:**	12/17/2020

A. GENERAL INFORMATION

01	Project Location (city)	Oakley	04	Total Illuminated Hardscape Area (ft^2)	23324
02	Climate Zone	12			
03	Outdoor Lighting Zone per Title 24 Part 1 §10.114 or as designated by Authority Having Jurisdiction (AHJ):				
☐	LZ-0: Very Low - Undeveloped Parkland	☐	LZ-2: Moderate - Rural Areas	☐	LZ-4: High - Must be reviewed by CA Energy Commission for Approval
☐	LZ-1: Low - Developed Parkland	☒	LZ-3: Moderately High - Urban Areas		

B. PROJECT SCOPE

This table includes outdoor lighting systems that are within the scope of the permit application and are demonstrating compliance using the prescriptive path outlined in §140.7 or §141.0(b)2L for alterations.

My Project Consists of:

01	02	
☒ New Lighting System	Must Comply with Allowances from §140.7	
☐ Altered Lighting System	Is your alteration increasing the connected lighting load (Watts)?	○ Yes ○ No
03	04	05
% of Existing Luminaires Being Altered[1]	Sum Total of Luminaires Being Added or Altered	Calculation Method
☐ < 10% ☐ >= 10% and < 50% ☐ >= 50%		

Please proceed to Table F. Outdoor Lighting Fixture Schedule to define the project's luminaires.

[1] FOOTNOTES: % of Existing Luminaires Being Altered = (Sum Total of Luminaires Being Added or Altered / Existing Luminaires within the Scope of the Permit Application) x 100.

CERTIFICATE OF COMPLIANCE			NRCC-LTO-E
Project Name:	Freedom HS Auxiliary Gym	**Report Page:**	**(Page 5 of 7)**
Project Address:	1050 Neroly Rd	**Date Prepared:**	12/17/2020

I. LIGHTING POWER ALLOWANCE (per §140.7)

	01				
This table includes areas using allowance calculations per §140.7. General Hardscape Allowance is per Table 140.7-A while "Use it or lose it" Allowances are per Table 140.7-B . Indicate which allowances are being used to expand sections for user input. Luminaires that qualify for one of the "Use it or lose it" allowances shall not qualify for another "Use it or lose it" allowance.	☒ General Hardscape Allowance Table I (below)	"Use it or lose it" Allowance (select all that apply) (select all that apply)			
		☐ Per Application Table J	☐ Sales Frontage Table K	☐ Ornamental Table L	☐ Per Specific Area Table M

Calculated General Hardscape Lighting Power Allowance per Table 140.7-A (LZ 0, 1 & 4)

This section does not apply to this project.

Calculated General Hardscape Lighting Power Allowance per Table 140.7-A (LZ 2 & 3)

02	03	04	05	06	07	08	9	10
Area Description	Surface Type	Area Wattage Allowance (AWA)			Area Wattage Allowance (AWA)			Total General AWA + LWA (Watts)
		Illuminated Area (ft^2)	Allowed Density (W/ft^2)	Area Allowance (Watts)	Perimeter Length (lf)	Allowed Density (W/lf)	Linear Allowance (Watts)	
Pedestrian	Concrete	23324	0.03	699.72	1544	0.4	617.6	1317.32
							Initial Wattage Allowance for Entire Site (Watts):	350
							Total General Hardscape Allowance (Watts):	1667.32

J. LIGHTING ALLOWANCE: PER APPLICATION

This section does not apply to this project.

K. LIGHTING ALLOWANCE: SALES FRONTAGE

This section does not apply to this project.

L. LIGHTING ALLOWANCE: ORNAMENTAL

This section does not apply to this project.

M. LIGHTING ALLOWANCE: PER SPECIFIC AREA

This section does not apply to this project.

CERTIFICATE OF COMPLIANCE			NRCC-LTO-E
Project Name:	Freedom HS Auxiliary Gym	**Report Page:**	**(Page 2 of 7)**
Project Address:	1050 Neroly Rd	**Date Prepared:**	12/17/2020

C. COMPLIANCE RESULTS

Results in this table are automatically calculated from data input and calculations in Tables F through I. Note: If any cell on this table says "COMPLIES with Exceptional Conditions" refer to Table D. Exceptional Conditions for guidance or see applicable Table referenced below.

Calculations of Total Allowed Lighting Power (Watts) §140.7 or §141.0(b)2L													Compliance Results			
01		02		03		04		05		06		07		08	09
General Hardscape Allowance §140.7(d)1 (See Table I)	+	Per Application §140.7(d)2 (See Table J)	+	Sales Frontage §140.7(d)2 (See Table K)	+	Ornamental §140.7(d)2 (See Table L)	+	Per Specific Area §140.7(d)2 (See Table M)	OR	Existing Power Allowance §141.0(b)2L (See Table N)	=	**Total Allowed** (Watts)	≥	**Total Actual** (Watts)	**07 must be >= 08**
1,667.32	+	---	+	---	+	---	+	---	OR	---	=	1,667.32	≥	1,195	COMPLIES

Cutoff Compliance (See Table G for Details)	COMPLIES
Controls Compliance (See Table H for Details)	COMPLIES

D. EXCEPTIONAL CONDITIONS

This table is auto-filled with uneditable comments because of selections made or data entered in tables throughout the form.

E. ADDITIONAL REMARKS

This table includes remarks made by the permit applicant to the Authority Having Jurisdiction.

CERTIFICATE OF COMPLIANCE			NRCC-LTO-E
Project Name:	Freedom HS Auxiliary Gym	**Report Page:**	**(Page 6 of 7)**
Project Address:	1050 Neroly Rd	**Date Prepared:**	12/17/2020

N. EXISTING CONDITIONS POWER ALLOWANCE (alterations only)

This section does not apply to this project.

O. DECLARATION OF REQUIRED CERTIFICATES OF INSTALLATION

Selections have been made based on information provided in this document. If any selection have been changed by permit applicant, an explanation should be included in Table E. Additional Remarks. These documents must be provided to the building inspector during construction and can be found online at https://www.energy.ca.gov/title24/2019standards/2019_compliance_documents/Nonresidential_Documents/NRCI/

Yes	No	Form/Title	Field Inspector	
			Pass	Fail
●	○	NRCI-LTO-01-E - Must be submitted for all buildings	☐	☐
●	○	NRCI-LTO-02-E- Must be submitted for a lighting control system, or for an Energy Management Control System (EMCS), to be recognized for compliance.	☐	☐

P. DECLARATION OF REQUIRED CERTIFICATES OF ACCEPTANCE

Selections have been made based on information provided in this document. If any selection have been changed by permit applicant, an explanation should be included in Table E. Additional Remarks. These documents must be provided to the building inspector during construction and must be completed through an Acceptance Test Technician Certification Provider (ATTCP). For more information visit: http://www.energy.ca.gov/title24/attcp/providers.html

Yes	No	Form/Title	Field Inspector	
			Pass	Fail
●	○	NRCA-LTO-02-A - Must be submitted for all outdoor lighting controls except for alterations where controls are added to <= 20 luminaires.	☐	☐

CERTIFICATE OF COMPLIANCE			NRCC-LTO-E
Project Name:	Freedom HS Auxiliary Gym	**Report Page:**	**(Page 3 of 7)**
Project Address:	1050 Neroly Rd	**Date Prepared:**	12/17/2020

F. OUTDOOR LIGHTING FIXTURE SCHEDULE

For new or altered lighting systems demonstrating compliance with §140.7 all new luminaires being installed and any existing luminaires remaining or being moved within the spaces covered by the permit application are included in the Table below. For altered lighting systems using the Existing Power method per §141.0(b)2L only new luminaires being installed and replacement luminaires being installed as part of the project scope are included (ie, existing luminaires remaining or existing luminaires being moved are not included).

Designed Wattage:

01	02		03	04	05	06	07	08	09	10	
Name or Item Tag	Complete Luminaire Description		Watts per luminaire[1, 2]	How is Wattage determined	Total number luminaires [2]	Luminaire Status[3]	Excluded per §140.7(a)	Design Watts	Cutoff Req. > 6,200 initial lumen output §130.2(b) [4]	Field Inspector	
										Pass	Fail
BA1	BA1 - Exterior Sconce	☐ Linear	25	Mfr. Spec	4	New	☐	100	NA: < 6200 lumens	☐	☐
BB1	BB1 - Exterior Sconce	☐ Linear	35	Mfr. Spec	2	New	☐	70	NA: < 6200 lumens	☐	☐
BC1	BC1 - Exterior Sconce	☐ Linear	50	Mfr. Spec	8	New	☐	400	NA: < 6200 lumens	☐	☐
BC2	BC2 - Exterior Sconce	☐ Linear	25	Mfr. Spec	2	New	☐	50	NA: < 6200 lumens	☐	☐
BC3	BC3 - Exterior Sconce	☐ Linear	25	Mfr. Spec	5	New	☐	125	NA: < 6200 lumens	☐	☐
BD1	BD1-Pole Mount	☐ Linear	75	Mfr. Spec	6	New	☐	450	Yes	☐	☐
							Total Design Watts:	1195			

** NOTES: Selections with a * require a note in the space below explaining how compliance is achieved.*
EX: Luminaire is lighting a statue; EXCEPTION 2 to §130.2(b)

[1]*FOOTNOTES: Authority Having Jurisdiction may ask for Luminaire cut sheets to confirm wattage used for compliance per §130.0(c)*
[2] *For linear luminaires, wattage should be indicated as W/lf instead of Watts/luminaire. Total linear feet should be indicated in column 05 instead of number of luminaires.*
[3] *Select "New" for new luminaires in a new outdoor lighting project, or for added luminaires in an alteration. Select "Altered" for replacement luminaires in an alteration. Select "Existing to Remain" for existing luminaires within the project scope that are not being altered and are remaining. Select "Existing Reinstalled" for existing luminaires which are being removed and reinstalled as part of the project scope.*
[4] *Compliance with mandatory cutoff requirements is required for luminaires with initial lumen output >= 6,200 unless exempted by §130.2(b)*

QUATTROCCHI KWOK ARCHITECTS
Main Office:
636 Fifth Street, Santa Rosa, CA 95404
East Bay:
55 Harrison Street, Suite 525
Oakland, CA 94607
(707) 576-0829

O'MAHONY & MYER
ELECTRICAL ENGINEERING and LIGHTING DESIGN
4340 REDWOOD HWY, SUITE 245
SAN RAFAEL, CALIFORNIA 94903
(415) 492-0420/FAX (415) 479-9662
www.ommconsulting.com

REGISTERED PROFESSIONAL ENGINEER
PIETER J. COLENBRANDER
No.14738
Exp. 6/21
ELECTRICAL
STATE OF CALIFORNIA

FREEDOM HIGH SCHOOL

NEW AUXILIARY GYMNASIUM

1050 NEROLY RD,
OAKLEY, CA 94561

LIBERTY UNION HIGH SCHOOL DISTRICT

REVISIONS

DSA APP NO. 01-119278

ARCH PROJECT NO:	1869.00
DRAWN BY:	LN,TV,JW,OOM
DRAWING SCALE:	AS NOTED
PTN: 61721-78	FILE NO: 7-H4

BID DOCUMENT

APRIL 27, 2021

SHEET TITLE

TITLE 24 COMPLIANCE DOCUMENTS

SHEET NUMBER

E-8.2

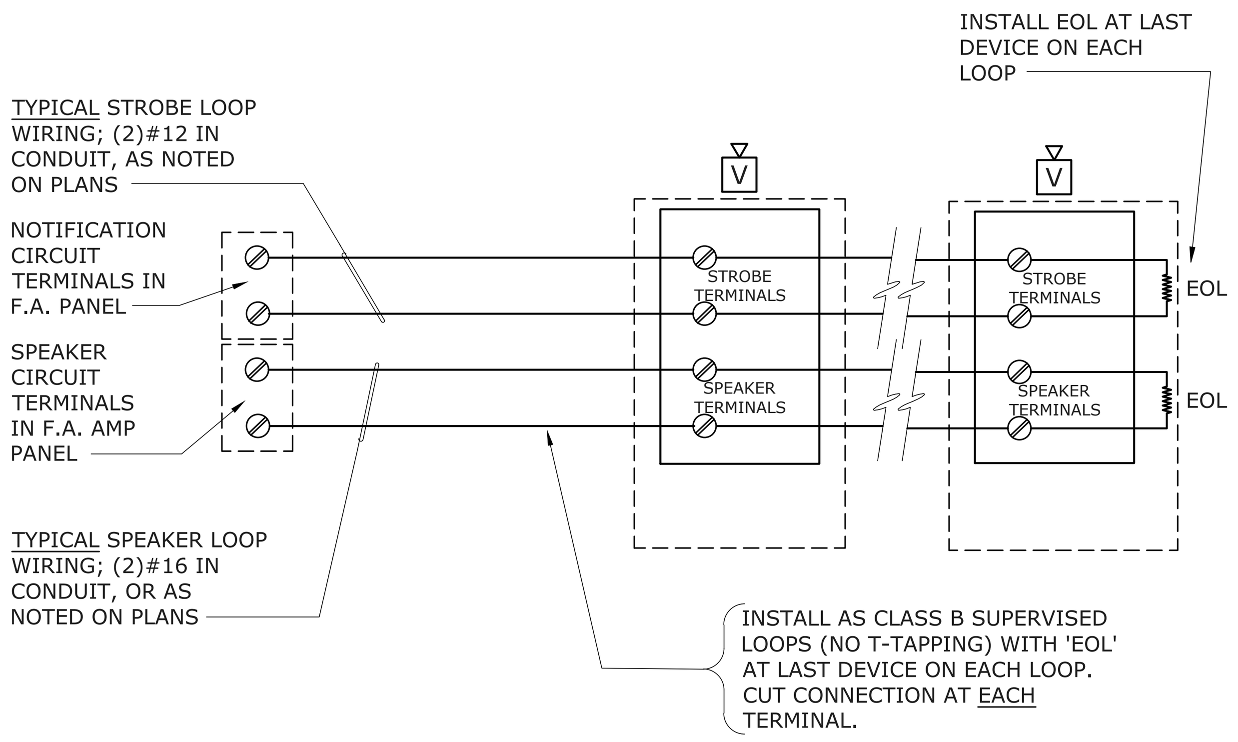

TYPICAL NOTIFICATION / SPEAKER CIRCUIT WIRING

SCALE: NONE
FILE: L:\DETAILS\POWER\FIREALRM\PFIRE012A

1

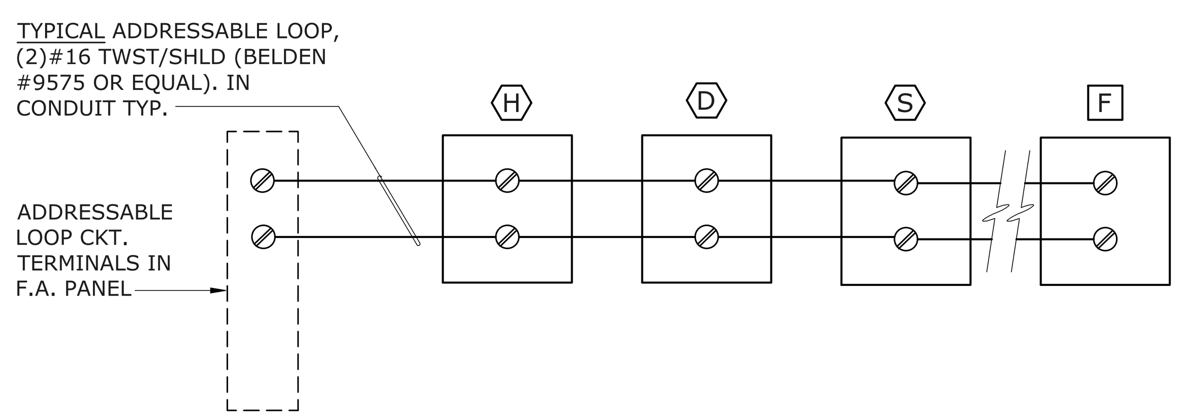

NOTE:

1. T-TAPPING ALLOWED ON ADDRESSABLE LOOPS. NO `EOL' DEVICES REQUIRED. MAXIMUM TOTAL LENGTH OF 3,000 FEET.
2. PROPERLY TERMINATE SHIELDS AND DRAINS AS PER SYSTEM SUPPLIERS RECOMMENDED INSTRUCTIONS.

TYPICAL ADDRESSABLE INITIATION LOOP WIRING

SCALE: NONE
FILE: L:\DETAILS\POWER\FIREALRM\PFIRE013

2

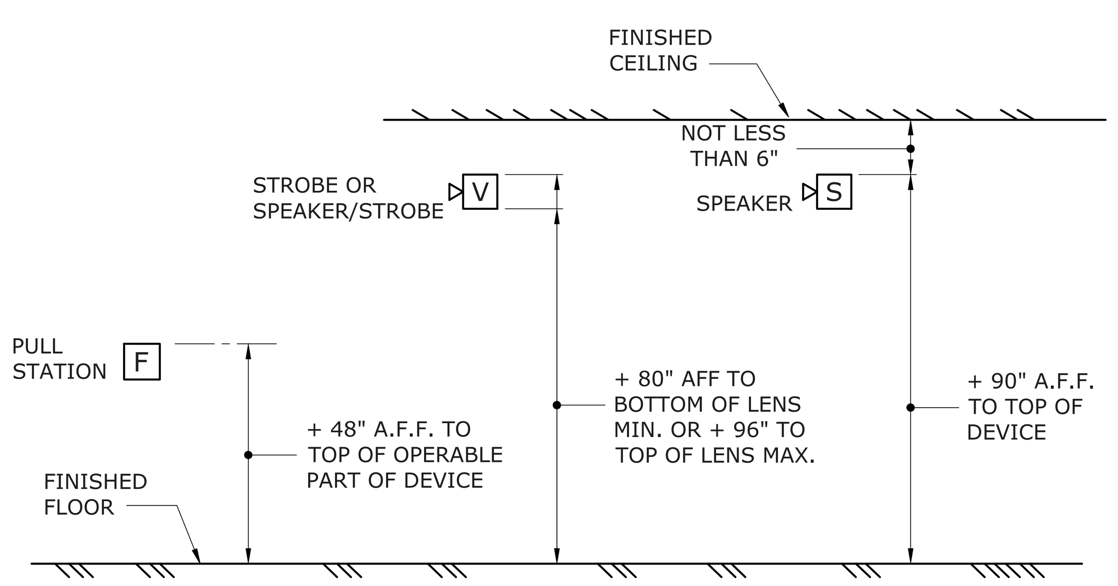

FIRE ALARM DEVICE MOUNTING HEIGHT DETAIL

SCALE: NOT TO SCALE
FILE: L:\DETAILS\POWER\FIREALRM\PFIRE002 MOD.

3

FIRE ALARM WIRING LEGEND

TAG	DESCRIPTION	CABLING
A	INITIATION CIRCUIT	(2) #16 TWISTED/UNSHIELDED
B	STROBE NOTIFICATION CIRCUIT(S)	(2) #12 THHN/THWN
C	SPEAKER NOTIFICATION CIRCUIT(S)	(2) #16 TWISTED/SHIELDED
D	SPEAKER NOTIFICATION CIRCUIT - SITE DIST.	(2) #14 TWISTED/SHIELDED
E	TRANSPONDER NETWORKING	(2) #16 TWISTED/SHIELDED + (2) #14 THHN/THWN
F	BEAM DET. CONTROL WIRING	(1) #14 2-CORE SHIELDED CABLE
G	CONSTANT 24V SUPPLY	(2) #14 THHN/THWN

NOTE:
CONTRACTOR SHALL VERIFY EXACT CABLE/WIRE TYPES WITH SYSTEM MANUFACTURER PRIOR TO ROUGH-IN.

GENERAL FIRE ALARM NOTES

1. FINAL FIRE ALARM TEST SHALL BE MADE WITH THE DSA INSPECTOR OF RECORD (IOR). LOCAL FIRE AUTHORITY SHALL BE NOTIFIED OF DATE AND TIME OF FINAL ALARM TESTING AND SHALL ASSIST/WITNESS SUCH TESTING WHEN ABLE. DSA/ARCHITECT/ENGINEER AND OWNER SHALL BE NOTIFIED A MINIMUM OF (48) HOURS PRIOR TO THE FINAL INSPECTION AND/OR TESTING.
2. FIRE ALARM CONTRACTOR SHALL PROVIDE SYSTEM PROGRAMMING FOR SUPERVISORY MONITORING PER CBC SECTION 901.6.2. MONITORING SHALL BE TESTED AND VERIFIED AS SENDING THE CORRECT SIGNALS IN CONJUNCTION WITH FINAL ACCEPTANCE TEST. OWNER SHALL BE RESPONSIBLE FOR ESTABLISHING A FIRE SYSTEM MONITORING CONTRACT AND/OR PROVISIONS
3. UNDERGROUND AND EXTERIOR CONDUITS SHALL HAVE WATERTIGHT FITTINGS.
4. FIRE ALARM DEVICE MOUNTING HEIGHTS:

   PULL STATION: 48" TO TOP OF OPERATOR ABOVE FINISHED FLOOR.

   HORN INTERIOR: 90" MIN. TO TOP OF DEVICE ABOVE FINISHED FLOOR, OR 100" MAX TO TOP OF DEVICE, BUT NOT LESS THAN 6" FROM CEILING.

   WALL MOUNTED STROBE OR HORN/STROBE: BETWEEN 80" TO BOTTOM OF DEVICE LENS TO +96" TO TOP OF DEVICE LENS ABOVE FINISH FLOOR, BUT NOT LESS THAN 6" FROM CEILING.
5. AUDIBLE FIRE ALARM SYSTEM LEVEL SHALL BE AT LEAST 15dBA ABOVE THE AVERAGE AMBIENT SOUND LEVEL IN ALL OCCUPIABLE AREAS, OR 5 dBA ABOVE THE MAXIMUM SOUND LEVEL HAVING A DURATION OF AT LEAST 60 SECONDS, WHICHEVER IS GREATER, MEASURED AT 5 FEET ABOVE THE FLOOR. AUDIBLE SIGNALS SHALL NOT BE LESS THAN 75dBA AT 10 FEET, OR MORE THAN 110dBA AT THE MINIMUM HEARING DISTANCE.
6. AUDIBLE DEVICES SHALL BE SYNCHRONIZED TEMPORAL THREE DISTINCTIVE FIRE ALARM SOUND PER NFPA 72.
7. APPLICABLE CODES:
   a. CBC 2019; CEC 2016; CMC 2016; CFC 2016.
   b. STATE FIRE MARSHAL TITLE 19, PUBLIC SAFETY.
   c. NFPA 72, 2016 EDITION W/CA AMENDMENTS, FIRE ALARM CODE.
8. STROBES SHALL FLASH AT A RATE NOT EXCEEDING TWO FLASHES PER SECOND, AND NOT LESS THAN ONE FLASH EVERY SECOND. THE DEVICE SHALL HAVE A PULSING LIGHT SOURCE NOT LESS THAN 15 CANDELA. VISUAL DEVICES WITHIN 55 FEET OF EACH OTHER SHALL BE SYNCHRONIZED.
9. FIRE ALARM CONTRACTOR SHALL PROVIDE A COPY OF NFPA 72 SYSTEM RECORD OF COMPLETION, SYSTEM RECORD OF INSPECTION AND TESTING, AND THE "EMERGENCY COMMUNICATIONS SUPPLEMENTARY RECORD OF COMPLETION", TO THE INSPECTOR OF RECORD IOR/DSA, SCHOOL DISTRICT, ARCHITECT AND LOCAL FIRE AUTHORITY.
10. POWER SERVICE TO THE FACP, REMOTE POWER SUPPLIES, AND CENTRAL STATION AUTO DIALER SHALL BE ON A DEDICATED BRANCH CIRCUIT WITH A RED MARKING AND IDENTIFIED AS "FIRE ALARM CIRCUIT CONTROL".
11. INSTALL ALL WIRING IN CONDUIT, MIN. 3/4" CONDUIT. ALL FIRE ALARM SYSTEM WIRING SHALL BE FPL (FIRE POWER LIMITED) OR FPLP (FIRE POWER LIMITED PLENUM RATED) AS REQUIRED FOR APPLICATION. WIRING IN CONDUIT ABOVE GROUND MAY BE THHN OR THWN.
12. CONDUIT AND WIRING SHALL BE PER MANUFACTURERS REQUIREMENTS.
13. ALL FIRE ALARM COMPONENTS SHALL BE SECURED TO MOUNTING SURFACES PER MANUFACTURERS SPECIFICATIONS. NO SINGLE DEVICES/EQPT. SHALL EXCEED 20LBS. WITHOUT SPECIAL MOUNTING DETAILS.
14. INSTALLATION OF SYSTEM SHALL NOT BE STARTED UNTIL COMPLETE SET OF CONSTRUCTION DOCUMENTS (WITH DEVICE TYPES AND LISTINGS) HAVE BEEN REVIEWED AND APPROVED BY DSA.
15. A STAMPED SET OF APPROVED PLANS SHALL BE ON THE JOB SITE AT ALL TIMES AND SHALL BE USED FOR INSTALLATION.
16. ANY DISCREPANCIES BETWEEN THE CONTRACT DOCUMENTS AND CODE OR RECOGNIZED STANDARDS SHALL BE BROUGHT TO THE ATTENTION OF DSA AND ARCHITECT/ENGINEER OF RECORD.
17. THE CONTRACTOR SHALL INSTALL AND ADJUST ALL DEVICES TO MAXIMIZE PERFORMANCE AND TO MINIMIZE FALSE ALARMS.
18. SMOKE DETECTORS SHALL NOT BE ANY CLOSER THAN 1 FOOT FROM FIRE SPRINKLER HEADS OR 3 FEET FROM ANY SUPPLY DIFFUSER. IN AREAS OF CONSTRUCTION OR POSSIBLE DAMAGE /CONTAMINATION, INSTALLED DEVICES SHALL BE COVERED UNTIL AREA IS READY TO BE TURNED OVER TO THE OWNER.
19. PER CEC STANDARDS, ALL WIRING IS TO BE PULLED THROUGH EACH JUNCTION BOX AND CONNECTED DIRECTLY TO EACH FIRE ALARM DEVICE. DO NOT SPLICE WIRE. THERE MUST BE AT LEAST 6" OF WIRE LEAD FROM THE BOX TO THE DEVICE. ALL BOXES TO BE SIZED PER CEC FOR PROPER VOLUME WITH INSTALLED WIRING AND DEVICES.
20. SUPERVISING STATION: AUTOMATIC FIRE ALARM SYSTEMS SHALL TRANSMIT THE ALARM, SUPERVISORY AND TROUBLE SIGNALS TO AN APPROVED SUPERVISING STATION AS REQUIRED BY NFPA 72, AS AMENDED BY CFC CHAPTER 80. THE SUPERVISION STATION SHALL BE LISTED AS EITHER UUFX OR UUJS BY UNDERWRITERS LABORATORY OR SHALL MEET THE REQUIREMENTS OF FACTORY MUTUAL RESEARCH APPROVAL STANDARD 3011.
21. A DOCUMENTATION CABINET SHALL BE INSTALLED ADJACENT TO THE FACP IN THE MAIN ELECTRICAL ROOM (NFPA 72, 7.7.2.1). SPACE AGE ELECTRONICS INC, ACERBOX FAD SERIES (#SSU00685 OR EQUAL).
22. ALL RECORD DOCUMENTATION SHALL BE STORED IN THE DOCUMENTATION CABINET (NFPA 72, 7.7.2.3): PROVIDE NAMEPLATE "FIRE ALARM SYSTEM RECORD DOCUMENTS" (NFPA 72, 7.7.2.5).
23. FIRE ALARM MANUAL PULLSTATIONS SHALL MEET THE CALIFORNIA ACCESSIBILITY REQUIREMENTS OUTLINED IN THE CBC ("CONTROLS AND OPERATING MECHANISMS SHALL BE OPERABLE WITH ONE HAND AND NOT REQUIRE TIGHT GRASPING, PINCHING OR TWISTING OF THE WRIST. THE FORCE TO ACTIVATE THE CONTROLS SHALL BE NO GREATER THAN 5 POUNDS OF FORCE". REFER TO DSA ACCESSIBILITY STAFF FOR QUESTIONS OR CLARIFICATION.)

FIRE ALARM EQUIPMENT LIST

SYMBOL	DESCRIPTION	MANUFACTURER & MODEL NUMBER	CSFM LISTING NUMBER	STANDBY CURRENT	ALARM CURRENT
FAEVP	(E) FIRE ALARM VOICE EVAC CONTROL PANEL WITH DIGITAL AUDIO CONTROLLER, AMPLIFIER & MICROPHONE	SIMPLEX 4100ES	7165-0026:0251	373mA 200mA	470mA 250mA
FAEP	FIRE ALARM MINIPLEX TRANSPONDER	SIMPLEX 4100-9600	7165-0026:0251	87mA	87mA
M	ADDRESSABLE MONITOR MODULE W/ EOLR	SIMPLEX 4090-9001	7300-0026:0223	-	5.10mA
R	ADDRESSABLE RELAY MODULE	SIMPLEX 4090-9002	7300-0026:0223	-	-
S	ADDRESSABLE PHOTOELECTRIC SMOKE DETECTOR	SIMPLEX 4098-9714	7272-0026:0218	0.40mA	1mA
CO	ADDRESSABLE CARBON MONOXIDE DETECTOR BASE	SIMPLEX 4098-9771	7300-0026:0330	1mA	17mA
-	DETECTOR BASE	SIMPLEX 4098-9792	7300-0026:0217	-	-
B	PROJECTED BEAM DETECTOR TRANSMITTER/RECEIVER WITH ADDRESSABLE SYSTEM CONTROLLER	SIEMENS F5000	7260-1508:0104	8.50mA	8.50mA
B	PROJECTED BEAM SMOKE DETECOTR - REFLECTOR	(UNIT INCLUDED WITH TRANSMITTER/RECEIVER)	-	-	-
S	VISUAL STROBE, WALL MOUNT, SELECTABLE CANDELA UL 1971 PUBLIC MODE NOTIFICATION	SIMPLEX 4906-9103	7125-0026:0316	-	-
			15cd	0mA	53mA
			30cd	0mA	84mA
			75cd	0mA	165mA
			110cd	0mA	224mA
V	COMBINATION VISUAL STROBE AND SPEAKER, WALL MOUNT, SELECTABLE CANDELA UL 1971 PUBLIC MODE NOTIFICATION, VISUAL DEVICE	SIMPLEX 4906-9153 (1/2 WATT TAP)	7320-0026:0247	-	-
			STROBE CKT: 15cd	0mA	53mA
			STROBE CKT: 30cd	0mA	84mA
			STROBE CKT: 75cd	0mA	165mA
			STROBE CKT: 110cd	0mA	224mA
S	EXTERIOR AUDIBLE SPEAKER WITH WEATHER-PROOF BACKBOX	WHEELOCK #ET-1010R (1W TAP)	7320-0785:0105	0mA	7mA

NOTE:

DETECTOR SUBSCRIPTS:

"c" - DETECTOR IN ACCESSIBLE CEILING SPACE

"p" - DETECTOR WITHIN 36" OF PEAK

FIRE ALARM SYSTEM DESCRIPTION

1. THE FIRE ALARM SYSTEM SHALL BE AN AUTOMATIC ADDRESSABLE SYSTEM WITH STYLE 4, CLASS B WIRING FOR NAC'S AND SLC'S TO MATCH EXISTING.
2. CIRCUIT PATHWAY SURVIVABILITY SHALL BE LEVEL 1.
3. PROVIDE AND INSTALL NEW EQUIPMENT, DEVICES AND REQUIRED MODULES FULLY COMPATIBLE WITH (E) FACP AND PROVIDE CONNECTIONS COMPLETE FOR A FULLY FUNCTIONING NETWORKED FIRE ALARM SYSTEM.
4. THE NEW FIRE ALARM SYSTEM INCLUDES EMERGENCY VOICE / ALARM COMMUNICATION REQUIREMENTS.
5. THE NAME OF THE SPECIFIC PERSON RESPONSIBLE FOR THE SYSTEM DESIGN IS "CHRIS LIPPINCOTT" (O'MAHONY & MYER).
6. SYSTEM INSTALLATION SHALL BE BY A LICENSED ELECTRICAL OR FIRE ALARM CONTRACTOR WITH A CALIFORNIA C-10 LICENSE, REGULARLY ENGAGED IN THE INSTALLATION AND COMMISSIONING OF FIRE ALARM SYSTEMS TO NFPA 72 STANDARDS. INSTALLING CONTRACTOR'S NAME AND CONTACT INFORMATION SHALL BE LISTED IN THE NFPA CLOSE OUT DOCUMENTATION AT COMPLETION OF PROJECT.

FIRE ALARM SCOPE OF WORK

1. TERMINATE EACH NOTIFICATION LOOP TO THE FAEP OR RAMP AS SHOWN ON PLANS AND RISER DIAGRAM.
2. TERMINATE EACH INITIATION LOOP AT THE FAEP AS SHOWN ON PLANS AND RISER DIAGRAM.
3. IDENTIFY FIRE ALARM CIRCUITS AT TERMINAL AND JUNCTION LOCATIONS TO PREVENT INTERFERENCE WITH THE FIRE ALARM SYSTEM WHEN OTHER ADJACENT SYSTEMS ARE BEING TESTED OR SERVICED.
4. PROVIDE A COMPLETE NETWORK FIRE ALARM SYSTEM, INCLUDING REMOTE POWER SUPPLY TERMINAL CABINETS, EXPANDER PANELS, OUTLETS, DEVICES AND WIRING FOR THE FACILITY AS SHOWN.
5. FINAL SYSTEM PROGRAMMING SHALL BE DONE BASED ON ACTUAL PHYSICAL ROOM NAMES AND NUMBERS USED AT THE SITE (IF DIFFERENT FROM THE ROOM NAMES OR NUMBERS SHOWN ON THE APPROVED PLANS).

SEQUENCE OF OPERATION

1. MANUAL PULL STATION - WHEN A PULL STATION IS PULLED, IT SHALL ANNUNCIATE AN ALARM AT THE FACP. ALARM SHALL ACTIVATE ALL AUDIO AND VISUAL DEVICES THROUGHOUT THE CAMPUS.
2. SMOKE AND HEAT DETECTORS - WHEN A SMOKE OR HEAT DETECTOR IS ACTIVATED, IT SHALL ANNUNCIATE AN ALARM AT THE FACP. ALARM SHALL ACTIVATE ALL AUDIO AND VISUAL DEVICES THROUGHOUT THE CAMPUS.
3. ANY BUILDING POWER FAILURE- IF THE BUILDING LOSES POWER, THE FAILURE SHALL SHOW UP AS A TROUBLE SIGNAL ON THE FACP. THE SYSTEM SHALL STAY ACTIVE ON BATTERY BACK-UP POWER IN ACCORDANCE WITH THE STATE FIRE CODE.
4. SYSTEM SHALL INDICATE TROUBLE ALARMS FOR ALL SYSTEM FAULTS (i.e. GROUND FAULTS, SHORTS, OPEN CIRCUITS, BATTERY DISCONNECT, ETC.).
5. FIRE SPRINKLER SYSTEM - WHEN A FLOW SWITCH IS ACTIVATED, IT SHALL ANNUNCIATE AN ALARM AT THE MAIN FACP. ALARM SHALL ACTIVATE ALL AUDIO AND VISUAL DEVICES THROUGHOUT THE CAMPUS. WHEN TAMPER SWITCH IS ACTIVATED, IT SHALL ANNUNCIATE A SUPERVISORY ALARM AT THE MAIN FACP.
6. UPON ALARM CONDITION, AUTO DIALER TO NOTIFY THE SUPERVISING STATION, AND AUTHORIZED SCHOOL PERSONNEL TO NOTIFY THE FIRE DEPARTMENT AND INITIATE EVACUATION OF STUDENTS AND FACULTY AS PER THE SCHOOL'S EVACUATION PLAN.
7. UPON TROUBLE CONDITION, AUTO DIALER TO NOTIFY THE SUPERVISING STATION, AND AUTHORIZED SCHOOL PERSONNEL TO NOTIFY AUTHORIZED TECHNICIAN TO CORRECT THE TROUBLE CONDITION.
8. UPON CO DETECTION, IT SHALL ANNUNCIATE AN ALARM AT THE FACP AND REMOTE ANNUNCIATOR ONLY AND SHALL ACTIVATE THE CO DETECTOR SOUNDER BASE WITH TEMPORAL 4 FORM IN THE CLASSROOM. SCHOOL PERSONNEL TO NOTIFY THE OCCUPANTS IMMEDIATELY AND INITIATE EVACUATION OF STUDENTS & FACULTY.

QUATTROCCHI KWOK ARCHITECTS
Main Office:
636 Fifth Street, Santa Rosa, CA 95404
East Bay:
55 Harrison Street, Suite 525
Oakland, CA 94607
(707) 576-0829

O'MAHONY & MYER
ELECTRICAL ENGINEERING and LIGHTING DESIGN
4340 REDWOOD HWY, SUITE 245
SAN RAFAEL, CALIFORNIA 94903
(415) 492-0420/FAX (415) 479-9662
www.ommconsulting.com

REGISTERED PROFESSIONAL ENGINEER
PIERRE J. COLENDANDER
No.14738
Exp. 6/21
ELECTRICAL
STATE OF CALIFORNIA

FREEDOM HIGH SCHOOL

NEW AUXILIARY GYMNASIUM

1050 NEROLY RD,
OAKLEY, CA 94561

LIBERTY UNION HIGH SCHOOL DISTRICT

REVISIONS

DSA APP NO. 01-119278

ARCH PROJECT NO: 1869.00
DRAWN BY: LN,TV,JW,LJ/OM
DRAWING SCALE: AS NOTED
PTN: 61721-78 FILE NO: 7-H4

BID DOCUMENT

APRIL 27, 2021

SHEET TITLE

FIRE ALARM EQUIPMENT LIST, NOTES & DETAILS

SHEET NUMBER

FE-0.1

FREEDOM HS AUX GYMNASIUM - 220066

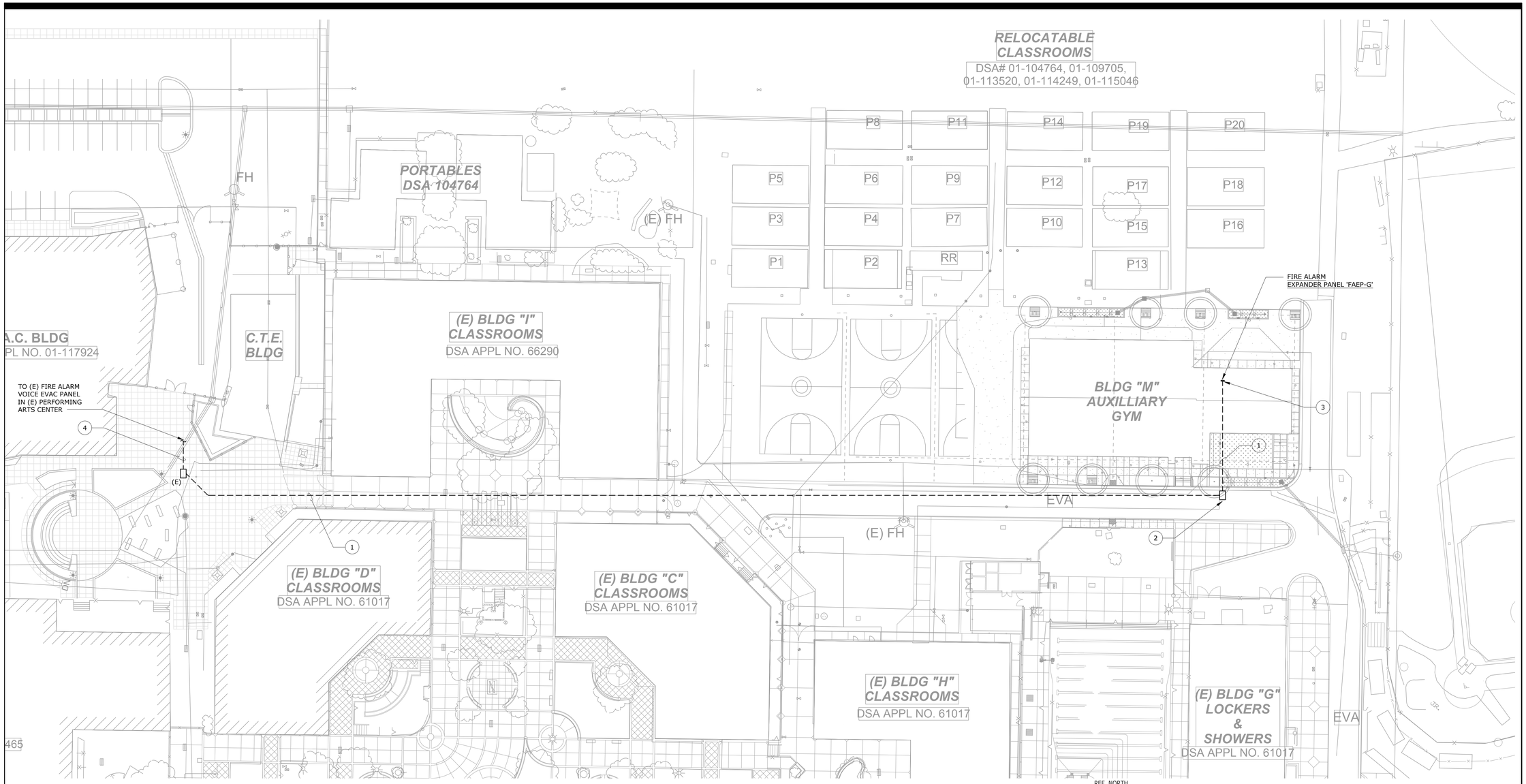

SITE PLAN - FIRE ALARM

SCALE: 1" = 20'-0"

1 FE-1.1

NUMBERED SHEET NOTES

1. PROVIDE AND INSTALL 3" UNDERGROUND SCHEDULE 40 PVC RACEWAY. SEE 8/E-7.1.
2. PROVIDE AND INSTALL FLUSH, IN-GRADE PULLBOX, CHRISTY (OR EQUAL), WITH COVER LABLED "FIRE ALARM". PULLBOX SHALL BE "TRAFFIC RATED" REINRFORCED CONCRETE WITH STEEL FRAME AND STEEL COVER. SIZE PULLBOX PER NEC. SEE 2/E-7.2.
3. STUB FIRE ALARM RACEWAY UP IN STORAGE 110 AND CONNECT COMPLETE TO FIRE ALARM PANEL.
4. UTILIZE (E) UNDERGROUND FIRE ALARM RACEWAY TO CONNECT (N) AUXILIARY GYM FAEP TO (E) FIRE ALARM VOICE EVAC PANEL IN (E) PERFORMING ARTS CENTER BUILDING.

QUATTROCCHI KWOK ARCHITECTS
Main Office:
636 Fifth Street, Santa Rosa, CA 95404
East Bay:
55 Harrison Street, Suite 525
Oakland, CA 94607
(707) 576-0829

O'MAHONY & MYER
ELECTRICAL ENGINEERS and LIGHTING DESIGN
430 REDWOOD HWY, SUITE 245
SAN RAFAEL, CALIFORNIA 94903
(415) 492-0420/FAX (415) 479-9662
www.ommconsulting.com

REGISTERED PROFESSIONAL ENGINEER
P. COLEMAN
No.14738
Exp. 6/21
ELECTRICAL
STATE OF CALIFORNIA

FREEDOM HIGH SCHOOL

NEW AUXILIARY GYMNASIUM

1050 NEROLY RD,
OAKLEY, CA 94561

LIBERTY UNION HIGH SCHOOL DISTRICT

REVISIONS

DSA APP NO. 01-119278

ARCH PROJECT NO:	1869.00
DRAWN BY:	LN,TV,JW,OOM
DRAWING SCALE:	AS NOTED
PTN: 61721-78	FILE NO. 7-H4

BID DOCUMENT

APRIL 27, 2021

SHEET TITLE

SITE PLAN - FIRE ALARM

SHEET NUMBER

FE-1.1

FREEDOM HS AUX GYMNASIUM - 220066

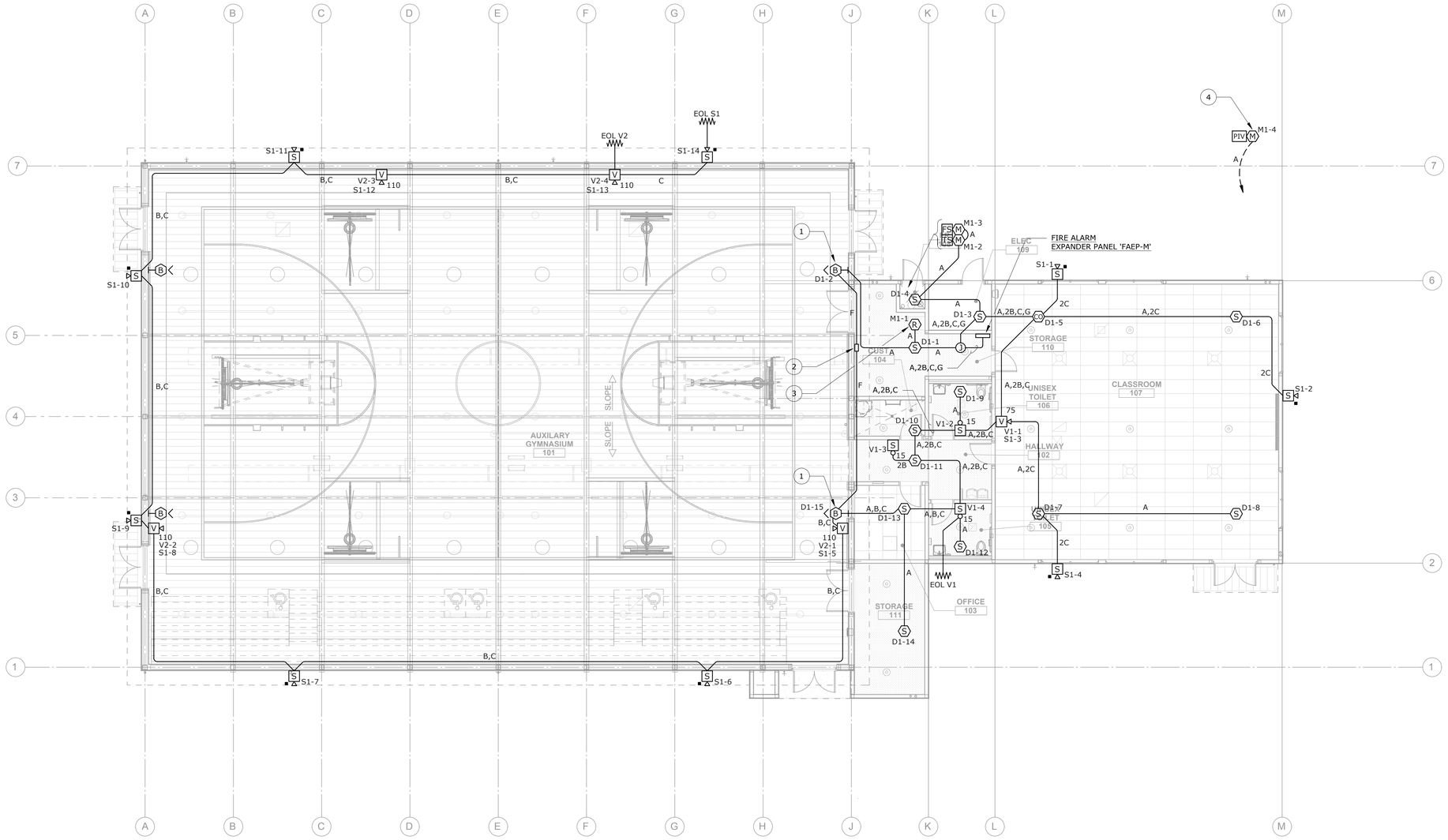

NUMBERED SHEET NOTES

1. MOUNT BEAM DETECTOR TRANSMITTER AND ASSOCIATED RECEIVER BETWEEN 12" AND 18" BELOW ROOF. VERIFY CLEAR PATH FOR PROJECTED BEAM PRIOR TO ROUGH-IN.
2. PROVIDE AND INSTALL REMOTE CONTROLLER FOR PROJECTED BEAM DETECTORS. CONNECT COMPLETE TO DETECTORS WITH CONTROL WIRE AS SHOWN.
3. PROVIDE AND INSTALL RELAY MODULE TO FACILITATE BUILDING FIRE ALARM SYSTEM CONNECTION TO AV RACK. COORDINATE EXACT LOCATION WITH AV SYSTEM INSTALLER. CONNECTION TO AV RACK BY AV SYSTEM INSTALLER.
4. PROVIDE AND INSTALL MONITOR MODULE FOR PIV. CONNECT COMPLETE TO BUILDING SLC CIRCUIT VIA NEAREST ADJACENT INITIATION DEVICE. RUN WIRING IN 1" CONDUIT.

FLOOR PLAN - FIRE ALARM

SCALE: 1/8" = 1'-0"

1 FE-M3.1

NORTH

KEYPLAN

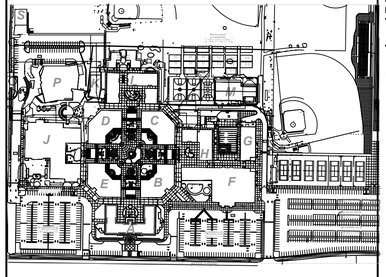

QUATTROCCHI KWOK ARCHITECTS
Main Office:
636 Fifth Street, Santa Rosa, CA 95404
East Bay:
55 Harrison Street, Suite 525
Oakland, CA 94607
(707) 576-0829

O'MAHONY & MYER
ELECTRICAL ENGINEERS and LIGHTING DESIGN
430 REDWOOD HWY, SUITE 245
SAN RAFAEL, CALIFORNIA 94903
(415) 492-0420/FAX (415) 479-0662
www.omaymeconsulting.com

REGISTERED PROFESSIONAL ENGINEER
P. COLEMAN BRADY
No.14738
Exp. 6/21
ELECTRICAL
STATE OF CALIFORNIA

FREEDOM HIGH SCHOOL

NEW AUXILIARY GYMNASIUM

1050 NEROLY RD,
OAKLEY, CA 94561

LIBERTY UNION HIGH SCHOOL DISTRICT

REVISIONS

DSA APP NO. 01-119278

ARCH PROJECT NO:	1869.00
DRAWN BY:	LN,TV,JW,OOM
DRAWING SCALE:	AS NOTED
PTN: 61721-78	FILE NO: 7-H4

BID DOCUMENT

APRIL 27, 2021

SHEET TITLE

FLOOR PLAN - FIRE ALARM

SHEET NUMBER

FE-M3.1

FREEDOM HS AUX GYMNASIUM - 220066

VOLTAGE DROP CALCULATIONS

FIRE ALARM EXPANDER PANEL 'RAMP-G'

SIGNAL CIRCUIT:	**V1**				
TOTAL CKT CURRENT =	0.329 A				
MAX VOLT-DROP =	**0.46%**				
SYSTEM VOLTAGE =	20.4 V				
Device Address-->	V1-1	V1-2	V1-3	V1-4	
Type of Device -->	75spstr	15str	15str	15str	eol
Current of Device (Amp) -->	0.165	0.053	0.053	0.053	0.005
Size of Wire (AWG) -->	#12	#12	#12	#12	#12
Distance to each Device (Ft) -->	47	18	39	30	5
Current Total (Amp) -->	0.329	0.164	0.111	0.058	0.005
Device Volt-drop -->	0.29%	0.35%	0.43%	0.46%	0.46%
Device Volt -->	20.3	20.3	20.3	20.3	20.3

SIGNAL CIRCUIT:	**V2**				
TOTAL CKT CURRENT =	0.901 A				
MAX VOLT-DROP =	**4.87%**				
SYSTEM VOLTAGE =	20.4 V				
Device Address-->	V2-1	V2-2	V2-3	V2-4	
Type of Device -->	110spstr	110spstr	110spstr	110spstr	eol
Current of Device (Amp) -->	0.224	0.224	0.224	0.224	0.005
Size of Wire (AWG) -->	#12	#12	#12	#12	#12
Distance to each Device (Ft) -->	109	149	106	45	5
Current Total (Amp) -->	0.901	0.677	0.453	0.229	0.005
Device Volt-drop -->	1.86%	3.77%	4.68%	4.87%	4.87%
Device Volt -->	20.0	19.6	19.4	19.4	19.4

BATTERY CALCULATIONS: **FIRE ALARM VOICE EVAC PANEL 'FACP2'**

STANDBY MODE

	EA (A)	QTY.	CURRENT
(E) CONTROL UNIT/LOADS	0.573	2	1.146
(E) ANNUNCIATOR	0.087	1	0.087
(E) DETECTORS, MODULES & REMOTE MIC	0.080	1	0.080
DETECOTRS	0.0004	13	0.005
CO DETECTOR	0.0010	1	0.001

TOTAL STANDBY CURRENT = 1.319 A
REQUIRED (24 HOURS) = 31.655 AH

ALARM MODE

	EA (A)	QTY.	CURRENT
(E) CONTROL UNIT/LOADS	0.720	2	1.440
(E) ANNUNCIATOR	0.087	1	0.087
(E) DETECTORS, MODULES & REMOTE MIC	0.006	1	0.006
	0.001	0	0.000
	0.017	0	0.000
(E) 1/2W SPEAKERS	0.032	8	0.256
(E) 1W SPEAKERS	0.064	1	0.064
DETECTORS	0.006	13	0.078
CO DETECTOR	0.017	1	0.017
MODULES	0.005	4	0.020

TOTAL ALARM CURRENT = 1.968 A
REQUIRED (15 MIN) = 0.492 AH

TOTAL POWER REQUIRED WITH 120%
BATTERY DERATING FACTOR = **38.576 AH**

PROVIDE TWO 12V, 55AH BATTERIES
MOUNTED IN SEPARATE ENCLOSURE
BATTERIES SHALL BE MARKED WITH
THE MONTH AND YEAR OF THEIR MANUFACTURE

BATTERY CALCULATIONS: **FIRE ALARM EXTENDER PANEL 'RAMP-G'**

STANDBY MODE

	EA (A)	QTY.	CURRENT
CTRL UNIT	0.087	1	0.087

TOTAL STANDBY CURRENT = 0.087 A
REQUIRED (24 HOURS) = 2.088 AH

ALARM MODE

	EA (A)	QTY.	CURRENT
CTRL UNIT	0.087	1	0.087
NOTIFICATION CKT V1	0.329	1	0.329
NOTIFICATION CKT V2	0.901	1	0.901
1/2W SPEAKERS	0.032	5	0.160
1W SPEAKERS	0.064	9	0.576

TOTAL POWER REQUIRED WITH 120%
BATTERY DERATING FACTOR = **2.506 AH**

REPLACE (E) WITH TWO 12V, 9AH BATTERIES
BATTERIES SHALL BE MARKED WITH
THE MONTH AND YEAR OF THEIR MANUFACTURE

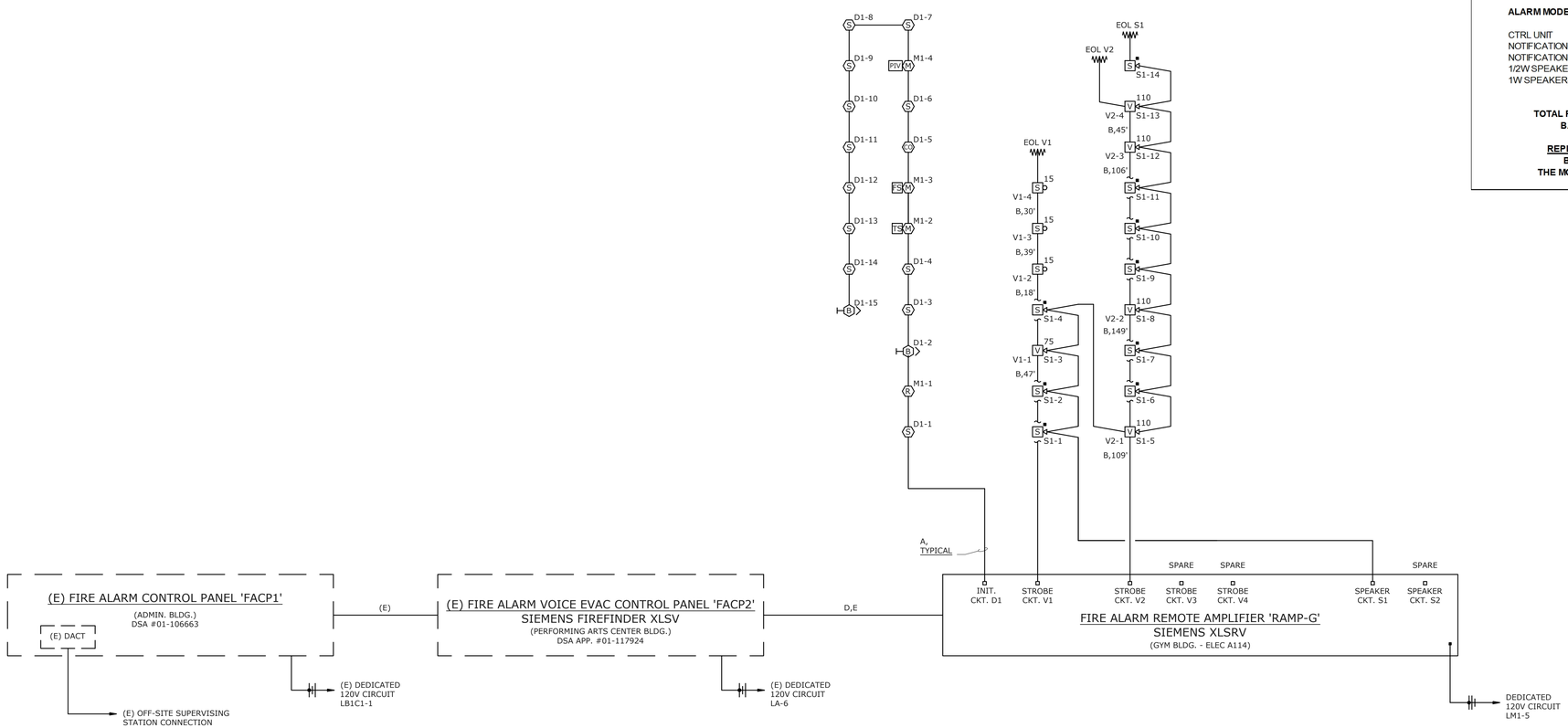

FIRE ALARM RISER DIAGRAM
SCALE: NONE
1 / E-5.1

QUATTROCCHI KWOK ARCHITECTS
Main Office:
636 Fifth Street, Santa Rosa, CA 95404
East Bay:
55 Harrison Street, Suite 525
Oakland, CA 94607
(707) 576-0829

O'MAHONY & MYER
ELECTRICAL ENGINEERS and LIGHTING DESIGN
4340 REDWOOD HWY., SUITE 245
SAN RAFAEL, CALIFORNIA 94903
(415) 492-0420/FAX (415) 479-0662
www.ommconsulting.com

REGISTERED PROFESSIONAL ENGINEER
COLEMAN P. MYER
No.14738
Exp. 6/21
ELECTRICAL
STATE OF CALIFORNIA

FREEDOM HIGH SCHOOL

NEW AUXILIARY GYMNASIUM

1050 NEROLY RD,
OAKLEY, CA 94561

LIBERTY UNION HIGH SCHOOL DISTRICT

REVISIONS

DSA APP NO. 01-119278

ARCH PROJECT NO: 1869.00
DRAWN BY: LN,TV,JW,OOM
DRAWING SCALE: AS NOTED
PTN: 61721-78 FILE NO: 7-H4

BID DOCUMENT

APRIL 27, 2021

SHEET TITLE

FIRE ALARM RISER DIAGRAM

SHEET NUMBER

FE-5.1

LIST OF GOVERNING CODES

2019 BUILDING STANDARDS ADMINISTRATIVE CODE, PART 1, TITLE 24, C.C.R.
2019 CALIFORNIA BUILDING CODE (CBC), PART 2, TITLE 24, C.C.R.
2019 CALIFORNIA ELECTRICAL CODE, PART 3, TITLE 24, C.C.R.
2019 CALIFORNIA MECHANICAL CODE (CMC), PART 4, TITLE 24, C.C.R.
2019 CALIFORNIA PLUMBING CODE (CPC), PART 5, TITLE 24, C.C.R.
2019 CALIFORNIA ENERGY CODE (CEC), PART 6, TITLE 24, C.C.R.
2019 CALIFORNIA FIRE CODE (CFC), PART 9, TITLE 24, C.C.R.
2019 CALIFORNIA GREEN BUILDING STANDARDS CODE, PART 11, TITLE 24, C.C.R.
2019 CALIFORNIA REFERENCED STANDARDS CODE, PART 12, TITLE 24, C.C.R.
TITLE 19, C.C.R., PUBLIC SAFETY, STATE FIRE MARSHAL REGULATIONS.
2016 NFPA 13 AS AMENDED
2016 NFPA 24 AS AMENDED

ALL SECTION NUMBERS BELOW REFER TO GROUP 1, CHAPTER 4, PART 1, TITLE 24, C.C.R.

1. ADDENDA, CONSTRUCTION CHANGES PER SECTION 4-338.
2. INSPECTOR APPROVED BY DSA. INSPECTOR AND CONTINUOUS INSPECTION OF WORK PER SECTION 4-333(b) AND 4-342.
3. TESTS AND TESTING LABORATORY PER SECTION 4-335.
4. SPECIAL INSPECTION PER SECTION 4-333(c).
5. CONTRACTOR SHALL SUBMIT VERIFIED REPORTS PER SECTION 4-336 AND 4-343(c).
6. ADMINISTRATION OF CONSTRUCTION PER PART 1, TITLE 24, C.C.R. - DUTIES OF ARCHITECT, STRUCTURAL ENGINEER OR PROFESSIONAL ENGINEER PER SECTION 4-333(a) AND 4-341.
7. GOVERNING CODES: TITLE 24.
8. A COPY OF PARTS 1, 2, 3, 4, AND 5 OF TITLE 24 SHALL BE KEPT AVAILABLE IN THE FIELD DURING CONSTRUCTION.
9. DSA SHALL BE NOTIFIED OF START OF CONSTRUCTION PER SECTION 4-331.
10. SUPERVISION BY THE DIVISION OF THE STATE ARCHITECT PER SECTION 4-334.

FIRE FLOW CALCULATIONS:

CODE REQUIREMENTS SITE FLOW:

CONSTRUCTION TYPE:	V-B (WITH AUTOMATIC SPRINKLER SYSTEM)
FIRE FLOW CALCULATION AREA:	9,974 SF
2019 CFC FIRE FLOW(TABLE BB105.1)	2,750 GPM
2019 CFC MINIMUM FIRE FLOW:	1,500 GPM

AVAILABLE WATER SUPPLY:

HOUSTON FIRE SYSTEMS TEST 1	MARCH 31, 2021
STATIC PRESSURE:	44 PSI, SEE FP1.1 FOR LOCATION
RESIDUAL PRESSURE:	36 PSI
OBSERVED FLOW:	919 GPM
AVAILABLE FLOW:	1663 GPM @ 20 PSI RESIDUAL

SEISMIC BRACING:

SPECTRAL RESPONSE:
LATITUDE: 37.97067940° W
LONGITUDE: 121.72025840° N
Ss = 1.371 (2016 ASCE 7 STANDARD)
SEE DESIGN CRITERIA ON STRUCTURAL DRAWING

SEISMIC COEFFICIENT:
Cp = 0.65 (2016 NFPA 13-TABLE 9.3.5.9.3)

USE Cp = 0.65
SEE DRAWING FP-6.1 AND FP-6.2 FOR SPECIFIC SEISMIC BRACING DETAILS AND FP-6.3 FOR CALCULATIONS.

UNDERGROUND FIRE SERVICE GENERAL NOTES:

NFPA 24 (2016) SEC. 10.4.1.1 ALL BOLTED JOINT ACCESSORIES SHALL BE CLEANED AND THOROUGHLY COATED WITH ASPHALT OR OTHER CORROSION-RETARDING MATERIAL AFTER INSTALLATION. ALL METALLIC PIPE FITTINGS SHALL BE PROTECTED FROM CORROSIVE SOIL IN ACCORDANCE WITH SPECIFICATION 21 10 00.

NFPA 24 (2016) SEC. 10.8.3.5 AFTER INSTALLATION RODS, NUTS, BOLTS, WASHER, CLAMPS, AND OTHER RESTRAINING DEVICE, EXCEPT THRUST BLOCKS, SHALL BE CLEANED AND THOROUGHLY COATED WITH A BITUMINOUS OR OTHER ACCEPTABLE CORROSION-RETARDING MATERIALS

NFPA 24 (2016) SEC. 10.8.2 THRUST BLOCKS SHALL BE OF A CONCRETE MIX NOT LEANER THAN ON PART CEMENT, TWO AND ONE-HALF PARTS SAND, AND FIVE PARTS STONE WITH A MINIMUM COMPRESSIVE STRENGTH (Fc) OF 2500 PSI. THRUST BLOCKS SHALL BE PLACED BETWEEN UNDISTURBED EARTH AND THE FITTING TO BE RESTRAINED AND SHALL BE OF SUCH BEARING AS TO ENSURE ADEQUATE RESISTANCE TO THRUST TO BE ENCOUNTERED IN GENERAL, THRUST BLOCKS SHALL BE SO PLACED THAT THE JOINTS WILL BE ACCESSIBLE FOR INSPECTION AND REPAIR.

NFPA 24 (2016) SEC. 10.10.2.1 UNDERGROUND MAINS SHALL BE COMPLETELY FLUSHED TO REMOVE FOREIGN MATERIALS THAT MIGHT HAVE ENTERED THE MAIN DURING THE COURSE OF THE INSTALLATION PER TABLE 10.10.2.1.3 TO PRODUCE A VELOCITY OF 10 FEET PER SECOND IN PIPES. LOCAL FIRE JURISDICTION SHALL BE NOTIFIED OF DATE AND TIME OF TESTING SO THEY MAY OBSERVE TESTING

NFPA 24 (2016) SEC 10.10.2.2 ALL NEW PRIVATE UNDERGROUND FIRE SERVICE MAINS SHALL BE TESTED HYDROSTATICALLY AT NO LESS THAN 200-PSI PRESSURE FOR A MINIMUM OF TWO HOUR. LOCAL FIRE JURISDICTION SHALL BE NOTIFIED OF DATE AND TIME OF TESTING AND SHALL OBSERVE AND/OR ASSIST IOR WHENEVER POSSIBLE

THE AMOUNT OF LEAKAGE IN BURIED PIPING SHALL BE MEASURE AT THE SPECIFIED TEST PRESSURE BY PUMPING FROM A CALIBRATED CONTAINER. FOR NEW PIPE, THE AMOUNT OF LEAKAGE AT THE JOINTS SHALL NOT EXCEED TWO QUARTS PER HOUR PER 100 GASKETS OR JOINTS IRRESPECTIVE OF PIPE DIAMETER. NO VISIBLE LEAKAGE SHALL BE ALLOWED IN ABOVEGROUND PIPING. (ALSO SEE SEC. 10.10.2.6 FOR ALLOWABLE LEAKAGE)

HYDROSTATIC TESTS SHALL BE MADE BEFORE THE JOINTS ARE COVERED SO THAT ANY LEAKS MAY BE READILY DETECTED.

NFPA 24 (2016) SEC 10.10 BEFORE ASKING FINAL APPROVAL OF AN INSTALLATION BY THE INSPECTOR OF RECORD, THE INSTALLING COMPANY SHALL FURNISH A CONTRACTORS MATERIAL AND TEST CERTIFICATE TO BE SUBMITTED TO THE OWNER. A TYPICAL CERTIFICATE IS SHOWN IN FIGURE 10.10.1. THIS FORM SHALL BE GIVEN TO THE APPROVING AUTHORITY, OWNER, AND CONTRACTOR.

NFPA 24 (2016)SEC 10.4 THE DEPTH OF COVER OVER WATER PIPES SHALL BE NOT LESS THAN 2'-6" TO PREVENT MECHANICAL DAMAGE AD SHALL BE BURIED A MINIMUM OF 3'-0" UNDER DRIVEWAYS.

THE METHOD USED FOR UNDERGROUND FIRE LINES WHEN ENTERING BUILDING UNDER CONCRETE. NFPA 24(2016) SEC, 12.2.6, NFPA (2016)9.3.4.2 REQUIRES A CLEARANCE BY A PIPE SLEEVE WITH A NOMINAL DIAMETER 4 IN. LARGER THAN THE NOMINAL DIAMETER OF THE SUPPLY PIPING 4 IN. NOMINAL AND LARGER. (I.E FIRE LINES NOMINAL 6IN, REQUIRES 10 IN. SLEEVE)

CPC SEC. 601.1 (2016) PVD PIPING MAY BE INSTALLED TO 5 FEET OUTSIDE THE FOUNDATION OF ANY BUILDING OR STRUCTURE OR PARTS THEROF. IT SHALL BE BURIED IN THE GROUND FOR IS ENTIRE LENGTH. IS SHALL NOT BE INSTALLED WITHIN OR UNDER ANY BUILDING OR STRUCTURE. (DUCTILE PIPE SHALL BE INSTALLED WITHIN 5 FEET OF BUILDING)

OVERHEAD FIRE SPRINKLER SYSTEM GENERAL NOTES:

NFPA 13 (2016) SEC, 9.2.1.3.3.4 WHERE FLEXIBLE SPRINKLER HOSE FITTINGS ARE USED TO CONNECT SPRINKLER TO BRANCH LINES IN SUSPENDED CEILINGS, A LABEL LIMITING RELOCATION OF THE SPRINKLER SHALL BE PROVIDED ON THE ANCHORING COMPONENT.

NFPA 13 (2016) SEC. 10.10.2.1 UNDERGROUND MAINS AND LEAD-IN CONNECTION MADE TO OVERHEAD SPRINKLER PIPING SYSTEMS SHALL BE COMPLETELY FLUSHED

NFPA 13(2016) SEC. 10.10.2.2 ALL INTERIOR PIPING AND APPURTENANCES SUBJECT TO SYSTEM WORKING PRESSURE SHALL BE HYDROSTATICALLY TESTED AT 200 PSI AND SHALL MAINTAIN THAT PRESSURE WITHOUT LOSS FOR 2 HOURS. LOCAL FIRE DEPARTMENT SHOULD BE NOTIFIED OF DATE AND TESTING SO THEY MAY OBSERVE TESTING.

NFPA 13 (2016) SEC 6.2.9 PROVIDE SPARE SPRINKLER HEAD CABINET, SPRINKLER WRENCH, AND NO FEWER THAT A TOTAL OF 6 SPARE SPRINKLER HEADS MATCHING THE TYPES AND TEMPERATURE RATINGS IN EACH PROTECTED BUILDING FOR SYSTEMS LESS THAN 300 SPRINKLERS AND FEWER THAN 12 FOR SYSTEMS HAVING 300 TO 1000 SPRINKLERS.

NFPA 13 (2016) SEC, 9.3.6.1 PROVIDE RESTRAINT OF BRANCH LINES BY USING ONE OF THE FOLLOWING:
(1) LISTED SWAY BRACE ASSEMBLY
(2) WRAPAROUND U-HOOK SATISFYING THE REQUIREMENTS OF 9.3.5.5.11
(3) NO. 12 440 LB (200 KG) WIRE INSTALLED AT LEAST 45 DEGREES FROM THE VERTICAL PLANE AND ANCHORAGE ON BOTH SIDES OF THE PIPE.
(4) CPVC HANGERS LISTED TO PROVIDE RESTRAINT
(5) HANGER NOT LESS THAN 45 DEGREES FROM VERTICAL INSTALLED WITHIN 6 IN. OF THE VERTICAL HANGER ARRANGED FOR RESTRAINT AGAINST UPWARD MOVEMENT, PROVIDED IT IS UTILIZED SUCH THAT L/R DOES NOT EXCEED, WHERE THE ROD EXTENDS TO THE PIPE OR A SURGE CLOP HAS BEEN INSTALLED.

NFPA 72 (2016) SEC, 17.12.2 SPRINKLER FLOW SWITCH SHALL BE TESTED BY IOR TO CONFIRM THAT WHEN THE INSPECTOR'S TEST VALVE IS ACTIVATED AN ALARM WILL SOUND IN NOT MORE THAN 90 SECONDS.

NFPA 13 (2016) SEC. 6.9.3 FLOW SWITCH SHALL BE CONNECTED TO AN OUTSIDE ALARM BELL FOR EACH RISER. APPROVED IDENTIFICATION SIGN SHALL BE PROVIDED FOR OUTSIDE ALARM BELL "SPRINKLER FIRE ALARM WHEN BELL RINGS CALL 911/FIRE DEPARTMENT.

THE PLANS SHALL INCLUDE THE INFORMATION ON THE HYDRAULIC DESIGN INFORMATION SIGN, IN COMPLIANCE WITH NFPA 13 SECTION 23.1.3 ITEM 31 AND CBC CHAPTER 35 AMENDMENTS TO NFPA 13 SECTION 25.5.1 AND 25.5.2

NFPA 13 (2016) SEC. 25.1(3) SPRINKLER CONTRACTOR (C16) SHALL COMPLETE AND SIGH CONTRACTOR'S MATERIAL AND TEST CERTIFICATE FOR THE OVERHEAD SPRINKLER SYSTEM USING FORM IN FIGURE 251 THIS COMPLETED FORM SHALL BE GIVEN TO THE APPROVING AUTHORITY, OWNER AND CONTRACTOR.

NFPA 13 (2016) SEC. 25.1.3.4.1 THE MAIN DRAIN VALVE SHALL BE OPENED AND REMAIN OPENED UNTIL THE SYSTEM PRESSURE STABILIZES. THE STATIC AND RESIDUAL PRESSURES SHALL BE RECORDED ON THE CONTRACTOR'S TEST CERTIFICATE.

TITLE 19 ARTICLE (A) A LABEL OF SELF-ADHESIVE TYPE SHALL BE PLACED ON THE FIRE DEPARTMENT CONNECTION OR ON THE RISER FOR THE FIRE SPRINKLER SYSTEM WITH THE DATE OF SERVICE AND/OR DATE OF INSTALLATION WAS PREFORMED AND LICENSE NUMBER OF PERSON PERFORMING SERVICE WORK.

THE SPRINKLER CONTRACTOR SHALL HAVE A REPRESENTATIVE PRESENT AT THE ROUGH-IN/HYDRO INSPECTION.

NFPA 13 (2016) SEC. 9.3.4.2 WHERE PIPE PASSES THROUGH HOLES IN PLATFORMS, FOUNDATIONS, WALLS, OR FLOORS, THE HOLES SHALL BE SIZED SUCH THAN THE DIAMETER OF THE HOLE IS NOMINALLY 2' LARGER THAN THE PIPE 1" NOMINAL TO 3½" NOMINAL AND 4" LARGER THAN PIPE FOR PIPE 4" NOMINAL AND LARGER.

DSA GENERAL NOTES

1. THE INTENT OF THE CONTRACT DOCUMENTS IS NEW GYM ON THE SCHOOL'S CAMPUS. SHOULD ANY CONDITIONS DEVELOP NOT COVERED BY THE CONTRACT DOCUMENTS, A CONSTRUCTION CHANGE DOCUMENT DETAILING AND SPECIFYING THE REQUIRED WORK SHALL BE SUBMITTED TO AND APPROVED BY DSA BEFORE PROCEEDING WITH THE WORK.
2. ALL HANGERS AND SEISMIC SWAY BRACING SHALL BE DESIGNED AND INSTALLED PER NFPA 13 AND CHAPTER 16A CALIFORNIA BUILDING CODE
3. ALL ANCHORAGE SHALL BE INSTALLED IN ACCORDANCE WITH DETAILS ON THE DSA APPROVED DRAWINGS
4. NO DEMOLITION SHALL BEGIN UNTIL PLANS INCLUDING THE DEMOLITION WORK HAVE BEEN APPROVED BY DSA.

FIRE DEPARTMENT CONNECTIONS:

NFPA 13(2016) SEC. 8.17.2.5.1 CHECK-VALVE SHALL BE PROVIDED AT FIRE DEPARTMENT CONNECTION ASSEMBLY (FDC) TO PREVENT WATER (PRESSURE) AT INLET OF FDC INLET

TITLE 19 ARTICLE 906 (A) A LABEL OF THE SELF- ADHESIVE TYPE SHALL BE PLACED ON THE FIRE DEPARTMENT CONNECTION OR ON THE RISER FOR FIRE SPRINKLER SYSTEMS WITH THE DATE OF SERVICE AND/OR DATE INSTALLATION WAS PERFORMED ND LICENSE NUMBER OF PERSON PERFORMING SERVICE WORK.

SYMBOL LEGEND

SYMBOL	ABBRV.	IDENTIFICATION
F	F	FIRE WATER
SPKR	SPKR	SPRINKLER
		PENDENT ON 401 EXTENSION
		RECESSED PENDENT
		UPRIGHT W/ 1" OUTLET BELOW
		UPRIGHT ON 1" SPRIG UP
		UPRIGHT ON BRANCH LINE
		UPRIGHT OVER PENDENT
		SIDEWALL
		GROOVED COUPLING
SB-X		EQ BRACE LOCATION
		4WAY EQ BRACE LOCATION
		HANGER LOCATION
		BRANCH LINE RESTRAINT
X		HYDRAULIC CALCULATION NODE
	CHVA	CHECK VALVE
		GATE VALVE
	T&PRV	TEMP & PRESS RELIEF VALVE
	DCDA	DOUBLE CHECK DETECTOR ASSEMBLY
		UNION
P		PRESSURE GAUGE
	FC	FLEXIBLE CONNECTION
	RPBP	REDUCE PRESS BACKFLOW PREVENTER
	FH	FIRE HYDRANT
	PIV	POST INDICATING VALVE
	FDC	FIRE DEPARTMENT CONNECTION
AD	AD	ACCESS DOOR
		90 DOWN
		TEE DOWN
Ø	DIA	DIAMETER
	P.O.C.	POINT OF CONNECTION
℄		CENTERLINE

ABBREVIATIONS

&	AND
°F	DEGREES FAHRENHEIT
AC	AIR CONDITIONER
AFF	ABOVE FINISH FLOOR
AFUE	ANNUAL FUEL UTILIZATION EFFICIENCY
AL	ACOUSTICALLY LINED
AMP	AMPERE
APPROX	APPROXIMATE
ARCH	ARCHITECT/ARCHITECTURAL
BHP	BRAKE HORSEPOWER
BLDG	BUILDING
BTU	BRITISH THERMAL UNIT
BTUH	BRITISH THERMAL UNITS PER HOUR
CA	COMBUSTION AIR
CFH	CUBIC FEET PER HOUR
CFM	CUBIC FEET PER MINUTE
CIRC	CIRCULATING
CLG	CEILING
CONC	CONCRETE
CONN	CONNECTION
CONT	CONTINUED, CONTINUATION
COOL	COOLING
COP	COEFFICIENT OF PERFORMANCE
DB	DRY BULB
DF	DRINKING FOUNTAIN
D/L	DOOR LOUVER
DN	DOWN
DWGS	DRAWINGS
(E)	EXISTING
EA	EXHAUST AIR
EAT	ENTERING AIR TEMPERATURE
EER	ENERGY EFFICIENCY RATIO
ELEC	ELECTRICAL
ELEV	ELEVATION
EQUIP	EQUIPMENT
ESP	EXTERNAL STATIC PRESSURE
EWB	ENTERING WET BULB
EWT	ENTERING WATER TEMPERATURE
EXT	EXTERIOR
FD	FLOOR DRAIN
FFE	FINISHED FLOOR ELEVATION
FLA	FULL LOAD AMPS
FLEX	FLEXIBLE
FLR	FLOOR
FEET	PER MINUTE FPM
FS	FLOOR SINK
FT	FEET
FT HD	FEET HEAD
FPM	FEET PER MINUTE
FTR	FLUE THRU ROOF
GPM	GALLONS PER MINUTE
HP	HORSEPOWER
HR	HOUR
HTG	HEATING
HZ	HERTZ
IE	INVERT ELEVATION
IN	INCH
INV	INVERT
KW	KILOWATTS
LAT	LEAVING AIR TEMPERATURE
LBS	POUNDS
LWT	LEAVING WATER TEMPERATURE
LWB	LEAVING WET BULB
MAX	MAXIMUM
MBH	1000 BTU PER HOUR
MCA	MINIMUM CIRCUIT AMPS
MCP	MECHANICAL CONTROL PANEL
MECH	MECHANICAL
MFR	MANUFACTURER
MIN	MINIMUM
MOCP	MAXIMUM OVERCURRENT PROTECTION
(N)	NEW
NC	NORMALLY CLOSED
NIC	NOT IN CONTRACT
NO	NORMALLY OPEN
NTS	NOT TO SCALE
OA	OUTSIDE AIR
OC	ON CENTER
PD	PRESSURE DROP
PH	PHASE
PRV	PRESSURE REDUCING VALVE
PSI	POUNDS PER SQUARE INCH
P/T	PRESSURE/TEMPERATURE
QTY	QUANTITY
RA	RETURN AIR
RM	ROOM
RPM	REVOLUTIONS PER MINUTE
RV	RELIEF VALVE
SA	SUPPLY AIR
SC	SENSIBLE COOLING
SEER	SEASONAL ENERGY EFFICIENCY RATIO
SOV	SHUT-OFF VALVE
SP	STATIC PRESSURE
SPEC	SPECIFICATION
SQ	SQUARE
STRUCT	STRUCTURAL
TC	TOTAL COOLING
TDH	TOTAL DYNAMIC HEAD
TEMP	TEMPERATURE
TSP	TOTAL STATIC PRESSURE
TV	TURNING VANES
TYP	TYPICAL
UL	UNDERWRITER'S LABORATORIES
UON	UNLESS OTHERWISE NOTED
V	VOLT
VTR	VENT THROUGH ROOF
W/	WITH
WB	WET BULB
WC	WATER COLUMN
WH	WATER HEATER
WT	WEIGHT

CEG JOB NO: 20118

REGISTERED PROFESSIONAL ENGINEER
STEVEN E. RAWSON
No. M36657
EXP. JUNE 30, 2022
MECHANICAL
STATE OF CALIFORNIA

CYPRESS Engineering Group
831.218.1802
8 Harris Court, Suite A8
Monterey, CA 93940
cypresseg.com
HVAC, Plumbing, Fire Protection
Building Commissioning
Industrial Refrigeration
Environmental Compliance
Training & Technical Support

QUATTROCCHI KWOK ARCHITECTS
Main:
636 Fifth Street, Santa Rosa, CA 95404
East Bay:
55 Harrison Street, Suite 525,
Oakland, CA 94607
(707) 576-0829

FREEDOM HIGH SCHOOL

NEW AUXILIARY GYMNASIUM

1050 NEROLY RD,
OAKLEY, CA 94561

LIBERTY UNION HIGH SCHOOL DISTRICT

REVISIONS

DSA APP NO. 01-119278

ARCH PROJECT NO:	1869.00
DRAWN BY:	CAD
DRAWING SCALE:	NONE
PTN: 61721-78	FILE NO: 7-H4

BID DOCUMENT

APRIL 27, 2021

SHEET TITLE

LEGEND, NOTES, AND ABBREVIATIONS - FIRE PROTECTION

SHEET NUMBER

FP-0.1

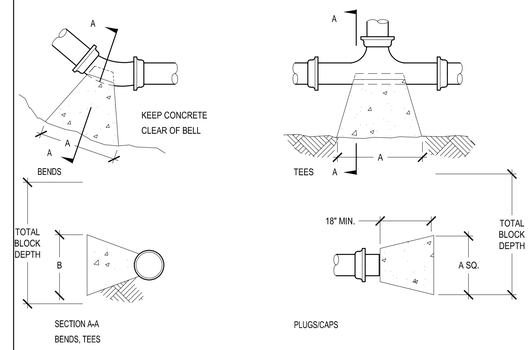

SOIL BEARING CAPACITY 2000 PSF FOR CLAYEY SAND SOILS TYPE ACCORDANCE WITH NFPA 13: TABLE A10.6(c). SEE GEOTECHICAL REPORT FOR DESCRIPTION OF SOIL CONDITIONS.

TRUST BLOCK CALCULATIONS PER NFPA 13: A10.6.1(b)
6"-90 BEND AREA = (7.9 S.F.)(225 PSI/100PSI)(1000 PSF/2000PSF) = 8.9 S.F.
6"-45 BEND AREA = 8.9 S.F. x 0.541 = 4.8 S.F.
6"-22.5 BEND AREA = 8.9 S.F. x 0.275 = 2.5 S.F.
6"-DEAD END AREA = (5.6 S.F.)(225 PSI/100 PSI)(1000 PSF/2000PSF) = 6.3 S.F.

PIPE SIZE	90° BENDS			45° BENDS			22.5° BENDS			TEES AND PLUGS		
	SQ. FT.	"A"	"B"	SQ. FT.	"A"	"B"	SQ. FT.	"A"	"B"	SQ. FT.	"A"	"B"
6	8.9	53"	24"	4.8	39"	18"	2.5	30"	12"	6.3	43"	21"

BASED ON A WATER PRESSURE OF 225 POUNDS PER SQUIRE INCH AND A SOIL RESISTANCE OF 2000 POUNDS PER SQUARE FOOT, AND SAFETY FACTOR OF 1.5 IN ACCORDANCE WITH NFPA 13(2016) TABLE A.10.6.1(b).

TOTAL BLOCK DEPTH SHALL BE AT LEAST TWICE THE BLOCK DEPTH "B" IN ACCORDANCE WITH NFPA 24.

JOINT RESTRAINT SHALL UTILIZE BOTH THRUST BLOCKS AND MEGALUG MECHANICAL JOINT RESTRAINT FITTINGS PER LOCAL FIRE MARSHAL

3 THRUST BLOCK N.T.S.

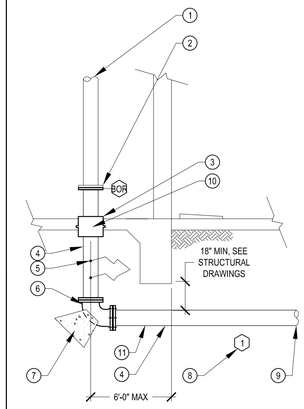

DETAIL NOTES:

1. FOR DETAIL OF OVERHEAD SPRINKLER SYSTEM RISER, SEE 1/FP6.1
2. UNDERGROUND WORK TO FLANGE WITH END CAP, 12" ABOVE FINISH GRADE, PROVIDE DIELECTRIC INSULATING FLANGE KIT, SEE CP-1.3.
3. PIPE SLEEVE NOMINALLY 4" GREATER IN DIAMETER THAN THE UNDERGROUND RISER IN ACCORDANCE WITH NFPA 13 9.3.4.2, SEE PLANS FOR SIZE
4. DUCTILE IRON, SEE PLANS FOR SIZE.
5. PROVIDE CATHODIC PROTECTION, SEE CP-1.2
6. DUCTILE IRON MJxFE 90° ELBOW
7. THRUST BLOCK SEE DETAIL 3/FP-0.2
8. HYDRAULIC CALCULATION NODE, TYPICAL
9. TO UNDERGROUND FIRE SERVICE, SEE C-3.0
10. FILL ANNULAR SPACE WITH FLEXIBLE FIRE CAULK IN ACCORDANCE WITH NFPA13-9.3.4.8.
11. PIPE JOINTS SHALL NOT BE LOCATED DIRECTLY UNDER FOOTING IN ACCORDANCE WITH NFPA13-10.4.3.1.1.

1 UNDERGROUND RISER N.T.S.

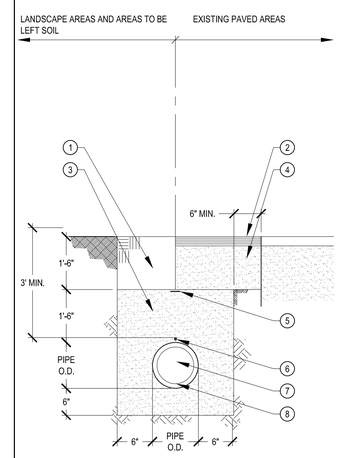

DETAIL NOTES:

1. SELECT NATIVE SOILS, 90% COMPACTION FOR AREAS TO BE LEFT IN NATIVE STATE ONLY. CAP AREAS IN UNPAVED ROADWAYS WITH 12" CLASS 2 AGGREGATE BASE, 95% COMPACTION
2. SAWCUT PAVEMENT EACH SIDE OF TRENCH 6' FROM TRENCH EDGE, REMOVE PAVEMENT AND BASEROCK, REPLACE AND RECOMPOST BASEROCK TACKCOAT EDGE AND REPAVE
3. SELECT SAND BACKFILL AT 95% COMPACTION
4. CLASS 2 AGGREGATE BASEROCK
5. PLASTIC WARNING TAPE MARKED "FIRE WATER"
6. 6 10 GA. COPPER TRACE WIRE COATED AND STRANDED TAPED ON TOP OF ALL NON-METALLIC PIPE
7. SAND BEDDING MATERIAL(95% COMPACTION)
8. FIRE SERVICE PIPING

2 UTILITY TRENCH N.T.S.

CEG JOB NO: 20118

REGISTERED PROFESSIONAL ENGINEER
STEVEN E. RAWDON
EXP. JUNE 30, 2022
MECHANICAL
STATE OF CALIFORNIA

CYPRESS Engineering Group
831.218.1802
8 Harris Court, Suite A8
Monterey, CA 93940
cypresseg.com
HVAC, Plumbing, Fire Protection
Building Commissioning
Industrial Refrigeration
Environmental Compliance
Training & Technical Support

QUATTROCCHI KWOK
ARCHITECTS
Main:
636 Fifth Street, Santa Rosa, CA 95404
East Bay:
55 Harrison Street, Suite 525,
Oakland, CA 94607
(707) 576-0829

FREEDOM HIGH SCHOOL

NEW AUXILIARY GYMNASIUM

1050 NEROLY RD,
OAKLEY, CA 94561

LIBERTY UNION
HIGH SCHOOL
DISTRICT

REVISIONS

DSA APP NO. 01-119278

ARCH PROJECT NO: 1869.00
DRAWN BY: CAD
DRAWING SCALE: NONE
PTN: 61721-78 FILE NO: 7-H4

BID DOCUMENT

APRIL 27, 2021

SHEET TITLE

DETAILS - FIRE PROTECTION

SHEET NUMBER

FP-0.2

GENERAL NOTES

1. UNDERGROUND FIRE SERVICE PIPING SHOWN ON DRAWING FP-1.1 TO SHOW HYDRAULIC NODE LOCATIONS REQUIRED FOR OVERHEAD SPRINKLER HYDRAULIC CALCULATION. DESIGN AND SPECIFICATION FOR NEW UNDERGROUND FIRE SERVICE PIPING IS BY CIVIL ENGINEER,SEE CIVIL DRAWINGS AND SPECIFICATION.

KEY NOTES

1. FIRE RISER WITH CONTROL VALVE AND FLOW SWITCH THAT REQUIRES MONITORING BY FIRE ALARM SYSTEM

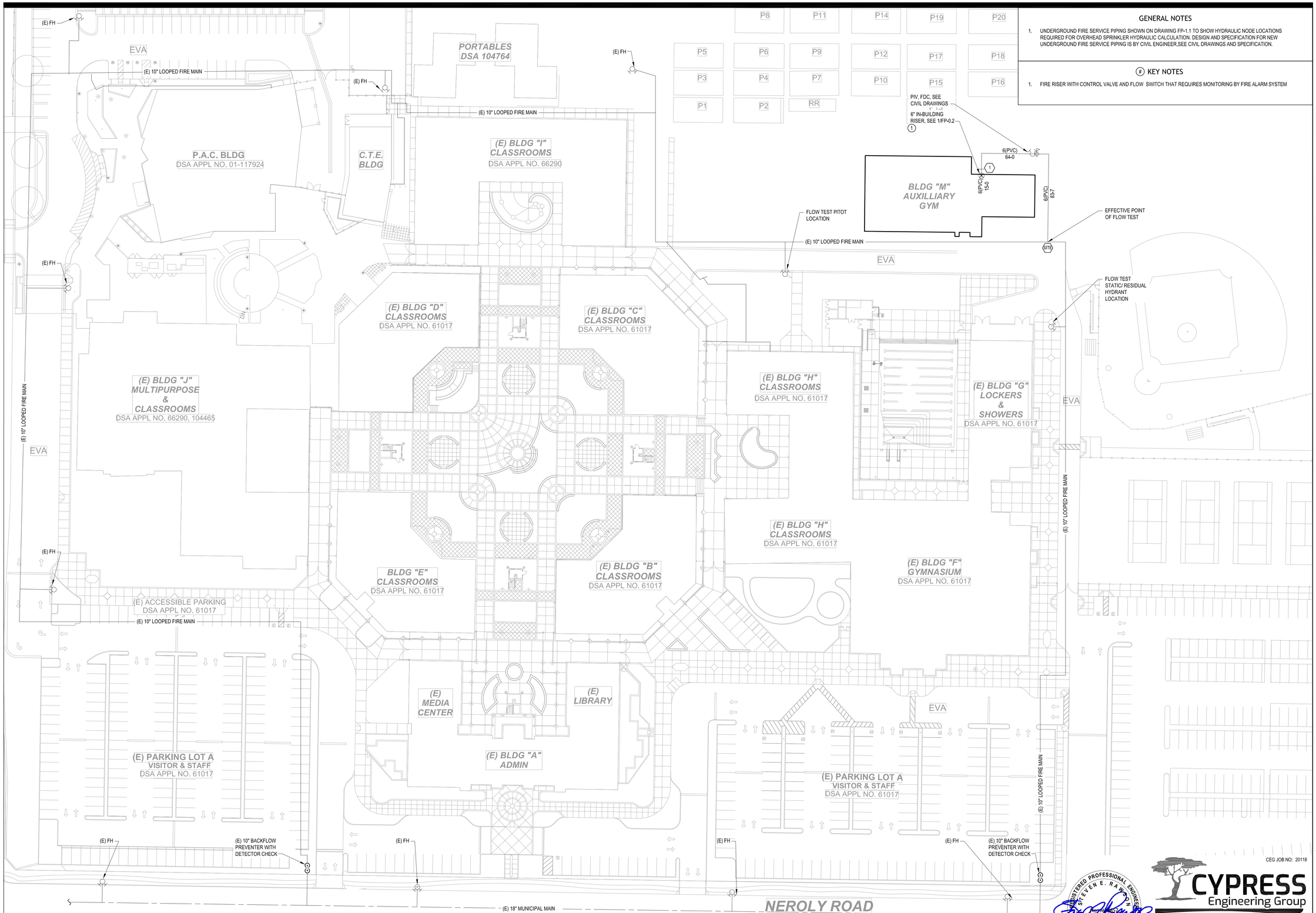

1 FP-1.1 SITE PLAN - FIRE PROTECTION
SCALE: 1" = 40'-0"

QUATTROCCHI KWOK
ARCHITECTS
Main:
636 Fifth Street, Santa Rosa, CA 95404
East Bay:
55 Harrison Street, Suite 525,
Oakland, CA 94607
(707) 576-0829

FREEDOM HIGH SCHOOL

NEW AUXILIARY GYMNASIUM

1050 NEROLY RD,
OAKLEY, CA 94561

LIBERTY UNION
HIGH SCHOOL
DISTRICT

REVISIONS

DSA APP NO. 01-119278

ARCH PROJECT NO:	1869.00
DRAWN BY:	CAD
DRAWING SCALE:	1" = 40'-0"
PTN: 61721-78	FILE NO: 7-H4

BID DOCUMENT

APRIL 27, 2021

SHEET TITLE

SITE PLAN - FIRE PROTECTION

REGISTERED PROFESSIONAL ENGINEER
STEVEN E. RAYNER
No. M-18222
EXP. JUNE 30, 2022
MECHANICAL
STATE OF CALIFORNIA

CEG JOB NO: 20118

CYPRESS Engineering Group
831.218.1802
8 Harris Court, Suite A8
Monterey, CA 93940
cypresseg.com
HVAC, Plumbing, Fire Protection
Building Commissioning
Industrial Refrigeration
Environmental Compliance
Training & Technical Support

SHEET NUMBER

FP-1.1

GENERAL NOTES

NOTES:

1. ALL DIMENSIONS ARE CENTERLINE TO CENTERLINE UNLESS OTHERWISE NOTED.
2. ALL PIPE 1-1/2" AND SMALLER SHALL BE SCHEDULE 40 BLACK STEEL WITH CAST IRON THREADED FITTINGS IN ACCORDANCE WITH ANSI B16.4.
3. ALL PIPE 2" AND GREATER SHALL BE SCHEDULE 10 BLACK WITH GROOVED COUPLINGS AND WELDED OUTLETS.
4. ALL PIPE 1-1/2" AND SMALLER SHALL HAVE SUPPORT SPACING LESS THAN 12 FEET.
5. ALL PIPE 2" AND GREATER SHALL HAVE SUPPORT SPACING LESS THAN 15 FEET.
6. BRANCH LINES SHALL BE RESTRAINED WITH NO. 12 440 LB WIRE AT THE END OF BRANCH LINE, AND AT INTERVALS NOT EXCEEDING 30 FT.
7. PROVIDE 1" ANNULAR CLEARANCE AT ALL SPRINKLER PENETRATIONS OF LAY IN PANEL SUSPENDED CEILINGS.

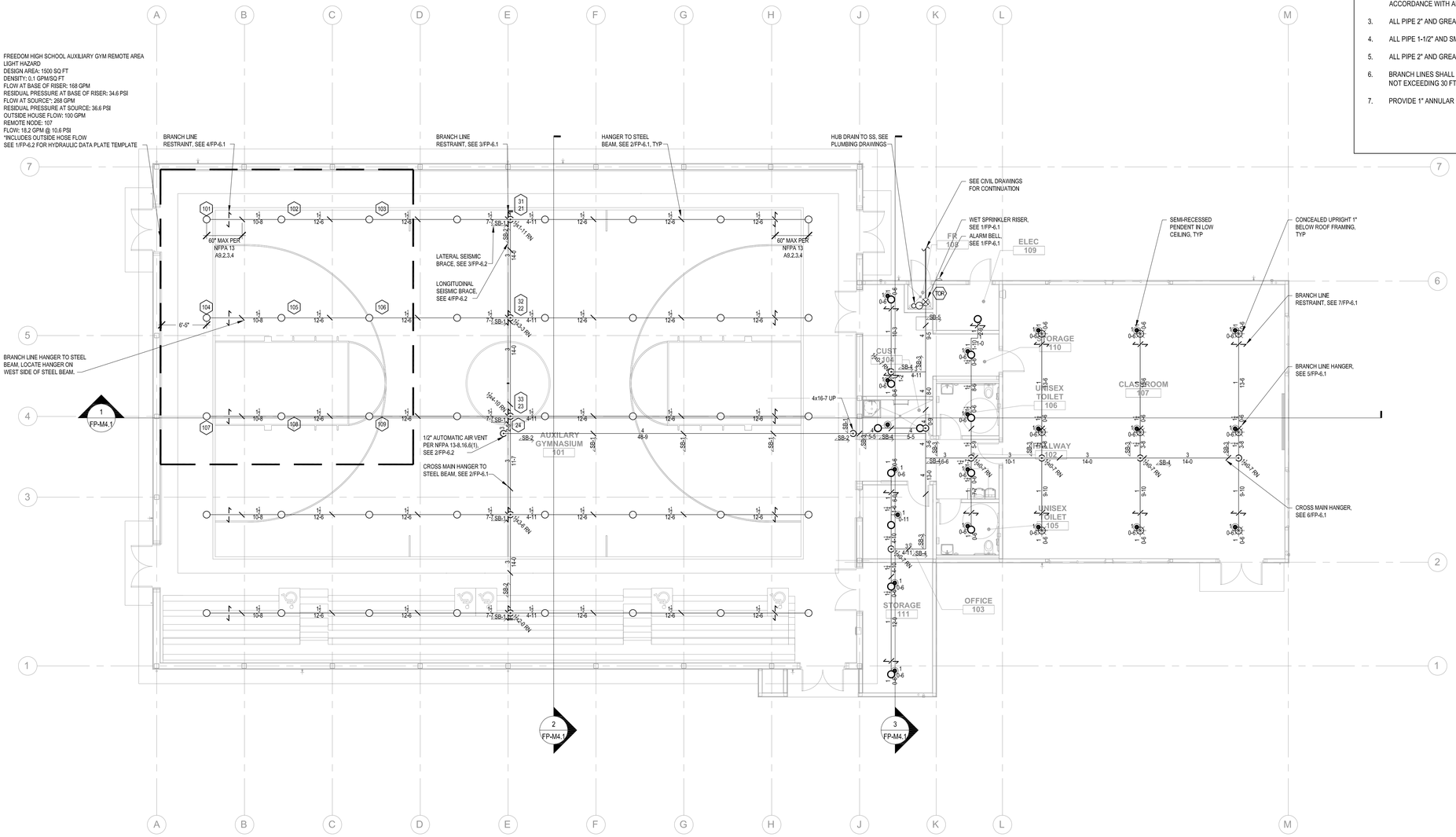

SPRINKLER									
SYMBOL	DESCRIPTION	MANF.	MODEL	SIN	TYPE	K FACTOR	TEMP RATING	QTY	NOTES
◉	RECESSED PENDENT	TYCO	TY-FRB	3231	SSP	5.6	155 °F	20	1, 2, 3, 4,
○	UPRIGHT ON BRANCH LINE	TYCO	TY-FRB	3131	SSU	5.6	155 °F	41	
O	UPRIGHT IN CONCEALED SPACE	TYCO	TY-FRB	3131	SSU	5.6	200 °F	13	
⊠	FLAT SPRAY UPRIGHT	TYCO	CC3	3199	FSU	5.6	155 °F	9	
TOTAL SPRINKLER (THIS SHEET)								83	
TOTAL SPRINKLERS JOB								83	

1. FINISH TO MATCH ADJACENT MATERIAL VERIFY WITH ARCHITECT
2. PROVIDE ON 401 EXTENSION
3. PROVIDE STYLE 10 RECESSED ESCUTCHEON. FINISH TO MATCH ADJACENT MATERIAL VERIFY WITH ARCHITECT
4. FOR LAY IN PANEL SUSPENDED CEILINGS PROVIDE 1" ANNULAR CLEARANCE AROUND RECESSED ESCUTCHEON. CONCEAL OVERSIZED HOLE WITH VIKING 1260 EXPANSION PLATE. FINISH TO MATCH ADJACENT MATERIAL VERIFY WITH ARCHITECT.

1 FP-M2.1 PIPING PLAN - FIRE PROTECTION

SCALE: 1/8" = 1'-0"

NORTH

REGISTERED PROFESSIONAL ENGINEER STEVEN E. RAWSON MECHANICAL EXP. JUNE 30, 2022 STATE OF CALIFORNIA

CEG JOB NO: 20118

CYPRESS Engineering Group
831.218.1802
8 Harris Court, Suite A8
Monterey, CA 93940
cypresseg.com
HVAC, Plumbing, Fire Protection
Building Commissioning
Industrial Refrigeration
Environmental Compliance
Training & Technical Support

QUATTROCCHI KWOK ARCHITECTS
Main:
636 Fifth Street, Santa Rosa, CA 95404
East Bay:
55 Harrison Street, Suite 525,
Oakland, CA 94607
(707) 576-0829

FREEDOM HIGH SCHOOL

NEW AUXILIARY GYMNASIUM

1050 NEROLY RD,
OAKLEY, CA 94561

LIBERTY UNION HIGH SCHOOL DISTRICT

REVISIONS

DSA APP NO. 01-119278

ARCH PROJECT NO: 1869.00
DRAWN BY: CAD
DRAWING SCALE: 1/8" = 1' - 0"
PTN: 61721-78 FILE NO: 7-H4

BID DOCUMENT

APRIL 27, 2021

SHEET TITLE

PIPING PLAN - FIRE PROTECTION

SHEET NUMBER

FP-M2.1

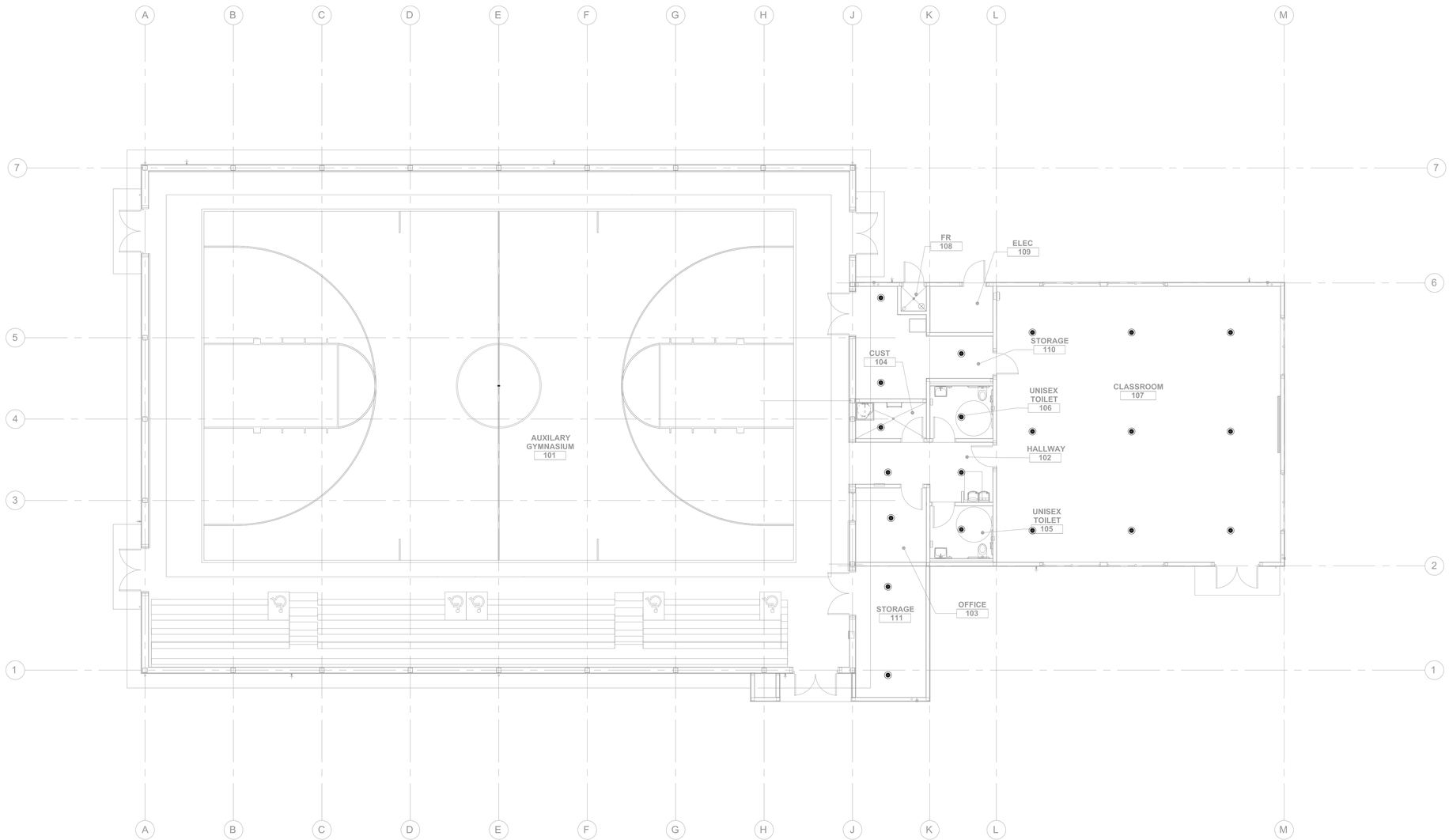

1
FP-M3.1

CEILING PLAN - FIRE PROTECTION

SCALE: 1/8" = 1'-0"

NORTH

QUATTROCCHI KWOK
ARCHITECTS
Main:
636 Fifth Street, Santa Rosa, CA 95404
East Bay:
55 Harrison Street, Suite 525,
Oakland, CA 94607
(707) 576-0829

FREEDOM HIGH SCHOOL

NEW AUXILIARY GYMNASIUM

1050 NEROLY RD,
OAKLEY, CA 94561

LIBERTY UNION
HIGH SCHOOL
DISTRICT

REVISIONS

DSA APP NO. 01-119278

ARCH PROJECT NO: 1869.00
DRAWN BY: CAD
DRAWING SCALE: 1/8" = 1' - 0"
PTN: 61721-78 FILE NO: 7-H4

BID DOCUMENT

APRIL 27, 2021

SHEET TITLE

CEILING PLAN - FIRE PROTECTION

SHEET NUMBER

FP-M3.1

CEG JOB NO: 20118

REGISTERED PROFESSIONAL ENGINEER
STEVEN E. RAWSON
EXP. JUNE 30, 2022
MECHANICAL
STATE OF CALIFORNIA

CYPRESS
Engineering Group
831.218.1802
8 Harris Court, Suite A8
Monterey, CA 93940
cypresseg.com

HVAC, Plumbing, Fire Protection
Building Commissioning
Industrial Refrigeration
Environmental Compliance
Training & Technical Support

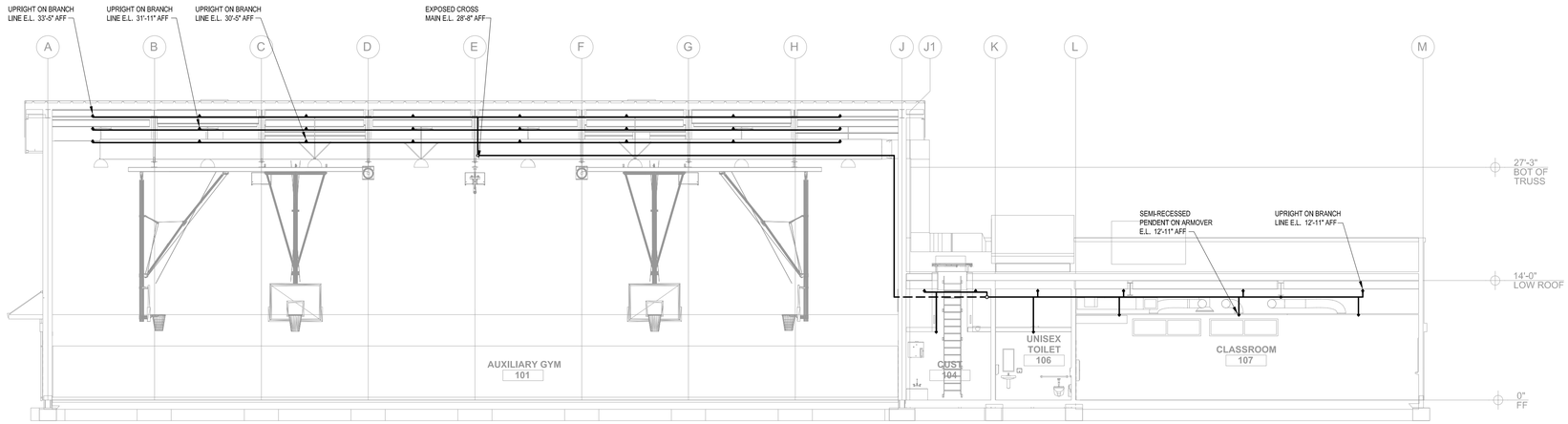

1 FP-M4.1 SECTIONS - FIRE PROTECTION

SCALE: 1/8" = 1'-0"

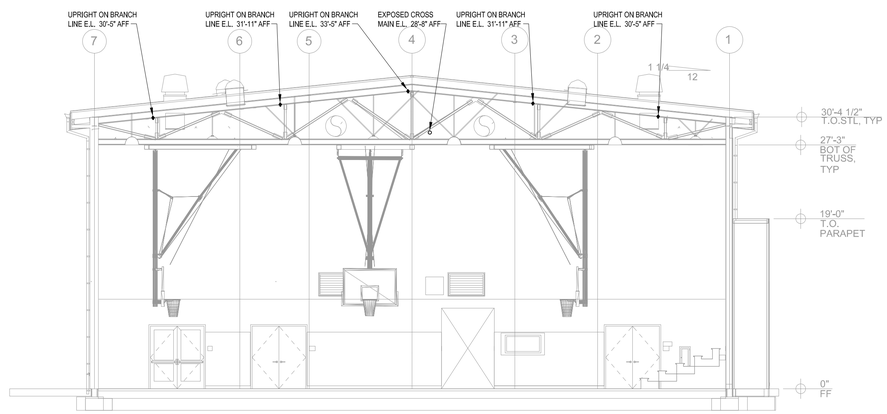

2 FP-M4.1 SECTIONS - FIRE PROTECTION

SCALE: 1/8" = 1'-0"

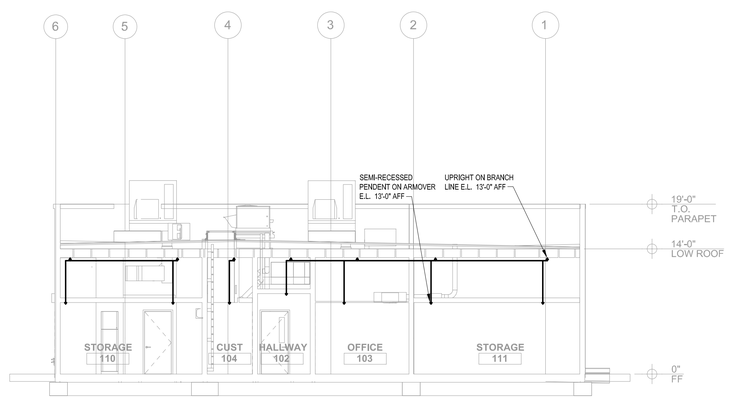

3 FP-M4.1 SECTIONS - FIRE PROTECTION

SCALE: 1/8" = 1'-0"

QUATTROCCHI KWOK ARCHITECTS
Main:
636 Fifth Street, Santa Rosa, CA 95404
East Bay:
55 Harrison Street, Suite 525,
Oakland, CA 94607
(707) 576-0829

FREEDOM HIGH SCHOOL

NEW AUXILIARY GYMNASIUM

1050 NEROLY RD,
OAKLEY, CA 94561

LIBERTY UNION HIGH SCHOOL DISTRICT

REVISIONS

DSA APP NO. 01-119278

ARCH PROJECT NO:	1869.00
DRAWN BY:	CAD
DRAWING SCALE:	1/8" = 1' - 0"
PTN: 61721-78	FILE NO: 7-H4

BID DOCUMENT

APRIL 27, 2021

SHEET TITLE

SECTIONS - FIRE PROTECTION

SHEET NUMBER

FP-M4.1

CEG JOB NO: 20118

REGISTERED PROFESSIONAL ENGINEER
STEVEN E. RAWSON
No. M-18 EXP. JUNE 30, 2022
MECHANICAL
STATE OF CALIFORNIA

CYPRESS Engineering Group
831.218.1802
8 Harris Court, Suite A8
Monterey, CA 93940
cypresseg.com

HVAC, Plumbing, Fire Protection
Building Commissioning
Industrial Refrigeration
Environmental Compliance
Training & Technical Support

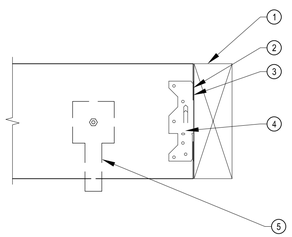

DETAIL NOTES:

1. WOOD FRAMING
2. 2x, MIN BLOCKING TO MATCH DEPTH OF JOIST FOR PIPE SIZE UP TO 2"
3. 3x, MIN. BLOCKING TO MATCH DEPTH OF JOIST FOR PIPE SIZE UP TO AND INCLUDING 6"
4. SIMPSON A35 HANGER, EACH END
5. SEE REQUIRED HANGER OR BRACING DETAIL FOR CONNECTION

9 WOOD FRAMING BLOCKING N.T.S.

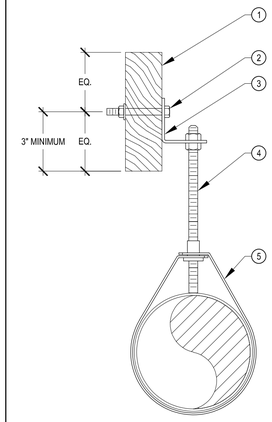

DETAIL NOTES:

1. MIN. 3x WOOD STRUCTURE. PROVIDE BLOCKING WHEN 3x OR GREATER STRUCTURE IS NOT AVAILABLE. SEE DETAIL 9/FP-6.1
2. 1/2" THROUGH-BOLT
3. TOLCO FIG. 51 SIDE BEAM BRACKET
4. 3/8" TOLCO FIG. 100 ALL THREAD ROD
5. TOLCO FIG 200 ADJUSTABLE RING HANGER

6 RING HANGER N.T.S.

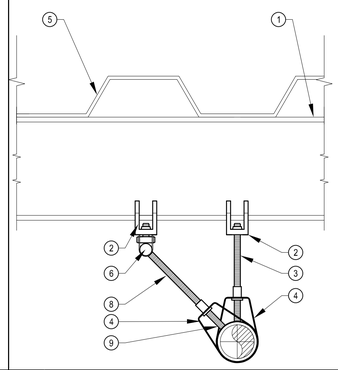

DETAIL NOTES:

1. STEEL BEAM , SEE STRUCTURAL DRAWINGS
2. TOLCO FIG 65 BEAM CLAMP
3. 3/8" TOLCO FIG. 100 HANGER ROD WITHIN 6" OF RESTRAINT ROD IN ACCORDANCE WITH NFPA13-9.3.6.1
4. TOLCO FIG 200 BAND HANGER
5. STEEL BEAM , SEE STRUCTURAL DRAWINGS
6. METAL DECKING
7. TOLCO FIG 75 SWIVEL ATTACHMENT
8. 3/8" TOLCO FIG 100 RESTRAINT ROD
9. EXTEND ROD TO PIPE TYPICAL.

3 BRANCH LINE RESTRAINT N.T.S.

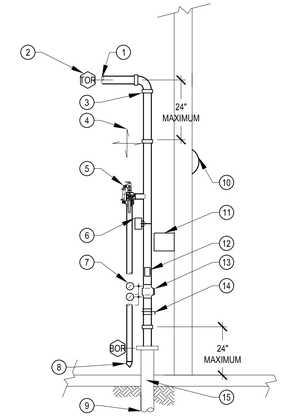

DETAIL NOTES:

1. TO SYSTEM, SEE SPRINKLER PIPING PLAN
2. HYDRAULIC CALCULATION NODE, TYP
3. FLEXIBLE COUPLING, TYP
4. 4-WAY BRACE, SEE 8/FP-6.1
5. 2" TESTANDRAIN MODEL 1011A WITH MODEL 7000 PRESSURE RELIEVE VALVE SET AT 175 PSI
6. FLOW SWITCH
7. PRESSURE GAGE, TYP
8. PROVIDE TERMINATION WITH 45° EL TO SMOOTH BORE CORROSION-RESISTANT OUTLET GIVING FLOW EQUIVALENT TO ONE SPRINKLER FOR ALARM TEST IN ACCORDANCE WITH NFPA 13-8.17.4.2.4. DAYLIGHT OVER HUB DRAIN, SEE PLUMBING DRAWINGS.
9. SEE 1/FP0.1 FOR UNDERGROUND RISER
10. 10" 120V ALARM BELL
11. SPARE HEAD CABINET
12. HYDRAULIC DATA PLATE
13. TYCO CV-1FR UL LISTED CHECK VALVE
14. BUTTERFLY INDICATING VALVE WITH TAMPER SWITCH
15. FILL ANNULAR CLEARANCE WITH FLEXIBLE FIRE CAULK, SEE 1/FP0.1

1 WET RISER N.T.S.

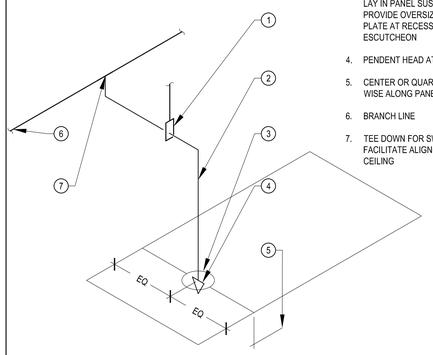

DETAIL NOTES:

1. HANGER FOR ARMOVER GREATER THAN 2FT
2. 1" SCH 40 HARD PIPE TYPICAL
3. PROVIDE 1' ANNULAR CLEARANCE AT ALL SPRINKLER PENETRATIONS OF LAY IN PANEL SUSPENDED CEILINGS. PROVIDE OVERSIZED EXPANSION PLATE AT RECESSED SPRINKLER ESCUTCHEON
4. PENDENT HEAD AT LOW CEILINGS
5. CENTER OR QUARTER POINT LENGTH WISE ALONG PANEL
6. BRANCH LINE
7. TEE DOWN FOR SWING ARMOVER TO FACILITATE ALIGNMENT AT LOW CEILING

10 TYPICAL DROP TO CEILING N.T.S.

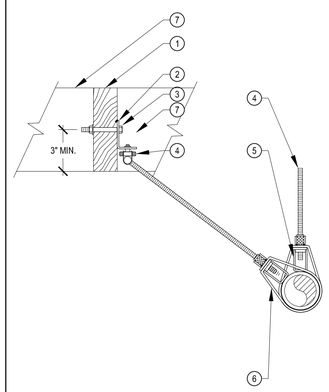

DETAIL NOTES:

1. MIN. 3x WOOD STRUCTURE. PROVIDE BLOCKING WHEN 3x OR GREATER STRUCTURE IS NOT AVAILABLE. SEE DETAIL 9/FP-6.1
2. TOLCO FIG. 51 SIDE BEAM BRACKET
3. 1/2" THROUGH-BOLT
3. TOLCO FIG 75 SWIVEL ATTACHMENT
4. SEE 5/FP-6.2 FOR HANGER ATTACHMENT
5. TOLCO FIG 25 SURGE ARRESTOR AT RESTRAINT LOCATION PER NFPA 13-9.3.6.2
6. TOLCO FIG 200 ADJUSTABLE RING HANGER
7. PROVIDE FULL DEPTH 2X BLOCKING BOTH SIDES.

7 BRANCH LINE RESTRAINT N.T.S.

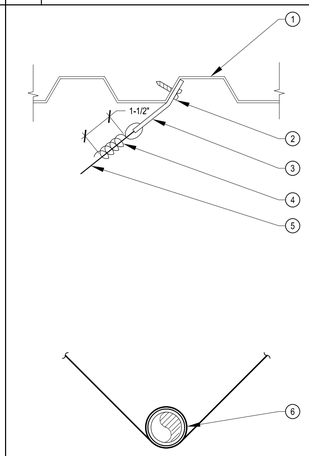

DETAIL NOTES:

1. METAL DECKING, SEE STRUCTURAL DRAWINGS
2. TWO #8 X 1/2" SELF TAPPING SCREWS
3. 10GA, GALVANIZED STEEL STRAPS 3" WIDE x4" LONG
4. FOUR TIGHT TURNS
5. NO. 12, 440 LBS RESTRAINT WIRE INSTALLED AT LEAST 45° FROM VERTICAL AND ANCHORED ON BOTH SIDES OF PIPE.
6. TWO TIGHT TURNS PER NFPA-13-A9.3.6.1.

4 RESTRAINT WIRE N.T.S.

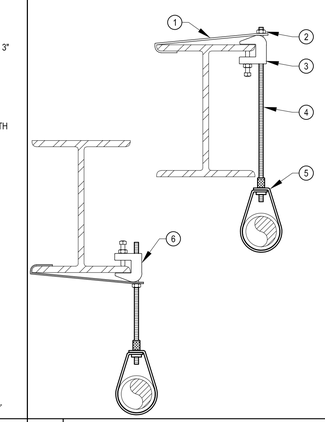

DETAIL NOTES:

1. TOLCO FIG. 69 RETAINING STRAP
2. LOCK NUT REQ'D
3. TOLCO FIG. 65 BEAM CLAMP TO TOP TO TOP FLANGE
4. 3/8" TOLCO FIG. 100 THREADED ROD
5. TOLCO FIG. 200 ADJUSTABLE RING HANGER
6. ALTERNATE BEAM CLAP LOCATION AT BOTTOM FLANGE WHERE DECK PROFILE DOES NOT ALLOW

2 RING HANGER N.T.S.

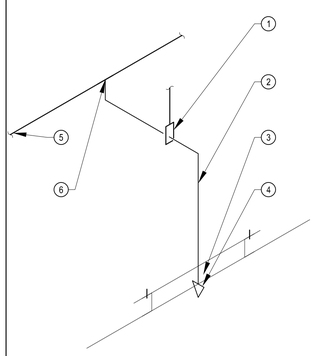

DETAIL NOTES:

1. HANGER FOR ARMOVER GREATER THAN 2FT
2. CONTRACTOR MAY PROVIDE OPTIONAL FLEX HEAD 2072F FLEXIBLE (1.25 IN I.D.) SPRINKLER HOSE WITH STUD MOUNTING BRACKET FOR HARD CEILING APPLICATION
3. FLEXHEAD STUD MOUNTING BRACKET FOR OPTIONAL HOSE APPLICATION
4. PENDENT HEAD AT LOW CEILINGS
5. BRANCH LINE
6. TEE DOWN FOR SWING ARMOVER TO FACILITATE ALIGNMENT AT LOW CEILING

11 DROP HARD CEILING N.T.S.

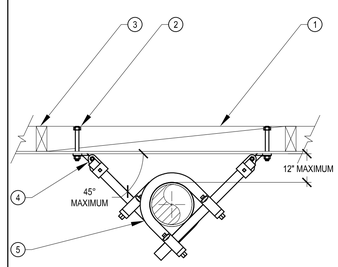

DETAIL NOTES:

1. PROVIDE 4X BLOCKING W/A34 TOP AND BOTTOM AT EACH END
2. 1/2" Ø GALV, THROUGH BOLT
3. WALL FRAMING
4. TOLCO FIG 909 SWIVEL
5. TOLCO 1001 FAST CLAMP SWAY BRACE ATTACHMENT

8 RISER BRACE N.T.S.

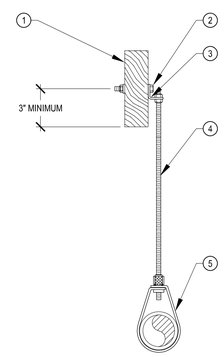

DETAIL NOTES:

1. MIN. 3x WOOD STRUCTURE. PROVIDE BLOCKING WHEN 3x OR GREATER STRUCTURE IS NOT AVAILABLE. SEE DETAIL 9/FP-6.1.
2. 3/8" THROUGH BOLT
3. TOLCO FIG. 58 THREADED SIDE BEAM BRACKET
4. 3/8" TOLCO FIG. 100 ALL THREAD ROD
5. TOLCO FIG. 200 RING HANGER

NOTE: FOR PIPE SIZES UP TO AND INCLUDING 2"

5 RING HANGER N.T.S.

QUATTROCCHI KWOK ARCHITECTS
Main:
636 Fifth Street, Santa Rosa, CA 95404
East Bay:
55 Harrison Street, Suite 525,
Oakland, CA 94607
(707) 576-0829

FREEDOM HIGH SCHOOL

NEW AUXILIARY GYMNASIUM

1050 NEROLY RD,
OAKLEY, CA 94561

LIBERTY UNION HIGH SCHOOL DISTRICT

REVISIONS

DSA APP NO. 01-119278

ARCH PROJECT NO:	1869.00
DRAWN BY:	CAD
DRAWING SCALE:	NONE
PTN: 61721-78	FILE NO: 7-H4

BID DOCUMENT

APRIL 27, 2021

SHEET TITLE

DETAILS - FIRE PROTECTION

SHEET NUMBER

FP-6.1

REGISTERED PROFESSIONAL ENGINEER
STEVEN E. RAWDON
EXP. JUNE 30, 2022
MECHANICAL
STATE OF CALIFORNIA

CEG JOB NO: 20118

CYPRESS Engineering Group
831.218.1802
8 Harris Court, Suite A8
Monterey, CA 93940
cypresseg.com
HVAC, Plumbing, Fire Protection
Building Commissioning
Industrial Refrigeration
Environmental Compliance
Training & Technical Support

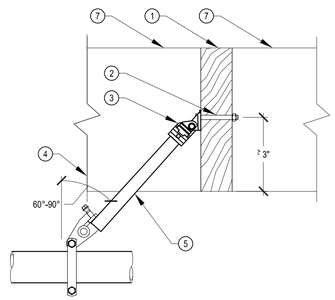

DETAIL NOTES:

1. MIN. 4X WOOD BLOCKING. PROVIDE BLOCKING WHEN 4X OR GREATER STRUCTURE IS NOT AVAILABLE, SEE 9/FP-6.1.
2. MIN 1/2' THROUGH BOLT PER NFPA 13 FIGURE 9.3.5.12.1
3. TOLCO FIG 909 NO-THREAD SWIVEL SWAY BRACE ATTACHMENT.
4. WOOD JOIST PER PLAN.
5. 1" SCHEDULE 40 BRACE PIPE, SEE SEISMIC BRACING CALCULATION FOR SIZE.
6. TOLCO FIG FIG 4L IN-LINE SWAY BRACE ATTACHMENT.
7. PROVIDE FULL DEPTH 2X BLOCKING BOTH SIDES.

6 LONGITUDINAL SEISMIC BRACE SB-4 N.T.S.

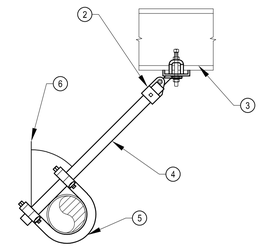

DETAIL NOTES:

1. TOLCO FIG 800 SWAY BRACE ATTACHMENT TO STEEL I-BEAM
2. TOLCO FIG. 909 NO-TREAD SWIVEL SWAY BRACE ATTACHMENT
3. STEEL BEAM, SEE STRUCTURAL DRAWINGS
4. 1" SCHD. 40 BRACE PIPE
5. TOLCO FIG. 1001 SWAY BRACE ATTACHMENT
6. 60°-90°

3 LATERAL SEISMIC BRACE SB-1 N.T.S.

HYDRAULIC - SYSTEM

THIS BUILDING IS PROTECTED BY A HYDRAULIC DESIGN AUTOMATIC SPRINKLER SYSTEM

LOCATION: _____

SPRINKLER INFORMATION

NUMBER OF FLOWING SPRINKLERS: _____ PROTECTION AREA PER SPRINKLER: _____

MANUFACTURER: _____ MODEL: _____ TEMPERATURE: _____

TYPE: _____ K-FACTOR: _____

ORIFICE: _____

BASIS OF DESIGN

STANDARD: NFPA 13, 2016 EDITION HAZARD GROUP: _____

DENSITY: _____ DESIGN AREA OF DISCHARGE: _____

SYSTEM DEMAND

FLOW AT THE BASE OF THE RISER THE BASE OF THE RISER: _____

RESIDUAL PRESSURE AT THE BASE OF THE RISER: _____

REQUIRED FLOW AT THE SOURCE: _____

REQUIRED PRESSURE AT THE SOURCE: _____

HOSE STREAM ALLOWANCE:
INSIDE: _____
OUTSIDE: _____
TOTAL

REMOTE SPRINKLER FLOW
GPM: _____ @: _____

NOTE: SEE FP-2.1 FOR HYDRAULIC DATA PLATE INFORMATION

1 HYDRAULIC DATA PLATE TEMPLATE N.T.S.

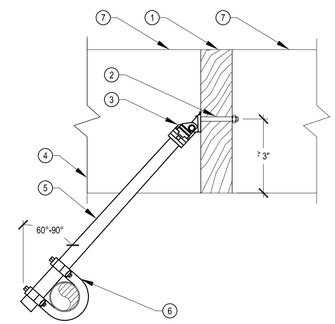

DETAIL NOTES:

1. MIN. 4X WOOD BLOCKING. PROVIDE BLOCKING WHEN 4X OR GREATER STRUCTURE IS NOT AVAILABLE, SEE 9/FP-6.1.
2. MIN 1/2' THROUGH BOLT PER NFPA 13 FIGURE 9.3.5.12.1
3. TOLCO FIG 909 NO-THREAD SWIVEL SWAY BRACE ATTACHMENT.
4. WOOD JOIST PER PLAN.
5. 1" SCHEDULE 40 BRACE PIPE, SEE SEISMIC BRACING CALCULATION FOR SIZE.
6. TOLCO FIG 1001 SWAY BRACE ATTACHMENT.
7. PROVIDE FULL DEPTH 2X BLOCKING BOTH SIDES

7 LATERAL SEISMIC BRACE SB-5 N.T.S.

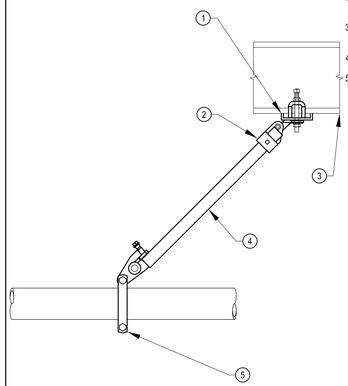

DETAIL NOTES:

1. TOLCO FIG 800 SWAY BRACE ATTACHMENT TO STEEL I-BEAM
2. TOLCO FIG. 909 NO-TREAD SWIVEL SWAY BRACE ATTACHMENT
3. STEEL BEAM, SEE STRUCTURAL DRAWINGS
4. 1" SCH. 40 BRACE PIPE
5. FIG. 4L LONGITUDINAL IN-LINE SWAY BRACE

4 LONGITUDINAL SEISMIC BRACE SB-2 N.T.S.

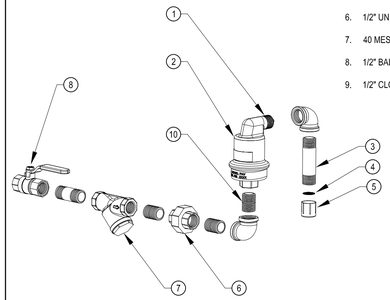

DETAIL NOTES:

1. 1/2" MALE NPT DRAIN CONNECTION
2. POTTERS PAY 175 PSI AIR VENT VALVE
3. 1/2"x2" NIPPLE
4. SCREEN
5. CAP
6. 1/2" UNION CONNECTION
7. 40 MESS STRAINER
8. 1/2" BALL VALVE
9. 1/2" CLOSE NIPPLE, TYP

NOTE: CLOSE VALVE AND CAP AFTER SYSTEM PURGING IS COMPLETE

2 AIR VENT N.T.S.

Sprinkler System - General Information

For: _____

Pipe Scheduled System: ☐ YES ☐ NO
High Piled Storage: ☐ YES ☐ NO
Rack Storage: ☐ YES ☐ NO
Commodity Class: _____
Max Storage Height: _____ ft m
Aisle Width (min): _____ ft m
Encapsulation: ☐ YES ☐ NO
Solid Shelving: ☐ YES ☐ NO
Flammable/Combustible Liquids: ☐ YES ☐ NO
Other Storage ☐ YES ☐ NO
_____
Hazardous Material: ☐ YES ☐ NO
Idle pallets: ☐ YES ☐ NO
Antifreeze Systems ☐ YES ☐ NO
Location: _____
Dry or Aux Systems ☐ YES ☐ NO
Location: _____

Date: _____
Flow Test Date: _____
Static: _____ psi bar
Residual: _____ psi bar
Flow: _____ gpm lpm
Pitot: _____ psi bar
Date: _____
Location: _____
_____
Location of Aux/low point drain _____
_____
_____
_____
Dry pipe/double interlock preaction valves test results:
_____
Original main drain test results:
Static: _____ psi bar
Residual: _____ psi bar
Venting Valve location: _____

Where injection systems are used to treat MIC or corrosion:
Type of chemical: Concentration: For purpose of disposal, see:
_____
Name of contractor or designer: _____
Address: _____
Phone: _____

8 GENERAL INFORMATION SIGN TEMPLATE

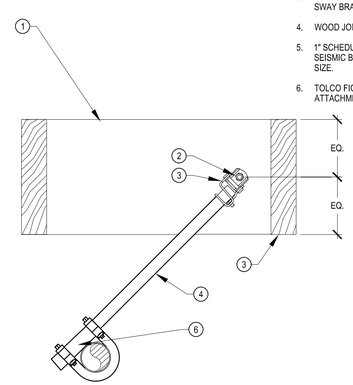

DETAIL NOTES:

1. 4X WOOD BLOCKING, SEE 9/FP-6.1.
2. 1/2' THROUGH BOLT.
3. TOLCO FIG 909 NO-THREAD SWIVEL SWAY BRACE ATTACHMENT.
4. WOOD JOIST PER PLAN.
5. 1" SCHEDULE 40 BRACE PIPE, SEE SEISMIC BRACING CALCULATION FOR SIZE.
6. TOLCO FIG 1001 SWAY BRACE ATTACHMENT.

5 LATERAL SEISMIC BRACE SB-3 N.T.S.

REGISTERED PROFESSIONAL ENGINEER
STEVEN E. RAYMOND
No. M-18 EXP. JUNE 30, 2022
MECHANICAL
STATE OF CALIFORNIA

CEG JOB NO: 20118

CYPRESS Engineering Group
831.218.1802
8 Harris Court, Suite A8
Monterey, CA 93940
cypresseg.com
HVAC, Plumbing, Fire Protection
Building Commissioning
Industrial Refrigeration
Environmental Compliance
Training & Technical Support

QUATTROCCHI KWOK ARCHITECTS
Main:
636 Fifth Street, Santa Rosa, CA 95404
East Bay:
55 Harrison Street, Suite 525,
Oakland, CA 94607
(707) 576-0829

FREEDOM HIGH SCHOOL

NEW AUXILIARY GYMNASIUM

1050 NEROLY RD,
OAKLEY, CA 94561

LIBERTY UNION HIGH SCHOOL DISTRICT

REVISIONS

DSA APP NO. 01-119278

ARCH PROJECT NO: 1869.00
DRAWN BY: CAD
DRAWING SCALE: NONE
PTN: 61721-78 FILE NO: 7-H4

BID DOCUMENT

APRIL 27, 2021

SHEET TITLE

DETAILS - FIRE PROTECTION

SHEET NUMBER

FP-6.2

Seismic Bracing Calculations

Sheet X of X

Project: FREEDOM HIGH SCHOOL NEW AUXILIARY GYMNASIUM
Address: 1050 NEROLY RD OAKLEY, CA 94561

Cypress Engineering Group
8 Harris Ct., Suite A8
Monterey, CA 93940
(831) 218 - 1802

Brace Information

Maximum Spacing: 20'-0"
Maximum Brace Length: 7'-0"
Bracing Material: 1" Sch. 40
Angle from Vertical: 60° MINIMUM
Least radius of gyration:* 0.421"
L/R value:* 200
Maximum Horizontal load: NFPA 13: Table 9.3.5.11.8(b) 1604 lbs

Seismic Brace Attachments

Structure attachment or tension-only bracing system:
Make: TOLCO Model: FIG 909 NO THREAD SWIVEL
Listed load rating: 2015 Adjusted load rating: 1745
Sway brace (pipe attachment) fitting:
Make: TOLCO Model: FIG 1001 IN-LINE SWAY BRACE
Listed load rating: 2015 Adjusted load rating: 1745

Fastener Information

Orientation of connecting surface: NFPA Type F
Type: THROUGH BOLT
Diameter: 1/2 in
Length: 3 1/2 in
Maximum load: 600 lbs
NFPA 13: Figure 9.3.5.12.1

Seismic Brace Assembly Detail
(Provide detail on plans)

SEE DETAIL 7/FP-6.2 SEE DETERMINATION OF SEISMIC COEFFICIENT Cp ON FP-0.1

Brace identification no. (to be used on plans) SB-5

[X] Lateral brace [ ] Longitudinal brace

Seismic Coefficient Cp= 0.65 (See Attached NFPA13: Table 9.3.5.9.3)

Diameter	Type	Length	Total (ft)	Weight per ft	Total Weight
4 in	Sch. 10 Steel	.	20	11.78 lb/ft	235.6 lb
.	.	.	.	. lb/ft	. lb
.	.	.	.	. lb/ft	. lb
.	.	.	.	. lb/ft	. lb
.	.	.	.	. lb/ft	. lb
.	.	.	.	. lb/ft	. lb
Total Weight of Water Filled Piping					235.6 lb
Wp (Total Weight of Water Filled Piping x 1.15 to account for valves and fittings)					270.9 lb
Horizontal Force (NFPA13.9.3.5.9.3) Fpw = Cp x Wp =					176.1 lb

*Excludes tension-only bracing systems

Seismic Bracing Calculations

Sheet X of X

Project: FREEDOM HIGH SCHOOL NEW AUXILIARY GYMNASIUM
Address: 1050 NEROLY RD OAKLEY, CA 94561

Cypress Engineering Group
8 Harris Ct., Suite A8
Monterey, CA 93940
(831) 218 - 1802

Brace Information

Maximum Spacing: 15'-0"
Maximum Brace Length: 7'-0"
Bracing Material: 1" Sch. 40
Angle from Vertical: 60° MINIMUM
Least radius of gyration:* 0.421"
L/R value:* 200
Maximum Horizontal load: NFPA 13: Table 9.3.5.11.8(b) 1604 lbs

Seismic Brace Attachments

Structure attachment or tension-only bracing system:
Make: TOLCO Model: FIG 909 NO THREAD SWIVEL
Listed load rating: 2015 Adjusted load rating: 1745
Sway brace (pipe attachment) fitting:
Make: TOLCO Model: FIG 1001 IN-LINE SWAY BRACE
Listed load rating: 2015 Adjusted load rating: 1745

Fastener Information

Orientation of connecting surface: NFPA Type I
Type: THROUGH BOLT
Diameter: 1/2 in
Length: 3 1/2 in
Maximum load: 485 lbs
NFPA 13: Figure 9.3.5.12.1

Seismic Brace Assembly Detail
(Provide detail on plans)

SEE DETAIL 5/FP-6.2 SEE DETERMINATION OF SEISMIC COEFFICIENT Cp ON FP-0.1

Brace identification no. (to be used on plans) SB-3

[X] Lateral brace [ ] Longitudinal brace

Seismic Coefficient Cp= 0.65 (See Attached NFPA13: Table 9.3.5.9.3)

Diameter	Type	Length	Total (ft)	Weight per ft	Total Weight
3 in	Sch. 10 Steel	.	15	7.94 lb/ft	119.1 lb
1.5 in	Sch. 40 Steel	.	7	3.61 lb/ft	25.3 lb
1.25 in	Sch. 40 Steel	.	15	2.93 lb/ft	43.9 lb
1 in	Sch. 40 Steel	.	37.5	2.05 lb/ft	76.9 lb
.	.	.	.	. lb/ft	. lb
.	.	.	.	. lb/ft	. lb
Total Weight of Water Filled Piping					265.2 lb
Wp (Total Weight of Water Filled Piping x 1.15 to account for valves and fittings)					304.9 lb
Horizontal Force (NFPA13.9.3.5.9.3) Fpw = Cp x Wp =					198.2 lb

*Excludes tension-only bracing systems

Seismic Bracing Calculations

Sheet X of X

Project: FREEDOM HIGH SCHOOL NEW AUXILIARY GYMNASIUM
Address: 1050 NEROLY RD OAKLEY, CA 94561

Cypress Engineering Group
8 Harris Ct., Suite A8
Monterey, CA 93940
(831) 218 - 1802

Brace Information

Maximum Spacing: 15'-0"
Maximum Brace Length: 7'-0"
Bracing Material: 1" Sch. 40
Angle from Vertical: 60° MINIMUM
Least radius of gyration:* 0.421"
L/R value:* 200
Maximum Horizontal load: NFPA 13: Table 9.3.5.11.8(b) 1604 lbs

Seismic Brace Attachments

Structure attachment or tension-only bracing system:
Make: TOLCO Model: FIG 909 NO THREAD SWIVEL
Listed load rating: 2015 Adjusted load rating: 1745
Sway brace (pipe attachment) fitting:
Make: TOLCO Model: FIG 1001 IN-LINE SWAY BRACE
Listed load rating: 2015 Adjusted load rating: 1745

Fastener Information

Orientation of connecting surface: NFPA Type C
Type: THROUGH BOLT
Diameter: 1/2 in
Length: 1/2 in
Maximum load: 2550 lbs
NFPA 13: Figure 9.3.5.12.1

Seismic Brace Assembly Detail
(Provide detail on plans)

SEE DETAIL 3/FP-6.2 SEE DETERMINATION OF SEISMIC COEFFICIENT Cp ON FP-0.1

NOTE: LOAD LIMITED BY FIG 800 SWAY BRACE ATTACHMENT. LOAD ALONG BEAM 1265 LBS

Brace identification no. (to be used on plans) SB-1

[X] Lateral brace [ ] Longitudinal brace

Seismic Coefficient Cp= 0.65 (See Attached NFPA13: Table 9.3.5.9.3)

Diameter	Type	Length	Total (ft)	Weight per ft	Total Weight
3 in	Sch. 10 Steel	.	15	7.94 lb/ft	119.1 lb
1.5 in	Sch. 40 Steel	.	87.5	3.61 lb/ft	315.9 lb
.	.	.	.	. lb/ft	. lb
.	.	.	.	. lb/ft	. lb
.	.	.	.	. lb/ft	. lb
.	.	.	.	. lb/ft	. lb
Total Weight of Water Filled Piping					435.0 lb
Wp (Total Weight of Water Filled Piping x 1.15 to account for valves and fittings)					500.2 lb
Horizontal Force (NFPA13.9.3.5.9.3) Fpw = Cp x Wp =					325.1 lb

*Excludes tension-only bracing systems

Seismic Bracing Calculations

Sheet X of X

Project: FREEDOM HIGH SCHOOL NEW AUXILIARY GYMNASIUM
Address: 1050 NEROLY RD OAKLEY, CA 94561

Cypress Engineering Group
8 Harris Ct., Suite A8
Monterey, CA 93940
(831) 218 - 1802

Brace Information

Maximum Spacing: 30'-0"
Maximum Brace Length: 7'-0"
Bracing Material: 1" Sch. 40
Angle from Vertical: 60° MINIMUM
Least radius of gyration:* 0.421"
L/R value:* 200
Maximum Horizontal load: NFPA 13: Table 9.3.5.11.8(b) 1604 lbs

Seismic Brace Attachments

Structure attachment or tension-only bracing system:
Make: TOLCO Model: FIG 909 NO THREAD SWIVEL
Listed load rating: 2015 Adjusted load rating: 1745
Sway brace (pipe attachment) fitting:
Make: TOLCO Model: FIG 4L IN-LINE SWAY BRACE
Listed load rating: 2015 Adjusted load rating: 1745

Fastener Information

Orientation of connecting surface: NFPA Type F
Type: THROUGH BOLT
Diameter: 1/2 in
Length: 3 1/2 in
Maximum load: 600 lbs
NFPA 13: Figure 9.3.5.12.1

Seismic Brace Assembly Detail
(Provide detail on plans)

SEE DETAIL 6/FP-6.2 SEE DETERMINATION OF SEISMIC COEFFICIENT Cp ON FP-0.1

Brace identification no. (to be used on plans) SB-4

[ ] Lateral brace [X] Longitudinal brace

Seismic Coefficient Cp= 0.65 (See Attached NFPA13: Table 9.3.5.9.3)

Diameter	Type	Length	Total (ft)	Weight per ft	Total Weight
4 in	Sch. 10 Steel	.	30	11.78 lb/ft	353.4 lb
.	.	.	.	. lb/ft	. lb
.	.	.	.	. lb/ft	. lb
.	.	.	.	. lb/ft	. lb
.	.	.	.	. lb/ft	. lb
.	.	.	.	. lb/ft	. lb
Total Weight of Water Filled Piping					353.4 lb
Wp (Total Weight of Water Filled Piping x 1.15 to account for valves and fittings)					406.4 lb
Horizontal Force (NFPA13.9.3.5.9.3) Fpw = Cp x Wp =					264.2 lb

*Excludes tension-only bracing systems

Seismic Bracing Calculations

Sheet X of X

Project: FREEDOM HIGH SCHOOL NEW AUXILIARY GYMNASIUM
Address: 1050 NEROLY RD OAKLEY, CA 94561

Cypress Engineering Group
8 Harris Ct., Suite A8
Monterey, CA 93940
(831) 218 - 1802

Brace Information

Maximum Spacing: 60'-0"
Maximum Brace Length: 7'-0"
Bracing Material: 1" Sch. 40
Angle from Vertical: 60° MINIMUM
Least radius of gyration:* 0.421"
L/R value:* 200
Maximum Horizontal load: NFPA 13: Table 9.3.5.11.8(b) 1604 lbs

Seismic Brace Attachments

Structure attachment or tension-only bracing system:
Make: TOLCO Model: FIG 909 NO THREAD SWIVEL
Listed load rating: 2015 Adjusted load rating: 1745
Sway brace (pipe attachment) fitting:
Make: TOLCO Model: FIG 4L IN-LINE SWAY BRACE
Listed load rating: 2015 Adjusted load rating: 1745

Fastener Information

Orientation of connecting surface: NFPA Type C
Type: THROUGH BOLT
Diameter: 1/2 in
Length: 1/2 in
Maximum load: 2550 lbs
NFPA 13: Figure 9.3.5.12.1

Seismic Brace Assembly Detail
(Provide detail on plans)

SEE DETAIL 4/FP-6.2 SEE DETERMINATION OF SEISMIC COEFFICIENT Cp ON FP-0.1

NOTE: LOAD LIMITED BY FIG 800 SWAY BRACE ATTACHMENT. LOAD ALONG BEAM 1265 LBS

Brace identification no. (to be used on plans) SB-2

[ ] Lateral brace [X] Longitudinal brace

Seismic Coefficient Cp= 0.65 (See Attached NFPA13: Table 9.3.5.9.3)

Diameter	Type	Length	Total (ft)	Weight per ft	Total Weight
4 in	Sch. 10 Steel	.	60	11.78 lb/ft	706.80 lb
.	.	.	.	. lb/ft	. lb
.	.	.	.	. lb/ft	. lb
.	.	.	.	. lb/ft	. lb
.	.	.	.	. lb/ft	. lb
.	.	.	.	. lb/ft	. lb
Total Weight of Water Filled Piping					706.80 lb
Wp (Total Weight of Water Filled Piping x 1.15 to account for valves and fittings)					934.74 lb
Horizontal Force (NFPA13.9.3.5.9.3) Fpw = Cp x Wp =					607.58 lb

*Excludes tension-only bracing systems

CEG JOB NO: 20118

REGISTERED PROFESSIONAL ENGINEER STEVEN E. RAWSON No. M36657 EXP. JUNE 30, 2022 MECHANICAL STATE OF CALIFORNIA

CYPRESS Engineering Group
831.218.1802
8 Harris Court, Suite A8
Monterey, CA 93940
cypresseg.com

HVAC, Plumbing, Fire Protection
Building Commissioning
Industrial Refrigeration
Environmental Compliance
Training & Technical Support

QUATTROCCHI KWOK ARCHITECTS
Main:
636 Fifth Street, Santa Rosa, CA 95404
East Bay:
55 Harrison Street, Suite 525,
Oakland, CA 94607
(707) 576-0829

FREEDOM HIGH SCHOOL

NEW AUXILIARY GYMNASIUM

1050 NEROLY RD, OAKLEY, CA 94561

LIBERTY UNION HIGH SCHOOL DISTRICT

REVISIONS

DSA APP NO. 01-119278
ARCH PROJECT NO: 1869.00
DRAWN BY: CAD
DRAWING SCALE: NONE
PTN: 61721-78 FILE NO: 7-H4
BID DOCUMENT
APRIL 27, 2021

SHEET TITLE
SEISMIC BRACING CALCULATIONS - FIRE PROTECTION

SHEET NUMBER
FP-6.3

AV PANEL SCHEDULE							
DEVICE TYPE	LOCATION	DESCRIPTION	PANEL SIZE-FLUSH MOUNT	PANEL SIZE-SURFACE MOUNT	BOX TYPE-FLUSH MOUNT	BOX TYPE-SURFACE MOUNT	WIRING CONNECTION
AV-G1 -- / AV-G3 -- / AV-G4 -- / AV-G6 -- / AV-G7 -- / AV-G8 --	GYM / CLASSROOM	MULTI-PANEL	3-GANG	3-GANG	3-GANG DOUBLE-DEPTH BOX	DOUBLE-DEPTH 3-GANG BELL WEATHERPROOF BOX	HOME RUN TO AV RACK
AV-G2 -- / AV-G5 --	GYM	MULTI-PANEL	5-GANG	5-GANG	5-GANG DOUBLE-DEPTH BOX	DOUBLE-DEPTH 5-GANG BELL WEATHERPROOF BOX	HOME RUN TO AV RACK
JB-1 --	GYM	J-BOX	6X6 BLANK	6X6 BLANK	NEMA TYPE 1 6X6X6	NEMA TYPE 1 6X6X6	HOME RUN TO AV RACK
RK-1 --	STORAGE	J-BOX AT EQUIPMENT RACK	N/A	N/A	NEMA TYPE 1 12X12X6	NEMA TYPE 1 12X12X6	HOME RUN TO AV RACK
WX --	GYM / CLASSROOM	WIRELESS MIC ANTENNA	1-GANG	1-GANG	2-GANG DOUBLE-DEPTH BOX W/ 1-GANG REDUCER	DOUBLE-DEPTH 1-GANG BELL WEATHERPROOF BOX	HOME RUN TO AV RACK
FM --	GYM / CLASSROOM	FM TRANSMITTER	1-GANG	1-GANG	2-GANG DOUBLE-DEPTH BOX W/ 1-GANG REDUCER	DOUBLE-DEPTH 1-GANG BELL WEATHERPROOF BOX	HOME RUN TO AV RACK
LS-1 --	GYM	LOUDSPEAKER CONNECTION	1-GANG	1-GANG	2-GANG DOUBLE-DEPTH BOX W/ 1-GANG REDUCER	DOUBLE-DEPTH 1-GANG BELL WEATHERPROOF BOX	HOME RUN TO AV RACK
LS-2 --	GYM	LOUDSPEAKER CONNECTION	1-GANG	1-GANG	2-GANG DOUBLE-DEPTH BOX W/ 1-GANG REDUCER	DOUBLE-DEPTH 1-GANG BELL WEATHERPROOF BOX	HOME RUN TO AV RACK
CSP-1 --	GYM	REMOTE CONTROL PANEL	PRE-MADE DEVICE	PRE-MADE DEVICE	MFR: FSR INC MODEL OWB-X3-FM-PLT	MFR: FSR INC MODEL OWB-X3-SM-PLT	HOME RUN TO AV RACK
CSP-2 --	CLASSROOM	REMOTE CONTROL PANEL	1-GANG	1-GANG	2-GANG DOUBLE-DEPTH BOX W/ 1-GANG REDUCER	DOUBLE-DEPTH 1-GANG BELL WEATHERPROOF BOX	HOME RUN TO AV RACK
VPJ --	GYM	(FUTURE) VIDEO PROJECTOR	BLANK	BLANK	NEMA TYPE 1 6X6X6	NEMA TYPE 1 6X6X6	HOME RUN TO AV RACK
SCRC --	GYM	(FUTURE) MOTORIZED SCREEN CONTROL	BLANK	BLANK	2-GANG DOUBLE-DEPTH BOX	DOUBLE-DEPTH 2-GANG BELL WEATHERPROOF BOX	HOME RUN TO AV RACK
SC --	CLASSROOM	CEILING MOUNT 70V LOUDSPEAKER	N/A DIRECT CONNECT	N/A DIRECT CONNECT	1-GANG W/ FLEX CONDUIT TO LOUDSPEAKER	1-GANG W/ FLEX CONDUIT TO LOUDSPEAKER	FROM AV RACK - CONTINUES TO OTHER SIMILAR DEVICES IN AREA

1 AV PANEL SCHEDULE
NTS

PRODUCTION SYSTEMS SCOPE MATRIX		
SCOPE	RESPONSIBILITY	
	EC	AV
POWER SYSTEMS (COMPLETE)	X	
COMPANY SWITCHES	X	
CONDUIT FOR AV SYSTEM	X	
WIRE & PULL FOR AV SYSTEMS (LOW-VOLT ONLY)		X
WIRE TERMINATION FOR AV SYSTEMS		X
EQUIPMENT RACKS FOR AV		X
AV EQUIPMENT & INSTALLATION		X
AV TESTING, TUNING, CONFIGURATION		X

2 AV PRODUCTION SYSTEMS SCOPE MATRIX
NTS

ASSISTIVE LISTENING			
	# SEATS	# RECEIVERS / #HEARING AID	TYPE
GYM	868	35/9	FM
CLASSROOM	79	4/2	FM

219.3 Receivers for Assistive Listening Systems -Department of Justice's ADA Standards for Accessible Design (2010)-		
Capacity of Seating in Assembly Area	Minimum Number of Required Receivers	Minimum Number of Required Receivers Required to be Hearing-aid Compatible
50 or less	2	2
51 to 200	2, plus 1 per 25 seats over 50 seats [1]	2
201 to 500	2, plus 1 per 25 seats over 50 seats [1]	1 per 4 receivers [1]
501 to 1000	20, plus 1 per 33 seats over 500 seats [1]	1 per 4 receivers [1]
1001 to 2000	35, plus 1 per 50 seats over 1000 seats [1]	1 per 4 receivers [1]
2001 and over	55 plus 1 per 100 seats over 2000 seats [1]	1 per 4 receivers [1]
1. Or fraction thereof.		

ASSISTIVE LISTENING CODE REFERENCES

1. 219.2 Required Systems. In each assembly area where audible communication is integral to the use of the space, an assistive listening system shall be provided. EXCEPTION: Other than in courtrooms, assistive listening systems shall not be required where audio amplification is not provided.
2. 219.3 Receivers. Receivers complying with 706.2 shall be provided for assistive listening systems in each assembly area in accordance with Table 219.3. Twenty-five percent minimum of receivers provided, but no fewer than two, shall be hearing-aid compatible in accordance with 706.3. EXCEPTIONS: 1. Where a building contains more than one assembly area and the assembly areas required to provide assistive listening systems are under one management, the total number of required receivers shall be permitted to be calculated according to the total number of seats in the assembly areas in the building provided that all receivers are usable with all systems. 2. Where all seats in an assembly area are served by an induction loop assistive listening system, the minimum number of receivers required by Table 219.3 to be hearing-aid compatible shall not be required to be provided.
3. Advisory 706.1 General. Assistive listening systems are generally categorized by their mode of transmission. There are hard-wired systems and three types of wireless systems: induction loop, infrared, and FM radio transmission. Each has different advantages and disadvantages that can help determine which system is best for a given application. For example, an FM system may be better than an infrared system in some open-air assemblies since infrared signals are less effective in sunlight. On the other hand, an infrared system is typically a better choice than an FM system where confidential transmission is important because it will be contained within a given space.
4. 703.7.2.4 Assistive Listening Systems. Assistive listening systems shall be identified by the International Symbol of Access for Hearing Loss complying with Figure 703.7.2.4. (signage by architect).

3 ASSISTIVE LISTENING CALCULATIONS & REFERENCES
NTS

QUATTROCCHI KWOK ARCHITECTS

Main:
636 Fifth Street, Santa Rosa, CA 95404
East Bay:
55 Harrison Street, Suite 525,
Oakland, CA 94607
(707) 576-0829

The Shalleck Collaborative Inc.
Planning and Design of Theatres | Production Systems | AV
1533 Martin Luther King Jr Way
Berkeley, CA 94709
tel 415-956-4100
www.shalleck.com

FREEDOM HIGH SCHOOL

NEW AUXILIARY GYMNASIUM

1050 NEROLY RD,
OAKLEY, CA 94561

LIBERTY UNION HIGH SCHOOL DISTRICT

REVISIONS

DSA APP NO. 01-119278

ARCH PROJECT NO: 1869.00

DRAWN BY:

DRAWING SCALE:

PTN: 61721-78 FILE NO: 7-H4

BID DOCUMENT

APRIL 27, 2021

SHEET TITLE

AV PANEL SCHEDULE & ALS INFORMATION

SHEET NUMBER

AV-M0.1

WIRETYPE SCHEDULE

NOTES:
1- WIRETYPES SHOWN BELOW ARE CURRENT TO OUR BEST KNOWLEDGE.
2- MANUFACTURER SUBSTITUTIONS ARE ALLOWED, WITH APPROVAL FROM CONSULTANT.
3- ALL CONDUIT, BACKBOXES AND JUNCTION BOXES BY ELECTRICAL CONTRACTOR.

TYPE	DESCRIPTION	DRY LOCATIONS EX: IN-WALL, CEILING, & CMD					WET LOCATIONS EX: IN-SLAB, IN-GRADE, OUTDOOR					NOTES
		MFR	MODEL	O.D.	AREA	RATING	MFR	MODEL	O.D.	AREA	RATING	
GROUP A - MIC LEVEL												
A1	Microphone Level Audio 22 AWG, 7X30 stranding, Foil shield	Belden	9451	0.135	0.0143	CMR	Belden	2451RW	0.158	0.0196	CMR	
GROUP B - LINE LEVEL												
B1	Line Level Audio 22 AWG, 7x30 Stranding, Foil Shield	Belden	9451	0.135	0.0143	CMR	Belden	2451RW	0.158	0.0196	CMR	
B2	Digital Audio - AES/EBU, 110-ohm 22 AWG, 7x30 Stranding, Foil Shield	Gepco	DS401	0.180	0.0254	CMR	Sommer Cable	200-0241AQ	0.276	0.0598	CMR	
B3	Line Audio + DC Power 1-PR 22 AWG, 7x30 Stranding, Foil Shield 1-PR 18 AWG, 16x30 Stranding, Foil Shield	Belden	1502R	0.250	0.0491	CMR	Liberty	LLINX-U-DB	0.275	0.0549	DB	Runs Under 300'
B3B	Line Audio + DC Power 1-PR 22 AWG, 7x30 Stranding, Foil Shield 1-PR 14 AWG, 16x30 Stranding, Foil Shield	Sommer Cable	500-0101-1	0.291	0.0665	CMR	Belden	(1) 2451RW & (1) 5000U1	0.158 & 0.320	0.0196 & 0.0804	N/A	Runs Over 300'
GROUP C - VIDEO, NETWORK, & RF LEVEL												
C1	Party-Line Intercom, 1 CH 20 AWG, 7x28 Stranding, Foil Shield	Belden	8762	0.204	0.0327	CM	West Penn	AQC292	0.220	0.0380	CL3	Runs Under 500'
C1B	Party-Line Intercom, 1 CH 18 AWG, 16x30 Stranding, Foil Shield	Belden	8760	0.222	0.0387	CM	West Penn	AQ293	0.310	0.0754	CL3	Runs Over 500'
C1C	Digital Intercom, 1 CH 20 AWG, 7x28 Stranding, Foil Shield	Belden	9207	0.330	0.0855	CMG	West Penn	AQC292	0.220	0.0380	CL3	Helix-Net 1 Channel
C2	Party-Line Intercom, 2 CH 22 AWG, 7x30 Stranding, Foil Sheild, 2 Pair	Belden	1814R	0.330	0.0855	CMR	West Penn	AQC430	0.250	0.0491	CL3	
C3	Party-Line Intercom, 4 CH 22 AWG, 7x30 Stranding, Foil Shield, 4 Pair	Belden	1815R	0.384	0.1158	CMR	West Penn	AQC439	0.427	0.1431	CL3	
C3B	Digital Intercom, Multi-CH 24 AWG, Solid, Foil Shield, 4 Pair, Cat5e, F/UTP	Belden	1533R	0.260	0.0531	CMR	Belden	7937A	0.276	0.0598	DB	Helix-Net Multi Channel
C5	Ethernet Data, Cat 6A, Single Foil Shield, F/UTP 23 AWG, Solid, Bonded Pairs	Belden	10GX62F	0.300	0.0707	CMR	Belden	2141A	.370	0.1075	CM-LS	
C6	Crestron / AMX Control 22 AWG, 7x30 Stranded, Foil Shield, (DATA) 18 AWG, 16x30 Stranded, (Power)	Liberty	LLINX-U	0.246	0.0475	CMG	Liberty	LLINX-U-DB	0.275	0.0549	DB	
C7	DC Control, 2 Conductor 18 AWG, 16x30 Stranded, Twisted Pair	Belden	9740	0.210	0.0346	CMG	West Penn	AQ224	0.270	0.0572	CL3	
C8	DC Control, 4 Conductor 18 AWG, 16x30 Stranded, Twisted Pair	Belden	9156	0.333	0.0870	CMG	West Penn	AQ244	0.327	0.0839	CL3	
C9	CATV Video 18 AWG, Solid Condutor, Braided Sheild, RG-6 Type	Belden	9116	0.270	0.0572	CM, CATV	West Penn	AQC841	0.275	0.0594	CL3	
C10	Production Video 20 AWG, Solid Conductor, Braided Shield, RG-59 Type	Belden	1505A	0.233	0.0426	CMR	Belden	88281	0.271	0.0577	CMP	Runs Under 500'
C10B	Production Video 18 AWG, Solid Conductor, Braided Shield	Belden	1694A	0.274	0.0589	CMR	Belden	1694WB	0.274	0.0589	CMR	Runs Over 500'
C10C	Production Video 16 AWG, Solid Conductor, Braided Shied	Belden	4794R	0.320	0.0804	CMR	NO KNOWN OPTION					
C12	Wireless Antenna 10 AWG, Solid Condutor, Braided Shield, RG-8/U, 50Ω	Time Microwave systems	LMR-400-FR	0.405	0.1288	CMR	Time Microwave Systems	LMR-400-DB	0.405	0.1288	DB	
C14	Infared Emitter 19 AWG, Solid Conductor, Braided Shield	Time Microwave systems	LMR-200-FR	0.195	0.0298	CMR	Time Microwave Systems	LMR-200-DB	0.195	0.0298	DB	Runs Under 100'
C15	Extron XTP/DTP shielded 4-Twisted Pair	Extron	XTP DTP 24	0.276	0.0598	CM	NO KNOWN OPTION					
C19	Digital Media Cable, 8G Shielded 4 Twisted	Crestron	DM-CBL-8G-NP	0.244	0.0467	CMR	NO KNOWN OPTION					Use DM-8G-CONN Connector
GROUP D - LOUDSPEAKER LEVEL												
D1	Loudspeaker, 2 Conductor 12 AWG, 65X30 Stranded	Belden	5000UP	.312	0.0764	CL3	Belden	5000U1	0.320	0.0804	WB	
D2	Loudspeaker, 4 Conductor 12 AWG, 65X30 Stranded	Belden	5002UP	0.365	0.1046	CL3	Belden	5002U1	0.377	0.1116	WB	
D3	Loudspeaker, 70 Volt, 2 Conductor 18 AWG, 7x26 Stranded	West Penn	224	0.156	0.0191	CMR	West Penn	AQ224	0.270	0.0572	CL3	
D4	Loudspeaker, 70 Volt, 4 Conductor 18 AWG, 7x26 Stranded	West Penn	244	0.183	0.0263	CMR	West Penn	AQ244	0.327	0.0839	CL3	
GROUP E - EMPTY CONDUIT												
E	NO WIRETYPE, FOR FUTURE EXPANSION											
GROUP F - FIBER OPTIC LEVEL												
F3	Single-Mode Fiber, 2-strand 1310 µm, OS2, OFNR	Belden	FISD002R9	0.184	0.0266	OFNR	Belden	FSSL002NF	0.184	0.0266	OFNR	
F5	Multi-Mode Fiber, 2-strand, OM3 50/125 MM, DUPLEX, OFNR	Belden	FI4D002R9	0.184	0.0266	OFNR	Belden	FS2H002NF	0.184	0.0266	OFNR	

1 AV WIRETYPE SCHEDULE
NTS

CONDUIT SEPARATION TABLE
-AV CONDUITS-

	A	B	C	D	E
A	--	12"	12"	12"	12"
B	12"	--	6"	6"	6"
C	12"	6"	--	6"	6"
D	12"	6"	6"	--	6"
E	12"	6"	6"	6"	--

CONDUIT SEPARATION TABLE
-ELECTRICAL-

	AV CONDUIT
AC BRANCH LOAD	36"
AC- FEEDER	48"
AC-DIMMED LOAD	36"
TEL/DATA	12"
CONTROL (OTHER)	12"

CONDUIT SEPARATION NOTES

1. THE AV SPECIFIC CONDUIT SEPARATION TABLE ABOVE REFLECTS BEST-CASE SCENARIOS, AND SHOULD BE ADHERED TO WHEN POSSIBLE.
2. ABSOLUTE MINIMUM SEPARATION FOR AV CONDUIT IS 4", IF ABOVE DISTANCES ARE NOT ACHIEVABLE.
3. ABSOLUTE MINIMUM SEPARATION BETWEEN AV AND ELECTRICAL POWER CONDUITS IS 36"

EXCEPTIONS

1. SHOULD ELECTRICAL CONDUIT NEED TO CROSS AV CONDUIT, DO SO AT 90-DEGREES.
2. IF AV CONDUIT MINIMUM SEPARATION CANNOT BE MET (SUCH AS WHEN GOING THROUGH A NARROW CAVITY), CONDUIT MAY RUN IMMEDIATELY ADJACENT FOR NO MORE THAN 3'-0" IN ANY 50'-0" SPAN.

2 CONDUIT SEPARATION TABLES
NTS

CONDUIT RUN LENGTH LIMITS
-ELECTRICAL-

AV CONDUIT TYPE	MAX RUN LENGTH
A	500'
B	500'
C	250'
D	500'
E	250'
F	5000'

CONDUIT RUN LENGTH LIMIT NOTES

1. C-TYPE CONDUIT CONTAINS IP BASED NETWORK CONNECTIONS THAT CAN NOT EXCEED 250'
2. IF CONDUIT RUN LENGTHS CAN NOT BE MAINTAINED, CONTRACTOR MUST SUBMIT RUN LENGTH FOR APPROVAL.

3 CONDUIT RUN LENGTH LIMITS
NTS

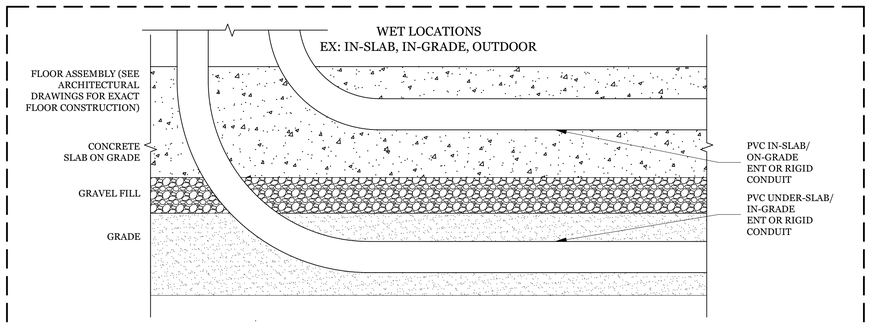

NOTES:
1. IN-SLAB/ON-GRADE AND UNDER-SLAB/IN-GRADE CONDITIONS: AT THE CONTRACTOR'S OPTION, NON-METALLIC CONDUIT (ENT) AND/OR RIGID METAL CONDUIT (RMC) MAY BE USED, SO LONG AS THE FOLLOWING CONDITIONS ARE MET:
   A. CONTRACTOR MUST USE THE "WET LOCATION" CABLE AS IDENTIFIED IN THE AV CABLE SCHEDULE.
   B. "WET LOCATION" CABLE IS LARGER IN DIAMETER, SO THE CONTRACTOR MUST RE-CALCULATE THE CONDUIT SIZES TO MAINTAIN COMPLIANCE WITH NEC FILL RATIOS. SUBMIT CALCULATIONS FOR REVIEW.
   C. "WET LOCATION" CABLE IS MORE EXPENSIVE. THE PROJECT WILL NOT ACCEPT A COST INCREASE DUE TO LACK OF COMMUNICATION BETWEEN ELECTRICAL CONTRACTOR AND AV CONTRACTOR.
   D. CONTRACTOR MUST MAINTAIN STATED SEPARATION AND GROUPING REQUIREMENTS.

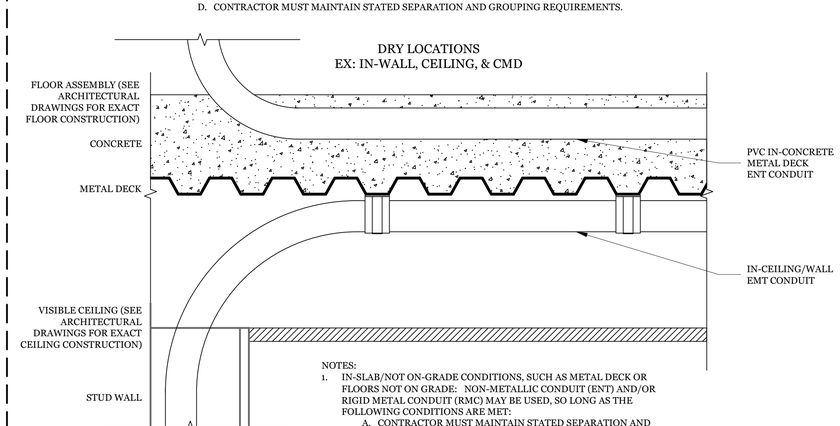

NOTES:
1. IN-SLAB/NOT ON-GRADE CONDITIONS, SUCH AS METAL DECK OR FLOORS NOT ON GRADE: NON-METALLIC CONDUIT (ENT) AND/OR RIGID METAL CONDUIT (RMC) MAY BE USED, SO LONG AS THE FOLLOWING CONDITIONS ARE MET:
   A. CONTRACTOR MUST MAINTAIN STATED SEPARATION AND GROUPING REQUIREMENTS.

4 WET/DRY CABLE SELECTION GUIDELINES
NTS

QUATTROCCHI KWOK ARCHITECTS

Main:
636 Fifth Street, Santa Rosa, CA 95404
East Bay:
55 Harrison Street, Suite 525,
Oakland, CA 94607
(707) 576-0829

The Shalleck Collaborative Inc.
Planning and Design of Theatres | Production Systems | AV
1533 Martin Luther King Jr Way
Berkeley, CA 94709
tel 415-956-4100
www.shalleck.com

FREEDOM HIGH SCHOOL

NEW AUXILIARY GYMNASIUM

1050 NEROLY RD,
OAKLEY, CA 94561

LIBERTY UNION HIGH SCHOOL DISTRICT

REVISIONS

DSA APP NO. 01-119278
ARCH PROJECT NO: 1869.00
DRAWN BY:
DRAWING SCALE:
PTN: 61721-78 FILE NO: 7-H4
BID DOCUMENT
APRIL 27, 2021

SHEET TITLE
AV WIRETYPE SCHEDULE

SHEET NUMBER
AV-M0.2

GENERAL NOTE:
1) CABLE TYPE A1 MICROPHONE SHOWN AS EXAMPLE ONLY.

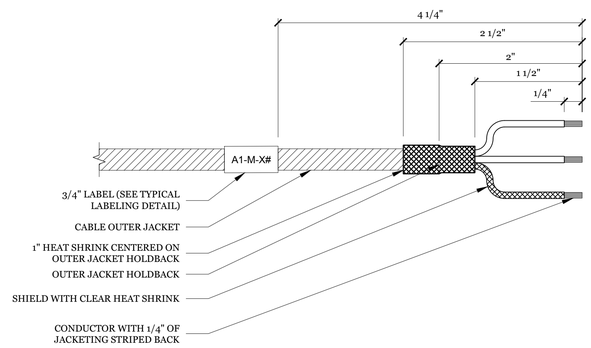

1 TYPICAL WIRE TERMINATION PREP
NTS

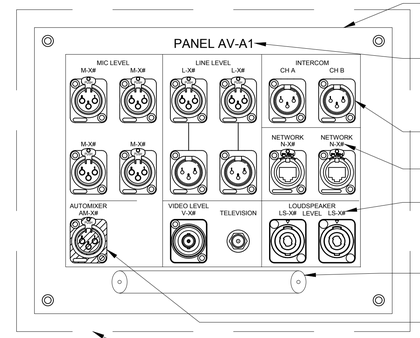

FACEPLATE SHALL MATCH COLOR WHERE PANEL HAS BEEN PLACED, FACEPLATE SHALL BE 0.080" ALUMINUM, EDGES EASED, FINISHED IN FINE TEXTURE, SCRATCH-RESISTANT POWDER COAT, WITH FASTENERS COUNTERSUNK (U.O.N).

MAIN PANEL LABEL SHALL BE LASER ETCHED, ARIAL FONT & ½" HIGH CHARACTERS. (U.O.N.).

SEE SPEC FOR EXACT CONNECTOR TYPES. ALL CONNECTORS TO MATCH PANEL COLOR WHEN POSSIBLE.

INTERCOM JACKS: PROVIDE WHIRLWIND WC3M, 3-POLE MALE XLR CONNECTOR IN RED COLOR SHELL.

LABEL (SEE TYPICAL LABELING DETAIL)

LASER ETCHED LABELS SHALL BE: ARIAL FONT & ⅛" (OR ¼") HIGH CHARACTERS. (U.O.N.).

ALUMINUM CABLE TIE-OFF BARS ON ALL PANELS 8" WIDE AND LARGER. TIE OFF BAR TO MATCH PANEL COLOR (SEE SPEC FOR EXACT MAKE AND MODEL).

AUTOMIX JACKS: PROVIDE WHIRLWIND WC3F, 3-POLE FEMALE XLR CONNECTOR IN BLUE COLOR SHELL.

NOTE: PANELS SPECIFIED AS FLUSH MOUNTED SHALL OVERLAP BACK BOX BY ½". SURFACE MOUNTED PANELS SHALL MATCH BACK BOX SIZE WITH NO GAPS OR OVERLAP. COORDINATION OF BACK BOX TYPE, SIZE & MOUNTING WITH FIELD VERIFICATION REQUIRED PRIOR TO ORDERING PANELS.

2 TYPICAL MULTI I/O PANEL
NTS

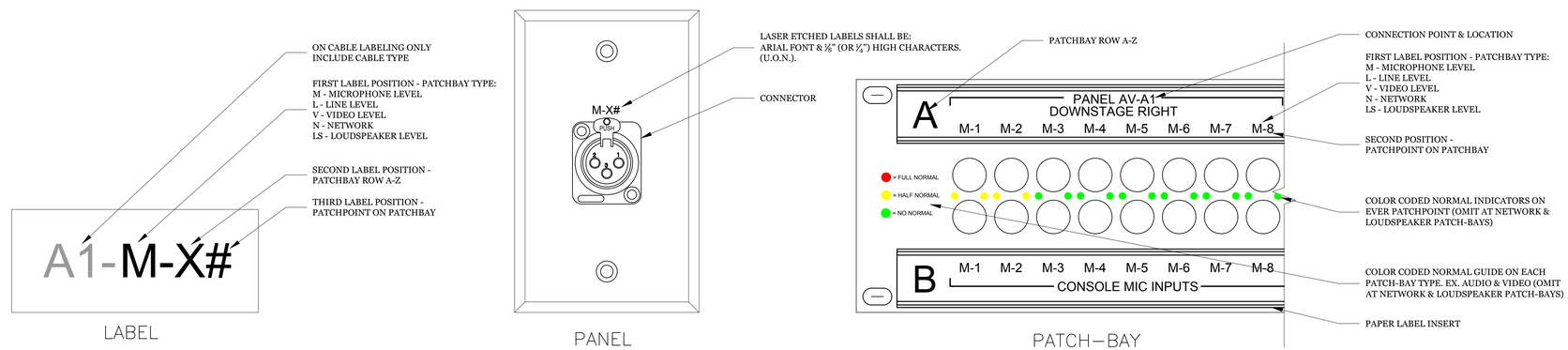

3 TYPICAL LABELING DETAIL
NTS

QUATTROCCHI KWOK ARCHITECTS

Main:
636 Fifth Street, Santa Rosa, CA 95404
East Bay:
55 Harrison Street, Suite 525,
Oakland, CA 94607
(707) 576-0829

The Shalleck Collaborative Inc.
Planning and Design of Theatres | Production Systems | AV
1533 Martin Luther King Jr Way
Berkeley, CA 94709
tel 415-956-4100
www.shalleck.com

FREEDOM HIGH SCHOOL

NEW AUXILIARY GYMNASIUM

1050 NEROLY RD,
OAKLEY, CA 94561

LIBERTY UNION HIGH SCHOOL DISTRICT

REVISIONS

DSA APP NO. 01-119278

ARCH PROJECT NO: 1869.00

DRAWN BY:

DRAWING SCALE:

PTN: 61721-78 FILE NO. 7-H4

BID DOCUMENT

APRIL 27, 2021

SHEET TITLE

AV STANDARD DETAILS

SHEET NUMBER

AV-M0.3

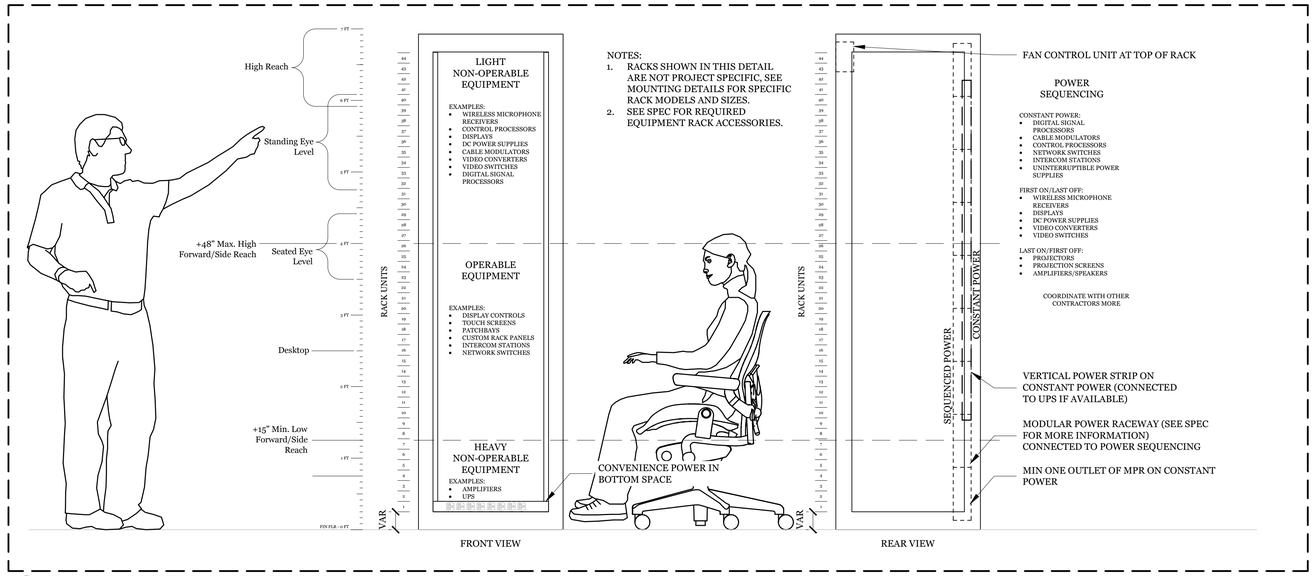

1 RACK ELEVATION GUIDELINES
NTS

QUATTROCCHI KWOK ARCHITECTS
Main:
636 Fifth Street, Santa Rosa, CA 95404
East Bay:
55 Harrison Street, Suite 525,
Oakland, CA 94607
(707) 576-0829

The Shalleck Collaborative Inc.
Planners and Design of Theatres | Production Systems | AV
1533 Martin Luther King Jr Way
Berkeley, CA 94709
tel 415-956-4100
www.shalleck.com

FREEDOM HIGH SCHOOL

NEW AUXILIARY GYMNASIUM

1050 NEROLY RD,
OAKLEY, CA 94561

LIBERTY UNION HIGH SCHOOL DISTRICT

REVISIONS

DSA APP NO. 01-119278
ARCH PROJECT NO: 1869.00
DRAWN BY:
DRAWING SCALE:
PTN: 61721-78 FILE NO: 7-H4
BID DOCUMENT
APRIL 27, 2021

SHEET TITLE
AV STANDARD DETAILS

SHEET NUMBER
AV-M.04

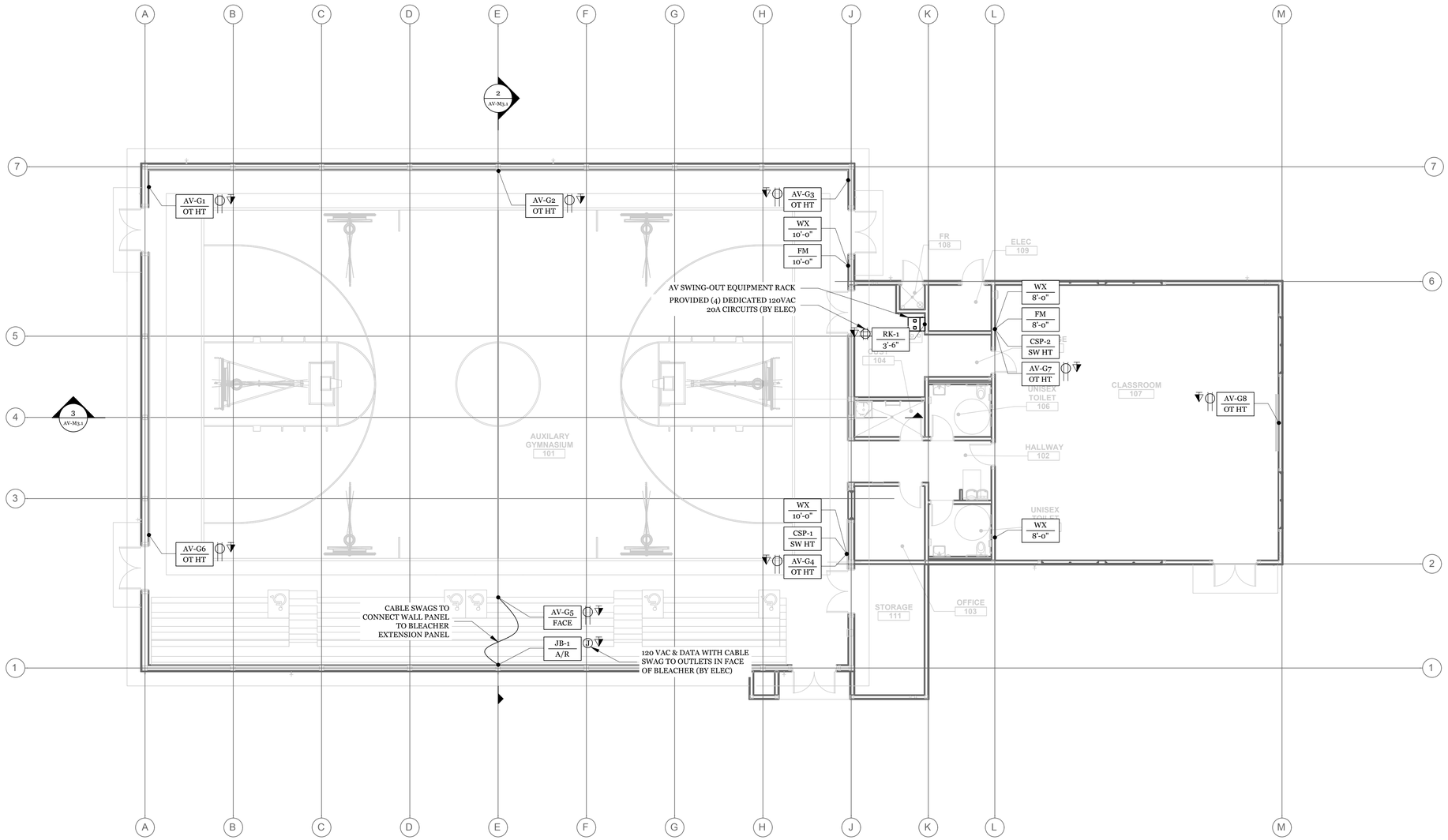

1 AV DEVICE PLAN AT LEVEL 1
1/8"=1'-0"

AV SYMBOL KEY

DEVICE LOCATION
AV PANEL TYPE

XXX
X'-X"

MOUNTING
CONDITION OR HEIGHT TO CENTER OF BACKBOX

SW HT:	PROJECT STANDARD SWITCH HEIGHT
OT HT:	PROJECT STANDARD OUTLET HEIGHT
CLNG:	CEILING MOUNT
A/R:	AS REQUIRED
BEAM:	DEVICE MOUNTED TO BEAM

AUDIO
- AV-XX: CUSTOM AV PANEL & LOCATION
- FM: FM ASSISTIVE LISTENING ANTENNA
- WX: WIRELESS MICROPHONE ANTENNA

VIDEO
- VPJ: VIDEO PROJECTOR

LOUDSPEAKER
- LS-#: LOUDSPEAKER & JACK QUANTITY / TYPE
- SC: CEILING MOUNT 70V LOUDSPEAKER

CONTROL
- SCRC: MOTORIZED ROLL-DOWN SCREEN CONTROL
- CSP-#: REMOTE CONTROL PANEL & LOCATION

OTHER
- JB-#: JUNCTION BOX
- RK-#: EQUIPMENT RACK JUNCTION BOX

LOOSE CONNECTION TO PANEL
A/V EQUIPMENT TYPE

XXX
XXX

MOUNTING
CONDITION

AUDIO
- MIC: MICROPHONE

VIDEO
- VCAM: VIDEO CAMERA
- VPJ: VIDEO PROJECTOR

LOUDSPEAKER
- *LS:* LOUDSPEAKER
- SUB: SUBWOOFER
- PS: PAGING SPEAKER

ELECTRICAL

DUPLEX OUTLET, 120V / 20A
(BY ELEC)

QUAD OUTLET, 120V / DUAL 20A
(BY ELEC)

SPECIALTY OUTLET (SEE DESCRIPTION)
(BY ELEC)

JUNCTION BOX (SEE DESCRIPTION)
(BY ELEC)

TEL/DATA OUTLET
(BY ELEC)

GENERAL NOTES

1. ALL AC OUTLETS, CONDUIT & BACKBOXES BY ELECTRICAL.
2. REQUIRED STRUCTURAL BACKING BY STRUCTURAL ENGINEER.
3. A/V CONTRACTOR TO COORDINATE WITH ELECTRICAL TO DETERMINE EXACT LOCATION OF A/V BACKBOXES.
4. ALL VISIBLE LOUDSPEAKERS & PANELS SHALL BE PROVIDED IN A COLOR AS DETERMINED BY THE ARCHITECT DURING THE SHOP DRAWING PHASE. COORDINATE EXACT MOUNTING CONDITIONS WITH ARCHITECT, STRUCTURAL ENGINEER & GENERAL CONTRACTOR.

QUATTROCCHI KWOK
ARCHITECTS

Main:
636 Fifth Street, Santa Rosa, CA 95404
East Bay:
55 Harrison Street, Suite 525,
Oakland, CA 94607
(707) 576-0829

The Shalleck Collaborative Inc.
Planning and Design of Theatres | Production Systems | AV
1533 Martin Luther King Jr Way
Berkeley, CA 94709
tel 415-956-4100
www.shalleck.com

FREEDOM HIGH SCHOOL

NEW AUXILIARY GYMNASIUM

1050 NEROLY RD,
OAKLEY, CA 94561

LIBERTY UNION
HIGH SCHOOL
DISTRICT

REVISIONS

DSA APP NO. 01-119278
ARCH PROJECT NO: 1869.00
DRAWN BY:
DRAWING SCALE:
PTN: 61721-78 FILE NO: 7-H4

BID DOCUMENT

APRIL 27, 2021

SHEET TITLE

AV DEVICE PLAN AT LEVEL 1

SHEET NUMBER

AV-M1.1

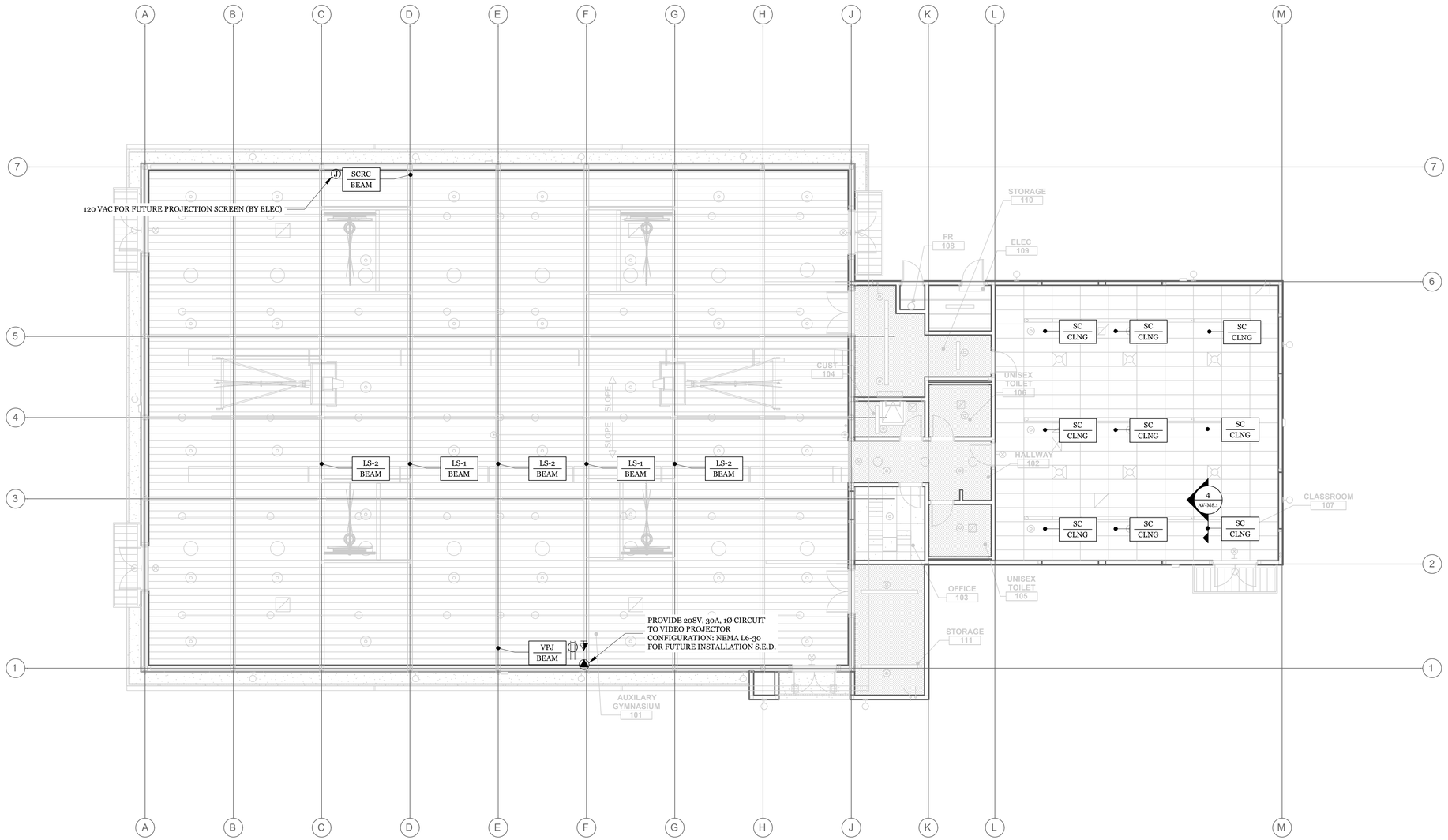

1 AV DEVICE RCP AT LEVEL 1
1/8"=1'-0"

AV SYMBOL KEY

DEVICE LOCATION
AV PANEL TYPE
XXX
X'-X"
MOUNTING CONDITION OR HEIGHT TO CENTER OF BACKBOX

SW HT: PROJECT STANDARD SWITCH HEIGHT
OT HT: PROJECT STANDARD OUTLET HEIGHT
CLNG: CEILING MOUNT
A/R: AS REQUIRED
BEAM: DEVICE MOUNTED TO BEAM

AUDIO
- AV-XX: CUSTOM AV PANEL & LOCATION
- FM: FM ASSISTIVE LISTENING ANTENNA
- WX: WIRELESS MICROPHONE ANTENNA

VIDEO
- VPJ: VIDEO PROJECTOR

LOUDSPEAKER
- LS-#: LOUDSPEAKER & JACK QUANTITY / TYPE
- SC: CEILING MOUNT 70V LOUDSPEAKER

CONTROL
- SCRC: MOTORIZED ROLL-DOWN SCREEN CONTROL
- CSP-#: REMOTE CONTROL PANEL & LOCATION

OTHER
- JB-#: JUNCTION BOX
- RK-#: EQUIPMENT RACK JUNCTION BOX

LOOSE CONNECTION TO PANEL
A/V EQUIPMENT TYPE
XXX
XXX
MOUNTING CONDITION

AUDIO
- MIC: MICROPHONE

VIDEO
- VCAM: VIDEO CAMERA
- VPJ: VIDEO PROJECTOR

LOUDSPEAKER
- *LS:* LOUDSPEAKER
- SUB: SUBWOOFER
- PS: PAGING SPEAKER

ELECTRICAL

DUPLEX OUTLET, 120V / 20A
(BY ELEC)

QUAD OUTLET, 120V / DUAL 20A
(BY ELEC)

SPECIALTY OUTLET (SEE DESCRIPTION)
(BY ELEC)

JUNCTION BOX (SEE DESCRIPTION)
(BY ELEC)

TEL/DATA OUTLET
(BY ELEC)

GENERAL NOTES

1. ALL AC OUTLETS, CONDUIT & BACKBOXES BY ELECTRICAL.
2. REQUIRED STRUCTURAL BACKING BY STRUCTURAL ENGINEER.
3. A/V CONTRACTOR TO COORDINATE WITH ELECTRICAL TO DETERMINE EXACT LOCATION OF A/V BACKBOXES.
4. ALL VISIBLE LOUDSPEAKERS & PANELS SHALL BE PROVIDED IN A COLOR AS DETERMINED BY THE ARCHITECT DURING THE SHOP DRAWING PHASE. COORDINATE EXACT MOUNTING CONDITIONS WITH ARCHITECT, STRUCTURAL ENGINEER & GENERAL CONTRACTOR.

QUATTROCCHI KWOK
ARCHITECTS

Main:
636 Fifth Street, Santa Rosa, CA 95404
East Bay:
55 Harrison Street, Suite 525,
Oakland, CA 94607
(707) 576-0829

The Shalleck Collaborative Inc.
Planning and Design of Theatres | Production Systems | AV
1533 Martin Luther King Jr Way
Berkeley, CA 94709
tel 415-956-4100
www.shalleck.com

FREEDOM HIGH SCHOOL

NEW AUXILIARY GYMNASIUM

1050 NEROLY RD,
OAKLEY, CA 94561

LIBERTY UNION
HIGH SCHOOL
DISTRICT

REVISIONS

DSA APP NO. 01-119278
ARCH PROJECT NO: 1869.00
DRAWN BY:
DRAWING SCALE:
PTN: 61721-78 FILE NO: 7-H4
BID DOCUMENT
APRIL 27, 2021

SHEET TITLE
AV DEVICE RCP AT LEVEL 1

SHEET NUMBER
AV-M2.1

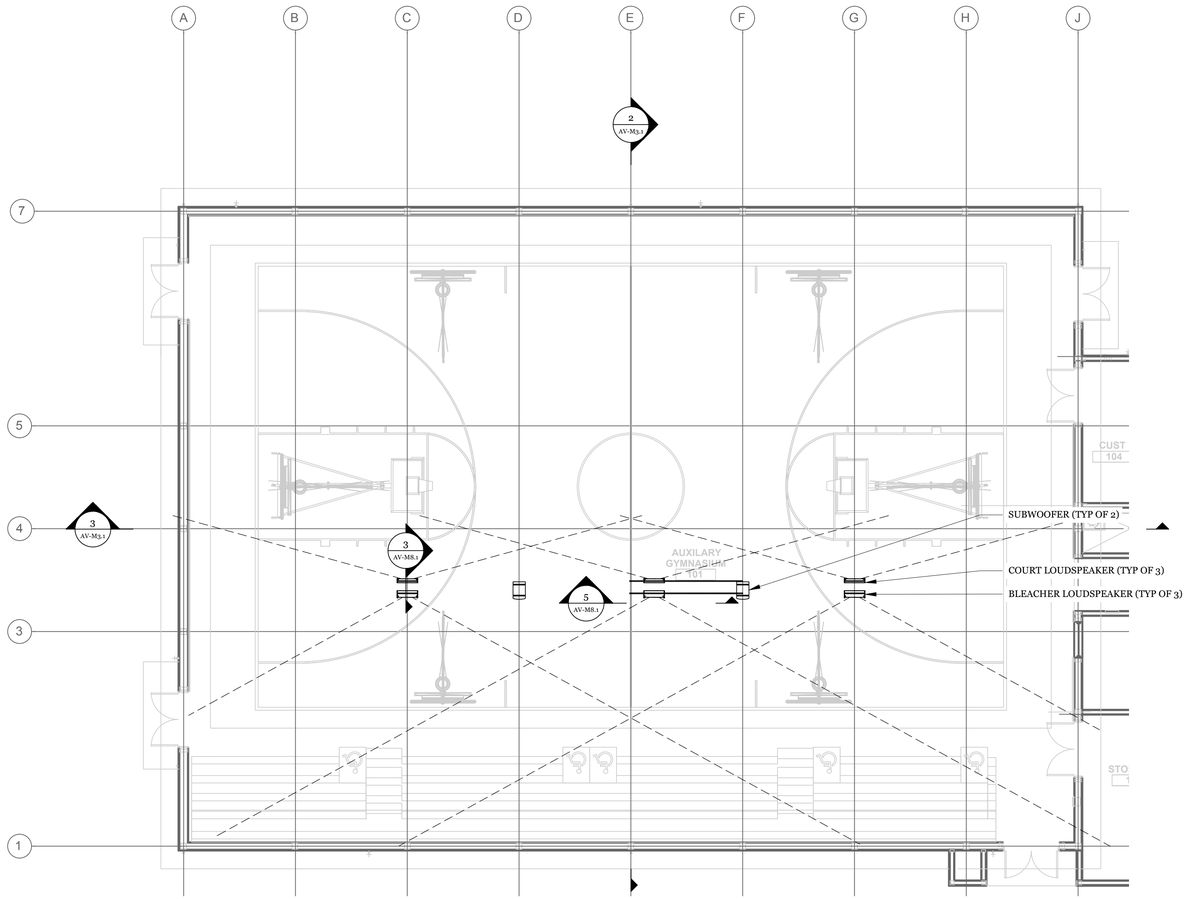

1 AUDIO PLAN AT GYM
1/8"=1'-0"

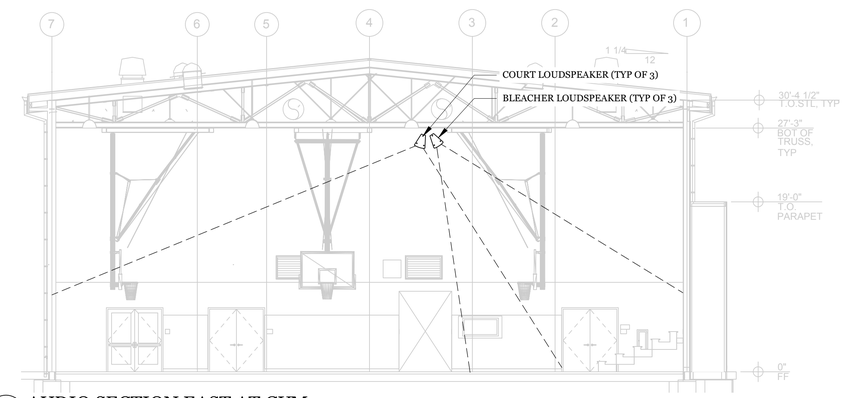

2 AUDIO SECTION EAST AT GYM
1/8"=1'-0"

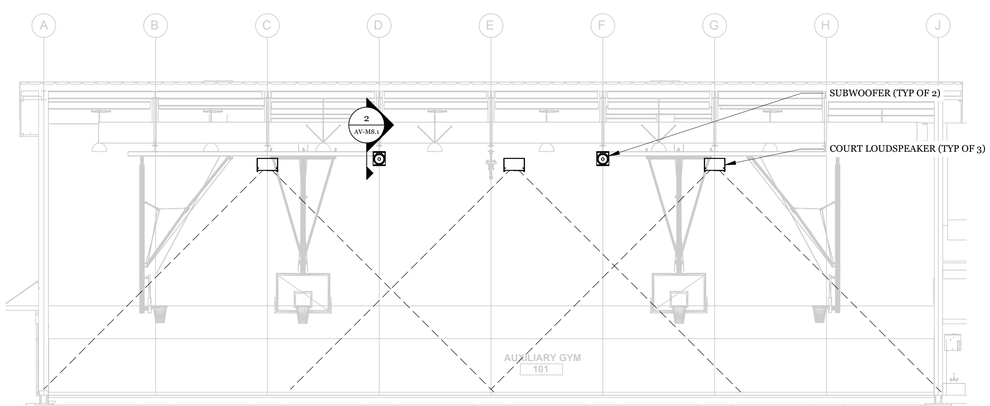

3 AUDIO SECTION NORTH AT GYM
1/8"=1'-0"

GENERAL NOTES

1. ALL AC OUTLETS, CONDUIT & BACKBOXES BY ELECTRICAL.
2. REQUIRED STRUCTURAL BACKING BY STRUCTURAL ENGINEER.
3. A/V CONTRACTOR TO COORDINATE WITH ELECTRICAL TO DETERMINE EXACT LOCATION OF A/V BACKBOXES.
4. ALL VISIBLE LOUDSPEAKERS & PANELS SHALL BE PROVIDED IN A COLOR AS DETERMINED BY THE ARCHITECT DURING THE SHOP DRAWING PHASE. COORDINATE EXACT MOUNTING CONDITIONS WITH ARCHITECT, STRUCTURAL ENGINEER & GENERAL CONTRACTOR.

QUATTROCCHI KWOK
ARCHITECTS

Main:
636 Fifth Street, Santa Rosa, CA 95404
East Bay:
55 Harrison Street, Suite 525,
Oakland, CA 94607
(707) 576-0829

The Shalleck Collaborative Inc.
Planning and Design of Theatres | Production Systems | AV
1533 Martin Luther King Jr Way
Berkeley, CA 94709
tel 415-956-4100
www.shalleck.com

FREEDOM HIGH SCHOOL

NEW AUXILIARY GYMNASIUM

1050 NEROLY RD,
OAKLEY, CA 94561

LIBERTY UNION
HIGH SCHOOL
DISTRICT

REVISIONS

DSA APP NO. 01-119278
ARCH PROJECT NO: 1869.00
DRAWN BY:
DRAWING SCALE:
PTN: 61721-78 FILE NO: 7-H4
BID DOCUMENT
APRIL 27, 2021

SHEET TITLE
AUDIO PLANS & SECTIONS AT THEATRE

SHEET NUMBER
AV-M3.1

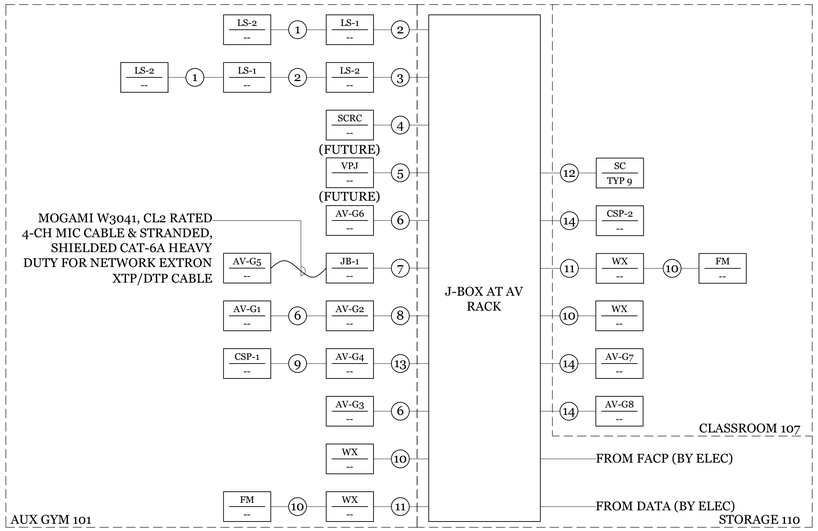

1 AV WIRE AND CONDUIT RISER DIAGRAM
NTS

WIRE & CONDUIT TABLE					
RUN NUMBER	WIRE QTY	WIRE TYPE	CONDUIT QTY	CONDUIT SIZE	NOTES
1	2	D2	1	1-0"	
2	3	D2	1	1-1/4"	
3	5	D2	1	1-1/2"	
4	--	C-TYPE	1	1-0"	FUTURE
5	--	C-TYPE	1	1-1/2'	FUTURE
6	1 3 1	A1 B1 C5	1 1 1	3/4" 3/4" 3/4"	
7	1 3 1	A1 B1 C5	1 1 1	3/4" 3/4" 1-0"	
8	2 6 2	A1 B1 C5	1 1 1	3/4" 3/4" 1-1/4"	
9	2	C5	1	3/4"	
10	1	C12	1	1-0"	
11	2	C12	1	1-1/4"	
12	1	D3	1	3/4"	
13	1 3 3	A1 B1 C5	1 1 1	3/4" 3/4" 1-1/4"	
14	1	C5	1	1-0"	

AV WIRE RISER NOTES & KEY

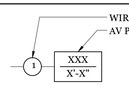

1. WIRES OF SIMILAR WIRETYPE CLASSIFICATION (A, B, C, D or E) MAY BE COMBINED INTO A SINGLE CONDUIT.
2. MINIMUM CONDUIT SIZE IS 3/4".
3. CONDUIT SIZE TO BE VERIFIED IN WRITING BY AV CONTRACTOR WITHIN 30 DAYS OF CONTRACT AWARD.
4. ALL CONDUIT & BACKBOXES BY ELECTRICAL.
5. FOLLOW CONDUIT SEPARATION TABLES & CONDUIT RUN LENGTH TABLES AS INDICATED ON KEY SHEET & IN SPECIFICATIONS.
6. INCREASE CONDUIT TO NEXT SIZE UP FOR RUNS GREATER THAN 50'-0" WITHOUT A JUNCTION BOX.

QUATTROCCHI KWOK ARCHITECTS

Main:
636 Fifth Street, Santa Rosa, CA 95404
East Bay:
55 Harrison Street, Suite 525,
Oakland, CA 94607
(707) 576-0829

The Shalleck Collaborative Inc.
Planning and Design of Theatres | Production Systems | AV
1533 Martin Luther King Jr Way
Berkeley, CA 94709
tel 415-956-4100
www.shalleck.com

FREEDOM HIGH SCHOOL

NEW AUXILIARY GYMNASIUM

1050 NEROLY RD,
OAKLEY, CA 94561

LIBERTY UNION HIGH SCHOOL DISTRICT

REVISIONS

DSA APP NO. 01-119278

ARCH PROJECT NO: 1869.00

DRAWN BY:

DRAWING SCALE:

PTN: 61721-78 FILE NO: 7-H4

BID DOCUMENT

APRIL 27, 2021

SHEET TITLE

WIRE & CONDUIT RISER DIAGRAMS

SHEET NUMBER

AV-M5.1

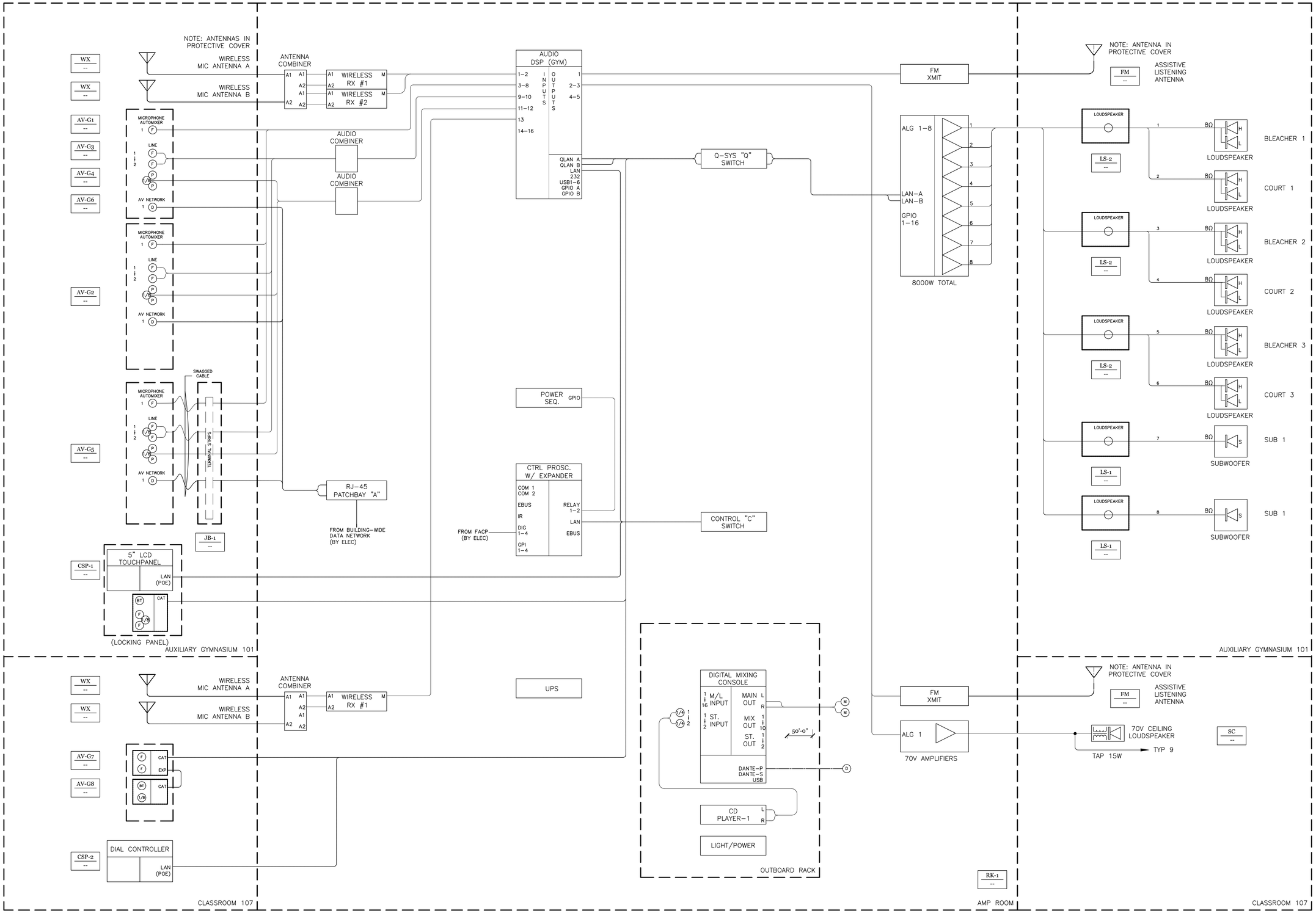

1 AV BLOCK DIAGRAM
NTS

QUATTROCCHI KWOK ARCHITECTS

Main:
636 Fifth Street, Santa Rosa, CA 95404
East Bay:
55 Harrison Street, Suite 525,
Oakland, CA 94607
(707) 576-0829

The Shalleck Collaborative Inc.
Planning and Design of Theatres | Production Systems | AV
1533 Martin Luther King Jr Way
Berkeley, CA 94709
tel 415-956-4100
www.shalleck.com

FREEDOM HIGH SCHOOL

NEW AUXILIARY GYMNASIUM

1050 NEROLY RD,
OAKLEY, CA 94561

LIBERTY UNION HIGH SCHOOL DISTRICT

REVISIONS

DSA APP NO. 01-119278

ARCH PROJECT NO: 1869.00

DRAWN BY:

DRAWING SCALE:

PTN: 61721-78 FILE NO: 7-H4

BID DOCUMENT

APRIL 27, 2021

SHEET TITLE

AV BLOCK DIAGRAMS

SHEET NUMBER

AV-M6.1

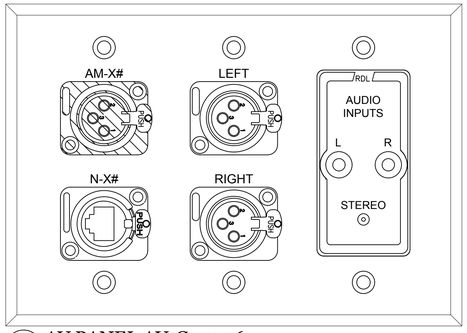

1 AV PANEL AV-G1,3,4,6
12"=1'-0"
THIS DEVICE WEIGHS LESS THAN 20 LBS.

PROVIDE BLANK DECORA CUTOUTS FOR FUTURE VIDEO

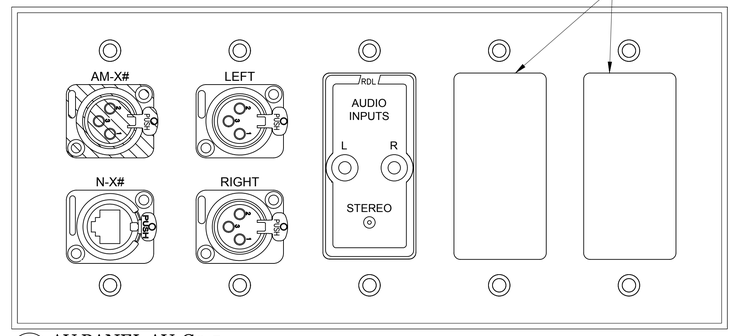

2 AV PANEL AV-G2,5
12"=1'-0"
THIS DEVICE WEIGHS LESS THAN 20 LBS.

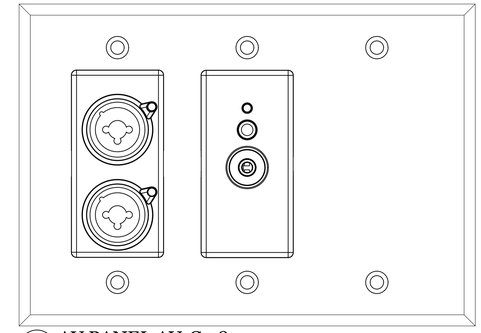

3 AV PANEL AV-G7,8
12"=1'-0"
THIS DEVICE WEIGHS LESS THAN 20 LBS.

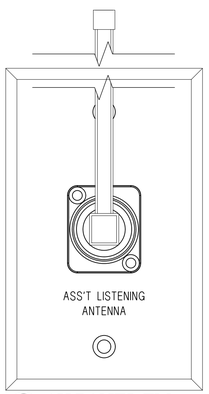

4 AV PANEL FM
12"=1'-0"
THIS DEVICE WEIGHS LESS THAN 20 LBS.

5 AV PANEL WX
12"=1'-0"
THIS DEVICE WEIGHS LESS THAN 20 LBS.

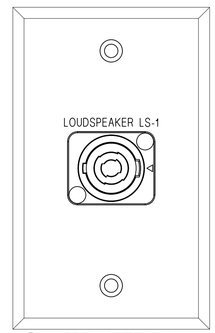

6 AV PANEL LS-1
12"=1'-0"
THIS DEVICE WEIGHS LESS THAN 20 LBS.

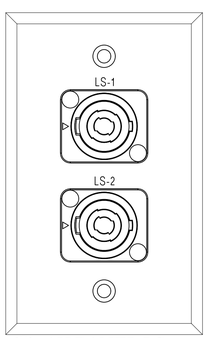

7 AV PANEL LS-2
12"=1'-0"
THIS DEVICE WEIGHS LESS THAN 20 LBS.

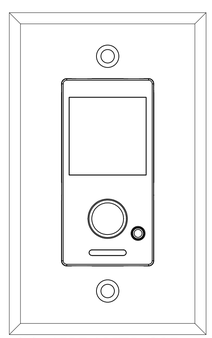

8 AV PANEL CSP-2
12"=1'-0"
THIS DEVICE WEIGHS LESS THAN 20 LBS.

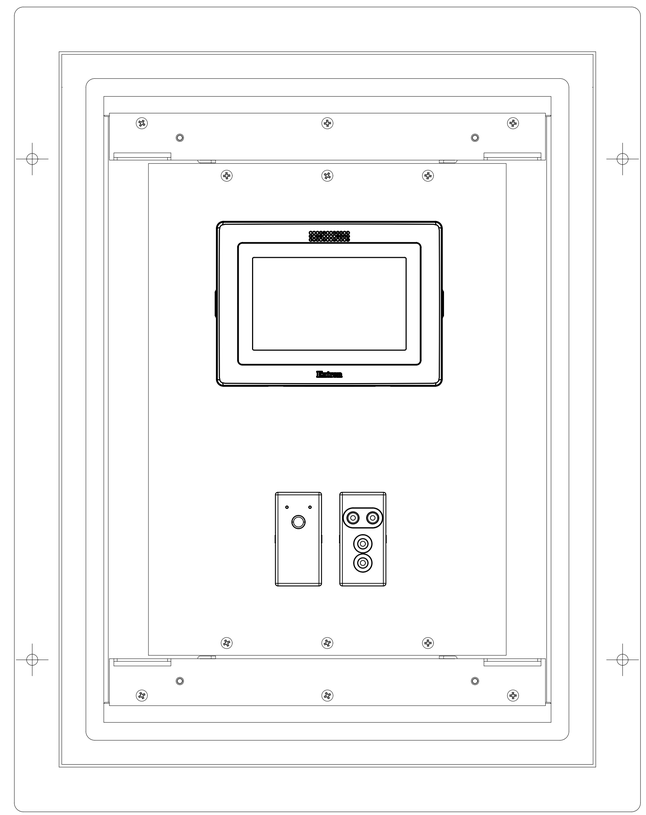

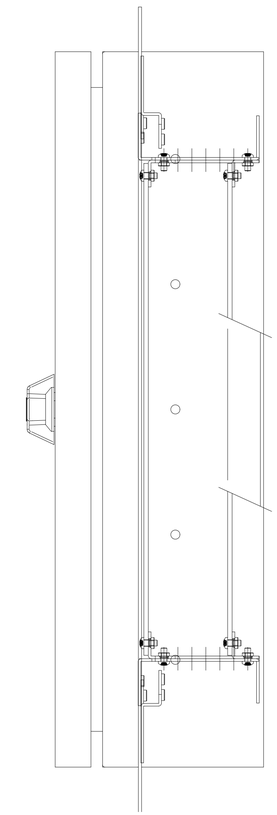

9 AV PANEL CSP-1
12"=1'-0"
THIS DEVICE WEIGHS LESS THAN 20 LBS.

GENERAL NOTES

1. ALL AC OUTLETS, CONDUIT & BACKBOXES BY ELECTRICAL.
2. REQUIRED STRUCTURAL BACKING BY STRUCTURAL ENGINEER.
3. A/V CONTRACTOR TO COORDINATE WITH ELECTRICAL TO DETERMINE EXACT LOCATION OF A/V BACKBOXES.
4. ALL VISIBLE LOUDSPEAKERS & PANELS SHALL BE PROVIDED IN A COLOR AS DETERMINED BY THE ARCHITECT DURING THE SHOP DRAWING PHASE. COORDINATE EXACT MOUNTING CONDITIONS WITH ARCHITECT, STRUCTURAL ENGINEER & GENERAL CONTRACTOR.

QUATTROCCHI KWOK ARCHITECTS

Main:
636 Fifth Street, Santa Rosa, CA 95404
East Bay:
55 Harrison Street, Suite 525,
Oakland, CA 94607
(707) 576-0829

The Shalleck Collaborative Inc.
Planning and Design of Theatres | Production Systems | AV
1533 Martin Luther King Jr Way
Berkeley, CA 94709
tel 415-956-4100
www.shalleck.com

FREEDOM HIGH SCHOOL

NEW AUXILIARY GYMNASIUM

1050 NEROLY RD,
OAKLEY, CA 94561

LIBERTY UNION HIGH SCHOOL DISTRICT

REVISIONS

DSA APP NO. 01-119278

ARCH PROJECT NO: 1869.00
DRAWN BY:
DRAWING SCALE:
PTN: 61721-78 FILE NO: 7-H4

BID DOCUMENT

APRIL 27, 2021

SHEET TITLE

AV PANEL ELEVATIONS

SHEET NUMBER

AV-M7.1

SWING-OUT AV RACK					
LOCATION	MODEL	A OVERALL HEIGHT	B OVERALL WIDTH	C OVERALL DEPTH	D MOUNTING LOCATION
STORAGE	SR-46-28	101.25"	23.56"	28.34"	90.56"

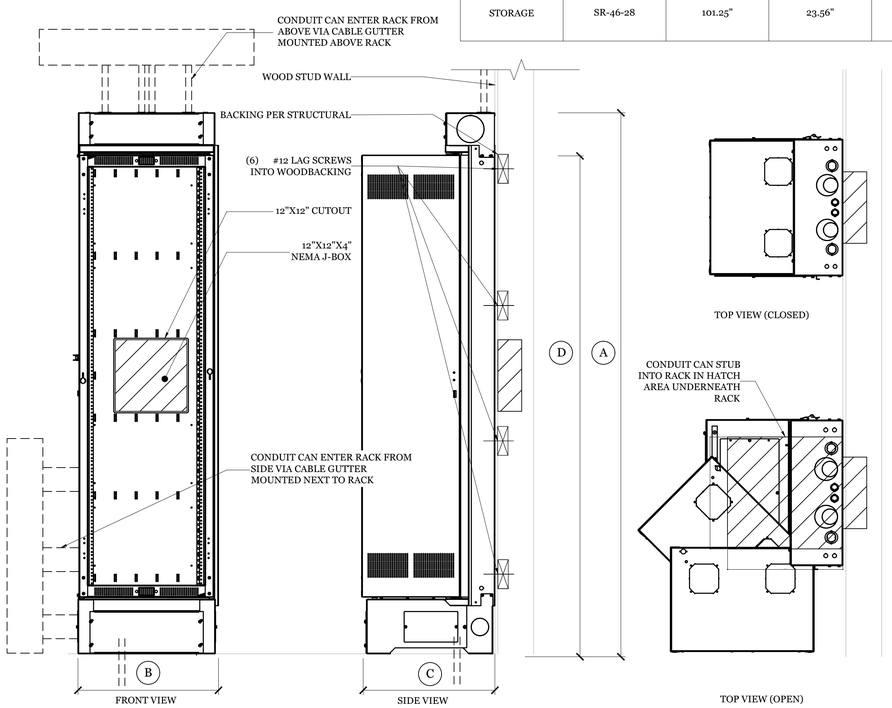

1 SR EQUIPMENT RACK MOUNTING
1"=1'-0"

EMPTY WEIGHT: 270 LBS
EQUIPMENT WEIGHT: 230 LBS
TOTAL MAX WEIGHT: 500 LBS

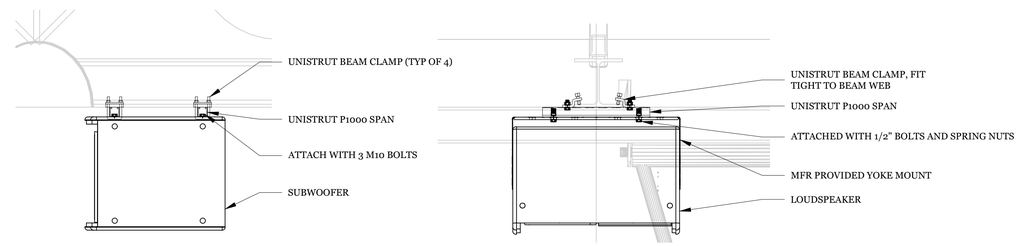

2 SUBWOOFER MOUNTING
1"=1'-0"

TOTAL MAX WEIGHT: 110 LBS

3 LOUDSPEAKER MOUNTING
1"=1'-0"

TOTAL MAX WEIGHT: 60 LBS

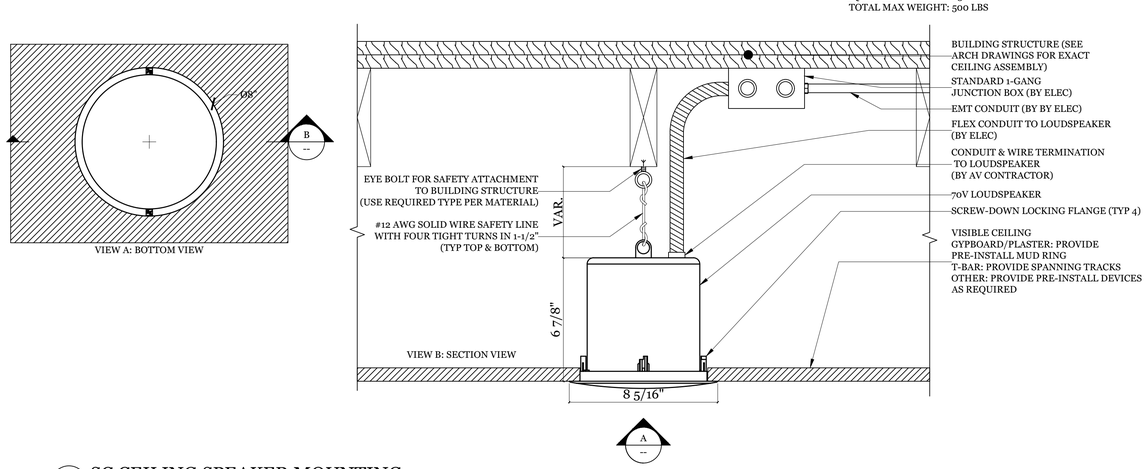

4 SC CEILING SPEAKER MOUNTING
3"=1'-0"

THIS DEVICE WEIGHS LESS THAN 20 LBS.

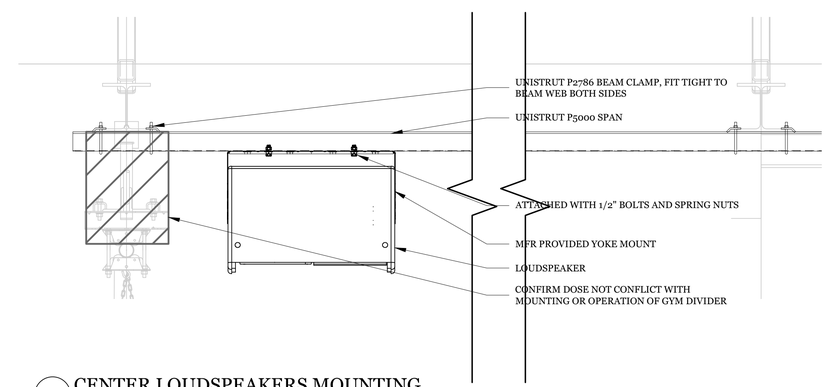

5 CENTER LOUDSPEAKERS MOUNTING
1"=1'-0"

TOTAL MAX WEIGHT: 70 LBS

QUATTROCCHI KWOK ARCHITECTS

Main:
636 Fifth Street, Santa Rosa, CA 95404
East Bay:
55 Harrison Street, Suite 525,
Oakland, CA 94607
(707) 576-0829

The Shalleck Collaborative Inc.
Planning and Design of Theatres | Production Systems | AV
1533 Martin Luther King Jr Way
Berkeley, CA 94709
tel 415-956-4100
www.shalleck.com

FREEDOM HIGH SCHOOL

NEW AUXILIARY GYMNASIUM

1050 NEROLY RD,
OAKLEY, CA 94561

LIBERTY UNION HIGH SCHOOL DISTRICT

REVISIONS

DSA APP NO. 01-119278

ARCH PROJECT NO: 1869.00
DRAWN BY:
DRAWING SCALE:
PTN: 61721-78 FILE NO: 7-H4

BID DOCUMENT

APRIL 27, 2021

SHEET TITLE

AV MOUNTING DETAILS

SHEET NUMBER

AV-M8.1

FREEDOM HS

OAKLEY, CA

INDEX OF SHEETS

PAGE	DESCRIPTION
A00	TITLE SHEET
A01	PLAN VIEW
A02	SECTION VIEW
A03	DETAILS

DSA PC APPROVED DRAWINGS 02-116269

S1	COVER SHEET
S2	10" RISE PLAN, ELEVATION & FRAMING
S4	DECK & SEAT ASSEMBLIES
S5	NARROW IDS POWER SYSTEM
S7	POST ASSEMBLIES
S8	POST ASSEMBLIES CONT.
S9	DECK SUPPORTS
S10	DECK SUPPORTS CONT.
S11	BRACING
S12	BRACING CONT.
S13	WALL ATTACHMENT DETAILS
S15	END RAILS
S16	AISLE STEPS
S17	AISLE HANDRAIL
S18	ACCESSIBLE SPACES
S19	ACCESSIBLE SPACES CONT.
S20	DIMENSIONS

NOTES:

ALL VERIFIABLE DIMENSIONS ARE SUBJECT TO CHANGE PENDING FIELD VERIFICATION.

FLOOR SHALL BE SMOOTH AND LEVEL WITH SLOPE NOT TO EXCEED 1/2" IN 10'-0" IN ACCORDANCE WITH CBC REQUIREMENTS.

IF WALL COLUMNS OR OTHER OBSTRUCTIONS ARE NOT IN PROVIDED LOCATIONS, ADJUST PER SITE, LOCATION, METAL IN DETAIL

APPLICABLE CODE: CBC 2016

BLEACHER SUMMARY

BLEACHERS: GROUP 1
MODEL: VERSATRACT
STAND TYPE: WALL ATTACHED
RISE: 10"
ROW SPACING: 24"

FIELD SUMMARY

FLOOR CONSTRUCTION: WOOD
WALL CONSTRUCTION: WOOD STUD/BLKG
ATTACHMENT TYPE: LOWER WALL

ACCESSORIES:

ELECTRIC WITH PENDANT CONTROL
FOOT LEVEL AISLE WITH INT. AISLE STEPS
REMOVEABLE FRONT AISLE STEP
SMART AISLE RAILS
SELF STORING END RAILS
INFINITY SEATS
END CURTAINS

VersaTract
DRAFTER: DATE:
ISC JOB #:

A SEPERATE PROJECT APPLICATION FOR CONSTRUCTION IS REQUIRED

STAMP HERE

DSA STAMP HERE

DSA FILE:
DSA APPL. #:
PC NUMBER:

REV.	DATE	DESCRIPTION

☐ (CHECK OPTION BOX IF APPLIES TO PROJECT SPECIFIC USE)

IRWIN SEATING COMPANY
TELESCOPIC DIVISION
125 ROUTE 46 EAST
PO BOX 525
FAIRFIELD, NJ 07004-0525
Toll Free: (877) 347-0102
Phone: (973) 882-0100
Fax: (973) 443-0539
www.irwinseating.com

TITLE SHEET

SHEET #
A00

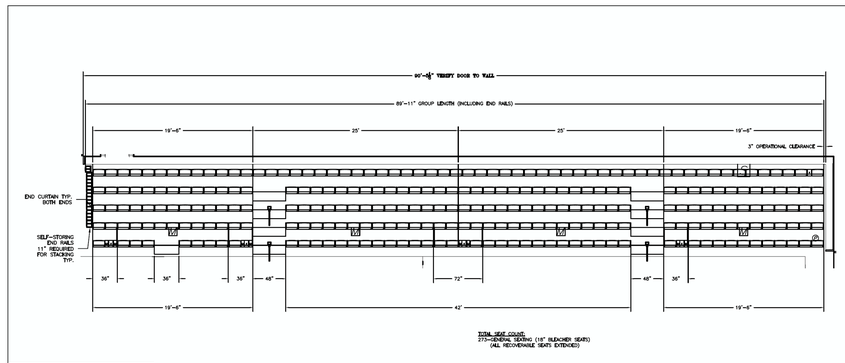

1 GROUP 1 PLAN
Scale: 1/8"=1'-0" Ref

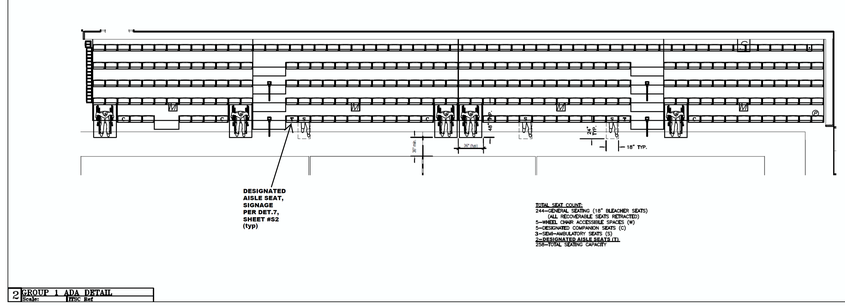

2 GROUP 1 ADA DETAIL
Scale: 1/8"=1'-0" Ref

PLAN NORTH

N VERIFY

REQUIREMENTS:
VERSATRACT

XX-X'-X" Group Length including end rails
(X Rectangular Sections)

5 Rows
10" Rise
24" Spacing
T&G Plankum 5/8" Decking
Standard 11 ½ inch Deck Level Filler
Wall Attached
Pressure Treated Wall Stringers
208-230 VAC, Three Phase EC5 Power
XXX 10" Infinity Seat (18" Wide Seats)
Tread Mounted on Telescopic
1 Set (Starter) Storing End Rails
(Starter Set Row 2)
1-Scorer's Table
2-End Curtains
5-36"x28" Recov. Wheel Chair Spaces
Wheelchair Signage
Companion Signage
Galvanized Nose and Rear Beam
2 Aisles 48" inches wide
Smart Rail aisle rail
Removable Front Aisle step including Front Step
2-DESIGNATED AISLE SEATS WITH ISA SIGNAGE
Seating Capacity: XX+5 Recoverable
Wheel Chair Spaces

MATERIALS AND FINISHES

	MATERIAL	FINISH
Decking:	"Plankum" Composite	Colored
Riser Beam:	A500 Steel	Galvanized
Nose Beam:	A500 Steel	Galvanized
Understructure:	Steel	Black Powder Coat
Guard Rails:	A1008 Steel	Black Powder Coat
Stand Rails:	A1008 Steel	Black Powder Coat
Aisle Steps 1:	11 Ga. Steel	Black Powder Coat
Aisle Steps 2:	11 Ga. Steel	Black Powder Coat
Curtains:	Tarp Vinyl	6oz
End Panel:	N/A	N/A
Guard Panel:	N/A	N/A
Seat Type 1:	N/A	6oz
Seat Type 2:	N/A	N/A

DSA STAMP HERE

STAMP HERE

VersaTract
DRAFTER: GAV DATE: 12-01-2020
ISC JOB #: 0202136

FREEDOM HIGH SCHOOL-AUX GYM
OAKDALE, CA.

A SEPERATE PROJECT APPLICATION FOR CONSTRUCTION IS REQUIRED

DSA FILE: XXX
DSA APPL. #: XXX
PC NUMBER: XXX

REV	DATE	DESCRIPTION	SIGN DATE
0	02/12/20	BASE PROJECT	GAV 02/12/2020

☐ (CHECK OPTION BOX IF APPLIES TO PROJECT SPECIFIC USE)

IRWIN SEATING COMPANY
TELESCOPIC DIVISION
125 ROUTE 46 EAST
PO BOX 525
FAIRFIELD, NJ 07004-0525
Toll Free: (877) 347-0102
Phone: (973) 882-0100
Fax: (973) 443-0539
www.irwinseating.com

PLAN

SHEET #
A01

QUATTROCCHI KWOK ARCHITECTS

Main:
636 Fifth Street, Santa Rosa, CA 95404
East Bay:
55 Harrison Street, Suite 525,
Oakland, CA 94607
(707) 576-0829

LICENSED ARCHITECT
JIM THEISS
LICENSE # C22643
EXP JUNE 30, 2021
STATE OF CALIFORNIA

SIGNED: MAY 5, 2021

FREEDOM HIGH SCHOOL

NEW AUXILIARY GYMNASIUM

1050 NEROLY RD,
OAKLEY, CA 94561

LIBERTY UNION HIGH SCHOOL DISTRICT

DSA APP NO. 01-119278

ARCH PROJECT NO: 1869.00
DRAWN BY:
DRAWING SCALE:
PTN: 61721-78 FILE NO: 7-H4

BID DOCUMENT

APRIL 27, 2021

SHEET TITLE

A00: TITLE SHEET
A01: PLAN VIEW

SHEET NUMBER

B1

BIMcloud: archiserver - BIMcloud Basic for ARCHICAD 22/1869.00 Freedom HS Aux. Gym SD, 22;11/17/2020;1:29 PM

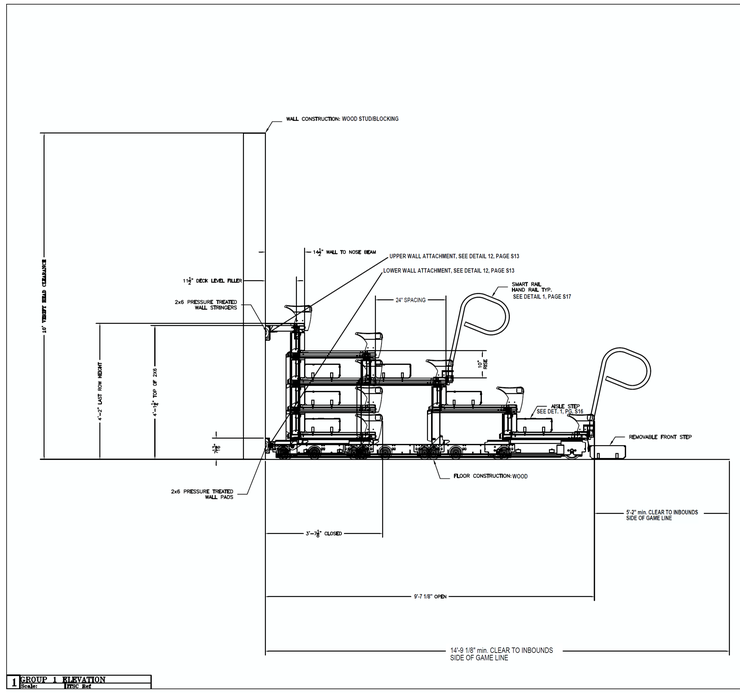

1 GROUP 1 ELEVATION
Scale: 1/8"=1' DSC Set

REQUIREMENTS: VERSATRACT

DSA STAMP HERE

STAMP HERE

VersaTract

DRAFTER: GAV DATE: 12-01-2020
ISC JOB #: G202136

FREEDOM HIGH SCHOOL-AUX GYM
OAKDALE, CA.

A SEPERATE PROJECT APPLICATION FOR CONSTRUCTION IS REQUIRED

DSA FILE: XXX
DSA APPL. #: XXX
PC NUMBER: XXX

REV	DATE	DESCRIPTION	SIGN OFF
0	12/01/20	MADE PROSPECTS	GAV

☐ (CHECK OPTION BOX IF APPLIES TO PROJECT SPECIFIC USE)

IRWIN SEATING COMPANY
TELESCOPIC DIVISION
1165 TOWER LANE EAST
PO BOX 1328
ALTAMONT, IL 62411
Toll Free: (800) 457-5123
Phone: (618) 483-6157
Fax: (618) 483-5539
www.irwinseating.com

SECTION

SHEET #
A02

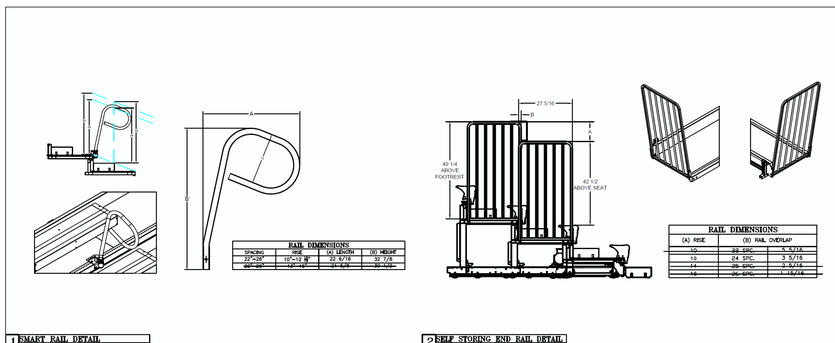

RAIL DIMENSIONS			
SPACING	RISE	(A) LENGTH	(B) HEIGHT
22"–24"	10"–12 ½"	22 9/16	32 7/8
26"–28"	13"–15"	24 9/16	35 1/2

RAIL DIMENSIONS		
(A) RISE	(B) RAIL OVERLAP	
10	22 5/8"	4 5/16
10	24 5/8"	3 5/16
14	26 5/8"	3 5/16
15	26 5/8"	1 15/16

1 SMART RAIL DETAIL
Scale: N.T.S. DSC Set

2 SELF STORING END RAIL DETAIL
Scale: N.T.S. DSC Set

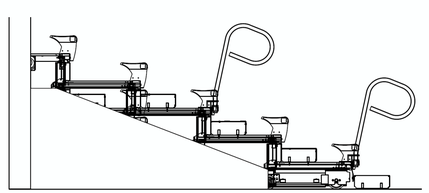

3 GROUP 1 END CURTAIN DETAIL
Scale: 1"=1' DSC Set

REQUIREMENTS: VERSATRACT

DSA STAMP HERE

STAMP HERE

VersaTract

DRAFTER: GAV DATE: 12-01-2020
ISC JOB #: G202136

FREEDOM HIGH SCHOOL-AUX GYM
OAKDALE, CA.

A SEPERATE PROJECT APPLICATION FOR CONSTRUCTION IS REQUIRED

DSA FILE: XXX
DSA APPL. #: XXX
PC NUMBER: XXX

REV	DATE	DESCRIPTION	SIGN OFF
0	12/01/20	MADE PROSPECTS	GAV

☐ (CHECK OPTION BOX IF APPLIES TO PROJECT SPECIFIC USE)

IRWIN SEATING COMPANY
TELESCOPIC DIVISION
1165 TOWER LANE EAST
PO BOX 1328
ALTAMONT, IL 62411
Toll Free: (800) 457-5123
Phone: (618) 483-6157
Fax: (618) 483-5539
www.irwinseating.com

DETAILS

SHEET #
A06

QUATTROCCHI KWOK ARCHITECTS
Main:
636 Fifth Street, Santa Rosa, CA 95404
East Bay:
55 Harrison Street, Suite 525,
Oakland, CA 94607
(707) 576-0829

LICENSED ARCHITECT
JIM THEISS
LICENSE # C22643
EXP JUNE 30, 2021
STATE OF CALIFORNIA

SIGNED: MAY 5, 2021

FREEDOM HIGH SCHOOL

NEW AUXILIARY GYMNASIUM

1050 NEROLY RD,
OAKLEY, CA 94561

LIBERTY UNION HIGH SCHOOL DISTRICT

DSA APP NO. 01-119278

ARCH PROJECT NO: 1869.00
DRAWN BY:
DRAWING SCALE:
PTN: 61721-78 FILE NO: 7-H4

BID DOCUMENT

APRIL 27, 2021

SHEET TITLE

A02: SECTION VIEW
A03: DETAILS

SHEET NUMBER

B2

BIMcloud: archiserver - BIMcloud Basic for ARCHICAD 22/1869.00 Freedom HS Aux. Gym SD_22;11/17/2020;1:29 PM

SPECIFICATION FOR TELESCOPIC **EQUIPMENT**

1. MATERIAL SPECIFICATION
1.1 STEEL COMPNENTS
1.1.1 STRUCTURAL STEEL: ANGLES CHANNELS, FLATS: ASTM A36
1.1.2 SHEET STEEL: 16, 14, AND 10 GAUGE HOT ROLLED: ASTM A1011 - FY = 50KSI MINIMUM
1.1.3 SUPPORT COLUMNS - 14 GAUGE RECTANGULAR TUBING, COLD FORMED: ASTM A500B - FY=46 KSI MINIMUM
1.1.4 NOSE AND REAR BEAMS: GALVANIZED COIL STEEL 14 GAUGE: ASTM A653 GRADE 50 FY=50KSI MINIMUM
1.1.5 NOSE AND REAR BEAMS: HOT ROLLED COIL STEEL 14 GAUGE: ASTM A1011 GRADE 50 FY=50KSI MINIMUM
1.1.6 LATERAL BRACING: 14 GAUGE RECTANGULAR TUBING, COLD FORMED ASTM A500B - FY=46 KSI MINIMUM
1.1.7 HORIZONTAL BRACING: 14 GAUGE RECTANGULAR TUBING, COLD FORMED ASTM A500B - FY=46 KSI MINIMUM
1.1.8 HORIZONTAL BRACING: FLAT BAR: ASTM A36
1.1.9 DECK SUPPORT ASSEMBLY: 14 GA COIL STEEL ASTM A1011 FY=50 KSI
1.1.10 SKIRT: 14 GAUGE. COIL STEEL: ASTM A1011 - FY=40 KSI MINIMUM
1.1.11 GUARDRAIL TUBING: ASTM A500 - GRADE B (FY=46KSI)
1.1.12 HANDRAIL TUBING: ASTM A513 - GRADE B (FY=46KSI)
1.1.13 FASTENERS - STRUCTURAL (BOLTS): SAE GRADE 5 (ASTM EQUIVALENT: ASTM A449) U.N.O.
1.1.14 PLASTIC SEAT MODULE:
1.1.14.1 MATERIAL HDPE -CO-POLYMER CERTENE HI-752 OR EQUIVALENT
1.1.14.2 DENSITY .952 G/CM3 +/-.10
1.1.14.3 CHEMICAL - FAMILY POLYOLEFIN
1.1.14.4 RECYLCE CODE NO. 2
1.2 WOOD SEAT LUMBER
1.2.1 WOODEN BLEACHER BOARDS ARE MADE FROM GRADE C & BETTER SOUTHERN YELLOW PINE THAT IS UPGRADED TO MEET THE GRADING STANDARDS FOR GRADE B & BETTER. STANDARD GRADING RULES ARE ESTABLISHED BY THE SOUTHERN PINE INSPECTION BUREAU AND APPROVED BY THE BOARD OF REVIEW OF THE AMERICAN LUMBER STANDARDS COMMITTEE.
1.3 PANELAM DECKING
1.3.1 0.030 THICK HIGH DENSITY POLYETHYLENE OVERLAY ON APA RATED 5/8" OR 3/4" BCX SANDED PLYWOOD U.S. PRODUCT STD. CONFORMING TO VOLUNTARY PRODUCT STANDARD PS 1-07 FOR CONSTRUCTION AND INDUSTRIAL PLYWOOD PUBLISHED BY THE NATIONAL BUREAU OF STANDARDS, FEBRUARY 26, 2007 PLYWOOD IS EXTERIOR GRADE, 5 PLY CONSTRUCTION, PLIES ARE GROUP 1 FIR.
1.4 WALL ATTACHMENT LUMBER
1.4.1 SOUTHERN PINE, PRESSURE TREATED NO. 1 DENSE; ALLOWABLE BENDING STRESS FOR FLAT USE 1750PSI (NDS, 2012, TABLE, 4B)
1.5 ARCHITECT OF RECORD TO VERIFY THAT THESE MATERIALS ARE SUITABLE TO BE INSTALLED IN THE BUILDING.

2. EXECUTION
2.1 ALL WELDING SHALL CONFORM TO THE 2016 CALIFORNIA BUILDING CODE (CBC) SECTIONS 2204A. 1 TITLE 24, OF CALIFORNIA CODE OF REGULATIONS (CCR)
2.2 ALL WELDING SHALL BE INSPECTED IN ACCORDANCE WITH 2016 CBC SECTION 1705A.2.1. AND SHALL BE PERFORMED DURING PRODUCT FABRICATION AT THE FACILITY OF MANUFACTURING.
2.3 ALL MEMBERS AND DETAILS SHALL BE AS ON THE LOAD TESTED STAND OR AS SUBSEQUENTLY APPROVED BY CALCULATIONS, WHICHEVER APPLIES.
2.4 BEND, TENSION, AND ELONGATION TESTS SHALL BE RAN ON REPRESENTATIVE SAMPLES OF EACH OF THE MATERIALS ITEMIZED IN SECTION I.A OF THESE SPECIFICATIONS IN ACCORDANCE WITH THE REQUIREMENTS OF THE APPLICABLE ASTM SPECIFICATION AND SECTION 2203A.1 TITLE 24 OF CCR.
2.5 FABRICATION SHALL CONFORM TO CBC CHAPTER 22A, TITLE 24 OF CCR AND IR 16-5.16

3. CERTIFICATION:
THE FOLLOWING CERTIFICATIONS SHALL BE SUBMITTED TO THE DIVISION OF THE STATE ARCHITECT UPON COMPLETION OF THE PROJECT PER IR 16-5.16 (BY THE BLEACHER MANUFACTURER).
3.1 STEEL CERTIFICATION
3.1.1 DSA AND THE STRUCTURAL ENGINEER SHOULD AGREE ON A LIST OF PARTS WHICH ARE TO BE TESTED. THE ENGINEER SHOULD NOTIFY THE MANUFACTURER OF THIS LIST OF STEEL REQUIRING TESTING.

THE BLEACHER CONTRACTOR WILL FURNISH TO THE STATE, VIA THE STRUCTURAL ENGINEER, PERIODIC REPORTS OF STOCK STEEL PURCHASED FOR USE IN BLEACHERS, AND INCLUDE IN THE REPORT THE MILL TEST REPORT OF THE STEEL PURCHASED AND ONE TENSION AND BEND TEST MADE BY AN INDEPENDENT LABORATORY FOR EACH 10 TONS PURCHASED. WHEN MILL TEST REPORTS CANNOT BE FURNISHED ONE TENSION AND BEND TEST WILL BE MADE FOR EACH 5 TONS OF STEEL. A CURRENT REPORT SHOULD BE INCLUDED WITH EACH PROJECT SUBMITTED FOR STATE APPROVAL.
3.2 WELDER AND WELDING CERTIFICATION
3.2.1 TO BE PERFORMED BY CERTIFIED PROFESSIONAL WELDING OPERATORS IN ACCORDANCE WITH AMERICAN WELDING SOCIETY, (AWS), D1.1 "STRUCTURAL WELDING CODE-STEEL".
3.2.2 WITH EACH BLEACHER THE MANUFACTURER WILL SEND DSA A VERIFIED REPORT MADE BY A QUALIFIED PROFESSIONAL ENGINEER, STATING THE FOLLOWING:
3.2.2.1 WELDS ON THIS BLEACHER HAVE BEEN MADE BY OPERATORS WHO HAVE BEEN PREVIOUSLY QUALIFIED BY TESTS, AS PRESCRIBED IN THE QUALIFICATION SECTION OF THE STRUCTURAL WELDING CODE OF THE AMERICAN WELDING SOCIETY, TO PERFORM THE TYPE OF WORK REQUIRED.
3.2.2.2 I HAVE SELECTED AN A.W.S. C.W.I. TO ACT AS WELDING INSPECTOR. I CERTIFY HIM TO BE EXPERIENCED IN INSPECTION OF ARC WELDS ON WORK REQUIRING UNQUESTIONED RELIABILITY, AND THAT HE HAS THE ABILITY TO DISTINGUISH BETWEEN SOUND AND UNSOUND WELDING.
3.2.3 WITH EACH BLEACHER, THE WELDING INSPECTOR WILL SEND DSA A VERIFIED REPORT STATING:
3.2.3.1 I HAVE CHECKED THE EQUIPMENT AND FIND IT ADEQUATE AND HAVE CHECKED THE ABILITY OF THE WELDERS AND FOUND THEM SATISFACTORY.
3.2.3.2 I HAVE INSPECTED ALL THE WELDING AND FOUND IT PROPER AND IN CONFORMITY WITH THE PLANS AND SPECIFICATIONS AND CHAPTER 22, TITLE 24, CCR. I HAVE USED ALL NECESSARY TESTS TO ASSURE MYSELF OF THE ADEQUACY OF THE WELDING.

4. DESIGN LOADS
4.1 AS SPECIFIED IN 2016 CBC TABLE 1607.A.1, ITEM 24 AND ICC 300-2012
4.1.1 DEAD LOAD
4.1.1.1 WEIGHT OF BLEACHER COMPONENTS THAT CONTRIBUTE TO THE GRAVITY LOAD(S) WITHIN A GIVEN LOAD PATH
4.1.2 LIVE LOAD
4.1.2.1 A UNIFORMLY DISTRIBUTED VERTICAL LIVE LOAD OF NOT LESS THAN 100 LBS. PER SQ. FT. (4788 PA) OF GROSS HORIZONTAL PROJECTION. (TABLE 1607A.1, ITEM 24 AND ICC 300-2012)
4.1.2.2 SEATBOARDS AND FOOTRESTS SHALL BE DESIGNED FOR A VERTICAL LIVE LOAD OF NOT LESS THAN 120LBS PER LINEAR FOOT (1.752 KN/M). (ICC 300-2012)
4.1.3 HORIZONTAL SWAY: (ICC 300-2012)
4.1.3.1 24 LBS/FT (0.350 KN/M) PARALLEL TO SEAT LENGTH
4.1.3.2 10 LBS/FT (0.146 KN/M) PERPENDICULAR TO SEAT LENGTH
4.1.4 ALL COLUMNS
4.1.3.1 HAVE A SLENDERNESS RATIO OF LESS THAN 200
4.1.3.2 HAVE LATERAL BRACING THAT ACTS AS TENSION OR COMPRESSION BRACING (SEISMIC DESIGN LOAD ASCE/SEI 7)
4.1.5 SEISMIC CRITERIA:
SDS = ____ (2.44 MAX.)
R_{PERP}=2.5 AP_{PERP}=1.0 IP=1.0
R_{PAR}=1.25 AP_{PAR}=2.5
ASSUME:
OCCUPANCY CAT. III (ASCE 7-10, TABLE 1-1)
SEISMIC DESIGN CAT. D (ASCE 7-10, 11.6)

5. REFERENCES: CBC 2016
5.1 REFERENCES PER CBC 2016 CHAPTER 35 AND AS NOTED BELOW
5.1.1 NATIONAL DESIGN SPECIFICATION FOR WOOD CONSTRUCTION (NDS 2015) AMERICAN FOREST & PAPER ASSOC.
5.1.2 PANEL DESIGN SPECIFICATION (APA PDS-04) AMERICAN PLYWOOD ASSOCIATION - ENGINEERED WOOD ASSOC.
5.1.3 2016 CALIFORNIA BUILDING CODE
5.1.4 DSA IR 16-5.16
5.1.5 NORTH AMERICAN SPECIFICATION FOR THE DESIGN OF COLD FORMED STEEL STRUCTURAL MEMBERS (NAS) REFERENCE: S100-12/S2-10 AMERICAN IRON AND STEEL INSTITUTE.
5.1.6 STEEL CONSTRUCTION MANUAL - 14 TH EDITION (ASD) AMERICAN INSTITUTE OF STEEL CONSTRUCTION
5.1.7 AWS STRUCTURAL WELDING CODE - STEEL (D1.1-10)
5.1.8 AWS STRUCTURAL WELDING CODE - SHEET STEEL (D1.3-08)
5.1.9 ICC STANDARD ON BLEACHERS, FOLDING AND TELESCOPIC SEATING AND GRANDSTANDS (ICC 300-2012) INTERNATIONAL CODE COUNCIL, INC.
5.1.10 MINIMUM DESIGN LOADS FOR BUILDINGS AND OTHER STRUCTURES(ASCE 7-10) AMERICAN SOCIETY OF CIVIL ENGINEERS / STRUCTURAL ENGINEERING INSTITUTE.
5.2 TITLE 24 CODES
5.2.1 PART 1 2016 CALIFORNIA ADMINISTRATION CODE
5.2.2 PART 2 2016 CALIFORNIA BUILDING CODE VOLUME 1 & 2
5.2.3 PART 2.5 2016 CALIFORNIA RESIDENTIAL CODE
5.2.4 PART 3 2016 CALIFORNIA ELECTRICAL CODE
5.2.5 PART 4 2016 CALIFORNIA MECHANICAL CODE
5.2.6 PART 5 2016 CALIFORNIA PLUMBING CODE
5.2.7 PART 6 2016 CALIFORNIA ENERGY CODE
5.2.8 PART 8 2016 CALIFORNIA HISTORICAL BUILDING CODE
5.2.9 PART 9 2016 CALIFORNIA FIRE CODE
5.2.10 PART 10 2016 CALIFORNIA EXISTING BUILDING CODE
5.2.11 PART 11 2016 CALIFORNIA GREEN BUILDING STANDARDS CODE
5.2.12 PART 12 2016 CALIFORNIA REFERENCE STANDARDS

REFERENCE CODE SECTIONS FOR APPLICABLE STANDARDS
2016 CBC CHAPTER 35
~~2016 CFC CHAPTER 45~~

FLS: NEW SITE MUST COMPLY WITH ICC 300-2012 SECTION 102.1, CHAPTER 1 THRU 4.
EXISTING SITE MUST COMPLY WITH ICC 300-2012 SECTION 102.1, CHAPTER 1, 2, & 5 AND CFC SECTION 1030.
ACS: BLEACHERS ARE REQUIRED TO COMPLY WITH ACCESS COMPLIANCE REGULATIONS IN TITLE 24, VOLUME 1 OF 2
5.3 WELDING PROCESS
5.3.1 STRUCTURAL STEEL WELDING TO COMPLY WITH AWS D1.1-10 AND CHAPTER 22A OF THE 2016 CBC
5.3.2 SHEET METAL WELDING TO COMPLY WITH AWS D1.3 AND CHAPTER 22A OF THE 2016 CBC
5.3.3 STEEL TESTING CERTIFICATION TO COMPLY WITH CHAPTER 22A, SECTION 2203A.1 OF THE 2016 CBC
5.3.4 WELDING INSPECTOR AND WELDING INSPECTION TO COMPLY WITH CHAPTER 17A, SECTION 1705A OF 2016 CBC AND THE DIVISION OF STATE ARCHITECT INTERPRETATION OF REGULATION MANUAL.
5.3.5 QUALIFICATION OF WELDS AND INSPECTION OF WELDING MATERIAL TO COMPLY WITH DSA IR 16-5.16
5.3.6 WELDING ELECTRODE WILL CONFORM TO AWS A5.18, ASME SFA-S-18 ER70S-3 AND AWS A5.17 ASME SFA-5.17 EN14K 1E332-C AND 1E5591. CERTIFIED BY CSB TO CWA W48 (ER29S-3) (EEM13K)
5.3.7 CFC SECTIONS 2603; 2604; AND IF APPLICABLE 2605 AND2606

6. NOTE
6.1 WHEN A BLEACHER EXERTS A FORCE ON A WALL OF A BUILDING, THE BUILDING'S STRUCTURAL ENGINEER MUST REVIEW AND APPROVE THE ADDITIONAL LOADS CAUSED BY THE BLEACHER.
6.2 WHEN A BLEACHER EXERTS A FORCE ON THE FLOOR OF A BUILDING, THE BUILDING'S STRUCTURAL ENGINEER MUST REVIEW AND APPROVE THE ADDITIONAL LOADS CAUSED BY THE BLEACHER.

SITE SPECIFIC PROVISION:
THE FOLLOWING ARE SITE SPECIFIC REQUIREMENTS AND ARE OUTSIDE THE SCOPE OF AN PC SUBMITTAL CBC 1028.1.1; ICC 300-2012 CHAPTER 4 INCLUDING FLOOR PLANS, SEAT LAYOUT, EGRESS, SITE SUBMITTALS AND APPROVALS, AND APPROPRIATE INSPECTIONS.

OCCUPANCY GROUP A-4 SHALL APPLY FOR INTERIOR USE.
OCCUPANCY GROUP A-5 SHALL APPLY FOR OUTDOOR USE.
APPLICATION PROVISIONS OF 2016 CBC SECTION 1028 SHALL BE ADDRESSED VIA SPECIFIC SITE SUBMITTAL AND WITH THE ARCHITECT.

SITE SPECIFIC PROVISION:
#1. THE FOLLOWING ARE SITE SPECIFIC REQUIREMENTS AND ARE OUTSIDE THE SCOPE OF A PC SUBMITTAL: OCCUPANCY GROUP A-4

#2. ARCHITECT TO SUBMIT FLOOR PLANS, SEAT LAYOUT, EGRESS, RISE SUBMITTALS AND APPROVALS, AND APPROPRIATE INSPECTIONS.

#3. 2016 CBC SECTION 1028 - APPLICABLE PROVISIONS SHALL BE ADDRESSED WITH SITE SUBMITTAL BY ARCHITECT.

#4. ARCHITECT OF RECORD VERIFY MATERIALS SUITABLE FOR BUILDING INTERIOR.

#5. ANCHORS TO BE INSPECTED (DSA-103):
☑ UPPPER WALL ANCHORS
☑ LOWER WALL ANCHORS
☐ FLOOR ANCHORS

	SHEET	DESCRIPTON
✓	S1	COVER SHEET
✓	S2	10 RISE PLAN, ELEVATION & FRAMING
	~~S3~~	~~NOT USED~~
✓	S4	DECK & SEAT ASSEMBLIES
✓	S5	NARROW IDS POWER SYSTEM
	~~S6~~	~~NOT USED~~
✓	S7	POST ASSEMBLIES
✓	S8	POST ASSEMBLIES CONT.
✓	S9	DECK SUPPORTS
✓	S10	DECK SUPPORTS CONT.
✓	S11	BRACING
✓	S12	BRACING CONT.
✓	S13	WALL ATTACHMENT DETAILS
	~~S14~~	~~NOT USED~~
✓	S15	END RAILS
✓	S16	AISLE STEPS
✓	S17	AISLE HANDRAILS
✓	S18	ACCESSIBLE SPACES
✓	S19	ACCESSIBLE SPACES CONT.
✓	S20	DIMENSIONS

DRAWINGS MARKED FOR:
FREEDOM HS
OAKLEY, CA
DSA FILE #: 01-0119278

DRAWING SYMBOLS LEGEND
THE SYMBOLS SHOWN BELOW ARE TYPICAL THROUGHOUT THIS SET OF DRAWINGS

X <======= Detail Number
X <======= Sheet Number
X <===== Material Number

ALL DIMENSIONS IN INCHES UNLESS NOTED OTHERWISE (U.N.O.)

VERSATRACT
DRAFTER: AZB DATE: 10/2/2017
ISC JOB #: PROES01
VERSATRACT (PRE-CHECK) CODE: 2016 CBC
A SEPERATE PROJECT APPLICATION FOR CONSTRUCTION IS REQUIRED
10/10/18
Larson Engineering Inc
DSA STAMP HERE
02 116269
DSA FILE: PC-ITSC
DSA APPL. #: 02-116269

REV.	DATE	DESCRIPTION

☐ (CHECK OPTION BOX IF APPLIES TO PROJECT SPECIFIC USE)

IRWIN SEATING COMPANY
TELESCOPIC DIVISION
US ROUTE 40 EAST
PO BOX 320
ALTAMONT, IL 62411
Toll Free: (877) 597-1122
Phone: (618) 483-6157
Fax: (618) 483-5539
www.irwinseating.com

COVER SHEET
SHEET #
S1

SEATING LAYOUT NOTE:
THIS ILLUSTRATION OF SEATING SHOWN IS NOT INTENDED TO REPRESENT AN ACTUAL SEATING PROJECT. THE INTENTION IS TO PROVIDE ARCHITECTURAL CALLOUTS THAT WILL DIRECT THE PLAN CHECKER TO THE APPROPRIATE DETAIL. REFER TO THE PROJECT SPECIFIC SUBMITTALS FOR SEATING LAYOUT.

AISLE WIDTH NOTE:
THIS ILLUSTRATION OF AISLE WIDTH SHOWN IS NOT INTENDED TO REPRESENT AN ACTUAL AISLE WIDTH OF A SEATING PROJECT. THE INTENTION IS TO PROVIDE ARCHITECTURAL CALLOUTS THAT WILL DIRECT THE PLAN CHECKER TO THE APPROPRIATE DETAIL. REFER TO THE PROJECT SPECIFIC SUBMITTALS FOR AISLE WIDTH

FOR REFERENCE ONLY, SEE A DRAWINGS FOR PROJECT SPECIFIC PLAN AND VIEW AND THE FOLLOWING S DRAWINGS FOR PROJECT SPECIFIC DETAILS

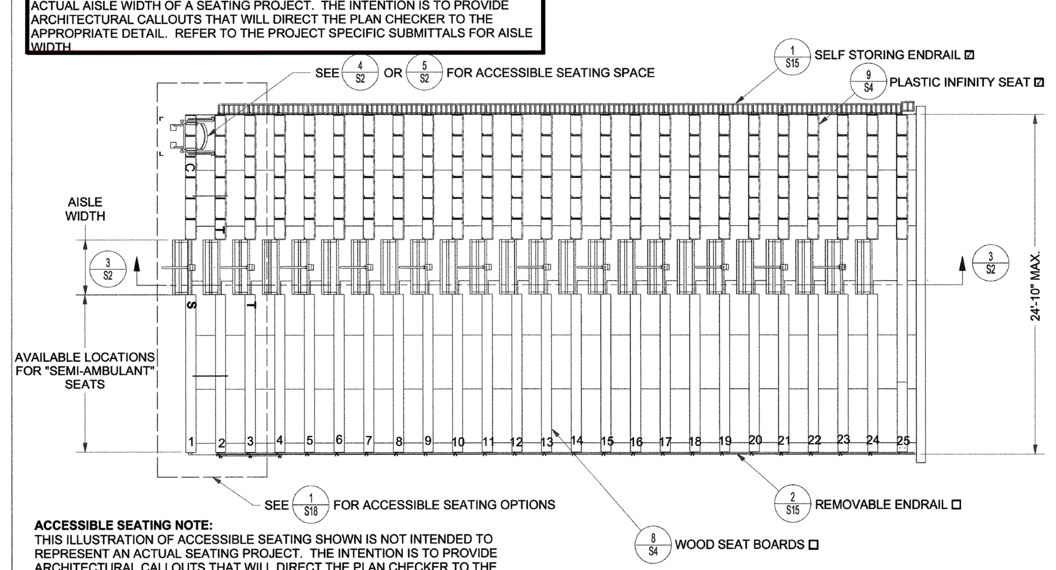

10" RISE PLAN VIEW - 25 ROWS 1
Scale: 1/64 ITSC Ref.:NA

ACCESSIBLE SEATING NOTE:
THIS ILLUSTRATION OF ACCESSIBLE SEATING SHOWN IS NOT INTENDED TO REPRESENT AN ACTUAL SEATING PROJECT. THE INTENTION IS TO PROVIDE ARCHITECTURAL CALLOUTS THAT WILL DIRECT THE PLAN CHECKER TO THE APPROPRIATE DETAIL. REFER TO THE PROJECT SPECIFIC SUBMITTALS FOR ACCESSIBLE SEATING LAYOUT.

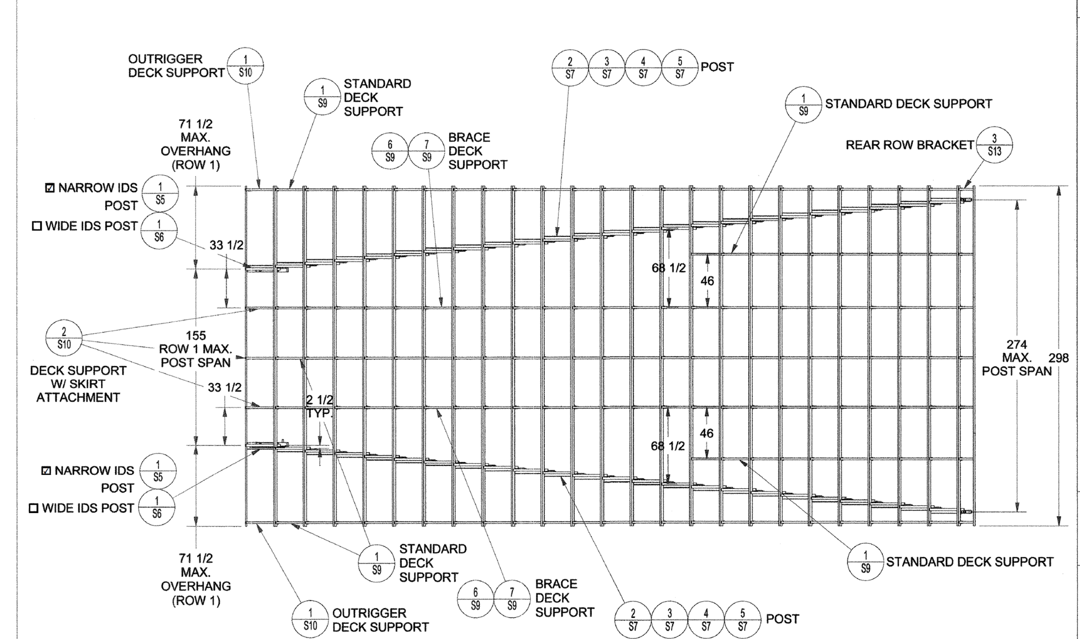

10" RISE FRAMING PLAN - 25 ROWS 2
Scale: 1/64 ITSC Ref.:N/A

MAX SPAN BETWEEN COMPONENTS = 70"
ALL DIMENSIONS GIVEN IN INCHES U.N.O.

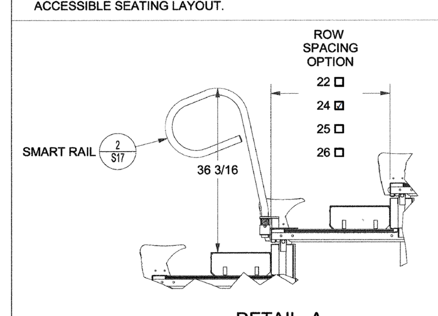

DETAIL A

(SAMPLE AISLE WIDTH CALCULATION PROVIDED BELOW)

Aisle Width Calculations

	ICC 300 Table 404.5(1) Indoor Smoke-Protected		ICC 300 Table 404.5(2) Non-Smoke Protected	
	10" Rise Bleacher	12" Rise Bleacher	10" Rise Bleacher	12" Rise Bleacher
Max. seats serviced by aisle:	270	270	180	180
Step Riser Height (in.):	5	6	5	6
Horzontal Distance to Handrail (in.):	<30	<30	<30	<30
Inches of Clear Width Per Seat Served:	0.2	0.2	0.3	0.3
Min Center Aisle Calculated Width:	54.0	54.0	54.0	54.0

Notes:
ICC 300 405.2-1: Min. aisle width 48" for aisle stairs having seating on each side
ICC 300 405.2-2: Min. aisle width 36" for aisle stairs having seating on only one side
ICC 300 405.6: Length of a dead end aisle shall not exceed 16 rows in a non-smoke protected assembly seating and 21 rows in a smoke protected assembly seating. (Exceptions 1 & 2 per 405.6)

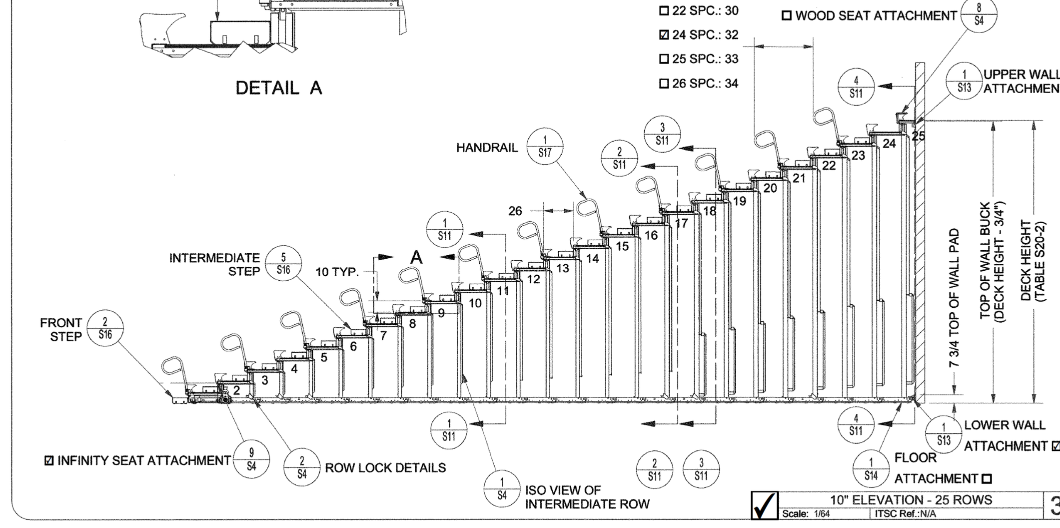

10" ELEVATION - 25 ROWS 3
Scale: 1/64 ITSC Ref.:N/A

RECOVERABLE TRUNCATION

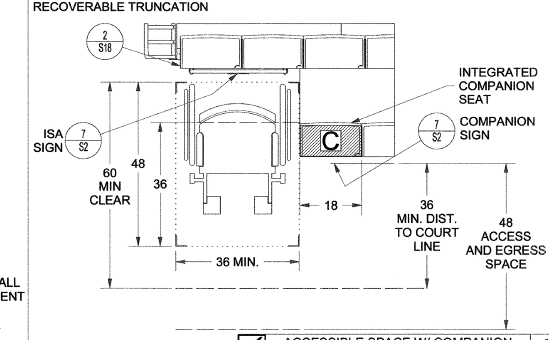

ACCESSIBLE SPACE W/ COMPANION 4
Scale: 3/64 ITSC Ref.:N/A

NOTE: ONLY APPLIES WHEN STRUCTURAL, MECHANICAL OR CONFIGURATION LIMITATIONS OF SEATING DOES NOT ALLOW FOR INTEGRATED COMPANION SEAT.

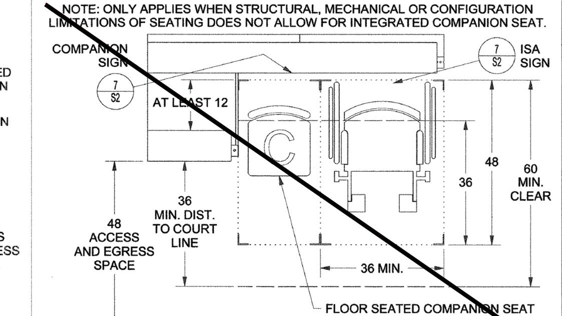

ACCESSIBLE SPACE W/ FLOOR COMP. 5
Scale: 3/64 ITSC Ref.:N/A

CHECKLIST 18 - ASSEMBLY USE AREAS (per CBC Table 11B-221.2.1.1)				
Seating Capacity	W	C	S	T
4 to 25	1	1	2	Min. of 5% of the total number of aisle seats. Identify per 11B-802.4.2.
26 to 50	2	2	2	
51 to 150	4	4	2	
151 to 300	5	5	~~2~~ 1%	
301 to 500	6	6	1%	
501 to 5000	6+1 per add'l 100 seats or fraction there of over 500	6+1 per add'l 100 seats or fraction there of over 500	1%	
Note: Additional signage to be provided at ticket booth				
Legend:	**W**	Wheelchair space		
	C	Companion seat		
	S	Semi-ambulant seat		
	T	Transfer or aisle seat		

Sand at least 2

ADA CHART 6
Scale: ITSC Ref.:N/A

INTERNATIONAL SYMBOL OF ACCESSIBILITY (ISA) TO BE INSTALLED AT ACCESSIBLE SEATING SPACES SIGN TO COMPLY w/ CBC 11B-703.7.2.1

COMPANION SIGNAGE TO BE INSTALLED AT COMPANION SEATING
DESIGNATED AISLE SIGNAGE,
~~TRANSFER SEAT SIGNAGE~~
TO BE INSTALLED AT ~~TRANSFER SEATING~~ DESIGNATED AISLE SEATING

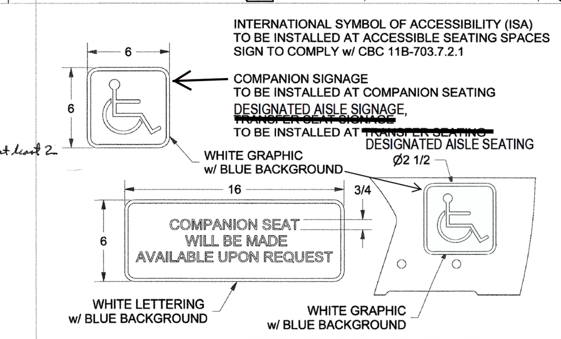

ACCESSIBILITY SIGNAGE 7
Scale: 3/16 ITSC Ref.:N/A

VERSATRACT
DRAFTER: AZB DATE: 10/2/2017
ISC JOB #: PROES01
VERSATRACT (PRE-CHECK) CODE: 2016 CBC
A SEPERATE PROJECT APPLICATION FOR CONSTRUCTION IS REQUIRED
10/10/18
Larson Engineering Inc
DSA STAMP HERE
02 116269
DSA FILE: PC-ITSC
DSA APPL. #: 02-116269

REV.	DATE	DESCRIPTION

☐ (CHECK OPTION BOX IF APPLIES TO PROJECT SPECIFIC USE)

IRWIN SEATING COMPANY
TELESCOPIC DIVISION
US ROUTE 40 EAST
PO BOX 320
ALTAMONT, IL 62411
Toll Free: (877) 597-1122
Phone: (618) 483-6157
Fax: (618) 483-5539
www.irwinseating.com

10 RISE PLAN, ELEVATION & FRAMING
SHEET #
S2

QUATTROCCHI KWOK ARCHITECTS
Main:
636 Fifth Street, Santa Rosa, CA 95404
East Bay:
55 Harrison Street, Suite 525,
Oakland, CA 94607
(707) 576-0829

LICENSED ARCHITECT
JIM THEISS
LICENSE # C22643
EXP JUNE 30, 2021
STATE OF CALIFORNIA
SIGNED: MAY 5, 2021

FREEDOM HIGH SCHOOL

NEW AUXILIARY GYMNASIUM

1050 NEROLY RD,
OAKLEY, CA 94561

LIBERTY UNION
HIGH SCHOOL
DISTRICT

DSA APP NO. 01-119278

ARCH PROJECT NO: 1869.00
DRAWN BY:
DRAWING SCALE:
PTN: 61721-78 FILE NO: 7-H4

BID DOCUMENT

APRIL 27, 2021

SHEET TITLE

S1: COVER SHEET
S2: 10" RISE PLAN, ELEVATION & FRAMING

SHEET NUMBER

B3

BIMcloud: archiserver - BIMcloud Basic for ARCHICAD 22/1869.00 Freedom HS Aux. Gym SD _22;11/17/2020;1:29 PM

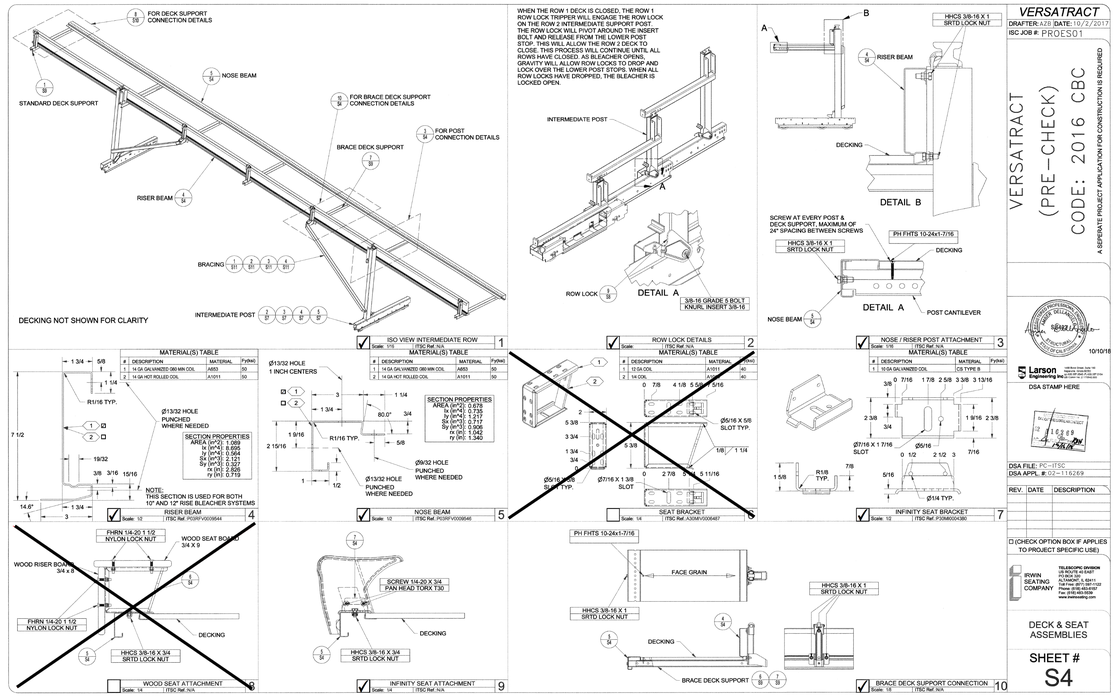

VERSATRACT
DRAFTER: AJB DATE: 10/2/2017
ISC JOB #: PROES01

VERSATRACT (PRE-CHECK) CODE: 2016 CBC

A SEPERATE PROJECT APPLICATION FOR CONSTRUCTION IS REQUIRED

10/10/18

Larson Engineering Inc.
1400 Bruce Drive, Suite 100
Lincoln, CA 95648
(916) 434-1999 Fax (916) 434-1994
www.larsonengineering.com

DSA STAMP HERE

DSA FILE: PC-ITSC
DSA APPL. #: 02-116269

REV.	DATE	DESCRIPTION

☐ (CHECK OPTION BOX IF APPLIES TO PROJECT SPECIFIC USE)

IRWIN SEATING COMPANY
TELESCOPIC DIVISION
125 ROUTE 20 EAST
P.O. BOX 1
ALTAMONT, IL 62411
Phone: (618) 483-6741
FM Fax: (618) 483-6747
Phone: (618) 483-6741
Fax: (618) 483-5539
www.irwinseating.com

DECK & SEAT ASSEMBLIES

SHEET #
S4

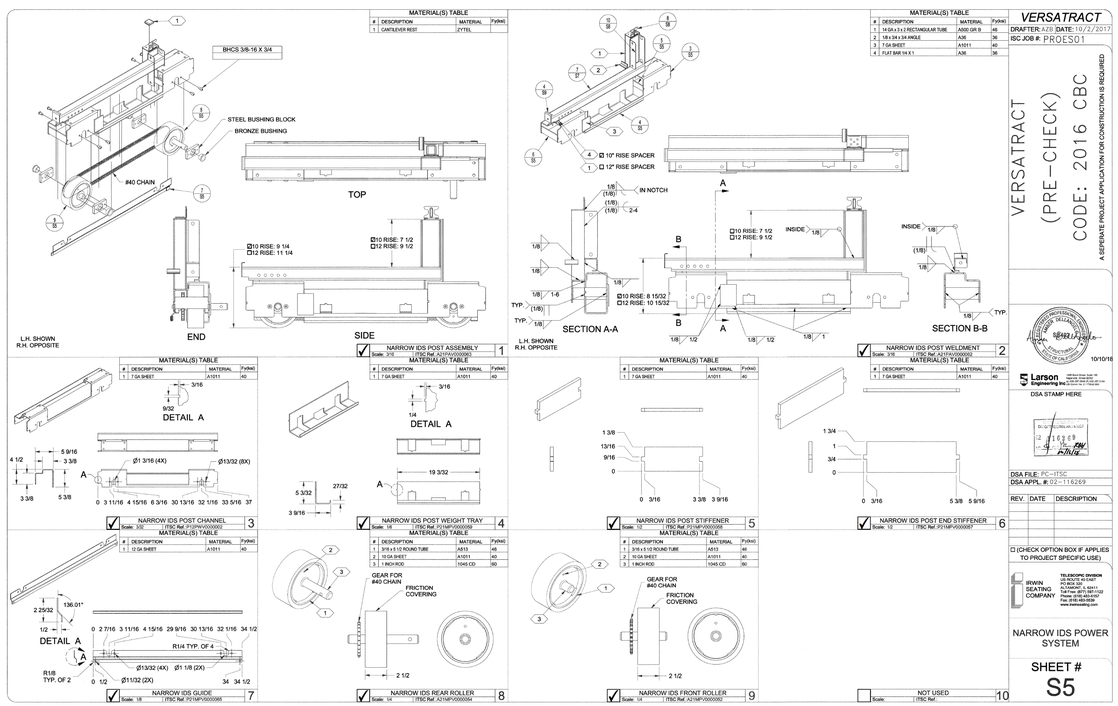

VERSATRACT
DRAFTER: AJB DATE: 10/2/2017
ISC JOB #: PROES01

VERSATRACT (PRE-CHECK) CODE: 2016 CBC

A SEPERATE PROJECT APPLICATION FOR CONSTRUCTION IS REQUIRED

10/10/18

Larson Engineering Inc.
1400 Bruce Drive, Suite 100
Lincoln, CA 95648
(916) 434-1999 Fax (916) 434-1994
www.larsonengineering.com

DSA STAMP HERE

DSA FILE: PC-ITSC
DSA APPL. #: 02-116269

REV.	DATE	DESCRIPTION

☐ (CHECK OPTION BOX IF APPLIES TO PROJECT SPECIFIC USE)

IRWIN SEATING COMPANY
TELESCOPIC DIVISION
125 ROUTE 20 EAST
P.O. BOX 1
ALTAMONT, IL 62411
Phone: (618) 483-6741
FM Fax: (618) 483-6747
Phone: (618) 483-6741
Fax: (618) 483-5539
www.irwinseating.com

NARROW IDS POWER SYSTEM

SHEET #
S5

QUATTROCCHI KWOK ARCHITECTS
Main:
636 Fifth Street, Santa Rosa, CA 95404
East Bay:
55 Harrison Street, Suite 525,
Oakland, CA 94607
(707) 576-0829

LICENSED ARCHITECT
JIM THEISS
LICENSE # C22643
EXP JUNE 30, 2021
STATE OF CALIFORNIA

SIGNED: MAY 5, 2021

FREEDOM HIGH SCHOOL

NEW AUXILIARY GYMNASIUM

1050 NEROLY RD,
OAKLEY, CA 94561

LIBERTY UNION HIGH SCHOOL DISTRICT

DSA APP NO. 01-119278

ARCH PROJECT NO: 1869.00

DRAWN BY:

DRAWING SCALE:

PTN: 61721-78 FILE NO: 7-H4

BID DOCUMENT

APRIL 27, 2021

SHEET TITLE

S4: DECK & SEAT ASSEMBLIES
S5: NARROW IDS POWER ASSY

SHEET NUMBER

B4

BIMcloud: archiserver - BIMcloud Basic for ARCHICAD 22/1869.00 Freedom HS Aux. Gym SD 22:11/17/2020:1:29 PM

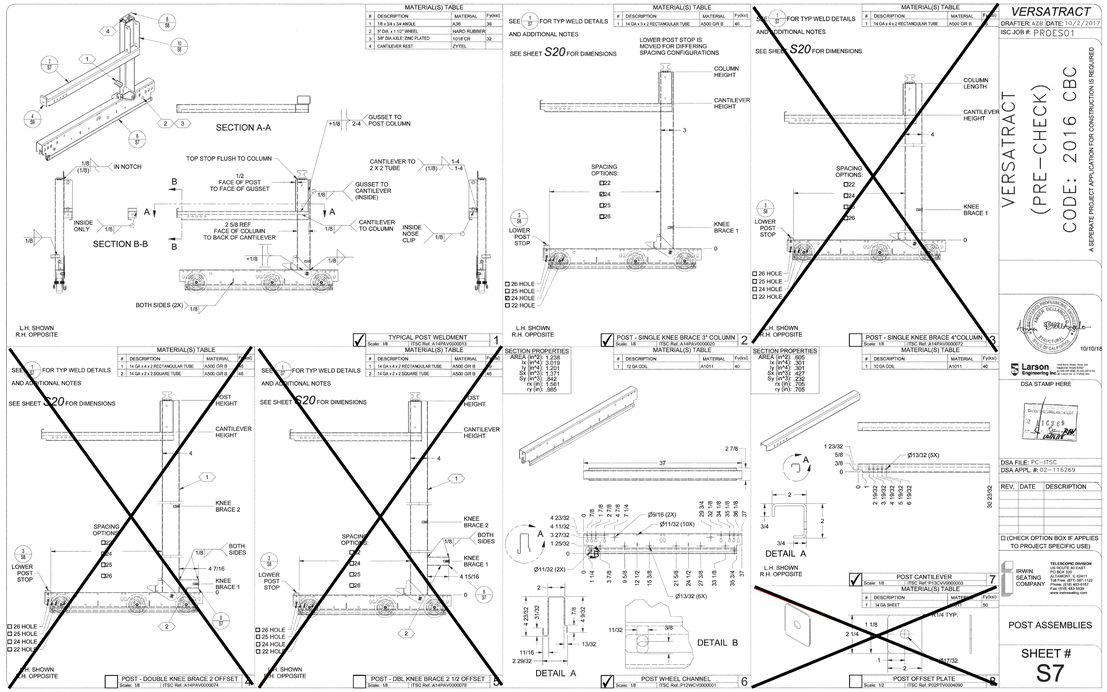

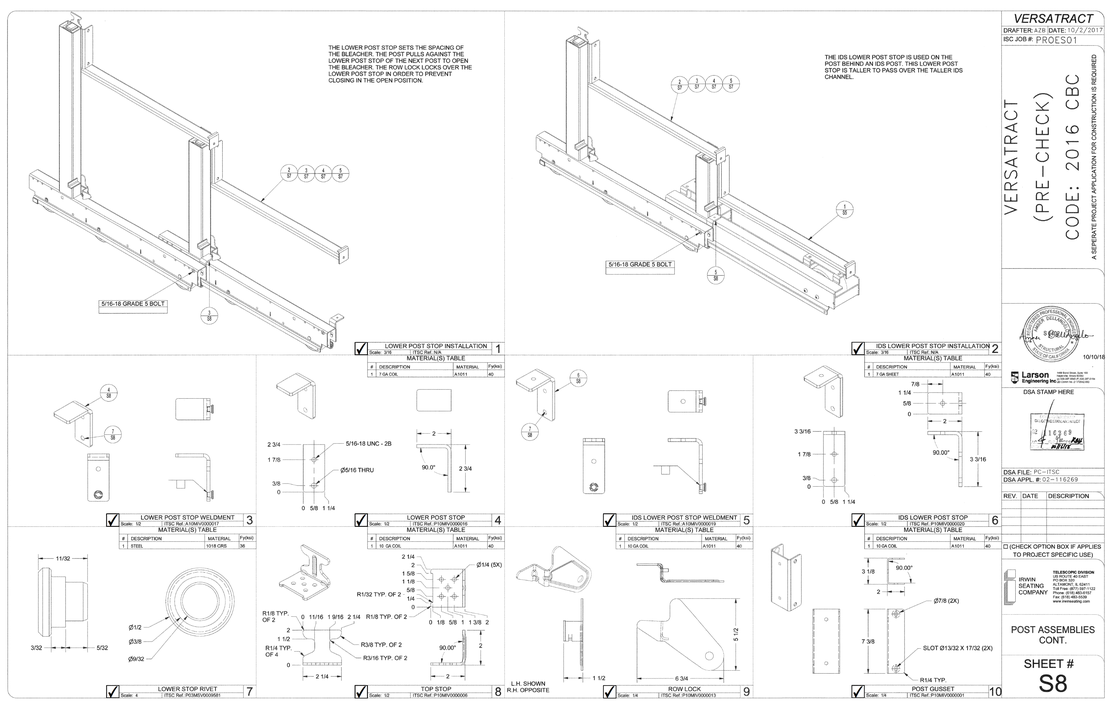

QUATTROCCHI KWOK ARCHITECTS

Main:
636 Fifth Street, Santa Rosa, CA 95404
East Bay:
55 Harrison Street, Suite 525,
Oakland, CA 94607
(707) 576-0829

LICENSED ARCHITECT
JIM THEISS
LICENSE # C22643
EXP JUNE 30, 2021
STATE OF CALIFORNIA

SIGNED: MAY 5, 2021

FREEDOM HIGH SCHOOL

NEW AUXILIARY GYMNASIUM

1050 NEROLY RD,
OAKLEY, CA 94561

LIBERTY UNION HIGH SCHOOL DISTRICT

DSA APP NO. 01-119278

ARCH PROJECT NO: 1869.00

DRAWN BY:

DRAWING SCALE:

PTN: 61721-78 FILE NO: 7-H4

BID DOCUMENT

APRIL 27, 2021

SHEET TITLE

S7: POST ASSEMBLIES
S8: POST ASSEMBLIES CONT.

SHEET NUMBER

B5

BIMcloud: archiserver - BIMcloud Basic for ARCHICAD 22/1869.00 Freedom HS Aux. Gym SD, 22:11/17/2020:1:29 PM

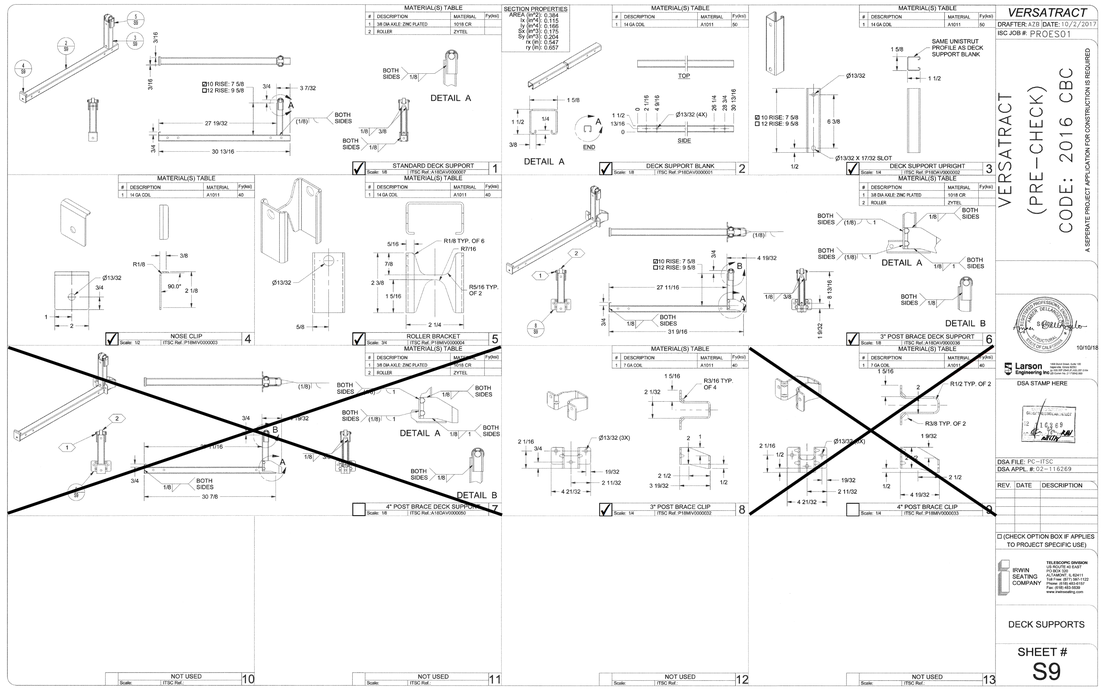

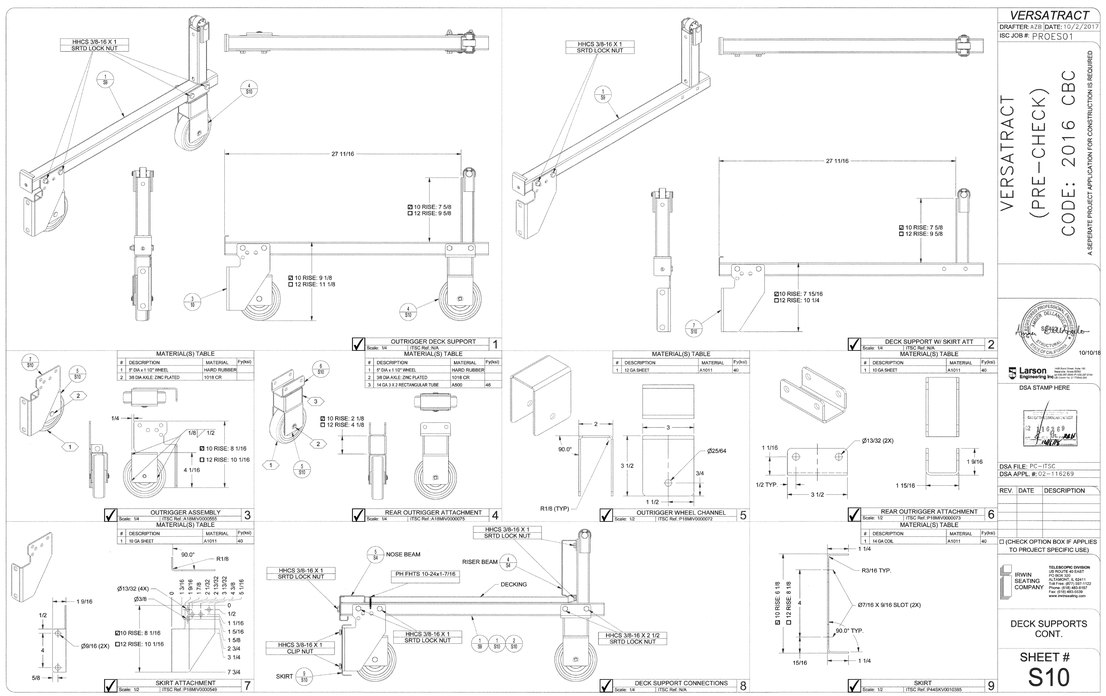

QUATTROCCHI KWOK ARCHITECTS

Main:
636 Fifth Street, Santa Rosa, CA 95404
East Bay:
55 Harrison Street, Suite 525,
Oakland, CA 94607
(707) 576-0829

LICENSED ARCHITECT
JIM THEISS
LICENSE # C22643
EXP JUNE 30, 2021
STATE OF CALIFORNIA

SIGNED: MAY 5, 2021

FREEDOM HIGH SCHOOL

NEW AUXILIARY GYMNASIUM

1050 NEROLY RD,
OAKLEY, CA 94561

LIBERTY UNION HIGH SCHOOL DISTRICT

DSA APP NO. 01-119278

ARCH PROJECT NO: 1869.00

DRAWN BY:

DRAWING SCALE:

PTN: 61721-78 FILE NO: 7-H4

BID DOCUMENT

APRIL 27, 2021

SHEET TITLE

S9: DECK SUPPORTS
S10: DECK SUPPORTS CONT.

SHEET NUMBER

B6

BIMcloud: archiserver - BIMcloud Basic for ARCHICAD 22/1869.00 Freedom HS Aux. Gym SD, 22;11/17/2020;1:29 PM

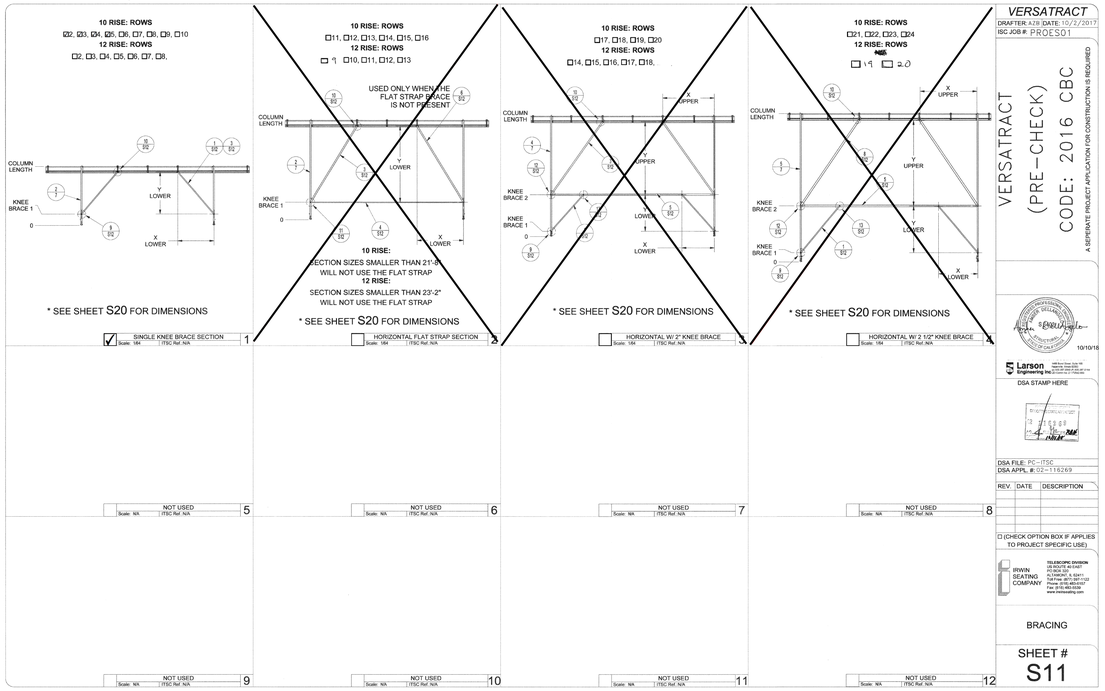

VERSATRACT
DRAFTER: AZB DATE: 10/2/2017
ISC JOB #: PROES01

VERSATRACT
(PRE-CHECK)
CODE: 2016 CBC

A SEPERATE PROJECT APPLICATION FOR CONSTRUCTION IS REQUIRED

10/10/16

Larson Engineering Inc

DSA STAMP HERE

DSA FILE: PC-ITSC
DSA APPL. #: 02-116269

REV.	DATE	DESCRIPTION

☐ (CHECK OPTION BOX IF APPLIES TO PROJECT SPECIFIC USE)

IRWIN SEATING COMPANY
TELESCOPIC DIVISION
135 ROUTE 40 EAST
P.O. BOX 1210
ALTAMONT, IL 62411
Toll Free: (877) 397-1122
Phone: (618) 483-6191
Fax: (618) 483-5539
www.irwinseating.com

BRACING

SHEET #
S11

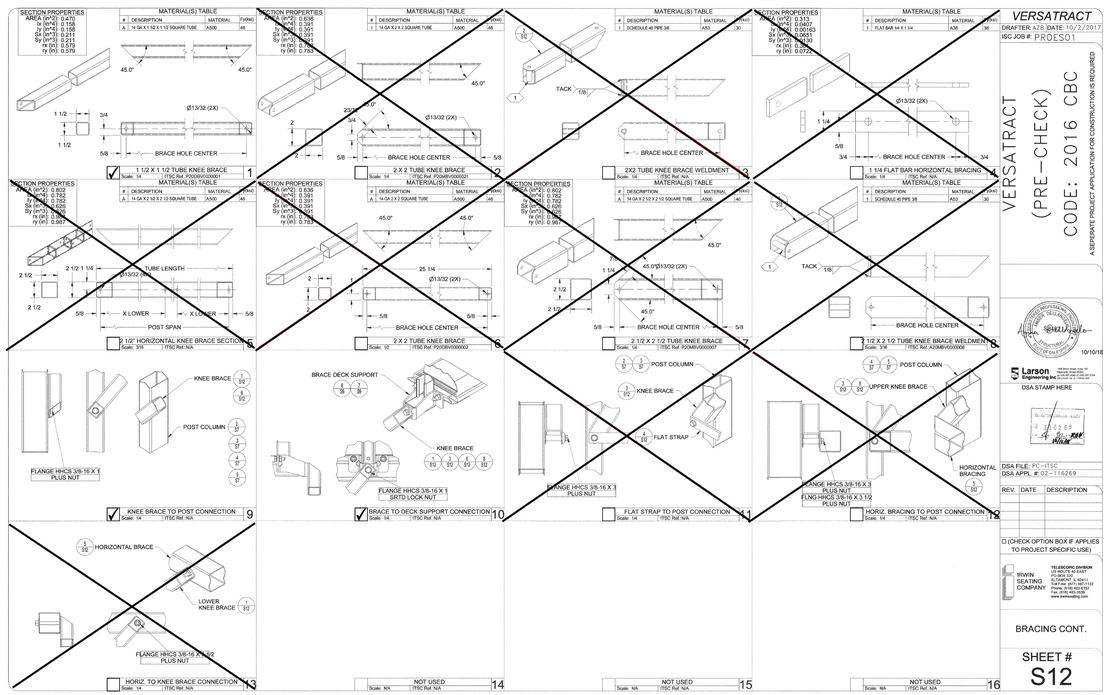

VERSATRACT
DRAFTER: AZB DATE: 10/2/2017
ISC JOB #: PROES01

VERSATRACT
(PRE-CHECK)
CODE: 2016 CBC

A SEPERATE PROJECT APPLICATION FOR CONSTRUCTION IS REQUIRED

10/10/16

Larson Engineering Inc

DSA STAMP HERE

DSA FILE: PC-ITSC
DSA APPL. #: 02-116269

REV.	DATE	DESCRIPTION

☐ (CHECK OPTION BOX IF APPLIES TO PROJECT SPECIFIC USE)

IRWIN SEATING COMPANY
TELESCOPIC DIVISION
135 ROUTE 40 EAST
P.O. BOX 1210
ALTAMONT, IL 62411
Toll Free: (877) 397-1122
Phone: (618) 483-6191
Fax: (618) 483-5539
www.irwinseating.com

BRACING CONT.

SHEET #
S12

QUATTROCCHI KWOK ARCHITECTS
Main:
636 Fifth Street, Santa Rosa, CA 95404
East Bay:
55 Harrison Street, Suite 525,
Oakland, CA 94607
(707) 576-0829

LICENSED ARCHITECT
JIM THEISS
LICENSE # C22643
EXP JUNE 30, 2021
STATE OF CALIFORNIA

SIGNED: MAY 5, 2021

FREEDOM HIGH SCHOOL

NEW AUXILIARY GYMNASIUM

1050 NEROLY RD,
OAKLEY, CA 94561

LIBERTY UNION HIGH SCHOOL DISTRICT

DSA APP NO. 01-119278
ARCH PROJECT NO: 1869.00
DRAWN BY:
DRAWING SCALE:
PTN: 61721-78 FILE NO: 7-H4

BID DOCUMENT

APRIL 27, 2021

SHEET TITLE

S11: BRACING
S12: BRACING CONT.

SHEET NUMBER

B7

BIMcloud: archiserver - BIMcloud Basic for ARCHICAD 22/1869.00 Freedom HS Aux. Gym SD, 22:11/17/2020:1:29 PM

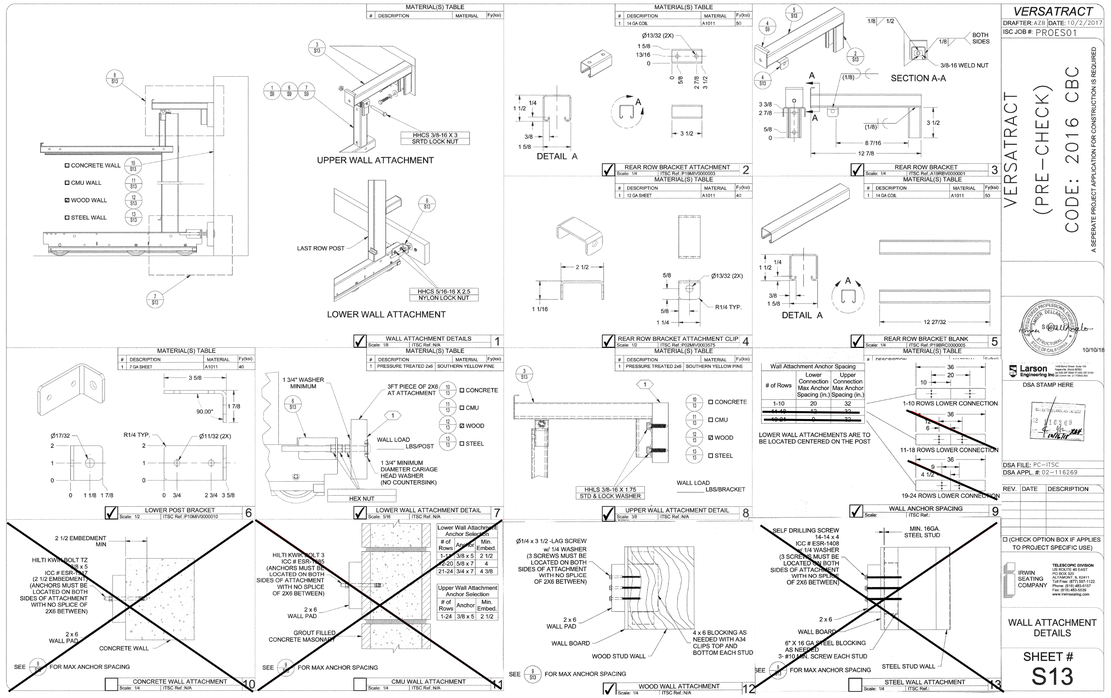

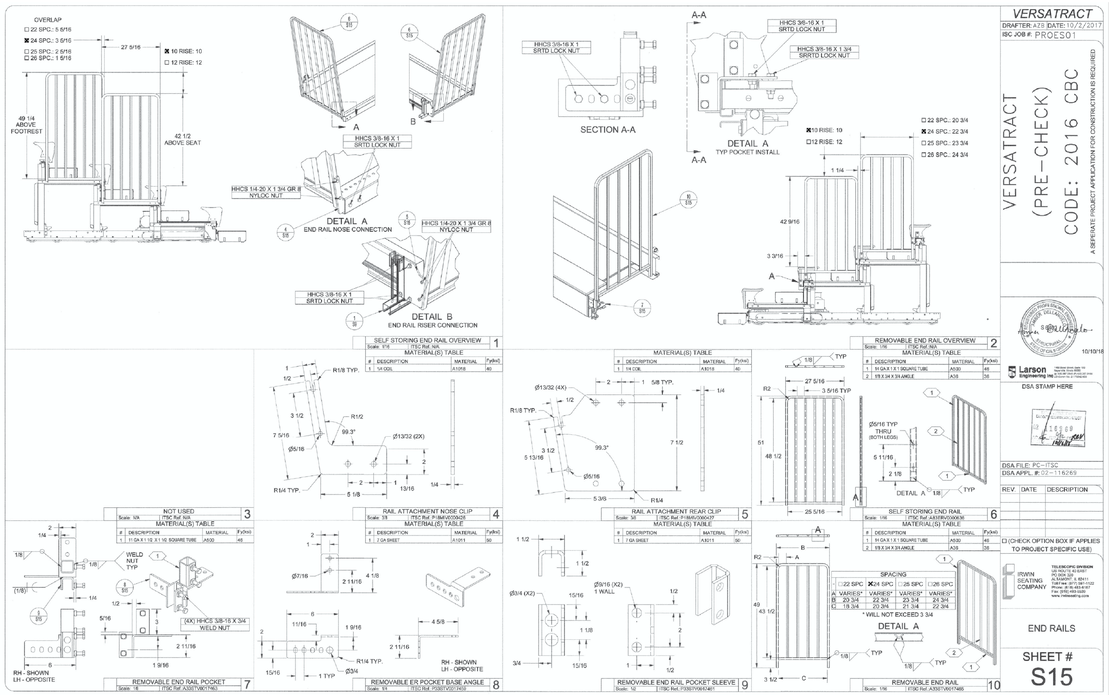

QUATTROCCHI KWOK ARCHITECTS

Main:
636 Fifth Street, Santa Rosa, CA 95404
East Bay:
55 Harrison Street, Suite 525,
Oakland, CA 94607
(707) 576-0829

LICENSED ARCHITECT
JIM THEISS
LICENSE # C22643
EXP JUNE 30, 2021
STATE OF CALIFORNIA

SIGNED: MAY 5, 2021

FREEDOM HIGH SCHOOL

NEW AUXILIARY GYMNASIUM

1050 NEROLY RD,
OAKLEY, CA 94561

LIBERTY UNION HIGH SCHOOL DISTRICT

DSA APP NO. 01-119278

ARCH PROJECT NO: 1869.00

DRAWN BY:

DRAWING SCALE:

PTN: 61721-78 FILE NO: 7-H4

BID DOCUMENT

APRIL 27, 2021

SHEET TITLE

S13: WALL ATTACHMENT DETAILS
S15: END RAILS

SHEET NUMBER

B8

BIMcloud: archiserver - BIMcloud Basic for ARCHICAD 22/1869.00 Freedom HS Aux. Gym SD, 22;11/17/2020;1:29 PM

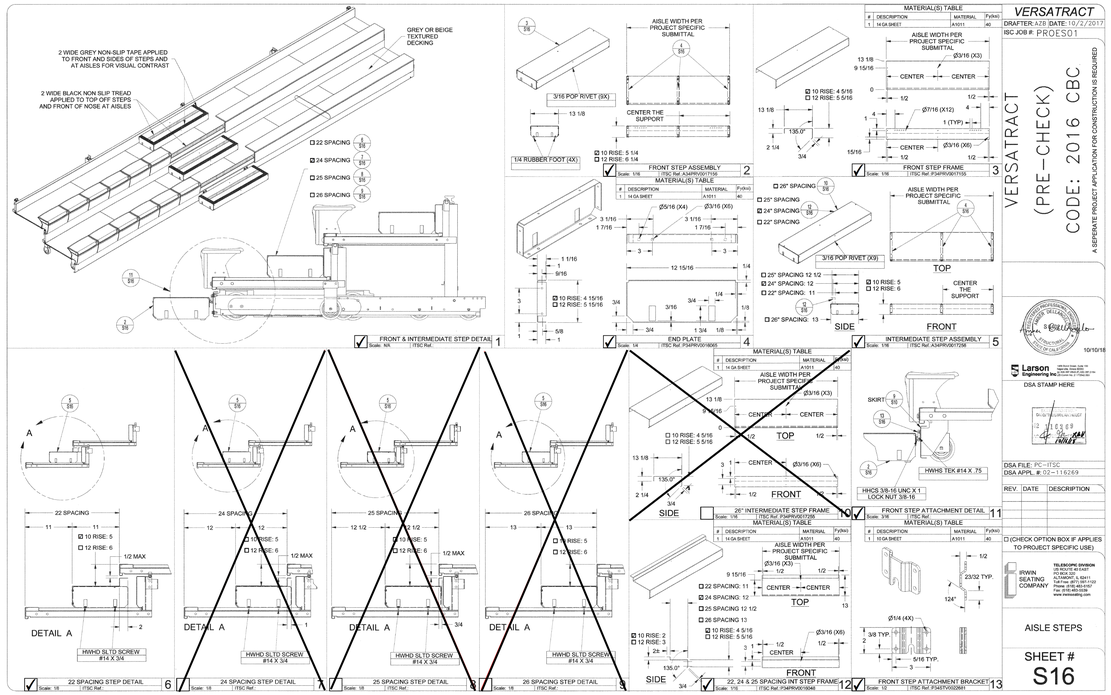

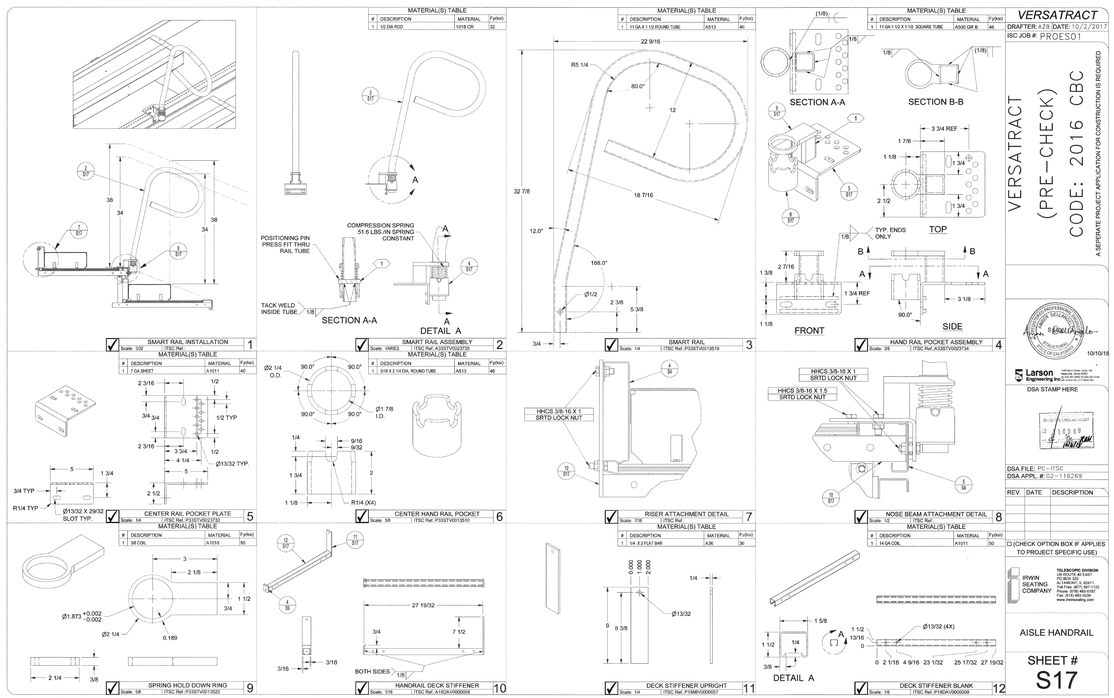

QUATTROCCHI KWOK ARCHITECTS

Main:
636 Fifth Street, Santa Rosa, CA 95404
East Bay:
55 Harrison Street, Suite 525,
Oakland, CA 94607
(707) 576-0829

LICENSED ARCHITECT
JIM THEISS
LICENSE # C22643
EXP JUNE 30, 2021
STATE OF CALIFORNIA

SIGNED: MAY 5, 2021

FREEDOM HIGH SCHOOL

NEW AUXILIARY GYMNASIUM

1050 NEROLY RD,
OAKLEY, CA 94561

LIBERTY UNION HIGH SCHOOL DISTRICT

DSA APP NO. 01-119278

ARCH PROJECT NO: 1869.00
DRAWN BY:
DRAWING SCALE:
PTN: 61721-78 FILE NO: 7-H4

BID DOCUMENT
APRIL 27, 2021

SHEET TITLE

S16: AISLE STEPS
S17: AISLE HAND RAIL

SHEET NUMBER

B9

BIMcloud: archiserver - BIMcloud Basic for ARCHICAD 22/1869.00 Freedom HS Aux. Gym SD 22:11/17/2020:1:29 PM

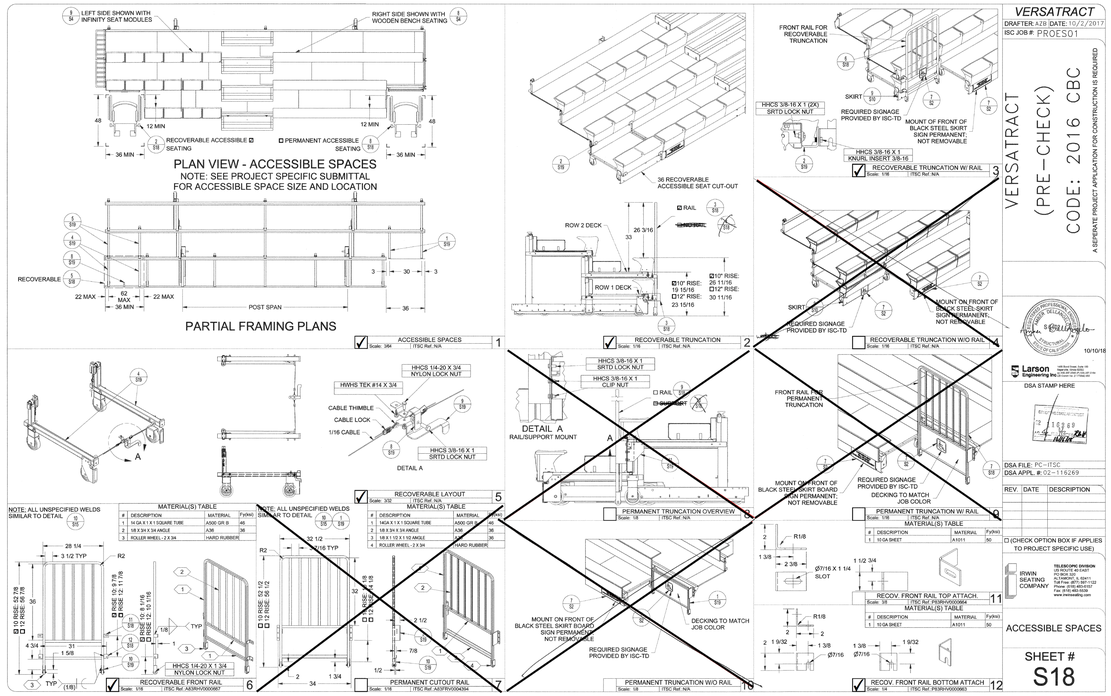

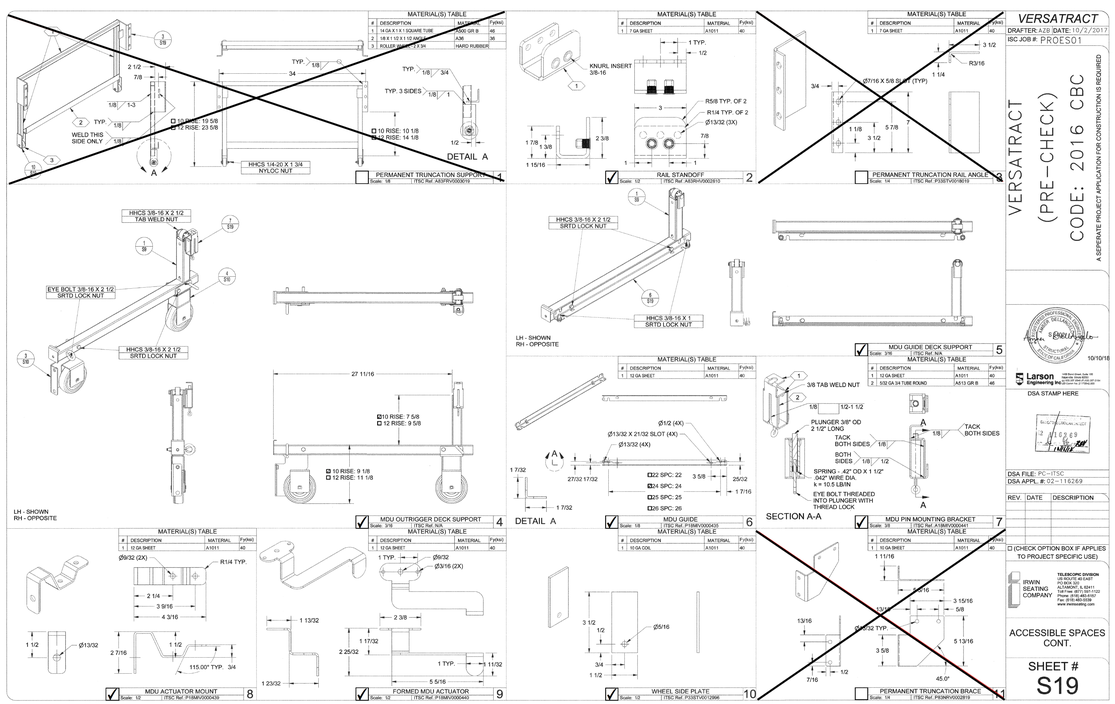

QUATTROCCHI KWOK ARCHITECTS

Main:
636 Fifth Street, Santa Rosa, CA 95404
East Bay:
55 Harrison Street, Suite 525,
Oakland, CA 94607
(707) 576-0829

LICENSED ARCHITECT
JIM THEISS
LICENSE # C22643
EXP JUNE 30, 2021
STATE OF CALIFORNIA

SIGNED: MAY 5, 2021

FREEDOM HIGH SCHOOL

NEW AUXILIARY GYMNASIUM

1050 NEROLY RD,
OAKLEY, CA 94561

LIBERTY UNION HIGH SCHOOL DISTRICT

DSA APP NO. 01-119278

ARCH PROJECT NO: 1869.00

DRAWN BY:

DRAWING SCALE:

PTN: 61721-78 FILE NO: 7-H4

BID DOCUMENT

APRIL 27, 2021

SHEET TITLE

S18: ACCESSIBLE SPACES
S19: ACCESSIBLE SPACES CONT.

SHEET NUMBER

B10

BIMcloud: archiserver - BIMcloud Basic for ARCHICAD 22/1869.00 Freedom HS Aux. Gym SD, 22:11/17/2020:1:29 PM

	SECTION SIZE (FT-IN)	SECTION SIZE (FT-IN)	ROW 1 POST SPAN 10 RISE	ROW 1 POST SPAN 12 RISE	MAX. ROWS 10 RISE	MAX. ROWS 12 RISE
	10'-2"	122	45	45	12	12
	10'-4"	124	47	47	12	12
	10'-6"	126	47	47	12	12
	10'-8"	128	47	47	13	13
	10'-10"	130	49	49	13	13
	11'-0"	132	49	49	13	13
	11'-2"	134	49	49	14	14
	11'-4"	136	51	51	14	14
	11'-6"	138	51	51	14	14
	11'-8"	140	51	51	14	14
	11'-10"	142	53	53	14	14
	12'-0"	144	53	53	15	15
	12'-2"	146	53	53	15	15
	12'-4"	148	55	55	15	15
	12'-6"	150	55	55	16	16
	12'-8"	152	55	55	16	16
	12'-10"	154	57	57	16	16
	13'-0"	156	57	57	16	16
	13'-2"	158	57	57	17	17
	13'-4"	160	59	59	17	17
	13'-6"	162	59	59	17	17
	13'-8"	164	59	59	18	18
	13'-10"	166	61	61	18	18
	14'-0"	168	61	61	18	18
	14'-2"	170	61	61	18	18
	14'-4"	172	63	63	18	18
	14'-6"	174	63	63	19	19
	14'-8"	176	63	63	19	19
	14'-10"	178	65	65	19	19
	15'-0"	180	65	65	20	20
	15'-2"	182	65	65	20	20
	15'-4"	184	67	67	20	20
	15'-6"	186	67	67	20	20
	15'-8"	188	67	67	21	20
	15'-10"	190	69	69	21	20
	16'-0"	192	69	69	21	20
	16'-2"	194	69	69	22	20
	16'-4"	196	71	71	22	20
	16'-6"	198	71	71	22	20
	16'-8"	200	71	71	22	20
	16'-10"	202	73	73	22	20
	17'-0"	204	73	73	23	20
	17'-2"	206	73	73	23	20
	17'-4"	208	75	75	23	20
	17'-6"	210	75	75	24	20
	17'-8"	212	75	75	24	20
	17'-10"	214	77	77	24	20
	18'-0"	216	77	77	24	20
	18'-2"	218	79	79	24	20
	18'-4"	220	81	81	24	20
	18'-6"	222	83	83	24	20
	18'-8"	224	85	85	24	20
	18'-10"	226	87	87	24	20
	19'-0"	228	89	89	24	20
	19'-2"	230	91	91	24	20
	19'-4"	232	93	93	24	20
X	19'-6"	234	95	95	24	20
	19'-8"	236	97	97	24	20
	19'-10"	238	99	99	24	20
	20'-0"	240	101	101	24	20
	20'-2"	242	103	103	24	20
	20'-4"	244	105	105	24	20
	20'-6"	246	107	107	24	20
	20'-8"	248	109	109	24	20
	20'-10"	250	111	111	24	20
	21'-0"	252	113	113	24	20
	21'-2"	254	115	115	24	20
	21'-4"	256	117	117	24	20
	21'-6"	258	119	119	24	20
	21'-8"	260	121	121	24	20
	21'-10"	262	123	123	24	20
	22'-0"	264	125	125	24	20
	22'-2"	266	127	127	24	20
	22'-4"	268	129	129	24	20
	22'-6"	270	131	131	24	20
	22'-8"	272	133	133	24	20
	22'-10"	274	135	135	24	20
	23'-0"	276	137	137	24	20
	23'-2"	278	139	139	24	20
	23'-4"	280	141	141	24	20
	23'-6"	282	143	143	24	20
	23'-8"	284	145	145	24	20
	23'-10"	286	147	147	24	20
	24'-0"	288	149	149	24	20
	24'-2"	290	151	151	24	20
	24'-4"	292	153	153	24	20
	24'-6"	294	155	155	24	20
	24'-8"	296	157	157	24	20
	24'-10"	298	159	159	24	20
X	25'-0"	300	157	161	23	20
	25'-2"	302	159	163	23	20
	25'-4"	304	[illegible]	165	23	20
	25'-6"	306	157	167	23	20

SECTION SIZES — Scale: — ITSC Ref.: — 1

ROW	MAX. POST SPAN	POST TYPE SEE SHEET S7	COLUMN LENGTH	COLUMN SIZE	L/R OF COLUMN	CANTILEVER HEIGHT	DECK HEIGHT	KNEE BRACE 1	KNEE BRACE 1 W/ STRAP BRACE	KNEE BRACE 2 W/ HORZ. BRACE	MAX. LOWER KNEE BRACE DIMENSIONS X	Y	HOLE TO HOLE	BRACE TYPE SEE SHEET S12	MAX. UPPER KNEE BRACE DIMENSIONS X	Y	HOLE TO HOLE	BRACE TYPE SEE SHEET S12	MAX. STRAP BRACE DIMENSIONS SPAN	STRAP LENGTH	BRACE TYPE SEE SHEET S12	MAX. HORIZ. BRACING DIM… SPAN	TUBE LENGTH	DIM "A"
1	159	DETAIL 2	11.3125	3 X 2	10.03	3.8125	9.9375	N/A	N/A	N/A	0	0	0	0	N/A	N/A	N/A	N/A	N/A	N/A	N/A	N/A	N/A	N/A
2	164	DETAIL 2	21.3125	3 X 2	18.89	13.8125	19.9375	2.00	N/A	N/A	38.00	11.0625	39.578	DETAIL 1	N/A	N/A	N/A	N/A	N/A	N/A	N/A	N/A	N/A	N/A
3	169	DETAIL 2	31.3125	3 X 2	27.76	23.8125	29.9375	3.50	N/A	N/A	40.50	19.5625	44.977	DETAIL 1	N/A	N/A	N/A	N/A	N/A	N/A	N/A	N/A	N/A	N/A
4	174	DETAIL 2	41.3125	3 X 2	36.62	33.8125	39.9375	5.00	N/A	N/A	43.00	28.0625	51.347	DETAIL 1	N/A	N/A	N/A	N/A	N/A	N/A	N/A	N/A	N/A	N/A
5	179	DETAIL 2	51.3125	3 X 2	45.49	43.8125	49.9375	6.50	N/A	N/A	45.50	36.5625	58.370	DETAIL 1	N/A	N/A	N/A	N/A	N/A	N/A	N/A	N/A	N/A	N/A
6	184	DETAIL 2	61.3125	3 X 2	54.35	53.8125	59.9375	8.00	N/A	N/A	48.00	45.0625	65.838	DETAIL 1	N/A	N/A	N/A	N/A	N/A	N/A	N/A	N/A	N/A	N/A
7	189	DETAIL 2	71.3125	3 X 2	63.21	63.8125	69.9375	9.50	N/A	N/A	50.50	53.5625	73.615	DETAIL 1	N/A	N/A	N/A	N/A	N/A	N/A	N/A	N/A	N/A	N/A
8	194	DETAIL 2	81.3125	3 X 2	72.08	73.8125	79.9375	11.00	N/A	N/A	53.00	62.0625	81.613	DETAIL 1	N/A	N/A	N/A	N/A	N/A	N/A	N/A	N/A	N/A	N/A
9	199	DETAIL 2	91.3125	3 X 2	80.94	83.8125	89.9375	12.50	N/A	N/A	55.50	70.5625	89.774	DETAIL 1	N/A	N/A	N/A	N/A	N/A	N/A	N/A	N/A	N/A	N/A
10	204	DETAIL 2	101.3125	3 X 2	89.81	93.8125	99.9375	14.00	N/A	N/A	58.00	79.0625	98.055	DETAIL 1	N/A	N/A	N/A	N/A	N/A	N/A	N/A	N/A	N/A	N/A
11	209	DETAIL 2	111.3125	3 X 2	98.67	103.8125	109.9375	N/A	15.50	N/A	N/A	N/A	N/A	N/A	60.50	87.5625	106.430	DETAIL 3	209	210.25	DETAIL 4	N/A	N/A	N/A
12	214	DETAIL 2	121.3125	3 X 2	107.54	113.8125	119.9375	N/A	17.00	N/A	N/A	N/A	N/A	N/A	63.00	96.0625	114.878	DETAIL 3	214	215.25	DETAIL 4	N/A	N/A	N/A
13	219	DETAIL 2	131.3125	3 X 2	116.40	123.8125	129.9375	N/A	18.50	N/A	N/A	N/A	N/A	N/A	65.50	104.5625	123.384	DETAIL 3	219	220.25	DETAIL 4	N/A	N/A	N/A
14	224	DETAIL 2	141.3125	3 X 2	125.27	133.8125	139.9375	N/A	20.00	N/A	N/A	N/A	N/A	N/A	68.00	113.0625	131.936	DETAIL 3	224	225.25	DETAIL 4	N/A	N/A	N/A
15	229	DETAIL 3	151.3125	4 X 2	103.92	143.8125	149.9375	N/A	21.50	N/A	N/A	N/A	N/A	N/A	70.50	121.5625	140.526	DETAIL 3	229	230.25	DETAIL 4	N/A	N/A	N/A
16	234	DETAIL 3	161.3125	4 X 2	110.78	153.8125	159.9375	N/A	23.00	N/A	N/A	N/A	N/A	N/A	73.00	130.0625	149.148	DETAIL 3	234	235.25	DETAIL 4	N/A	N/A	N/A
17	239	DETAIL 4	171.3125	4 X 2	117.65	163.8125	169.9375	2.00	N/A	55	50.00	53.0000	72.863	DETAIL 1	75.50	108.0625	131.825	DETAIL 3	N/A	N/A	N/A	239	240 1/4	50
18	244	DETAIL 4	181.3125	4 X 2	124.52	173.8125	179.9375	3.50	N/A	60	50.00	56.5000	75.447	DETAIL 1	78.00	113.0625	137.358	DETAIL 3	N/A	N/A	N/A	244	245 1/4	50
19	249	DETAIL 4	191.3125	4 X 2	131.39	183.8125	189.9375	5.00	N/A	65	50.00	60.0000	78.102	DETAIL 1	80.50	118.0625	[illegible]	DETAIL 3	N/A	N/A	N/A	249	250 1/4	50
20	254	DETAIL 4	201.3125	4 X 2	138.25	193.8125	199.9375	6.50	N/A	70	50.00	63.5000	80.822	DETAIL 1	83.00	123.0625	148.436	DETAIL 3	N/A	N/A	N/A	254	255 1/4	50
21	259	DETAIL 5	211.3125	4 X 2	145.12	203.8125	209.9375	8.00	N/A	75	50.00	67.0000	83.600	DETAIL 1	85.50	128.0625	153.981	DETAIL 9	N/A	N/A	N/A	259	260 1/4	50
22	264	DETAIL 5	221.3125	4 X 2	151.99	213.8125	219.9375	9.50	N/A	80	50.00	70.5000	86.431	DETAIL 1	88.00	133.0625	159.529	DETAIL 9	N/A	N/A	N/A	264	265 1/4	50
23	269	DETAIL 5	231.3125	4 X 2	158.86	223.8125	229.9375	11.00	N/A	85	50.00	74.0000	89.308	DETAIL 1	90.50	138.0625	165.080	DETAIL 9	N/A	N/A	N/A	269	270 1/4	50
24	274	DETAIL 5	241.3125	4 X 2	165.73	233.8125	239.9375	12.50	N/A	90	50.00	77.5000	92.229	DETAIL 1	93.00	143.0625	170.634	DETAIL 9	N/A	N/A	N/A	274	275 1/4	50
25							249.9375																	

NOTE: 260" AND HIGHER SECTIONS ONLY, WILL HAVE THE STRAP BRACE SECTION WITH OUT THE STRAP WILL USE BRACE ON DETAIL 6 SHEET S12

10 RISE DIMENSIONS — Scale: — ITSC Ref.: — 2

ROW	MAX. POST SPAN	POST TYPE SEE SHEET S?	COLUMN LENGTH	COLUMN SIZE	L/R OF COLUMN	CANTILEVER HEIGHT	DECK HEIGHT	KNEE BRACE 1	KNEE BRACE 1 W/ STRAP BRACE	KNEE BRACE 2 W/ HORZ. BRACE	MAX. LOWER KNEE BRACE DIMENSIONS X	Y	HOLE TO HOLE	BRACE TYPE SEE SHEET S12	MAX. UPPER KNEE BRACE DIMENSIONS X	Y	HOLE TO HOLE	BRACE TYPE SEE SHEET S12	MAX. STRAP BRACE DIMENSIONS SPAN	STRAP LENGTH	BRACE TYPE SEE SHEET S12	MAX. HORIZ. BRACING DIMENSIONS SPAN	TUBE LENGTH	DIM "A"	BRACE TYPE SEE SHEET S12
1	167	DETAIL 2	15.3125	3 X 2	13.57	5.8125	11.9375	N/A	N/A	N/A	0	0	0	0	N/A	N/A	N/A	N/A	N/A	N/A	N/A	N/A	N/A	N/A	N/A
2	172	DETAIL 2	27.3125	3 X 2	24.21	17.8125	23.9375	2.00	N/A	N/A	40.00	15.0625	42.742	DETAIL 1	N/A	N/A	N/A	N/A	N/A	N/A	N/A	N/A	N/A	N/A	N/A
3	177	DETAIL 2	39.3125	3 X 2	34.85	29.8125	35.9375	3.50	N/A	N/A	42.50	25.5625	49.595	DETAIL 1	N/A	N/A	N/A	N/A	N/A	N/A	N/A	N/A	N/A	N/A	N/A
4	182	DETAIL 2	51.3125	3 X 2	45.49	41.8125	47.9375	5.00	N/A	N/A	45.00	36.0625	57.667	DETAIL 1	N/A	N/A	N/A	N/A	N/A	N/A	N/A	N/A	N/A	N/A	N/A
5	187	DETAIL 2	63.3125	3 X 2	56.12	53.8125	59.9375	6.50	N/A	N/A	47.50	46.5625	66.516	DETAIL 1	N/A	N/A	N/A	N/A	N/A	N/A	N/A	N/A	N/A	N/A	N/A
6	192	DETAIL 2	75.3125	3 X 2	66.76	65.8125	71.9375	8.00	N/A	N/A	50.00	57.0625	75.869	DETAIL 1	N/A	N/A	N/A	N/A	N/A	N/A	N/A	N/A	N/A	N/A	N/A
7	197	DETAIL 2	87.3125	3 X 2	77.40	77.8125	83.9375	9.50	N/A	N/A	52.50	67.5625	85.363	DETAIL 1	N/A	N/A	N/A	N/A	N/A	N/A	N/A	N/A	N/A	N/A	N/A
8	202	DETAIL 2	99.3125	3 X 2	88.04	89.8125	95.9375	11.00	N/A	N/A	55.00	78.0625	95.492	DETAIL 1	N/A	N/A	N/A	N/A	N/A	N/A	N/A	N/A	N/A	N/A	N/A
9	207	DETAIL 2	111.3125	3 X 2	98.67	101.8125	107.9375	12.50	N/A	N/A	57.50	88.5625	105.592	DETAIL 6	N/A	N/A	N/A	N/A	N/A	N/A	N/A	N/A	N/A	N/A	N/A
10	212	DETAIL 2	123.3125	3 X 2	109.31	113.8125	119.9375	N/A	14	N/A	N/A	N/A	N/A	N/A	60	99.0625	115.81614	DETAIL 3	212	213.25	DETAIL 4	N/A	N/A	N/A	N/A
11	217	DETAIL 2	135.3125	3 X 2	119.95	125.8125	131.9375	N/A	15.50	N/A	N/A	N/A	N/A	N/A	62.50	109.5625	126.136	DETAIL 3	217	218.25	DETAIL 4	N/A	N/A	N/A	N/A
12	222	DETAIL 2	147.3125	3 X 2	130.58	137.8125	143.9375	N/A	17.00	N/A	N/A	N/A	N/A	N/A	65.00	120.0625	136.528	DETAIL 3	222	223.25	DETAIL 4	N/A	N/A	N/A	N/A
13	227	DETAIL 3	159.3125	4 X 2	109.41	149.8125	155.9375	N/A	18.50	N/A	N/A	N/A	N/A	N/A	67.50	130.5625	146.979	DETAIL 3	227	228.25	DETAIL 4	N/A	N/A	N/A	N/A
14	232	DETAIL 4	171.3125	4 X 2	117.65	161.8125	167.9375	2.00	N/A	60	50.00	58.00	76.58	DETAIL 1	70.00	101.0625	122.938	DETAIL 3	N/A	N/A	N/A	232	233.25	50	DETAIL 5
15	237	DETAIL 4	183.3125	4 X 2	125.89	173.8125	179.9375	3.50	N/A	65	50.00	61.50	79.26	DETAIL 1	72.50	108.0625	130.130	DETAIL 3	N/A	N/A	N/A	237	238.25	50	DETAIL 5
16	242	DETAIL 4	195.3125	4 X 2	134.13	185.8125	191.9375	5.00	N/A	70	50.00	65.00	82.01	DETAIL 1	75.00	115.0625	137.348	DETAIL 3	N/A	N/A	N/A	242	243.25	50	DETAIL 5
17	247	DETAIL 4	207.3125	4 X 2	142.38	197.8125	203.9375	6.50	N/A	75	50.00	68.5000	84.807	DETAIL 1	77.50	122.0625	144.587	DETAIL 3	N/A	N/A	N/A	247	248 1/4	50	DETAIL 5
18	252	DETAIL 4	219.3125	4 X 2	150.62	209.8125	215.9375	8.00	N/A	80	50.00	72.0000	87.658	DETAIL 1	80.00	129.0625	151.846	DETAIL 3	N/A	N/A	N/A	252	253 1/4	50	DETAIL 5
19	257	DETAIL 5	231.3125	4 X 2	158.86	221.8125	227.9375	9.50	N/A	85	50.00	75.5000	90.555	DETAIL 1	82.50	136.0625	159.120	DETAIL 3	N/A	N/A	N/A	257	258 1/4	50	DETAIL 5
20	262	DETAIL 5	243.3125	4 X 2	167.10	233.8125	239.9375	11.00	N/A	90	50.00	79.0000	93.493	DETAIL 1	85.00	143.0625	166.409	DETAIL 3	N/A	N/A	N/A	262	263 1/4	50	DETAIL 5
21							251.9375																		

NOTE: 280" AND HIGHER SECTIONS ONLY, WILL HAVE THE STRAP BRACE SECTION WITH OUT THE STRAP WILL USE BRACE ON DETAIL 6 SHEET S12

12 RISE DIMENSIONS — Scale: — ITSC Ref.: — 3

VERSATRACT

DRAFTER: AZB DATE: 10/1/2017

ISC JOB #: PROES01

VERSATRACT
(PRE-CHECK)
CODE: 2016 CBC

A SEPERATE PROJECT APPLICATION FOR CONSTRUCTION IS REQUIRED

REGISTERED PROFESSIONAL ENGINEER — AMBER DELLANGELO — S6402 — STRUCTURAL — STATE OF CALIFORNIA

10/10/1

Larson Engineering Inc

DSA STAMP HERE

DIV. OF THE STATE ARCHITECT — 02 116269

DSA FILE: PC-ITSC
DSA APPL. #: 02-116269
PC NUMBER:

REV.	DATE	DESCRIPTION

☐ (CHECK OPTION BOX IF APPLIES TO PROJECT SPECIFIC USE)

IRWIN SEATING COMPANY
TELESCOPIC DIVISION
US ROUTE 40 EAST
PO BOX 320
ALTAMONT, IL 62411
Toll Free: (877) 597-1122
Phone: (618) 483-6157
Fax: (618) 483-5539
www.irwinseating.com

DIMENSIONS

SHEET #
S20

QUATTROCCHI KWOK ARCHITECTS

Main:
636 Fifth Street, Santa Rosa, CA 95404
East Bay:
55 Harrison Street, Suite 525,
Oakland, CA 94607
(707) 576-0829

LICENSED ARCHITECT — JIM THEISS — LICENSE # C22643 — EXP JUNE 30, 2021 — STATE OF CALIFORNIA

SIGNED: MAY 5, 2021

FREEDOM HIGH SCHOOL

NEW AUXILIARY GYMNASIUM

1050 NEROLY RD,
OAKLEY, CA 94561

LIBERTY UNION
HIGH SCHOOL
DISTRICT

DSA APP NO. 01-119278

ARCH PROJECT NO: 1869.00
DRAWN BY:
DRAWING SCALE:
PTN: 61721-78 FILE NO: 7-H4

BID DOCUMENT

APRIL 27, 2021

SHEET TITLE

S20: DIMENSIONS

SHEET NUMBER

B11

BIMcloud: archiserver - BIMcloud Basic for ARCHICAD 22/1869.00 Freedom HS Aux. Gym SD_22;11/17/2020;1:29 PM

Project Name:	Freedom High School Auxiliary Gym	NRCC-PRF-01-E	Page 1 of 15
Project Address:	1050 Neroly Road Oakley 94561	Calculation Date/Time:	12:27, Tue, Dec 22, 2020
Input File Name:	Freedom High Auxiliary Gym.cibd19x		

A. GENERAL INFORMATION

1.	Project Location (city)	Oakley	8.	Standards Version	Compliance2019
2.	CA Zip Code	94561	9.	Compliance Software (version)	EnergyPro 8.2
3.	Climate Zone	12	10.	Weather File	CONCORD_724936_CZ2010.epw
4.	Total Conditioned Floor Area in Scope	9,848 ft²	11.	Building Orientation (deg)	(N) 0 deg
5.	Total Unconditioned Floor Area	0 ft²	12.	Permitted Scope of Work	NewEnvelopeAndMechanical
6.	Total # of Stories (Habitable Above Grade)	1	13	Building Type(s)	Nonresidential
7.	Total # of dwelling units	0	14	Gas Type	NaturalGas

B. PROJECT SUMMARY

Table Instructions: Table B shows which building components are included in the performance calculation. If indicated as not included, the project must show compliance prescriptively if within permit application.

Building Components Complying via Performance				Building Components Complying Prescriptively	
Envelope (see Table G)	☒ Performance	Covered Process: Commercial Kitchens	☐ Performance	*The following building components are ONLY eligible for prescriptive compliance and should be documented on the NRCC form listed if within the scope of the permit application (i.e. compliance will not be shown on the NRCC-PRF-E).*	
	☐ Not Included		☒ Not Included		
Mechanical (see Table H)	☒ Performance	Covered Process: Computer Rooms	☐ Performance	Indoor Lighting (Unconditioned)§140.6	*NRCC-LTI-E*
	☐ Not Included		☒ Not Included	Outdoor Lighting §140.7	*NRCC-LTO-E*
Domestic Hot Water (see Table I)	☒ Performance	Covered Process: Laboratory Exhaust	☐ Performance	Sign Lighting §140.8	*NRCC -LTS-E*
	☐ Not Included		☒ Not Included	Mandatory Measures	
Lighting (Indoor Conditioned, see Table K)	☐ Performance			*Electrical power systems, commissioning, solar ready, elevator and escalator requirements are mandatory and should on the NRCC form listed if applicable (i.e. compliance will not be shown on the NRCC-PRF-E.)*	
	☒ Not Included			Electrical Power Distribution $110.11	*NRCC-ELC-E is required*
Solar Thermal Water Heating (see Table I)	☐ Performance			Commissioning $120.8	*NRCC-CXR-E is required*
	☒ Not Included			Solar Ready $110.10	*NRCC-SRA-E is required*

Project Name:	Freedom High School Auxiliary Gym	NRCC-PRF-01-E	Page 2 of 15
Project Address:	1050 Neroly Road Oakley 94561	Calculation Date/Time:	12:27, Tue, Dec 22, 2020
Input File Name:	Freedom High Auxiliary Gym.cibd19x		

C1. COMPLIANCE RESULTS FOR PERFORMANCE COMPONENTS (Annual TDV Energy Use, kBtu/ft ²-yr)

COMPLIES

Energy Component	Standard Design (TDV)	Proposed Design (TDV)	Compliance Margin (TDV)[1]
Space Heating	16.01	4.26	11.75
Space Cooling	87.91	76.85	11.06
Indoor Fans	97.58	88.87	8.71
Heat Rejection	--	--	--
Pumps & Misc.	--	--	--
Domestic Hot Water	7.58	10.68	-3.10
Indoor Lighting	71.79	71.79	--
ENERGY STANDARDS COMPLIANCE TOTAL	**280.87**	**252.45**	**28.42 (10.1%)**

[1] *Notes: The number in parenthesis following the Compliance Margin in column 4. represents the Percent Better than Standard.*

C2. RESULTS FOR 'ABOVE CODE' QUALIFICATIONS[1]

☐ This project is pursuing CalGreen Tier 1 ☐ This project is pursuing CalGreen Tier 2

Miscellaneous Energy Component	Standard Design (TDV)	Proposed Design (TDV)	Compliance Margin (TDV)[1]
Receptacle	100.59	100.59	--
Process	--	--	--
Other Ltg	--	--	--
Process Motors	--	--	--
COMPLIANCE TOTAL PLUS MISCELLANEOUS COMPONENTS	**381.46**	**353.04**	**28.4 (7.5%)**

[1] *Notes: This table is used to document compliance with programs OTHER THAN Title 24 Part 6, if applicable.*

Project Name:	Freedom High School Auxiliary Gym	NRCC-PRF-01-E	Page 3 of 15
Project Address:	1050 Neroly Road Oakley 94561	Calculation Date/Time:	12:27, Tue, Dec 22, 2020
Input File Name:	Freedom High Auxiliary Gym.cibd19x		

C3. ENERGY USE SUMMARY

Energy Component	Standard Design Site (MWh)	Proposed Design Site (MWh)	Margin (MWh)	Standard Design Site (MBtu)	Proposed Design Site (MBtu)	Margin (MBtu)
Space Heating	--	0.0	--	79.1	20.1	59.0
Space Cooling	14.9	13.5	1.4	--	--	--
Indoor Fans	27.8	29.8	-2.0	--	--	--
Heat Rejection	--	--	--	--	--	--
Pumps & Misc.	--	--	--	--	--	--
Domestic Hot Water	1.6	4.1	-2.5	19.2	--	--
Indoor Lighting	23.9	23.9	0.0	--	--	--
Compliance Total	**68.2**	**71.3**	**-3.1**	**98.3**	**20.1**	**78.2**
Receptacle	33.6	33.6	0.0	--	--	--
Process	--	--	--	--	--	--
Other Ltg	--	--	--	--	--	--
Process Motors	--	--	--	--	--	--
TOTAL	**101.8**	**104.9**	**-3.1**	**98.3**	**20.1**	**78.2**

C4. UNMET LOAD HOURS

This Section Does Not Apply

D. EXCEPTIONAL CONDITIONS

This project includes partial performance compliance scope options. The building must show compliance with all other applicable compliance scope options (performance or prescriptively) before occupying.

The aged solar reflectance and aged thermal emittance must be listed in the Cool Roof Rating Council database of certified products. For projects where initial reflectance is used, the initial reflectance must be listed, and the aged reflectance is calculated by the software program and used in the compliance model.

This project uses the Simplified Geometry Performance Modeling Approach which is not capable of modeling daylighting controls and assumes the prescriptive Secondary Daylit Control requirements are met. PRESCRIPTIVE COMPLIANCE documentation (form NRCC-LTI-02-E) for the requirements of section 140.6(d) Automatic Daylighting Controls in Secondary Daylit Zones is required.

The user model includes space(s) that are designed to be served by mechanical cooling systems, but the cooling systems were not included in the simulation model. A cooling system has been modeled for both the proposed and standard cases.

The user model includes space(s) without sufficient cooling equipment. Cooling equipment has been added to the model to meet cooling loads.

Project Name:	Freedom High School Auxiliary Gym	NRCC-PRF-01-E	Page 4 of 15
Project Address:	1050 Neroly Road Oakley 94561	Calculation Date/Time:	12:27, Tue, Dec 22, 2020
Input File Name:	Freedom High Auxiliary Gym.cibd19x		

E. HERS VERIFICATION

This Section Does Not Apply

F. ADDITIONAL REMARKS

This Section Does Not Apply

G1. ENVELOPE GENERAL INFORMATION (conditioned spaces only)

1	2	3	4
Opaque Surfaces & Orientation	**Total Gross Surface Area (ft²)**	**Total Fenestration Area (ft²)**	**Window to Wall Ratio (%)**
North-Facing[1]	3,856 ft²	32 ft²	00.8%
East-Facing[2]	2,081 ft²	90 ft²	04.3%
South-Facing[3]	3,856 ft²	116 ft²	03.0%
West-Facing[4]	2,080 ft²	84 ft²	04.0%
Total	**11,873 ft²**	**322 ft²**	**02.7%**
Roof	10,448 ft²	16 ft²	00.2%

Notes:
[1] North-Facing is oriented to within 45 degrees of true north, including 45°00'00" east of north (NE), but excluding 45°00'00" west of north (NW).
[2] East-Facing is oriented to within 45 degrees of true east, including 45°00'00" south of east (SE), but excluding 45°00'00" north of east (NE).
[3] South-Facing is oriented to within 45 degrees of true south, including 45°00'00" west of south (SW), but excluding 45°00'00" east of south (SE).
[4] West-Facing is oriented to within 45 degrees of true west, including 45°00'00" north of due west (NW), but excluding 45°00'00" south of west (SW).

G2. CRRC ROOFING PRODUCT SUMMARY

1	2	3	4	5
Assembly Name	**Roof Pitch**	**Aged Solar Reflectance**	**Thermal Emittance**	**SRI**
BUR Roof rigid insulation35	Low-Slope	0.63	0.75	Not Provided

Project Name:	Freedom High School Auxiliary Gym	NRCC-PRF-01-E	Page 5 of 15
Project Address:	1050 Neroly Road Oakley 94561	Calculation Date/Time:	12:27, Tue, Dec 22, 2020
Input File Name:	Freedom High Auxiliary Gym.cibd19x		

G3. OPAQUE SURFACE ASSEMBLY SUMMARY

1	2	3	4	5	6	7	8	9
Surface Name	**Surface Type**	**Area (ft²)**	**Framing Type**	**Cavity R-Value**	**Continuous R-Value**	**U-Factor / F-Factor / C-Factor**	**Status[1]**	**Description of Assembly Layers**
R-19 Wall gym8	ExteriorWall	9274	Wood	19	NA	U-Factor: 0.060	N	Stucco - 7/8 in. Plywood - 5/8 in. Wood framed wall, 24in. OC, 7.25in., R-19 Gypsum Board - 5/8 in.
Gymnasium Metal Roof17	Roof	7800	NA	0	34	U-Factor: 0.027	N	Metal Standing Seam - 1/16 in. Fiberboard sheathing - 1/2 in. Compliance Insulation R34.00 Gypsum Board - 5/8 in. Metal Deck - 1/16 in.
Slab On Grade22	UndergroundFloor	9848	NA	0	NA	F-Factor: 0.730	N	Slab Type = UnheatedSlabOnGrade Insulation Orientation = None Insulation R-Value = R0
R-19 Wall26	ExteriorWall	2599	Wood	19	NA	U-Factor: 0.067	N	Stucco - 7/8 in. Plywood - 5/8 in. Wood framed wall, 16in. OC, 5.5in., R-19 Gypsum Board - 5/8 in.
BUR Roof rigid insulation35	Roof	2648	NA	0	24	U-Factor: 0.037	N	Built-up roofing - 3/8 in. Fiberboard sheathing - 1/2 in. Compliance Insulation R24.00 Plywood - 3/4 in.
interior R-0 Wall39	InteriorWall	300	NA	0	NA	U-Factor: 0.304	N	Gypsum Board - 5/8 in. Air - Cavity - Wall Roof Ceiling - 4 in. or more Gypsum Board - 1/2 in.

[1] *Status: N - New, A – Altered, E – Existing*

G4. OPAQUE DOOR SUMMARY

1	2	3
Assembly Name	**Overall U-factor**	**Status[1]**
Metal Door55	0.700	N

Project Name:	Freedom High School Auxiliary Gym	NRCC-PRF-01-E	Page 6 of 15
Project Address:	1050 Neroly Road Oakley 94561	Calculation Date/Time:	12:27, Tue, Dec 22, 2020
Input File Name:	Freedom High Auxiliary Gym.cibd19x		

G5. FENESTRATION ASSEMBLY SUMMARY

1	2	3	4	5	6	7	8	9
Fenestration Assembly Name / Tag or I.D.	**Fenestration Type / Product Type / Frame Type**	**Certification Method[1]**	**Assembly Method**	**Area ft²**	**Overall U-factor**	**Overall SHGC**	**Overall VT**	**Status[2]**
Door Dual Metal Clear	VerticalFenestration GlazedDoor MetalFraming	Default Performance	SiteBuilt	210	0.77	0.70	0.53	N
Tubular 1x1 x 8 Skylights	Skylight FixedWindow MetalFramingWithThermalBreak	Default Performance	Manufactured	16	1.11	0.69	1.00	N
Storefront Dual Metal Clear	VerticalFenestration CurtainWall MetalFraming	Default Performance	SiteBuilt	112	0.71	0.73	0.88	N

[1] *Newly installed fenestration shall have a certified NFRC Label Certificate or use the CEC default tables found in Table 110.6-A and Table 110.6-B. Center of Glass (COG) values are for the glass-only, determined by the manufacturer, and are shown for ease of verification. Site-built fenestration values are calculated per Nonresidential Appendix NA6 and are used in the analysis.*
[2] *Status: N – New, A – Altered, E – Existing*

G6. OVERHANG DETAILS

This Section Does Not Apply

G7. FIN DETAILS

This Section Does Not Apply

H. HVAC SYSTEM SUMMARY

H1. DRY SYSTEM EQUIPMENT (furnaces, air handling units, heat pumps, VRF, economizers etc.)

Dry System Equipment [1] (Fan & Economizer info included below in Table N)

1	2	3	4	5	6	7	8	9	10
			Heating				Cooling		
Equipment Name	**Equipment Type**	**Qty**	**Total Heating Output (kBtu/h)**	**Supp Heat Source (Y/N)**	**Supp Heat Output (kBtuh)**	**Efficiency**	**Total Cooling Output (kBtu/h)**	**Efficiency**	**Status[2]**
AC1 and 2	SZAC (Packaged3Phase)	2	150	No	0	AFUE-81.0	145	EER-12.2	N

Project Name:	Freedom High School Auxiliary Gym	NRCC-PRF-01-E	Page 7 of 15
Project Address:	1050 Neroly Road Oakley 94561	Calculation Date/Time:	12:27, Tue, Dec 22, 2020
Input File Name:	Freedom High Auxiliary Gym.cibd19x		

H1. DRY SYSTEM EQUIPMENT (furnaces, air handling units, heat pumps, VRF, economizers etc.)

Dry System Equipment [1] (Fan & Economizer info included below in Table N)

1	2	3	4	5	6	7	8	9	10
			Heating				Cooling		
Equipment Name	**Equipment Type**	**Qty**	**Total Heating Output (kBtu/h)**	**Supp Heat Source (Y/N)**	**Supp Heat Output (kBtuh)**	**Efficiency**	**Total Cooling Output (kBtu/h)**	**Efficiency**	**Status[2]**
AC3	SZAC (Packaged3Phase)	1	67	No	0	AFUE-81.0	60	SEER-16.00 / EER-11.70	N
HP-FC1	SZHP (Split1Phase)	1	10	No	0	HSPF-8.200	11	SEER-14.000 / EER-13.000	N
HP-FC2	SZHP (Split1Phase)	1	22	No	0	HSPF-8.200	18	SEER-14.000 / EER-12.700	N

[2] *Status: N – New, A – Altered, E – Existing*

H2. FAN SYSTEMS SUMMARY[1]

1	2	3	4	5	6	7	8	9	10	11	12	13
	System Type	Design OA	Supply Fan				Return Fan					
Name or Item Tag	**packaged, DOAS, etc.**	**CFM**	**CFM**	**BHP**	**Watts**	**Control**	**CFM**	**BHP**	**Watts**	**Control**	**Economizer Type (if present)**	**Status[2]**
AC1 and 2	SZAC	1800	5000	2.500	2082.7	ConstantVolume	NA	NA	NA	NA	FixedDryBulb	N
AC3	SZAC	697	2000	1.000	862.0	ConstantVolume	NA	NA	NA	NA	FixedDryBulb	N
HP-FC1	SZHP	19	378	0.160	139.9	ConstantVolume	NA	NA	NA	NA	NoEconomizer	N
HP-FC2	SZHP	0	484	0.206	179.9	ConstantVolume	NA	NA	NA	NA	NoEconomizer	N

[2] *Status: N – New, A – Altered, E – Existing*

H3. EXHAUST FAN SUMMARY

1	2	3	4	5	6	7
System ID	**Zone Name**	**Qty**	**CFM**	**Motor BHP**	**Motor Watts**	**Total Static Pressure (in H20)**
104 Custodian42	2-107 Classroom	1	150	0.046	40.0	1.26

Project Name:	Freedom High School Auxiliary Gym	NRCC-PRF-01-E	Page 8 of 15
Project Address:	1050 Neroly Road Oakley 94561	Calculation Date/Time:	12:27, Tue, Dec 22, 2020
Input File Name:	Freedom High Auxiliary Gym.cibd19x		

H4. Wet System Equipment (boilers, chillers, cooling towers, etc.)

1	2	3	4	5	6	7	8	9	10	11	12
							Pumps				
Name or Item Tag	**Equipment Type**	**Qty**	**Vol (gal)**	**Rated Capacity (kBtu/h)**	**Efficiency**	**Standby Loss**	**Qty**	**GPM**	**HP**	**VSD (Y/N)**	**Status[2]**

[2] *Status: N – New, A – Altered, E – Existing*

H5. SYSTEM SPECIAL FEATURES

1	2	3	4	5	6
System Name	**Optimum Start**	**Window Interlocks per §140.4(n)**	**Evaporative Cooling**	**Heat Recovery**	**Other Controls**
AC1 and 2	No Optimum Start	NA	No Evaporative Cooler	No Heat Recovery	1 Zones With CO2Sensor Vent. Control, No DDC Fixed DryBulb Economizer No Supply Air Temp. Control
AC3	No Optimum Start	NA	No Evaporative Cooler	No Heat Recovery	1 Zones With CO2Sensor Vent. Control, No DDC Fixed DryBulb Economizer No Supply Air Temp. Control
HP-FC1	No Optimum Start	NA	No Evaporative Cooler	No Heat Recovery	No DCV Controls, No DDC No Economizer No Supply Air Temp. Control
HP-FC2	No Optimum Start	NA	No Evaporative Cooler	No Heat Recovery	No DCV Controls, No DDC No Economizer No Supply Air Temp. Control
DHW1 - SHW	NA	NA	NA	NA	Fixed Temperature Control, No DDC

Notes: This table includes controls related to the performance path only. For projects using the prescriptive path, mandatory and prescriptive controls requirements are documented on the NRCC-MCH-E.

H6. MECHANICAL VENTILATION

1	2	3	4	5	6	7	8	9
	Mechanical Ventilation							
Zone Name	**Ventilation Function**	**# hotel rooms**	**# of people**	**# of bedrooms**	**Supply OA CFM**	**Exhaust CFM**	**Conditioned Area (sf)**	**DCV or Occupant Sensor Controls, or Both**
1-101 Gymnasium	Education - Multiuse assembly	0	240.01	0	3600	0	7200	NA

Project Name:	Freedom High School Auxiliary Gym	NRCC-PRF-01-E	Page 9 of 15
Project Address:	1050 Neroly Road Oakley 94561	Calculation Date/Time:	12:27, Tue, Dec 22, 2020
Input File Name:	Freedom High Auxiliary Gym.cibd19x		

H6. MECHANICAL VENTILATION

1	2	3	4	5	6	7	8	9
	Mechanical Ventilation							
Zone Name	**Ventilation Function**	**# hotel rooms**	**# of people**	**# of bedrooms**	**Supply OA CFM**	**Exhaust CFM**	**Conditioned Area (sf)**	**DCV or Occupant Sensor Controls, or Both**
2-107 Classroom	Education - Classrooms (ages 9-18) General - Corridors Exhaust - Janitor closets, trash rooms, recycling Exhaust - Toilets, private General - Unoccupied Misc - All others	0	43.18	0	697	150	2501	NA
3-103 Office	Office - Office space	0	0.65	0	19	0	129	NA
4-108 Fire Riser	General - Unoccupied	0	0.03	0	0	0	18	NA

Multifamily or Hotel/Motel Occupancy? (if "Yes", see DOMESTIC/SERVICE HOT WATER SYSTEM SUMMARY)	No
Does the Project include Zonal Systems?	Yes

H7. ZONAL SYSTEM AND TERMINAL UNIT SUMMARY

1	2	3	4	5	6	7	8	9	10	11	12
			Rated Capacity (kBtuh)		Airflow (cfm)			Fan			
System ID	**Zone Name**	**System Type**	**Heating**	**Cooling**	**Design**	**Min.**	**Min. Ratio**	**BHP**	**Watts**	**Cycles**	**ECM Motor**
1-101 Gymnasium-Trm	1-101 Gymnasium	Uncontrolled	NA	NA	10000	NA	0.00	NA	NA	NA	☐
2-107 Classroom-Trm	2-107 Classroom	Uncontrolled	NA	NA	2000	NA	0.00	NA	NA	NA	☐
3-103 Office-Trm	3-103 Office	Uncontrolled	NA	NA	378	NA	0.00	NA	NA	NA	☐
4-108 Fire Riser-Trm	4-108 Fire Riser	Uncontrolled	NA	NA	484	NA	0.00	NA	NA	NA	☐

H8. EVAPORATIVE COOLER SUMMARY

This Section Does Not Apply

QUATTROCCHI KWOK ARCHITECTS
Main:
636 Fifth Street, Santa Rosa, CA 95404
East Bay:
55 Harrison Street, Suite 525,
Oakland, CA 94607
(707) 576-0829

LICENSED ARCHITECT
JIM THEISS
LICENSE # C22643
EXP JUNE 30, 2021
STATE OF CALIFORNIA

SIGNED: MAY 5, 2021

FREEDOM HIGH SCHOOL

NEW AUXILIARY GYMNASIUM

1050 NEROLY RD,
OAKLEY, CA 94561

LIBERTY UNION HIGH SCHOOL DISTRICT

DSA APP NO. 01-119278

ARCH PROJECT NO: 1869.00
DRAWN BY:
DRAWING SCALE:
PTN: 61721-78 FILE NO: 7-H4

BID DOCUMENT

APRIL 27, 2021

SHEET TITLE

TITLE 24 ENERGY CALCS

SHEET NUMBER

T-1.1

BIMcloud: archiserver - BIMcloud Basic for ARCHICAD 22/1869.00 Freedom HS Aux. Gym CD 4/27/2021 1:28 PM

I. DOMESTIC/SERVICE HOT WATER SYSTEM SUMMARY

I1. DHW EQUIPMENT SUMMARY

1	2	3	4	5	6	7	8	9	10	11
DHW Name	Heater Element Type	Tank Type	Qty	Tank Vol (gal)	Rated Input (kBtu/h)	Efficiency	Tank Insulation R-value (int/Ext)	Standby Loss Fraction	Heat Pump Type	Tank Location or Ambient Condition
AO Smith DEL 202	Electricity	Storage	1	20.00	3.0 (kW)	UEF: 0.92	NA	SBLF: NA	NA	NA

I2. MULTI-FAMILY CENTRAL DHW SYSTEM DETAILS

This Section Does Not Apply

I3. SOLAR HOT WATER HEATING SUMMARY

This Section Does Not Apply

J. COVERED PROCESS SUMMARY

This Section Does Not Apply

K. INDOOR LIGHTING SUMMARY

This Section Does Not Apply

L. DECLARATION OF REQUIRED CERTIFICATES OF INSTALLATION

Table Instructions: Selections shall be made by Documentation Author to indicate which Certificates of Installation must be submitted for the features to be recognized for compliance. These documents must be retained and provided to the building inspector during construction and can be found online at: https://www.energy.ca.gov/title24/2019standards/2019_compliance_documents/Nonresidential_Documents/NRCI/

Building Component	YES	NO	Form/Title	Field Inspector Pass	Field Inspector Fail
Envelope	☒	☐	NRCI-ENV-01-E - Must be submitted for all buildings	☐	☐
Mechanical	☒	☐	NRCI-MCH-01-E - Must be submitted for all buildings	☐	☐
Plumbing	☒	☐	NRCI-PLB-01-E - Must be submitted for all buildings	☐	☐
	☐	☒	NRCI-PLB-02-E - Must be submitted for high-rise residential and hotel/ motel central hot water distribution systems to be recognized for compliance	☐	☐
	☐	☒	NRCI-PLB-03-E - Must be submitted for high-rise residential and hotel/motel single dwelling unit hot water system distribution systems to be recognized for compliance	☐	☐
	☐	☒	NRCI-PLB-21-E - Must be HERS verified for central systems in high-rise residential hotel/ motel application	☐	☐
	☐	☒	NRCI-PLB-22-E - Must be HERS verified for single dwelling unit systems in high-rise residential, hotel/motel application	☐	☐
	☐	☒	NRCI-STH-01-E - Must be submitted for solar hot water heating systems	☐	☐
Indoor Lighting	☐	☒	NRCI-LTI-01-E - Must be submitted for all buildings	☐	☐
	☐	☒	NRCI-LTI-02-E - Must be submitted for a lighting control system, or for an Energy Management Control System (EMCS) to be recognized for compliance	☐	☐
	☐	☒	NRCI-LTI-04-E - Must be submitted for two interlocked systems serving an auditorium, a convention center, a conference room, a multipurpose room, or a theater to be recognized for compliance	☐	☐
	☐	☒	NRCI-LTI-05-E - Must be submitted for a Power Adjustment Factor (PAF) to be recognized for compliance	☐	☐
	☐	☒	NRCI-LTI-06-E - Must be submitted for additional wattage installed in a video conferencing studio to be recognized for compliance	☐	☐
Covered Process	☐	☒	NRCI-PRC-01-E - Must be submitted for all Covered Processes	☐	☐

M. DECLARATION OF REQUIRED CERTIFICATES OF ACCEPTANCE

Table Instructions: Selections shall be made by Documentation Author to indicate which Certificates of Acceptance must be submitted for the features to be recognized for compliance. These documents must be provided to the building inspector during construction and must be completed through an Acceptance Test Technician Certification Provider (ATTCP). For more information visit:https://www.energy.ca.gov/title24/2019standards/2019_compliance_documents/Nonresidential_Documents/NRCA/

Building Component	YES	NO	Form/Title	Field Inspector Pass	Field Inspector Fail
Envelope	☒	☐	NRCA-ENV-02-F - NRFC label verification for fenestration	☐	☐
	☐	☐	NRCA-ENV-03-F - Daylighting Design PAFs	☐	☐
Indoor Lighting	☐	☒	NRCA-LTI-02-A - Occupancy Sensors and Automatic Time Switch Controls	☐	☐
	☐	☒	NRCA-LTI-03-A - Automatic Daylight Controls	☐	☐
	☐	☒	NRCA-LTI-04-A - Demand Responsive Lighting Controls	☐	☐
	☐	☒	NRCA-LTI-05-A - Institutional Tuning Power Adjustment Factor (PAF)	☐	☐
Covered Process	☐	☒	NRCA-PRC-02-F - Kitchen Exhaust	☐	☐
	☐	☒	NRCA-PRC-03-F - Garage Exhaust	☐	☐
	☐	☒	NRCA-PRC-12-F – Elevator Lighting and Ventilation Controls	☐	☐
	☐	☒	NRCA-PRC-13-F –Escalator and Moving Walkways Speed Control	☐	☐
	☐	☒	NRCA-PRC-14-F – Lab Exhaust Ventilation System	☐	☐
	☐	☒	NRCA-PRC-15-F - Fume Hood Automatic Sash Closures System	☐	☐

M. DECLARATION OF REQUIRED CERTIFICATES OF ACCEPTANCE

Table Instructions: Selections shall be made by Documentation Author to indicate which Certificates of Acceptance must be submitted for the features to be recognized for compliance. These documents must be provided to the building inspector during construction and must be completed through an Acceptance Test Technician Certification Provider (ATTCP). For more information visit:https://www.energy.ca.gov/title24/2019standards/2019_compliance_documents/Nonresidential_Documents/NRCA/

Building Component	YES	NO	Form/Title	Field Inspector Pass	Field Inspector Fail
Mechanical	☒	☐	NRCA-MCH-02-A Outdoor Air must be submitted for all newly installed HVAC units. Note: MCH02-A can be performed in conjunction with MCH-07-A Supply Fan VFD Acceptance (if applicable) since testing activities overlap	☐	☐
	☒	☐	NRCA-MCH-03-A Constant Volume Single Zone HVAC	☐	☐
	☐	☒	NRCA-MCH-04(a)-H Air Distribution Duct Leakage - HERS Verification required	☐	☐
	☐	☐	NRCA-MCH-04(b)-A Air Distribution Duct Leakage - ATT only	☐	☐
	☒	☐	NRCA-MCH-05-A Air Economizer Controls	☐	☐
	☒	☐	NRCA-MCH-06-A Demand Control Ventilation Systems Acceptance must be submitted for all systems required to employ demand controlled ventilation (refer to §120.1(c)3) can vary outside ventilation flow rates based on maintaining interior carbon dioxide (CO2) concentration setpoints	☐	☐
	☐	☒	NRCA-MCH-07-A Supply Fan Variable Flow Controls	☐	☐
	☐	☒	NRCA-MCH-08-A Valve Leakage Test	☐	☐
	☐	☒	NRCA-MCH-09-A Supply Water Temperature Reset Controls	☐	☐
	☐	☒	NRCA-MCH-10-A Hydronic System Variable Flow Controls	☐	☐
	☐	☒	NRCA-MCH-11-A Automatic Demand Shed Controls	☐	☐
	☒	☐	NRCA-MCH-12-A FDD for Packaged Direct Expansion Units	☐	☐
	☐	☒	NRCA-MCH-13-A Automatic FDD for Air Handling Units and Zone Terminal Units Acceptance	☐	☐
	☐	☒	NRCA-MCH-14-A Distributed Energy Storage DX AC Systems Acceptance	☐	☐
	☐	☒	NRCA-MCH-15-A Thermal Energy Storage (TES) System Acceptance	☐	☐
	☐	☒	NRCA-MCH-16-A Supply Air Temperature Reset Controls	☐	☐
	☐	☒	NRCA-MCH-17-A Condenser Water Temperature Reset Controls	☐	☐
	☐	☒	NRCA-MCH-18 Energy Management Control Systems	☐	☐
	☐	☒	NRCA-MCH-19 Occupancy Sensor Controls	☐	☐

N. DECLARATION OF REQUIRED CERTIFICATES OF VERIFICATION

Table Instructions: Selections shall be made by Documentation Author to indicate which Certificates of Verification must be submitted for the features to be recognized for compliance. These documents must be retained and provided to the building inspector during construction and can be found online at: https://www.energy.ca.gov/title24/2019standards/2019_compliance_documents/Nonresidential_Documents/NRCV/

Building Component	YES	NO	Form/Title	Field Inspector Pass	Field Inspector Fail
Mechanical	☐	☒	NRCV-MCH-04-H Duct Leakage Test	☐	☐
	☐	☒	NRCV-MCH-24-H Enclosure Air Leakage	☐	☐
	☐	☒	NRCV-MCH-27 Indoor Air Quality & Mechanical Ventilation	☐	☐
	☐	☒	NRCV-MCH-32-H Local Mechanical Exhaust	☐	☐
Plumbing	☐	☒	NRCV-PLB-21-H - HERS verified central systems in high-rise residential, hotel/motel application	☐	☐
	☐	☒	NRCV-PLB-22-H - HERS verified single dwelling unit systems in high-rise residential, hotel/motel application	☐	☐

DOCUMENTATION AUTHOR'S DECLARATION STATEMENT

I certify that this Certificate of Compliance documentation is accurate and complete.

Documentation Author Name: Sarah Pernula	Signature: Sarah Pernula
Company: SOLDATA Energy Consulting	
Address: 2227 Capricorn Way	Signature Date: 2020-12-22
City/State/Zip: Santa Rosa CA 95407	CEA/ HERS Certification Identification (if applicable): NR16-90-20043
Phone: 707.545.4440	

RESPONSIBLE PERSON'S DECLARATION STATEMENT

I certify the following under penalty of perjury, under the laws of the State of California:

1. The information provided on this Certificate of Compliance is true and correct.
2. I am eligible under Division 3 of the Business and Professions Code to accept responsibility for the building design or system design identified on this Certificate of Compliance (responsible designer)
3. The energy features and performance specifications, materials, components, and manufactured devices for the building design or system design identified on this Certificate of Compliance conform to the requirements of Title 24, Part 1 and Part 6 of the California Code of Regulations.
4. The building design features or system design features identified on this Certificate of Compliance are consistent with the information provided on other applicable compliance documents, worksheets, calculations, plans and specifications submitted to the enforcement agency for approval with this building permit application.
5. I will ensure that a completed signed copy of this Certificate of Compliance shall be made available with the building permit(s) issued for the building, and made available to the enforcement agency for all applicable inspections. I understand that a completed signed copy of this Certificate of Compliance is required to be included with the documentation the builder provides to the building owner at occupancy.

Responsible Envelope Designer Name: Jim Theiss, Architect	Signature:	
Company: Quattrocchi Kwok Architects		
Address: 636 Fifth Street	Date Signed: 12/23/2020	
City/State/Zip: Santa Rosa CA 95404		
Phone: 707 576-0829	Title: Architect	License #: C-22643
Responsible Lighting Designer Name:	Signature: NOT IN SCOPE	
Company: O'Mahony & Myer Electrical Eng & Lighting Dsgn		
Address: 4340 Redwood Hwy, Suite 245	Date Signed:	
City/State/Zip: San Rafael CA 94903		
Phone: 415 492-0420	Title:	License #:
Responsible Mechanical Designer Name: - specify -	Signature:	
Company: Costa Engineers Inc.		
Address: 3274 Villa Lane	Date Signed: December 22nd, 2020	
City/State/Zip: Napa CA 94558		
Phone: 707-252-9177	Title: Principal	License #: M31600

STATE OF CALIFORNIA

Solar Ready Areas

NRCC-SRA-E CALIFORNIA ENERGY COMMISSION

CERTIFICATE OF COMPLIANCE **NRCC-SRA-E**

This document is used to demonstrate compliance with mandatory requirements in §110.10 for newly constructed buildings which are either high-rise multifamily ten stories or fewer, hotel/motel ten stories or fewer or all other nonresidential buildings three stories or fewer. It is also used to demonstrate compliance with additions to these building types which add more than 2,000 ft² of roof area. Alterations or additions of less than 2,000ft² are not required to comply with §110.10.

Project Name:	Freedom High School Auxiliary Gym	**Report Page:**	**(Page 1 of 5)**
Project Address:	1050 Neroly Road	**Date Prepared:**	12/22/2020

A. GENERAL INFORMATION

01	Project Location (city)	Oakley	04	Building Type	Other nonresidential bldg 3 stories or fewer
02	Climate Zone	12	05	Construction Type	New Construction
03	☐ Roof is designed for vehicle traffic, parking or for heliport				
03a	Plan sheet showing roof design for vehicle traffic, parking or heliport exception:				

B. PROJECT SCOPE

The compliance path the project is using to comply per §110.10(b)1B is indicated below.

My project consists of (check one):

1		
☒	Provide Solar Ready Area no exceptions	The project has allocated a solar zone on the roof plan per requirements in §110.10(b), as documented in Table F.
☐	Exception to Solar Ready Area: Installed Solar Photovoltaic System	The project includes a permanently installed solar electric system having a nameplate DC power rating, measured under Standard Test Conditions, of no less than one watt per square foot of roof area as documented in Table G.
	Exception to Solar Ready Area: Installed Solar Water Heating System	The project is a hotel/motel or high-rise multifamily occupancy and includes a permanently installed domestic solar water-heating system complying with §150.1(c)8Biii and Reference Residential Appendix RA4, as documented in Table H.
	Exception to Solar Ready Area: Smart Thermostat and Alternative Energy Efficiency Measure	The project is a high-rise multifamily occupancy where all thermostats in each dwelling unit comply with §110.12(a) AND at least one additional measure listed in Exception 4 to §110.10(b)1B is installed, as documented in Table I.

Registration Number: Registration Date/Time: Registration Provider: Energysoft

STATE OF CALIFORNIA

Solar Ready Areas

NRCC-SRA-E CALIFORNIA ENERGY COMMISSION

CERTIFICATE OF COMPLIANCE **NRCC-SRA-E**

Project Name:	Freedom High School Auxiliary Gym	**Report Page:**	**(Page 2 of 5)**
Project Address:	1050 Neroly Road	**Date Prepared:**	12/22/2020

C. COMPLIANCE RESULTS

Results in this table are automatically calculated from data input and calculations in Tables F through I. Note: If any cell on this table says "DOES NOT COMPLY" or "COMPLIES with Exceptional Conditions" refer to Table D. for guidance or see the applicable Table referenced below.

Allocated Solar Zone				Installed PV System				Installed SWH System				Smart Tstat and Alternative EE Measure		
01		02		03		04		05		06		07	08	09
Required Minimum Area (ft²)	<=	Designated Area (ft²)	OR	Required Minimum DC Power Rating (Watts)	<=	Designed DC Power Rating (Watts)	OR	Required Minimum Solar Savings Fraction	<=	Designed/Rated Solar Savings Fraction	OR	JA5 Compliant Thermostat Specified?	Alternative Energy Efficiency Measure	
(See Table F)				(See Table G)				(See Table H)				(See Table I)		COMPLIES
1564.8	<=	1700	OR		<=		OR		<=		OR			COMPLIES
Sheet A-M4.1				Location within the construction documents showing the location for inverters and metering equipment and a pathway for the routing of conduit/plumbing to the electrical service/ water heating system per §110.10(c).										COMPLIES

D. EXCEPTIONAL CONDITIONS

This table is auto-filled with uneditable comments because of selections made or data entered in tables throughout the form.

E. ADDITIONAL REMARKS

This table is includes remarks made by the permit applicant to the Authority Having Jurisdiction.

Registration Number: Registration Date/Time: Registration Provider: Energysoft

STATE OF CALIFORNIA

Solar Ready Areas

NRCC-SRA-E CALIFORNIA ENERGY COMMISSION

CERTIFICATE OF COMPLIANCE **NRCC-SRA-E**

Project Name:	Freedom High School Auxiliary Gym	**Report Page:**	**(Page 3 of 5)**
Project Address:	1050 Neroly Road	**Date Prepared:**	12/22/2020

F. ALLOCATED SOLAR ZONE

This table is completed if the project is designating a solar zone to comply with §110.10(b)1B. New construction consider the total roof area; Additions consider newly added roof area. This table demonstrates that the project has designated the minimum area required for the Allocated Solar Zone, and also that the requirements for Solar Zone Subareas have been met. Each subarea must be shown on a roof plan or documented in construction documents. The solar zones must also comply with fire code requirements, including, but not limited to, setback and pathway requirements. Requirements for interconnection pathways must also be included in construction documents, and the location is specified in this table.

Required Minimum Solar Zone

01	02	03	04	05	06			07	08
					Potential Solar Zone Areas: Roof areas with >= 70% Solar Access				
Minimum Solar Zone Area Calculation Method	Total New or Added Roof Area (ft²)	Total New or Added Roof Area Covered with Skylights (ft²)	Minimum Solar Zone Based on Total or Added Roof Area (0.15 x (Roof-Skylt)) (ft²)	Method/ Tools Used to Determine Annual Solar Access for Potential Zones[1]	Low-Sloped Area (<= 2:12 pitch) (ft²)	Steep-Sloped Area (> 2:12 pitch) Oriented 90 ° - 300 ° (ft²)	Total Potential Solar Zone Area (ft²)	Minimum Solar Zone Based on Potential Zone (0.5 x (Total Potential Zone)) (ft²)	Required Minimum Solar Zone Area (ft²)
Total New or Added Roof Area	10448	16	1564.8						1564.8

Designated Solar Zone Subareas

09	10	11	12	13	14	15	16	17	18	19
Subarea Name or Tag	Building Plan Reference	Roof or Overhang Slope (Low <= 2:12 pitch) (Steep > 2:12 pitch)	Is Steep-Sloped Roof or Overhang between 90 and 300 degrees?	Subarea Complies with Title 24, Part 9	Solar Zone Subarea Free of Obstructions per §110.10(b)3A	Subarea is Required Distance from Potential Obstructions per §110.10(b)3B	Is the Smallest Dimension 5 feet or greater?	Min. Area Required per Subarea (ft²)	Designated Area (ft²)	Subarea Complies?
Gym North	Sheet A-M4.1	LowSlope	No	Yes	Yes	Yes	Yes	160	600	COMPLIES
Gym South	Sheet A-M4.1	LowSlope	No	Yes	Yes	Yes	Yes	160	600	COMPLIES

Registration Number: Registration Date/Time: Registration Provider: Energysoft

QUATTROCCHI KWOK ARCHITECTS

Main:
636 Fifth Street, Santa Rosa, CA 95404
East Bay:
55 Harrison Street, Suite 525,
Oakland, CA 94607
(707) 576-0829

LICENSED ARCHITECT
JIM THEISS
LICENSE # C22643
EXP JUNE 30, 2021
STATE OF CALIFORNIA

SIGNED: MAY 5, 2021

FREEDOM HIGH SCHOOL

NEW AUXILIARY GYMNASIUM

1050 NEROLY RD,
OAKLEY, CA 94561

LIBERTY UNION HIGH SCHOOL DISTRICT

DSA APP NO. 01-119278

ARCH PROJECT NO: 1869.00

DRAWN BY:

DRAWING SCALE:

PTN: 61721-78 FILE NO: 7-H4

BID DOCUMENT

APRIL 27, 2021

SHEET TITLE

TITLE 24 ENERGY CALCS

SHEET NUMBER

T-1.2

BIMcloud: archiserver - BIMcloud Basic for ARCHICAD 22/1869.00 Freedom HS Aux. Gym. CD/4/27/2021;1:28 PM

STATE OF CALIFORNIA

Solar Ready Areas

NRCC-SRA-E

CALIFORNIA ENERGY COMMISSION

CERTIFICATE OF COMPLIANCE			**NRCC-SRA-E**
Project Name:	Freedom High School Auxiliary Gym	**Report Page:**	**(Page 4 of 5)**
Project Address:	1050 Neroly Road	**Date Prepared:**	12/22/2020

Classroom Wing	Sheet A-M4.1	LowSlope	No	Yes	Yes	Yes	Yes	160	500	COMPLIES
								Total Designated Solar Zone Area (ft²):		1700

Interconnection Pathways

Location in construction documents showing the location for inverters and metering equipment and a pathway for the routing of conduit/ plumbing to the electrical service/ water heating system per §110.10(c).	Sheet A-M4.1

[1]FOOTNOTE: This field is used to document how the percentage of annual solar access was determined per §110.10(b)1B. Solar access is the ratio of solar insolation including shade to the solar insolation without shade. Shading from obstructions located on the roof or any other part of the building shall not be included in the determination of annual solar access.

G. PERMANENTLY INSTALLED SOLAR PHOTOVOLTAIC (PV) SYSTEM

This section does not apply to this project.

H. PERMANENTLY INSTALLED SOLAR HOT WATER SYSTEMS

This section does not apply to this project.

I. SMART THERMOSTATS AND ALTERNATIVE EFFICIENCY MEASURE

This section does not apply to this project.

J. DECLARATION OF REQUIRED CERTIFICATES OF INSTALLATION

Selections have been made based on information provided in this document. If any selections have been changed by the permit applicant, an explanation should be included Table E. Additional Remarks. These documents must be provided to the building inspector during construction and can be found online at https://www.energy.ca.gov/title24/2019standards/2019_compliance_documents/Nonresidential_Documents/NRCI/

Yes	No	Form/Title	Field Inspector Pass	Field Inspector Fail
○	●	NRCI-SPV-01-E - Must be submitted for all newly installed Photovoltaic Systems (PV) being used to comply with §110.10(b)1B for high-rise multifamily, Hotel/Motel buildings less than 10 stories and nonresidential buildings less than 4 stories.	☐	☐
○	●	NRCI-STH-01-E - Must be submitted for all newly installed Solar Water Heating systems being used to comply with §110.10(b)1B for high-rise multifamily, Hotel/Motel buildings less than 10 stories and nonresidential buildings less than 4 stories.	☐	☐

K. DECLARATION OF REQUIRED CERTIFICATES OF ACCEPTANCE

There are no Certificates of Acceptance applicable to solar ready requirements.

STATE OF CALIFORNIA

Solar Ready Areas

NRCC-SRA-E

CALIFORNIA ENERGY COMMISSION

CERTIFICATE OF COMPLIANCE			**NRCC-SRA-E**
Project Name:	Freedom High School Auxiliary Gym	**Report Page:**	**(Page 5 of 5)**
Project Address:	1050 Neroly Road	**Date Prepared:**	12/22/2020

DOCUMENTATION AUTHOR'S DECLARATION STATEMENT

I certify that this Certificate of Compliance documentation is accurate and complete.

Documentation Author Name: Sarah Pernula	Documentation Author Signature: Sarah Pernula
Company: SOLDATA Energy Consulting	Signature Date: 2020-12-22
Address: 2227 Capricorn Way	CEA/ HERS Certification Identification (if applicable): NR16-90-20043
City/State/Zip: Santa Rosa CA 95407	Phone: 707.545.4440

RESPONSIBLE PERSON'S DECLARATION STATEMENT

I certify the following under penalty of perjury, under the laws of the State of California:

1. The information provided on this Certificate of Compliance is true and correct.
2. I am eligible under Division 3 of the Business and Professions Code to accept responsibility for the building design or system design identified on this Certificate of Compliance (responsible designer)
3. The energy features and performance specifications, materials, components, and manufactured devices for the building design or system design identified on this Certificate of Compliance conform to the requirements of Title 24, Part 1 and Part 6 of the California Code of Regulations.
4. The building design features or system design features identified on this Certificate of Compliance are consistent with the information provided on other applicable compliance documents, worksheets, calculations, plans and specifications submitted to the enforcement agency for approval with this building permit application.
5. I will ensure that a completed signed copy of this Certificate of Compliance shall be made available with the building permit(s) issued for the building, and made available to the enforcement agency for all applicable inspections. I understand that a completed signed copy of this Certificate of Compliance is required to be included with the documentation the builder provides to the building owner at occupancy.

Responsible Designer Name: Jim Theiss, Architect	Responsible Designer Signature:
Company: Quattrocchi Kwok Architects	Date Signed: 2020-12-22
Address: 636 Fifth Street	License: C-22643
City/State/Zip: Santa Rosa CA 95404	Phone: 707 576-0829

Registration Number: | Registration Date/Time: | Registration Provider: Energysoft

CA Building Energy Efficiency Standards - 2019 Nonresidential Compliance | Report Version: 2019.1.003 Schema Version: rev 20200601 | Report Generated: 2020-12-22 12:28:26

QUATTROCCHI KWOK ARCHITECTS

Main:
636 Fifth Street, Santa Rosa, CA 95404
East Bay:
55 Harrison Street, Suite 525,
Oakland, CA 94607
(707) 576-0829

LICENSED ARCHITECT
JIM THEISS
LICENSE # C22643
EXP JUNE 30, 2021
STATE OF CALIFORNIA

SIGNED: MAY 5, 2021

FREEDOM HIGH SCHOOL

NEW AUXILIARY GYMNASIUM

1050 NEROLY RD,
OAKLEY, CA 94561

LIBERTY UNION HIGH SCHOOL DISTRICT

DSA APP NO. 01-119278

ARCH PROJECT NO: 1869.00

DRAWN BY:

DRAWING SCALE:

PTN: 61721-78 FILE NO: 7-H4

BID DOCUMENT

APRIL 27, 2021

SHEET TITLE

TITLE 24 ENERGY CALCS

SHEET NUMBER

T-1.3

BIMcloud: archiserver - BIMcloud Basic for ARCHICAD 22/1869.00 Freedom HS Aux. Gym_CD;4/27/2021;1:28 PM

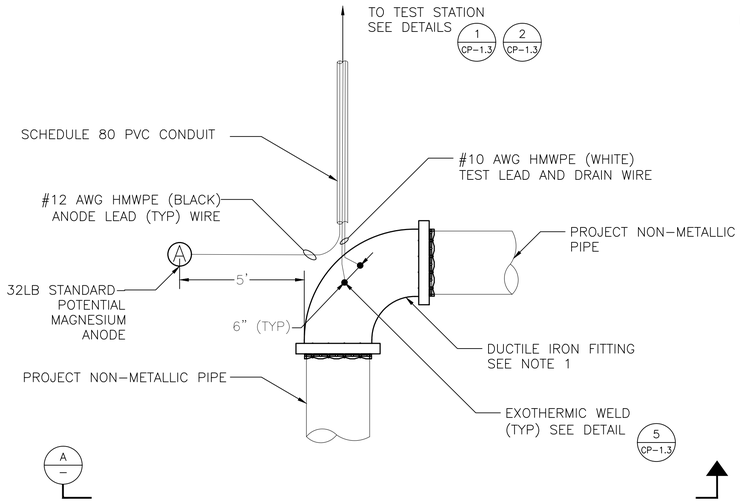

NOTE:

1. DUCTILE IRON FITTING MAY BE DIFFERENT GEOMETRY, SUCH AS TEE OR INLINE.
2. WRAP FITTING IN PETROLATUM WAX TAPE AND OVERLAP PIPE BY 2 TIMES THE PIPE DIAMETER.

ANODE TEST STATION (ATS) FOR METALLIC FITTING OR VALVE ON NON-METALLIC PIPE PLAN VIEW (1)
NTS

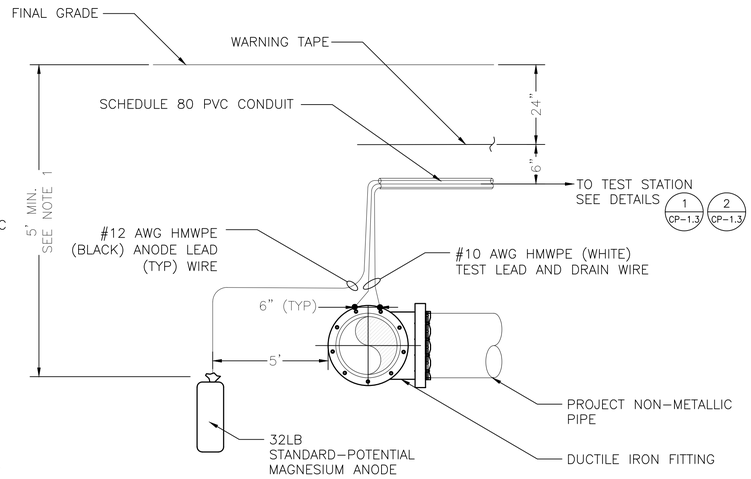

NOTE:

1. TOP OF ANODE SHALL BE AT OR BELOW PIPE INVERT.

ANODE TEST STATION (ATS) FOR METALLIC FITTING OR VALVE ON NON-METALLIC PIPE SECTION VIEW (A)
NTS

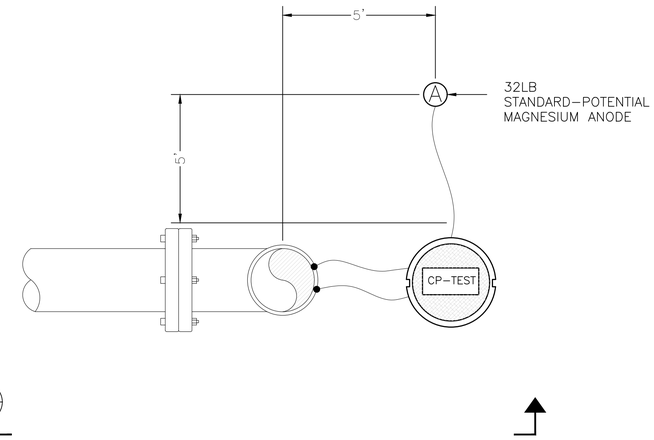

ANODE TEST STATION (ATS) FOR RISER PLAN VIEW (2)
NTS

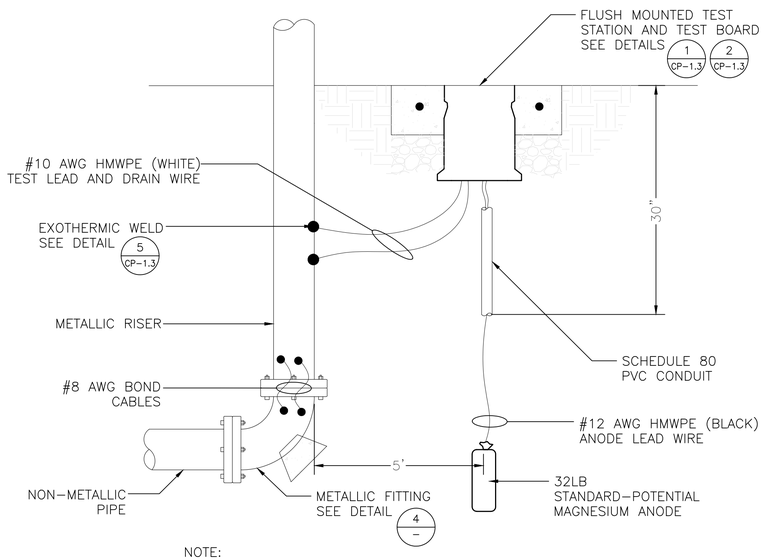

NOTE:

1. IF RISER IS DUCTILE IRON, BOND PIPE AND FITTINGS. RISER MAY HAVE 90 DEGREE ELBOW OR TEE. DUCTILE IRON PIPE AND FITTINGS SHALL HAVE POLYETHYLENE ENCASEMENT.
2. IF RISER IS STAINLESS STEEL, WRAP IN PETROLATUM WAX TAPE.

ANODE TEST STATION (ATS) FOR RISER SECTION VIEW (B)
NTS

DETAIL NOT USED

(3)

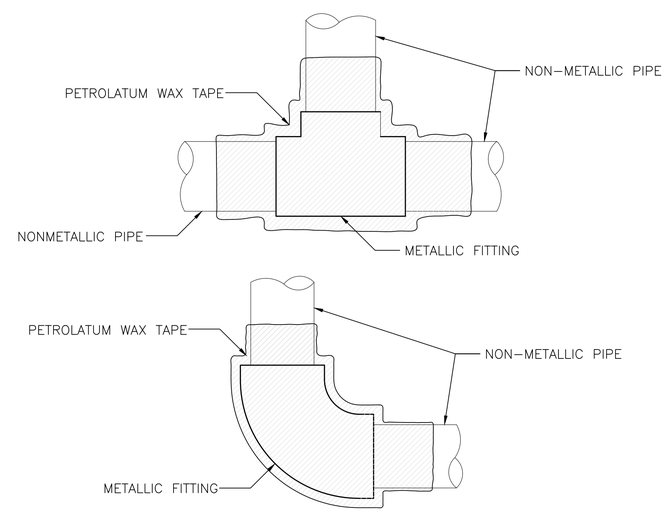

NOTES:

1. PETROLATUM WAX TAPE SHALL OVERLAP PIPE BY 2 TIMES THE PIPE DIAMETER.
2. ENCASE FITTING AND PETROLATUM WAX TAPE IN CONCRETE WITH 2-INCH COVER AT MINIMUM

CORROSION CONTROL FOR 2-INCH DIAMETER METALLIC FITTING (4)
NTS

QUATTROCCHI KWOK ARCHITECTS
Main:
636 Fifth Street, Santa Rosa, CA 95404
East Bay:
55 Harrison Street, Suite 525,
Oakland, CA 94607
(707) 576-0829

V&A
1000 Broadway, Suite 320
Oakland, CA 94607
Tel. (510) 903-6600, Fax (510) 903-6601

FREEDOM HIGH SCHOOL

NEW AUXILIARY GYMNASIUM

1050 NEROLY RD,
OAKLEY, CA 94561

LIBERTY UNION HIGH SCHOOL DISTRICT

DSA APP NO. 01-119278
ARCH PROJECT NO: 1869.00
DRAWN BY:
DRAWING SCALE:
PTN: 61721-78 FILE NO: 7-H4

BID DOCUMENT

APRIL 27, 2021

SHEET TITLE

CATHODIC PROTECTION

SHEET NUMBER

CP1.1

BIMcloud: archiserver - BIMcloud Basic for ARCHICAD 22/1869.00 Freedom HS Aux. Gym. CD:4/27/2021;1:28 PM

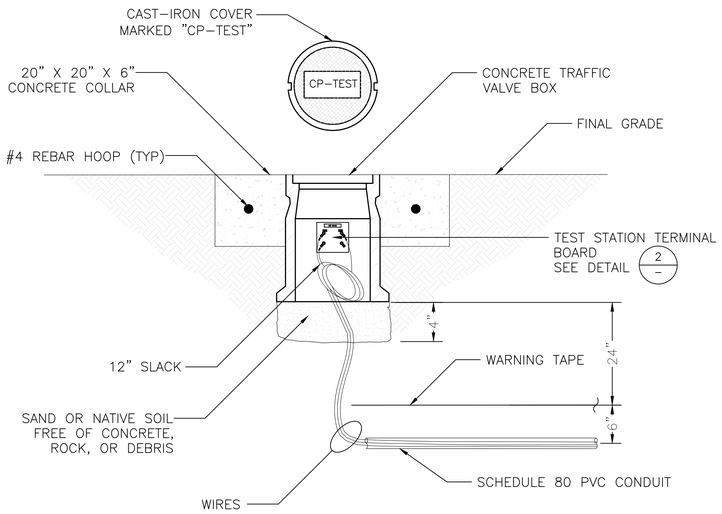

FLUSH MOUNTED TEST STATION DETAIL (1)
NTS

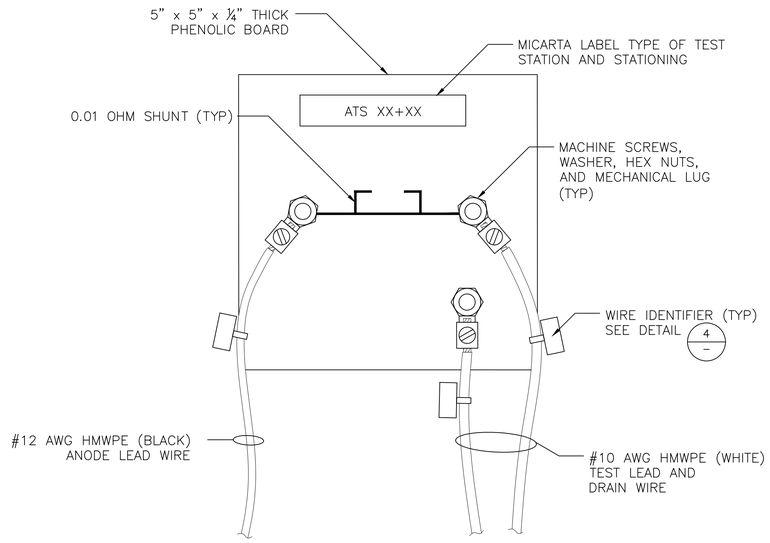

FLUSH-MOUNTED ANODE TEST STATION (ATS) TERMINAL BOARD DETAIL (2)
NTS

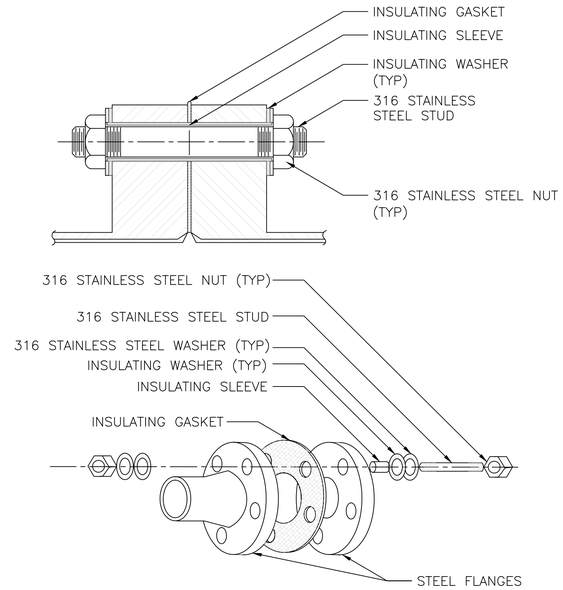

NOTE:

PETROLATUM WAX TAPE NOT SHOWN

DIELECTRIC INSULATING FLANGE KIT DETAIL WITH SECTION VIEW (3)
NTS

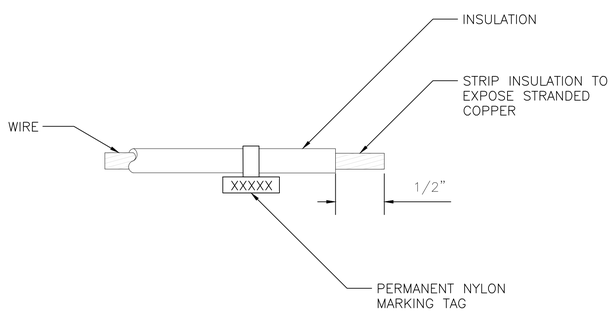

WIRE IDENTIFIER DETAIL (4)
NTS

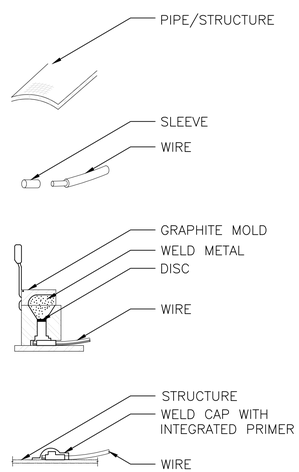

1. GRIND PIPE/STRUCTURE TO BARE METAL AND CLEAN SURFACE. GROUND AREA SHALL BE LARGE ENOUGH FOR EXOTHERMIC WELD AND SMALL ENOUGH TO BE COMPLETELY COVERED BY WELD CAP.
2. STRIP INSULATION FROM WIRE AND ATTACH SLEEVE.
3. HOLD MOLD FIRMLY WITH OPENING AWAY FROM OPERATOR. IGNITE WITH FLINT GUN. REMOVE SLAG FROM CONNECTION WITH CHIPPING HAMMER. TEST WELD WITH 22 OZ HAMMER.
4. COVER CONNECTION WITH WELD CAP WITH INTEGRATED PRIMER. REPAIR ALL DAMAGE TO COATING AND LINING IN ACCORDANCE WITH COATING AND LINING MFG RECOMMENDATIONS.

EXOTHERMIC WELD DETAIL FOR DUCTILE IRON AND STEEL PIPE (5)
NTS

QUATTROCCHI KWOK ARCHITECTS
Main:
636 Fifth Street, Santa Rosa, CA 95404
East Bay:
55 Harrison Street, Suite 525,
Oakland, CA 94607
(707) 576-0829

V&A
1000 Broadway, Suite 320
Oakland, CA 94607
Tel. (510) 903-6600, Fax (510) 903-6601

FREEDOM HIGH SCHOOL

NEW AUXILIARY GYMNASIUM

1050 NEROLY RD,
OAKLEY, CA 94561

LIBERTY UNION HIGH SCHOOL DISTRICT

DSA APP NO. 01-119278

ARCH PROJECT NO: 1869.00
DRAWN BY:
DRAWING SCALE:
PTN: 61721-78 FILE NO: 7-H4

BID DOCUMENT

APRIL 27, 2021

SHEET TITLE

CATHODIC PROTECTION

SHEET NUMBER

CP1.2

BIMcloud: archiserver - BIMcloud Basic for ARCHICAD 22/1869.00 Freedom HS Aux. Gym. CD;4/27/2021;1:28 PM