LIBERTY HIGH SCHOOL
NEW CLASSROOM BUILDINGS

850 2ND STREET, BRENTWOOD, CA 94513

LIBERTY UNION HIGH SCHOOL DISTRICT

DSA FILE NO: 7-H4 **DSA APPLICATION NO:** 01-119994 **PTN:** 61721-83

PROJECT TEAM

OWNER

Liberty Union High School District
20 Oak Street
Brentwood, CA 94513
Phone: 925-634-2166
Fax: 925-634-1687
Contact: Liz Robbins
Email: robbinsl@luhsd.net

ARCHITECT

Quattrocchi Kwok Architects
636 Fifth Street
Santa Rosa, CA 95404
Phone: 707-576-0829
Fax: 707-576-0295
Contact: Kevin Chapin
Email: kevinc@qka.com

CONSTRUCTION MANAGER

Lathrop Construction
4001 Park Rd.
Benicia, CA 94510
Phone: 707-746-8000
Fax: 707-746-8080
Contact: Anthony D'Amante
Email: anthony.d'amante@lathropconstruction.com

CIVIL ENGINEER

CBG Civil Engineers
2633 Camino Ramon, Suite 350
San Ramon, CA 94583
Phone: 925-866-0322
Contact: Jason Vogan
Email: jvogan@cbandg.com

STRUCTURAL ENGINEER

ZFA Structural Engineers
1212 Fourth Street, Suite Z
Santa Rosa, CA 95404
Phone: 707-526-0992
Fax: 707-526-0217
Contact: Chris Warner
Email: chrisw@zfa.com

MECHANICAL ENGINEER

Costa Engineers
3274 Villa Lane
Napa, CA 94558
Phone: 707-252-9177
Fax: 707-252-6473
Contact: Chris Del Core
Email: cdelcore@costaengineers.com

ELECTRICAL ENGINEER

O'Mahony & Myer
4340 Redwood Highway, Suite 245
San Rafael, CA 94903
Phone: 415-492-0420
Fax: 415-479-6962
Contact: Pieter Colenbrander
Email: pcolenbrander@ommconsulting.com

LANDSCAPE ARCHITECT

GSM Landscape Architects, Inc.
1700 Soscol Ave, Suite 23
Napa, CA 94559
Phone: 707-255-4630
Contact: Bart Ito
Email: bart@gsmlainc.com

FIRE PROTECTION

Cypress Engineering Group
8 Harris Ct, Suite A8
Monterey, CA 93940
Phone: 831-218-1802
Contact: Steve Rawson
Email: steve@cypresseg.com

ELEVATOR

VDA
1388 Sutter St, Suite 608
San Francisco, CA 94109
Phone: 415-243-0313
Fax: 415-243-0781
Cell: 415-610-1510
Contact: Colette Derr
Email: cderr@vdassoc.com

ENERGY CONSULTANT

SOLDATA Energy Consulting, Inc.
2227 Capricorn Way, Suite 202
Santa Rosa, CA 95407
Phone: 707-545-4440
Contact: Sarah
Email: sarah@soldata.com

IDENTIFICATION STAMP
DIV. OF THE STATE ARCHITECT
APP: 01-119994 INC:
REVIEWED FOR
SS ☑ FLS ☑ ACS ☑
DATE: 08/16/2022

QUATTROCCHI KWOK ARCHITECTS
Main:
636 Fifth Street, Santa Rosa, CA 95404
East Bay:
55 Harrison Street, Suite 525,
Oakland, CA 94607
(707) 576-0829

LICENSED ARCHITECT
JIM THEISS
LICENSE # C22643
EXP JUNE 30, 2023
STATE OF CALIFORNIA
SIGNED: JUNE 24, 2022

LIBERTY HIGH SCHOOL

NEW CLASSROOM BUILDINGS

850 2ND STREET
BRENTWOOD, CA
94513

LIBERTY UNION
HIGH SCHOOL
DISTRICT

DSA APP NO. 01-119994

ARCH PROJECT NO:	1925.00
DRAWN BY:	JDS
DRAWING SCALE:	N.T.S.
PTN: 61721-83	FILE NO: 7-H4

CONSTRUCTION DOCUMENTS

JUNE 24, 2022

SHEET TITLE

COVER SHEET

SHEET NUMBER

G-0.1

BIMcloud: archiserver - BIMcloud Basic for ARCHICAD 22/1925.00 Liberty HS Classroom, BLDG A, AC22:7/27/2022:5:27 PM

ABBREVIATIONS

&	AND
L	ANGLE
@	AT
℄	CENTERLINE
'	FEET
"	INCHES
d	PENNY
#	POUND/ NUMBER
AB	ANCHOR BOLT
ABBREV	ABBREVIATION
AC	ASPHALT CONCRETE
A/C	AIR CONDITIONING
ACC	ACCESSIBLE
ACOUS	ACOUSTICAL
AC T	ACOUSTICAL TILE
AD	AREA DRAIN
ADJ	ADJUSTABLE
A.F.F.	ABOVE FINISH FLOOR
AGG	AGGREGATE
ALUM	ALUMINUM
ANOD	ANODIZED
APPROX	APPROXIMATE
ARCH	ARCHITECTURAL
ASPH	ASPHALT
BD	BOARD
BITUM	BITUMINOUS
BLDG	BUILDING
BLK	BLOCK
BLKG	BLOCKING
BM	BEAM
BOT	BOTTOM
BO	BY OWNER
BRK	BREAK
BRG	BEARING
BTWN	BETWEEN
BU	BUILT-UP
BUR	BUILT-UP ROOFING
CAB	CABINET
CB	CATCH BASIN
CBC	CALIFORNIA BUILDING CODE
CEM	CEMENT
CER	CERAMIC
CI	CAST IRON
CIR	CIRCLE
CJ	CONTROL JOINT
CORR	CORRIDOR
CL	CLOSET/ CENTER LINE
CLG	CEILING
CLR	CLEAR
CLS	CLOSURE
CMU	CONCRETE MASONRY UNIT
CO	CLEANOUT
COL	COLUMN
COMB	COMBINATION
COMP	COMPOSITION
CONC	CONCRETE
CONN	CONNECTION
CONST	CONSTRUCTION
CONT	CONTINUOUS
CONTR	CONTRACTOR
CT	CERAMIC TILE
CTR	CENTER
CTSK	COUNTERSINK
CUST	CUSTODIAN
CW	COLD WATER
DBL	DOUBLE
DEPT	DEPARTMENT
DET	DETAIL
DF	DRINKING FOUNTAIN
DG	DECOMPOSED GRANITE
DI	DRAIN INLET
DIA	DIAMETER
DIAG	DIAGONAL
DIM	DIMENSION
DISP	DISPOSAL
DIV	DIVISION
DN	DOWN
DO	DOOR OPENING
DIR	DIRECTLY
DR	DOOR
DSA	DIVISION OF STATE ARCHITECT
DS	DOWN SPOUT
DSP	DRY STAND PIPE
DT	DRAIN TILE
DW	DISHWASHER
DWG	DRAWING
DWR	DRAWER
E	EAST
(E)	EXISTING
EA	EACH
EB	EXPANSION BOLT
EE	EACH END
EF	EXHAUST FAN
EJ	EXPANSION JOINT
EL	ELEVATION GRADE
ELEC	ELECTRICAL
ELEV	ELEVATION
EMER	EMERGENCY
EMT	ELECTRIC METALLIC TUBING
ENCL	ENCLOSURE
EP	ELECTRIC PANEL
EQ	EQUAL
EQUIP	EQUIPMENT
EQUIV	EQUIVALENT
ES	EACH SIDE
EW	EACH WAY
EXH	EXHAUST
EXIST	EXISTING
EXP	EXPANSION
EXT	EXTERIOR
F	FACE
FA	FIRE ALARM
FCO	FLOOR CLEAN OUT
FD	FLOOR DRAIN
FDN	FOUNDATION
FE	FIRE EXTINGUISHER
FEC	FIRE EXTINGUISHER CABINET
FF	FINISH FLOOR
FG	FINISH GRADE
FGL	FIBERGLAS
FH	FIRE HYDRANT
FHMS	FLAT HEAD MACHINE SCREW
FHS	FIRE HOSE STATION
FHWS	FLAT HEAD WOOD SCREW
FIN	FINISH
FIXT	FIXTURE
FL	FLOOR LINE
FLASH	FLASHING
FLUOR	FLUORESCENT
FLR	FLOOR
FM / FOM	FACE OF MASONRY
FN	FACE NAIL
FOC	FACE OF CONCRETE
FOF	FACE OF FINISH
FOS	FACE OF STUD
FRMG	FRAMING
FR	FIRE-RESISTANT
FRP	FIBERGLASS REINFORCED PANEL
FT	FEET
FTG	FOOTING
FURR	FURRING

GA	GAUGE
GALV	GALVANIZED
GB	GRAB BAR
GC	GENERAL CONTRACTOR
GI	GALVANIZED IRON
GL	GLASS/ GLAZING
GLB	GLUE LAMINATED BEAM
GND	GROUND
GR	GRADE
GYP BD	GYPSUM BOARD
HB	HOSE BIBB
HC	HOLLOW CORE
HDR	HEADER
HDWD	HARDWOOD
HDWR	HARDWARE
HM	HOLLOW METAL
HOR	HORIZONTAL
HP	HIGH POINT
HR	HOUR
HSS	HOLLOW STEEL SECTION
HT	HEIGHT
HTG	HEATING
HVAC	HEATING, VENTILATING, AIR-CONDITIONING
ID	INSIDE DIAMETER
INSUL	INSULATION
INT	INTERIOR
INTEG	INTEGRAL
INTERMED	INTERMEDIATE
INV	INVERT
JH	JOIST HANGER
JST	JOIST
JT	JOINT
KIT	KITCHEN
KP	KICK PLATE
LAB	LABORATORY
LAM	LAMINATE
LAV	LAVATORY
LL	LIVE LOAD
LP	LOW POINT
LT	LIGHT
MAT	MATERIAL
MAX	MAXIMUM
MB	MACHINE BOLT
MC	MEDICINE CABINET
MECH	MECHANICAL
MED	MEDIUM
MEMB	MEMBRANE
MFR	MANUFACTURER
MH	MANHOLE
MIN	MINIMUM
MIR	MIRROR
MISC	MISCELLANEOUS
MO	MASONRY OPENING
MOD	MODULAR
MR	MOISTURE RESISTANT
MTD	MOUNTED
MTL	METAL
MUL	MULLION
N	NORTH
(N)	NEW
NAT	NATURAL
N.I.C.	NOT IN CONTRACT
NO	NUMBER
NOM	NOMINAL
N.T.S.	NOT TO SCALE
O/	OVER
OA	OVERALL
OBS	OBSCURE
OC	ON CENTER
OD	OUTSIDE DIAMETER
OF	OVERFLOW
OFCI	OWNER FURNISHED/ CONTRACTOR INSTALLED
O.L.F.	OCCUPANT LOAD FACTOR
OFF	OFFICE
OPNG	OPENING
OPP	OPPOSITE
OVHD	OVERHEAD
PC	PORTLAND CEMENT
P.C.F.	POUNDS PER CUBIC FOOT
PDA	POWER DRIVEN ANCHOR
PERF	PERFORATED
PH	PLATE HEIGHT
PL	PLATE
P/L	PROPERTY LINE
PLAM	PLASTIC LAMINATE
PLAS	PLASTER/ PLASTIC
PLF	POUNDS PER LINEAL FOOT
PLYWD	PLYWOOD
P.O.C.	POINT OF CONTACT
PR	PAIR
PROP	PROPERTY
PSF	POUNDS PER SQUARE FOOT
PSI	POUNDS PER SQUARE INCH
PT	POINT
PTDF	PRESSURE TREATED DOUGLAS FIR
PTN	PARTITION
PTR	PAPER TOWEL RECEPTACLE
PVC	POLYVINYL CHLORIDE
PVMT	PAVEMENT
R	RISER
R / RAD	RADIUS
RD	ROOF DRAIN
REF	REFERENCE
REFR	REFRIGERATOR
REG	REGULAR
REQD	REQUIRED
REINF	REINFORCED
RH	ROOF HATCH
RHMS	ROUND HEAD MACHINE SCREW
RHWS	ROUND HEAD WOOD SCREW
RM	ROOM
RO	ROUGH OPENING
RWL	RAIN WATER LEADER
RWD	REDWOOD

S	SOUTH
S.A.D.	SEE ARCHITECTURAL DRAWINGS
S.AV.D.	SEE AUDIOVIDEO DRAWINGS
SC	SOLID CORE
S.C.D.	SEE CIVIL DRAWINGS
SCHED	SCHEDULE
SD	STORM DRAIN
SECT	SECTION
S.E.D.	SEE ELECTRICAL DRAWINGS
SEP	SEPARATION
S.F.PD.	SEE FIRE PROTECTION DRAWINGS
SHTG	SHEATHING
SIM	SIMILAR
SL	SLIDING
S.L.D.	SEE LANDSCAPE DRAWINGS
SM	SHEET METAL
S.M.D.	SEE MECHANICAL DRAWING
SOV	SHUT OFF VALVE
S.P.D.	SEE PLUMBING DRAWINGS
SPEC	SPECIFICATION
SPKR	SPEAKER
SQ	SQUARE
SS	STAINLESS STEEL
S.S.D.	SEE STRUCTURAL DRAWINGS
S.TH.D.	SEE THEATER DRAWINGS
STA	STATION
STD	STANDARD
STL	STEEL
STOR	STORAGE
STRUCT	STRUCTURAL
SUSP	SUSPENDED
SYM	SYMMETRICAL
T	TREAD
T&B	TOP & BOTTOM
TC	TOP OF CURB
TEL	TELEPHONE
TER	TERRAZZO
T&G	TONGUE & GROOVE
TH	THICK
THRU	THROUGH
TJ	TOOL JOINT
TN	TOE NAIL
T.O.D.	TOP OF DECK
T.O.P.	TOP OF PLATE
T.O.R.	TOP OF ROOF
T.O.W.	TOP OF WALL
T.P.	TOP OF PAVEMENT
TRN	TRANSOM
TRANS	TRANSPARENT
TS	TUBE STEEL
TUB	TUBULAR
TV	TELEVISION
TW	TACKWALL
TYP	TYPICAL
UNF	UNFINISHED
U.O.N.	UNLESS OTHERWISE NOTED
UR	URINAL
UTIL	UTILITY
VB	VAPOR BARRIER
VCT	VINYL COMPOSITION TILE
VERT	VERTICAL
VEST	VESTIBULE
V.I.F.	VERIFY IN FIELD
VTR	VENT THROUGH ROOF
VWC	VINYL WALL COVERING
W	WEST
W/	WITH
WC	WATER CLOSET
WD	WOOD
WDW	WINDOW
WH	WATER HEATER
W/O	WITHOUT
WP	WATER PROOF
W.P.	WORK POINT
WR	WATER RESISTANT
WSCT	WAINSCOT
WT	WEIGHT
YD	YARD

LEGEND

ALL NOTES AND SYMBOLS ARE INTENDED TO APPLY AT ALL OTHER LOCATIONS OF SIMILAR GRAPHIC REPRESENTATION. SUCH INDICATIONS MAY BE LIMITED TO PROMOTE CLARITY. NO LIMITATION OF APPLICATION IS INTENDED EXCEPT AS SPECFICALLY NOTED.

Symbol	Description
AA / A1	COLUMN GRIDS A AND 1 IN BUILDING A
6'-0"	DIMENSION TO FACE OF STUD OR MASONRY
6'-0"	DIMENSION TO FACE OF FINISH
6'-0"	DIMENSION TO CENTER LINE OR COLUMN LINE
12'-0"	RELATIVE ELEVATION DIMENSION
B101A	DOOR A IN ROOM NUMBER 101 IN BUILDING B ACCESSIBLE CLEARANCES SHOWN DASHED SEE 2/A-8.1
W03	WINDOW NUMBER 03
11 / A-9.12	DETAIL NUMBER 11 ON SHEET NUMBER A-9.12
3 / A-B6.2	SECTION NUMBER 3 ON SHEET NUMBER A-B6.2
2 / A-B5.3	ELEVATION NUMBER 2 ON SHEET NUMBER A-B5.3
FLOOR PLAN: CLASSROOM / A204 / F-4 / A-A7.6	ROOM NAME / ROOM NUMBER 204 IN BUILDING A / FLOOR FINISH CODE F-4 / INTERIOR ELEVATION SHOWN ON SHEET A-A7.6
REFLECTED CLG PLAN: CLASSROOM / A204 / CL-6 / 10'-0"	ROOM NAME / ROOM NUMBER 204 IN BUILDING A / CEILING FINISH CODE CL-6 / FINISH CEILING HEIGHT 10'-0"
33	KEYNOTE NUMBER 33
8	METAL WALL FRAMING SIZE 8"
50	WALL ACOUSTIC RATING OF STC 50
C	TOILET ACCESSORY C
222	ARCHITECTURAL WOODWORK STANDARDS (AWS) CABINET DESIGN SERIES IDENTIFIER
W-2	FINISH CODE, WALL FINISH 2 SHOWN
E1	ROOM / BUILDING ACCESSIBLE SIGNAGE TYPE E1. SEE ARCHITECTURAL GRAPHICS PLAN AND ACCESSIBLE SIGNAGE DETAIL
L01	ARCHITECTURAL LOUVER TYPE L01, SEE ELEVATIONS AND LOUVER SCHEDULE. DOOR LOUVERS ARE NOT TAGGED, SEE DOOR SCHEDULE.
W.P.	RELATIVE ORIGIN OR WORK POINT
A	EQUIPMENT TAG REFER TO EQUIPMENT SCHEDULE

PROJECT DESCRIPTON

NEW 2-STORY CLASSROOM BUILDING WITH STANDARD AND SPECIAL DAY CLASSROOMS, STAFF BREAK ROOM AND FLEXIBLE OFFICE SPACE.

NEW SINGLE-STORY SCIENCE BUILDINGS WITH TWO LABS, SHARED PREP ROOM, MULTI-STALL RESTROOMS, AND UTILITY AND MAINTAINENCE PROGRAM.

DSA CERTIFICATION OF THE CURRENT PROJECT 01-119994 IS CONTIGENT UPON THE CERTIFICATION OF THE DSA APP# 01-119033

DEFERRED APPROVALS

1. ALL STOREFRONT AND CURTAINWALL ASSEMBLIES
2. HYDRAULIC ELEVATOR IN 2-STORY CLASSROOM BUILDING.

Statement of General Conformance

BY ARCHITECT UTILIZING PLANS (INCLUDING BUT NOT LIMITED TO SHOP DRAWINGS) PREPARED BY OTHER LICENSED DESIGN PROFESSIONALS AND/OR CONSULTANTS

DSA Application No 01-119994 File No 7-H4

These drawings (marked Civil, Landscape, Structural, Mechanical, Plumbing, Fire Protection, Electrical, and Fire Alarm) and/or specifications and/or calculations for the items listed, have been prepared by other design professionals or consultants who are licensed and/or authorized to prepare such drawings in this state. It has been examined by me for:

1) design intent and appears to meet the appropriate requirements of Title 24, California Code of Regulations and the project specifications prepared by me, and

2) coordination with my plans and specifications and is acceptable for incorporation into the construction of this project.

The Statement of General Conformance "shall not be construed as relieving me of my rights, duties, and responsibilities under Sections 17302 and 81138 of the Education Code and Sections 4-336, 4-341, and 4-344" of Title 24, Part I. (Title 24, Part 1, Section 4-317 (b))

Signature: [signature] Date: 7/27/2022

Architect or Engineer designated to be in general responsible charge

Print Name	License Number	Expiration Date
Jim Theiss	C22643	June 30, 2023

GENERAL NOTES

1. ALL WORK IS SHOWN, DESCRIBED OR SPECIFIED IN THE DRAWINGS INDEXED ON THIS PAGE OR IN THE SPECIFICATIONS.

   ALL WORK NOT INDICATED AS EXISTING (E) IS NEW.

2. ALL FRAMING DIMENSIONS ARE TO FACE OF STUD UNLESS NOTED OTHERWISE.
   ●DO NOT SCALE DRAWINGS.
   ●VERIFY ALL DIMENSIONS WHERE WORK INVOLVES FRAMING FOR WINDOWS, DOORS, OR CABINETS.

3. ONLY WORK SO NOTED IS NOT IN CONTRACT (N.I.C.) ALL N.I.C. ITEMS ARE NOT PART OF DSA APPROVAL

4. GOVERNING CODES: A COPY OF TITLE 24 PARTS 1-5 SHALL BE KEPT ON THE JOB AT ALL TIMES.
   CALIFORNIA CODE OF REGULATIONS TITLE 24 BUILDING STANDARDS CODE:
   - PART 1 2019 CALIFORNIA ADMINISTRATIVE CODE (CAC), PART 1, TITLE 24 CCR AND 2021 SUPPLEMENT
   - PART 2 2019 CALIFORNIA BUILDING CODE (CBC), PART 2, TITLE 24 CCR (2018 INTERNATIONAL BUILDING CODE, VOL. 1 & 2, 2019 CALIFORNIA AMENDMENTS, AND 2021 SUPPLEMENT)
   - PART 3 2019 CALIFORNIA ELECTRICAL CODE (CEC), PART 3, TITLE 24 CCR (2017 NATIONAL ELECTRICAL CODE, 2019 CALIFORNIA AMENDMENTS, AND 2021 SUPPLEMENT)
   - PART 4 2019 CALIFORNIA MECHANICAL CODE (CMC), PART 4, TITLE 24 CCR (2018 IAPMO UNIFORM MECHANICAL CODE, 2019 CALIFORNIA AMENDMENTS,AND 2021 SUPPLEMENT)
   - PART 5 2019 CALIFORNIA PLUMBING CODE (CPC), PART 5, TITLE 24 CCR (2018 IAPMO UNIFORM PLUMBING CODE, 2019 CALIFORNIA AMENDMENTS, AND 2021 SUPPLEMENT)
   - PART 6 2019 CALIFORNIA ENERGY CODE (CEC), PART 6, TITLE 24 CCR
   - PART 9 2019 CALIFORNIA FIRE CODE (CFC), PART 9, TITLE 24 CCR (2018 INTERNATIONAL FIRE CODE, 2019 CALIFORNIA AMENDMENTS, AND 2021 SUPPLEMENT)
   - PART 10 2019 CALIFORNIA EXISTING BUILDING CODE (CEBC), PART 10, TITLE 24 CCR (2018 INTERNATIONAL EXISTING BUILDING CODE, 2019 CALIFORNIA AMENDMENTS, AND 2021 SUPPLEMENT)
   - PART 11 2019 CALIFORNIA GREEN BUILDING STANDARDS CODE (CAL-GREEN), PART 11, TITLE 24 CCR, AND 2021 SUPPLEMENT
   - PART 12 2019 CALIFORNIA REFERENCED STANDARDS CODE, PART 12, TITLE 24 CCR

   TITLE 19 CCR, PUBLIC SAFETY CODE, STATE FIRE MARSHAL REGULATIONS
   2010 ADA STANDARDS FOR ACCESSIBILITY DESIGN
   2016 ASME A17.1-16/CSA B44-16 SAFETY CODE FOR ELEVATORS AND ESCALATORS
   NOTE: CAL/OSHA ELEVATOR UNIT ENFORCES CCR TITLE 8 AN USES THE 2004 ASME 17.1 BY ADOPTION

5. STANDARD AND GUIDES:

NFPA 13	INSTALLATION OF FIRE SPRINKLER SYSTEMS (CA AMENDED)	2016 EDITION
NFPA 14	INSTALLATION OF STANDPIPE AND HOSE SYSTEMS	2016 EDITION
NFPA 17	DRY CHEMICAL EXTINGUISHING SYSTEMS	2017 EDITION
NFPA 17A	WET CHEMICAL FIRE EXTINGUISHING SYSTEMS	2017 EDITION
NFPA 20	INSTALLATION OF STATIONARY PUMPS FOR FIRE PROTECTION	2016 EDITION
NFPA 24	STANDARD FOR THE INSTALLATION OF PRIVATE FIRE SERVICE MAINS AND THEIR APPURTENANCES	2016 EDITION
NFPA 25	CALIFORNIA EDITION - TESTING, MAINTENANCE OF WATER-BASED FIRE PROTECTION SYSTEMS	2013 EDITION
NFPA 72	NATIONAL FIRE ALARM AND SIGNALING CODE (CA AMENDED)	2016 EDITION
NFPA 80	STANDARD FOR FIRE DOORS AND OTHER OPENING PROTECTIVES	2016 EDITION
NFPA 110	EMERGENCY AND STANDBY POWER SYSTEMS	2016 EDITION
NFPA 170	STANDARD FOR FIRE SAFETY AND EMERGENCY SYMBOLS	2018 EDITION
NFPA 2001	STANDARD ON CLEAN AGENT FIRE EXTINGUISHING SYSTEMS	2015 EDITION
UL 300	STANDARD FOR FIRE TESTING OF FIRE EXTINGUISHING SYSTEMS FOR PROTECTION OF COMMERCIAL COOKING EQUIPMENT	2005 (R2010)
UL 464	AUDIBLE SIGNALING DEVICES FOR FIRE ALARM AND SIGNALING SYSTEMS, INCLUDING ACCESSORIES	2003 EDITION
UL 521	STANDARD FOR HEAT DETECTORS FOR FIRE PROTECTIVE SIGNALING SYSTEMS	1999 EDITION
UL 1971	STANDARD FOR SIGNALING DEVICES FOR THE HEARING IMPAIRED	2002 EDITION
UL 2034	STANDARD FOR SINGLE AND MULTIPLE CARBON MONOXIDE ALARMS	2017 EDITION
ICC 300	STANDARD FOR BLEACHERS, FOLDING AND TELESCOPIC SEATING, AND GRANDSTANDS	2017 EDITION

6. IN ACCORDANCE WITH TITLE 24 PART 1 CHAPTER 4: THE ADMINISTRATIVE REGULATIONS FOR THE DIVISION OF THE STATE ARCHITECT STRUCTURAL SAFETY (DSA/SS)
   ●4-331 DSA SHALL BE NOTIFIED AT THE START OF CONSTRUCTION.
   ●4-332 WHEN CONSTRUCTION IS SUSPENDED FOR MORE THAN ONE MONTH, THE PROJECT INSPECTOR SHALL INFORM DSA.
   ●4-333(a) OBSERVATION OF THE WORK SHALL BE BY ARCHITECT OR REGISTERED ENGINEER.
   ●4-333(b) THE DISTRICT MUST PROVIDE AND PAY FOR PROJECT INSPECTOR.
   ●4-334 SUPERVISION OF CONSTRUCTION BY DSA SHALL BE IN ACCORDANCE WITH THIS SECTION.
   ●4-335 STRUCTURAL TESTS AND INSPECTION ARE REQUIRED IN ACCORDANCE WITH THIS SECTION. TESTS OF MATERIALS AND TESTING LAB SHALL BE IN ACCORDANCE WITH SECTION 4-335 AND THE DISTRICT SHALL EMPLOY AND PAY THE LAB. COSTS OF RE-TEST MAY BE BACKCHARGED TO THE CONTRACTOR. ALL TESTS SHALL CONFORM TO THE REQUIREMENTS OF SECTION 4-335 AND APPROVED T & I SHEET (DSA-103)
   ●4-336 VERIFIED REPORTS SHALL BE SUBMITTED BY CONTRACTORS (DSA 006-C), INSPECTORS (DSA 006-PI), ARCHITECTS AND ENGINEERS (DSA 006-AE) IN ACCORDANCE WITH SECTIONS 4-336 AND 4-343.
   ●4-337 SEMI-MONTHLY REPORTS SHALL BE SUBMITTED BY INSPECTORS (DSA - 155), IN ACCORDANCE WITH SECTIONS 4-337.
   ●4-338 WORK SHALL BE EXECUTED IN ACCORDANCE WITH THE APPROVED PLANS, ADDENDA AND CONSTRUCTION DOCUMENTS. CHANGES IN THE APPROVED PLANS AND SPECIFICATIONS SHALL BE MADE BY ADDENDA OR CONSTRUCTION CHANGE DOCUMENTS STAMPED AND SIGNED BY THE ARCHITECT OR REGISTERED ENGINEER IN CHARGE. ADDENDA AND CHANGE DOCUMENTS SHALL BE SUBMITTED TO AND APPROVED BY DSA PRIOR TO COMMENCEMENT OF WORK.
   ● 4-341(a) THE ARCHITECT AND THE REGISTERED ENGINEER SHALL PERFORM THEIR DUTIES IN ACCORDANCE WITH SECTIONS 4-333(a) AND 4-341.
   ● 4-341(d) INSPECTOR SHALL BE APPROVED BY DSA.
   ● 4-342 INSPECTION SHALL BE IN ACCORDANCE WITH SECTION 4-333 THE DUTY OF THE INSPECTOR SHALL BE IN ACCORDANCE WITH THIS SECTION.
   ●.4-343 THE CONTRACTOR SHALL PERFORM HIS DUTIES IN ACCORDANCE WITH THIS SECTION.

7. THE INTENT OF THE DRAWINGS AND SPECIFICATIONS IS THAT THE WORK OF ALTERATION, REHABILITATION OR RECONSTRUCTION IS TO BE IN ACCORDANCE WITH TITLE 24, C.C.R. SHOULD ANY EXISTING CONDITIONS BE DISCOVERED WHICH ARE NOT COVERED BY THE CONTRACT DOCUMENTS WHEREIN THE FINISHED WORK WILL NOT COMPLY WITH SAID TITLE 24 C.C.R. A CONSTRUCTION CHANGE DOCUMENT DETAILING AND SPECIFYING THE REQUIRED REPAIR WORK SHALL BE SUBMITTED TO AND APPROVED BY DSA BEFORE PROCEEDING WITH THE REPAIR WORK. (TITLE 24 PART 1, SECTION 4-338(c))

8. COMPLIANCE WITH CFC CHAPTER 33, FIRE SAFETY DURING CONSTRUCTION AND DEMOLITION AND CBC CHAPTER 33, SAFETY DURING CONSTRUCTION SHALL BE ENFORCED.

9. EMERGENCY VEHICLE ACCESS ROADS AND ON-SITE FIRE HYDRANTS SHALL BE IN SERVICE AND OPERABLE PRIOR TO LOADING THE SITE WITH COMBUSTIBLE MATERIALS.

10. GRADING PLANS, DRAINAGE IMPROVEMENTS, ROAD AND ACCESS REQUIREMENTS, AND ENVIRONMENTAL HEALTH CONSIDERATIONS SHALL COMPLY WITH APPLICABLE LOCAL ORDINANCES.

11. FABRICATION AND INSTALLATION OF DEFERRED SUBMITTAL ITEMS SHALL NOT BE STARTED UNTIL CONTRACTOR'S DRAWINGS, SPECIFICATIONS, AND ENGINEERING CALCULATIONS FOR THE ACTUAL SYSTEMS TO BE INSTALLED HAVE BEEN ACCEPTED AND SIGNED BY THE ARCHITECT OR STRUCTURAL ENGINEER AND APPROVED BY THE DSA.

VICINITY MAP

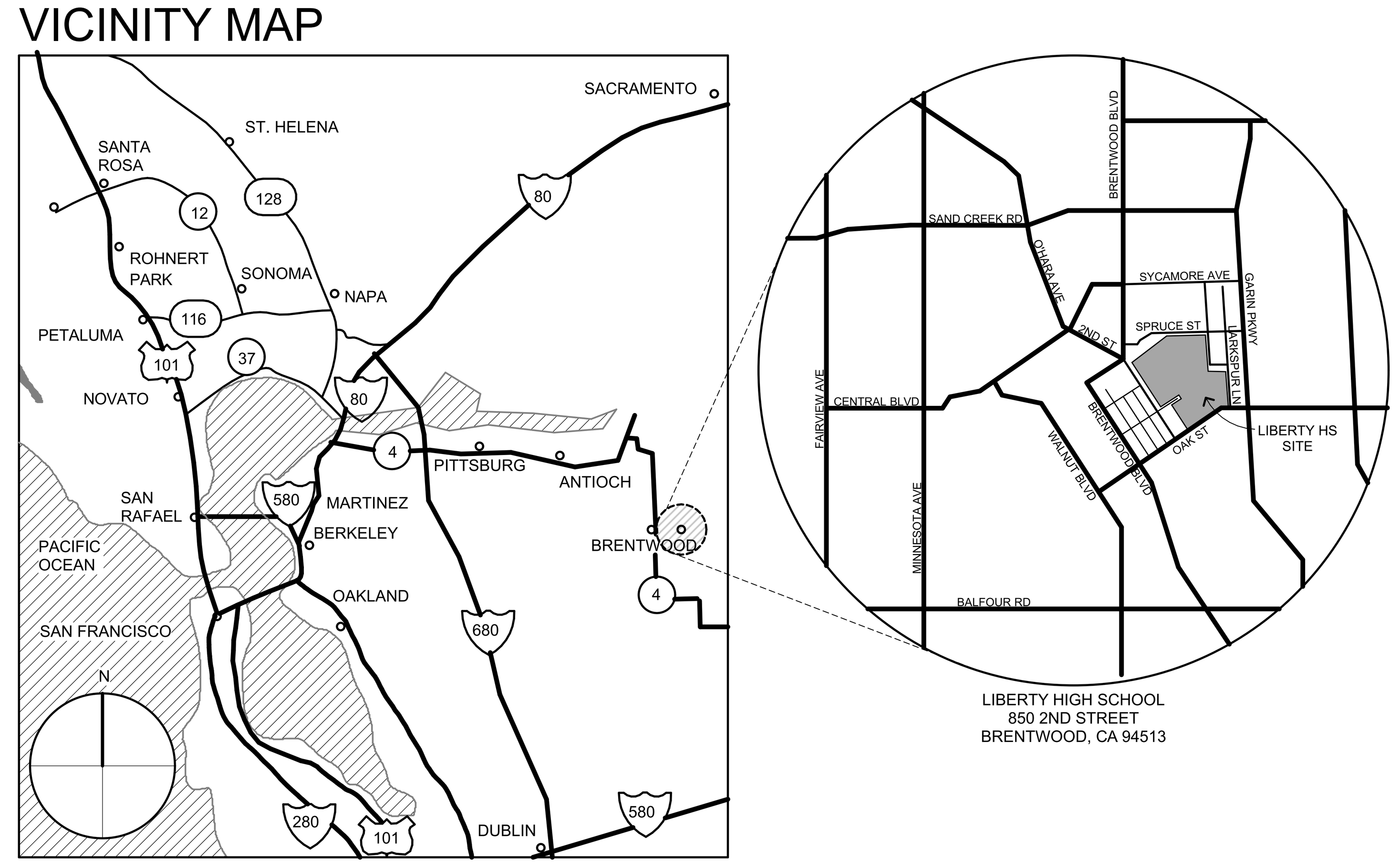

LIBERTY HIGH SCHOOL
850 2ND STREET
BRENTWOOD, CA 94513

SHEET INDEX

SHEET COUNT: 192

GENERAL
G-0.1 COVER SHEET
G-0.2 ABBREVIATIONS AND NOTES
G-0.3 ACCESS AND CAMPUS SITE PLAN
G-0.4 FIRST FLOOR CODE ANALYSIS AND EXITING PLAN
G-0.5 SECOND FLOOR CODE ANALYSIS AND EXITING PLAN

CIVIL
C-1.0 EXISTING CONDITIONS / DEMOLITION
C-2.0 HORIZONTAL CONTROL PLAN
C-2.1 DETAILS
C-3.0 UTILITY PLAN
C-4.0 GRADING PLAN
C-5.0 STORMWATER CONTROL PLAN
C-6.0 EROSION CONTROL PLAN

LANDSCAPE
L1.0 MATERIAL AND DETAIL REFERENCE PLAN
L1.1 CONSTRUCTION DETAILS
L1.2 CONSTRUCTION DETAILS
L2.0 LAYOUT PLAN
L3.0 IRRIGATION PLAN
L3.1 IRRIGATION LEGEND & NOTES
L3.2 IRRIGATION DETAILS
L3.3 IRRIGATION DETAILS
L3.4 IRRIGATION DETAILS
L3.5 IRRIGATION DETAILS AND SCHEDULES
L4.0 PLANTING PLAN
L4.1 PLANTING DETAILS AND NOTES

ARCHITECTURAL
A-1.1 SITE PLAN
A-1.2 SITE DETAILS
A-A2.1 BLDG A - FIRST FLOOR PLAN
A-A2.2 BLDG A - FIRST FLOOR DIMENSION PLAN
A-A2.3 BLDG A - FIRST FLOOR FINISH PLAN
A-A2.4 BLDG A - SECOND FLOOR PLAN
A-A2.5 BLDG A - SECOND FLOOR DIMENSION PLAN
A-A2.6 BLDG A - SECOND FLOOR FINISH PLAN
A-A3.1 BLDG A - FIRST FLOOR REFLECTED CEILING PLAN
A-A3.2 BLDG A - SECOND FLOOR REFLECTED CEILING PLAN
A-A4.1 BLDG A - ROOF PLAN
A-A5.1 BLDG A - EXTERIOR ELEVATIONS
A-A6.1 BLDG A - BUILDING SECTIONS
A-A6.2 BLDG A - WALL SECTIONS
A-A6.3 BLDG A - WALL SECTIONS
A-A6.4 BLDG A - ENLARGED STAIR PLANS AND ELEVATIONS
A-A7.1 BLDG A - INTERIOR ELEVATIONS
A-A7.2 BLDG A - INTERIOR ELEVATIONS
A-A7.3 BLDG A - INTERIOR ELEVATIONS
A-A7.4 BLDG A - INTERIOR ELEVATIONS
A-A7.5 BLDG A - INTERIOR ELEVATIONS
A-A7.6 BLDG A - INTERIOR ELEVATIONS
A-A7.7 BLDG A - INTERIOR ELEVATIONS
A-A7.8 BLDG A - INTERIOR ELEVATIONS
A-A7.9 BLDG A - INTERIOR ELEVATIONS
A-A7.10 BLDG A - RESTROOM PLANS AND INTERIOR ELEVATIONS
A-B2.1 BLDG B - FLOOR PLAN
A-B2.2 BLDG B - DIMENSION PLAN
A-B2.3 BLDG B - FINISH PLAN
A-B3.1 BLDG B - REFLECTED CEILING PLAN
A-B3.2 BLDG B - CLERESTORY PLAN
A-B4.1 BLDG B - ROOF PLAN
A-B5.1 BLDG B - EXTERIOR ELEVATIONS
A-B6.1 BLDG B - BUILDING SECTIONS
A-B6.2 WALL SECTIONS
A-B6.3 WALL SECTIONS
A-B6.4 WALL SECTIONS
A-B7.1 INTERIOR ELEVATIONS
A-B7.2 INTERIOR ELEVATIONS
A-B7.3 ENLARGED RESTROOM PLANS & INTERIOR ELEVATIONS
A-8.1 DOOR SCHEDULE AND SIGNAGE
A-8.2 WINDOW SCHEDULE
A-8.3 FINISH SCHEDULE
A-9.1 WALL DETAILS METAL FRAMED
A-9.2 WALL DETAILS WOOD FRAMED
A-9.3 FRAMING DETAILS
A-9.4 OPENING DETAILS
A-9.5 ROOF DETAILS
A-9.6 ROOF DETAILS
A-9.7 CANOPY AND HATCH DETAILS
A-9.8 GUTTER AND RWL DETAILS
A-9.9 ELEVATOR, LIFT AND STAIRS DETAILS
A-10.1 CEILING DETAILS WD
A-10.2 CEILING DETAILS CONC AND METAL
A-10.3 INTERIOR DETAILS
A-10.4 CASEWORK DETAILS
A-10.5 CASEWORK DETAILS

AG-A2.1 BLDG A - FIRST FLOOR SIGNAGE PLAN
AG-A2.2 BLDG A - SECOND FLOOR SIGNAGE PLAN
AG-B2.1 BLDG B - SIGNAGE PLAN

STRUCTURAL
S0.1 GENERAL NOTES
S1.1 TYPICAL CONCRETE DETAILS
S1.2 TYPICAL WOOD DETAILS
S1.3 TYPICAL WOOD DETAILS
S1.4 TYPICAL METAL DECKING DETAILS
S1.5 TYPICAL METAL DECKING DETAILS
S1.6 TYPICAL CFS ELEVATION AND CONNECTION DETAILS
S1.7 TYPICAL CFS DETAILS
S-A2.1 FOUNDATION PLAN - BLDG A
S-A2.2 SECOND FLOOR FRAMING PLAN - BLDG A
S-A2.3 ROOF FRAMING PLAN - BLDG A
S-A3.1 FRAMING ELEVATIONS
S-A3.2 CFS ELEVATIONS - BLDG A
S-A4.1 FOUNDATION DETAILS
S-A5.1 STEEL FRAMING DETAILS
S-A5.2 STEEL FRAMING DETAILS
S-A5.3 STEEL SPECIAL MOMENT FRAME (WUF-W) DETAILS
S-A5.4 STEEL STAIR AND RAIN CANOPY DETAILS
S-B2.1 FOUNDATION PLAN - BLDG B
S-B2.2 ROOF FRAMING PLAN - BLDG B
S-B3.1 ELEVATIONS & SCHEDULES
S-B4.1 FOUNDATION DETAILS
S-B6.1 WOOD DETAILS
S-B6.2 WOOD DETAILS

MECHANICAL
M-1.1 MECHANICAL SHEDULES & LEGENDS
M-A2.1 BLDG A - FIRST FLOOR MECHANICAL PLAN
M-A2.2 BLDG A - SECOND FLOOR MECHANICAL PLAN
M-A2.3 BLDG A - ROOF MECHANICAL PLAN
M-B2.1 BLDG B - FIRST FLOOR MECHANICAL PLAN
M-B2.2 BLDG B - ROOF MECHANICAL PLAN
M-3.1 MECHANICAL DETAILS
M-3.2 MECHANICAL DETAILS
M-3.3 MECHANICAL DETAILS
M-3.4 MECHANICAL DETAILS
M-4.1 CONTROL DIAGRAMS
M-4.2 CONTROL DIAGRAMS

PLUMBING
P-1.1 PLUMBING SCHEDULES & LEGENDS
P-A2.1 BLDG A PLUMBING FIRST FLOOR WASTE AND VENT PLAN
P-A2.2 BLDG A PLUMBING FIRST FLOOR WATER AND GAS PLAN
P-A2.3 BLDG A PLUMBING SECOND FLOOR WASTE AND VENT PLAN
P-A2.4 BLDG A PLUMBING SECOND FLOOR WATER AND GAS PLAN
P-A2.5 BLDG A PLUMBING ROOF PLAN
P-A2.6 BLDG A PLUMBING ENLARGEMENTS
P-A2.7 BLDG A PLUMBING ENLARGEMENTS
P-B2.1 BLDG B PLUMBING ENLARGEMENTS
P-B2.2 BLDG B PLUMBING ENLARGEMENTS
P-B2.3 BLDG B PLUMBING ROOF PLAN
P-3.1 PLUMBING DETAILS
P-3.2 PLUMBING DETAILS
P-3.3 PLUMBING DETAILS

FIRE PROTECTION
FP-0.1 SYMBOL LEGENDS, ABBREVIATIONS, NOTES - FIRE PROTECTION
FP-1.1 SITE PLAN - FIRE PROTECTION
FP-A2.1 BLDG A FIRST FLOOR PIPING PLAN - FIRE PROTECTION
FP-A2.2 BLDG A SECOND FLOOR PIPING PLAN - FIRE PROTECTION
FP-A3.1 BLDG A FIRST FLOOR CEILING PLAN - FIRE PROTECTION
FP-A3.2 BLDG A SECOND FLOOR CEILING PLAN - FIRE PROTECTION
FP-A4.1 BLDG A SECTIONS - FIRE PROTECTION
FP-B2.1 BLDG B PIPING PLAN - FIRE PROTECTION
FP-B3.1 BLDG B CEILING PLAN - FIRE PROTECTION
FP-B4.1 BLDG B SECTIONS - FIRE PROTECTION
FP-6.1 DETAILS - FIRE PROTECTION
FP-6.2 DETAILS - FIRE PROTECTION
FP-6.3 BRACING CALCULATIONS AND DETAILS - FIRE PROTECTION

ELECTRICAL
E-0.1 GENERAL NOTES & LIST OF DRAWINGS
E-0.2 ELECTRICAL SYMBOLS LIST & LUMINAIRE SCHEDULE
E-1.0 SITE PLAN OVERALL ELECTRICAL
E-1.1 SITE PLAN ELECTRICAL
E-1.2 SITE PLAN LIGHTING
E-A2.1 FIRST FLOOR PLAN BLDG A - LIGHTING
E-A2.2 SECOND FLOOR PLAN BLDG A - LIGHTING
E-B2.1 FLOOR PLAN BLDG B - LIGHTING
E-A3.1 FIRST FLOOR PLAN BLDG A - POWER & SIGNAL
E-A3.2 SECOND FLOOR PLAN BLDG A - POWER & SIGNAL
E-B3.1 FLOOR PLAN BLDG B - POWER & SIGNAL
E-A4.1 FIRST FLOOR PLAN BLDG A MECH/PLUMB CONNECTIONS
E-A4.2 SECOND FLOOR PLAN BLDG A MECH/PLUMB CONNECTIONS
E-A4.3 ROOF PLAN BLDG A MECH/PLUMB CONNECTIONS
E-B4.1 FLOOR PLAN BLDG B MECH/PLUMB CONNECTIONS
E-B4.2 ROOF PLAN BLDG B MECH/PLUMB CONNECTIONS
E-5.1 SINGLE LINE DIAGRAMS
E-5.2 SINGLE LINE DIAGRAMS
E-5.3 SINGLE LINE DIAGRAMS
E-5.4 SINGLE LINE DIAGRAMS
E-6.1 PANEL SCHEDULES
E-7.1 DETAILS
E-7.2 DETAILS
E-7.3 DETAILS
E-7.4 DETAILS
E-7.5 DETAILS

FIRE ALARM
FE-0.1 FIRE ALARM EQUIPMENT LIST, GENERAL NOTES, & DETAILS
FE-1.1 SITE PLAN - FIRE ALARM
FE-A-3.1 FIRST FLOOR PLAN BLDG A - FIRE ALARM
FE-A-3.2 SECOND FLOOR PLAN BLDG A - FIRE ALARM
FE-B-3.1 FIRST FLOOR PLAN BLDG B - FIRE ALARM
FE-5.1 FIRE ALARM RISER DIAGRAM
FE-6.1 FIRE ALARM CALCULATIONS

ELEVATOR
VT-1.0 ELEVATOR DETAILS

CATHODIC PROTECTION
CP-1.2 CP DETAILS
CP-1.3 CP DETAILS

TITLE-24
T-A1.1 BLDG-A TITLE-24
T-A1.2 BLDG-A TITLE-24
T-A1.3 BLDG-A TITLE-24
T-A1.4 BLDG-A TITLE-24
T-A1.5 BLDG-A TITLE-24

T-B1.1 BLDG-B TITLE-24
T-B1.2 BLDG-B TITLE-24
T-B1.3 BLDG-B TITLE-24
T-B1.4 BLDG-B TITLE-24

IDENTIFICATION STAMP
DIV. OF THE STATE ARCHITECT
APP: 01-119994 INC:
REVIEWED FOR
SS ☑ FLS ☑ ACS ☑
DATE: 08/16/2022

QUATTROCCHI KWOK ARCHITECTS
Main:
636 Fifth Street, Santa Rosa, CA 95404
East Bay:
55 Harrison Street, Suite 525,
Oakland, CA 94607
(707) 576-0829

LICENSED ARCHITECT
JIM THEISS
LICENSE # C22643
EXP JUNE 30, 2023
STATE OF CALIFORNIA
SIGNED: JUNE 24, 2022

LIBERTY HIGH SCHOOL

NEW CLASSROOM BUILDINGS

850 2ND STREET
BRENTWOOD, CA
94513

LIBERTY UNION
HIGH SCHOOL
DISTRICT

DSA APP NO. 01-119994

ARCH PROJECT NO: 1925.00
DRAWN BY: JDS
DRAWING SCALE: N.T.S.
PTN: 61721-83 FILE NO: 7-H4

CONSTRUCTION DOCUMENTS
JUNE 24, 2022

SHEET TITLE

ABBREVIATIONS AND NOTES

SHEET NUMBER

G-0.2

BIMcloud: archiserver - BIMcloud Basic for ARCHICAD 22/1925.00 Liberty HS Classroom_BLDG A_AC22;7/27/2022;5:27 PM

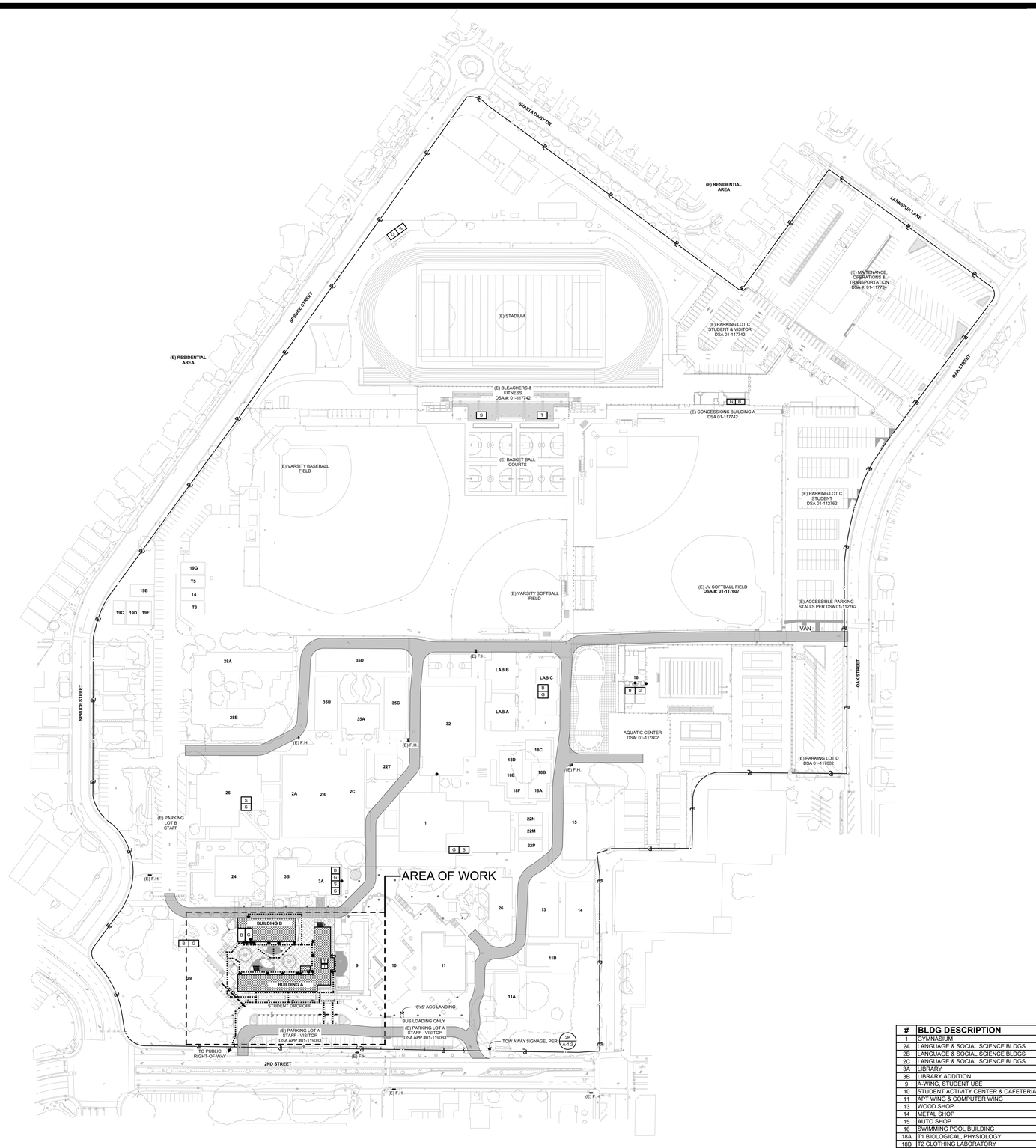

DSA 810

FIRE & LIFE SAFETY SITE CONDITIONS SUBMITTAL

Division of the State Architect (DSA) documents referenced within this publication are available on the DSA Forms or DSA Publications webpages.

To facilitate the Division of the State Architect's (DSA) fire and life safety plan review of project site conditions, DSA requires the design professional to provide the following information at time of project submittal for projects consisting of construction of a new campus, construction of new building(s), additions to existing buildings, and for site alternate design means for fire department emergency vehicle access, and fire suppression water supply.

Information associated with compliance items 1 through 3 below is to be provided for all project types indicated above. Information associated with items 4 through 7 is to be completed when an alternate means is utilized. Acknowledgement by the school district and signature from the Local Fire Authority (LFA) is only required when an alternate design means is being requested.

The Project Information and Fire & Life Safety Information sections are to be completed for all projects and imaged onto the fire access site plan. When an alternate design/means is proposed, all sections on pages 1 and 2 are to be completed and imaged on the fire access site plan.

For additional information refer to the instructions at the end of this form and DSA Policy *PL 09-01: Fire Flow for Buildings*.

PROJECT INFORMATION	
School District/Owner:	Liberty Union High School District
Project Name/School:	Liberty High School New Classroom Buildings
Project Address:	850 2nd Street, Brentwood, CA 94513

FIRE & LIFE SAFETY INFORMATION				
1.	Has a fire hydrant flow test been performed within the past 12 months? *(If yes, provide a copy of the test data.)*	Yes ☑		No ☐
2.	Was the fire hydrant water flow test performed as part of this LFA review?	Yes ☐		No ☑
3.	Is the project located within a designated fire hazard severity zone (FHSZ) as established by Cal-Fire? *(If yes, indicate FHSZ classification below.)*	Yes ☐		No ☑
	Refer to the following website for FHSZ locations: http://egis.fire.ca.gov/FHSZ/	Moderate ☐	High ☐	Very High ☐
	Wildland Interface Area (WIFA) *(If any designations are checked, project design must meet the requirements of CBC Chapter 7A.)*			WIFA ☐

DSA 810
FIRE & LIFE SAFETY SITE CONDITIONS SUBMITTAL

CONDITION MEANS AND METHODS RESOLUTION		ALTERNATE ACCEPTED			
		Yes	No	N/A	N/R
4.	Emergency vehicle access roadways do not meet CFC requirements.				
4a.	**Acceptable Alternate:** Emergency vehicle and personnel access as proposed by the project architect is acceptable for providing fire suppression and protection of life and property.				
5.	**Fire Hydrants:** Number and spacing does not meet CFC requirements.				
5a.	**Acceptable Alternate:** Number of fire hydrants and spacing as proposed by the project architect is acceptable for fire suppression and protection of life and property.				
6.	**Fire Hydrants:** Water flow and pressure are less than CFC minimum.				
6a.	**Acceptable Alternate:** The available flow and pressure is acceptable for providing fire suppression and protection of life and property.				
7.	Location of fire department connection(s) serving fire sprinkler systems or standpipe systems does not meet CFC requirements.				
7a.	**Acceptable Alternate:** The location of fire department connection serving the fire sprinkler system and/or standpipe system is acceptable for providing fire suppression and protection of life and property.				

School District Acceptance of Acceptable Design Alternates

By signing this form, the school district acknowledges and accepts the proposed design as an alternative to California Building Code (CBC) and California Fire Code (CFC) minimum requirements, as indicated by one or more of the conditions indicated at items 4a, 5a, 6a or 7a, for providing fire and life safety protection of life and property.

Accepted by: _____ Title: _____

Signature: _____ Date: _____

LOCAL FIRE AUTHORITY (LFA) INFORMATION	
LFA Agency Name:	
LFA Review Official:	
Title:	Work Phone:
Work Email:	

LFA Reviewer's Signature: _____ Date: _____

#	BLDG DESCRIPTION	DSA APP. NUMBER
1	GYMNASIUM	30513
2A	LANGUAGE & SOCIAL SCIENCE BLDGS	25083
2B	LANGUAGE & SOCIAL SCIENCE BLDGS	25083
2C	LANGUAGE & SOCIAL SCIENCE BLDGS	25083
3A	LIBRARY	25083
3B	LIBRARY ADDITION	53065
9	A-WING, STUDENT USE	01-119033
10	STUDENT ACTIVITY CENTER & CAFETERIA	01-119033
11	APT WING & COMPUTER WING	25083 & 54083
13	WOOD SHOP	14565
14	METAL SHOP	7354
15	AUTO SHOP	3518 & 25083
16	SWIMMING POOL BUILDING	7894
18A	T1 BIOLOGICAL, PHYSIOLOGY	46363
18B	T2 CLOTHING LABORATORY	46363
18C	T3 COMPUTER LABORATORY	46363
18D	T4 PHYSICAL / EARTH SCIENCE LAB	46363
18E	T5 CHEMISTRY LABORATORY	46363
18F	T6 BIOLOGY	46363
LAB A	SCIENCE LABS	01-114751
LAB B	SCIENCE LABS	01-114751
LAB C	SCIENCE LABS	01-114751
19B	CC8 SPECIAL EDUCATION	47440
19C	CC9 SPECIAL EDUCATION	47440
19D	CC10 SPECIAL EDUCATION	47440
19F	CC12 SPECIAL EDUCATION	47440
19G	CC13 SPEICAL EDUCATION	47440
24	SCIENCE BUILDING	46950
25	COUNTY SPECIAL ED. FACILITY	48347
28A	MATH & SCIENCE CLASSROOMS	53065
28B	MATH & SCIENCE CLASSROOMS	53065
29	PERFORMING ARTS BUILDING	54083
32	JOINT USE GYMNASIUM	01-102471
35A	SCIENCE CLASSROOMS	01-107504
35B	CLASSROOMS	01-107504
35C	CLASSROOMS	01-107504
35D	CLASSROOMS	01-107504
T3	CLASSROOMS	01-114250
T4	CLASSROOMS	01-114250
T5	CLASSROOMS	01-114250

*NRBD = NOT REVIEWED BY DSA

ACCESS SITE PLAN 1
1" = 90'-0"

NORTH

SITE PLAN NOTES

1. IMPERVOUS SUFACES WTHIN 10 FEET OF THE BUILDING FOUNDATION SHALL BE SLOPED NOT LESS THAN 2% AWAY FROM THE BUILDING. SUCH SURFACES SHALL BE PERMITTED TO SLOPE LESS THAN 2% WHERE THE SURFACE IS A DOOR LANDING OR REQUIRED RAMP.
2. SEE SHEET A-1.1 FOR ACCESSIBLE ROUTE (PATH OF TRAVEL) INFORMATION
3. SEE SHEETS G-0.4 AND G-0.5 FOR CODE INFORMATION
4. REFER TO CIVIL ENGINEERING DWGS FOR SIDEWALK GRADES
5. REFER TO CIVIL ENGINEERING DRAWINGS AND LANDSCAPE PLANS FOR SITE FEATURES NOT OTHERWISE INDICATED.
6. REFER TO FIRE PROTECTION DRAWINGS FOR FIRE PROTECTION DESIGN

DESIGN PROFESSIONAL IN GENERAL RESPONSIBLE CHARGE THE ARCHITECT VERIFIES THAT THERE ARE NO BARRIERS IN THE ACCESSIBLE ROUTE SERVING THE AREA OF WORK.
THE ACCESSIBLE ROUTE (PATH OF TRAVEL = P.O.T.) IDENTIFIED IN THESE CONSTRUCTION DOCUMENTS IS COMPLIANT WITH THE CURRENT APPLICABLE CALIFORNIA BUILDING CODE ACCESSIBILITY PROVISIONS FOR PATH OF TRAVEL REQUIREMENTS FOR ALTERATIONS, ADDITIONS AND STRUCTURAL REPAIRS. AS PART OF THE DESIGN OF THIS PROJECT THE P.O.T. WAS EXAMINED:
ANY ELEMENT, COMPONENTS OR PORTIONS OF THE P.O.T. THAT WERE DETERMINED TO BE NONCOMPLIANT HAVE BEEN IDENTIFIED AND THE CORRECTIVE WORK NECESSARY TO BRING THEM INTO COMPLIANCE HAS BEEN INCLUDED WITHIN THE SCOPE OF THIS PROJECT'S WORK THROUGH DETAILS, DRAWINGS AND SPECIFICATIONS INCORPORATED INTO THESE CONSTRUCTION DOCUMENTS.
ANY NONCOMPLIANT ELEMENT, COMPONENT, OR PORTION OF THE P.O.T. THAT WILL NOT BE CORRECTED BY THIS PROJECT BASED ON VALUATION THRESHOLD LIMITATIONS OR A FINDING OF UNREASONABLE HARDSHIP ARE SO INDICATED IN THESE CONSTRUCTION DOCUMENTS.

DURING CONSTRUCTION IF P.O.T. ITEMS WITHIN THE SCOPE OF THE PROJECT REPRESENTED AS CODE-COMPLIANT ARE FOUND TO BE NONCONFORMING BEYOND REASONABLE CONSTRUCTION TOLERANCES, THEY SHALL BE BROUGHT INTO COMPLIANCE WITH THE CBC AS A PART OF THIS PROJECT BY MEANS OF A CONSTRUCTION CHANGE DOCUMENT.
********** INDICATES ACCESSIBLE ROUTE
(ADA 2010 "PATH OF TRAVEL")
THE ACCESSIBLE ROUTE (PATH OF TRAVEL) INDICATED HAS BEEN PROVIDED IN ACCORDANCE WITH IR 11B-10 AND SHALL COMPLY WITH THE FOLLOWING:
- 1:20 MAXIMUM SLOPE WITHOUT A RAMP HANDRAIL
- 1:48 MAXIMUM CROSS SLOPE
- NO ABRUPT VERTICAL CHANGES EXCEEDING 1/4". CHANGES BETWEEN 1/4" TO 1/2" VERTICAL CAN BE AT 1:2 MAX SLOPE. CHANGES LESS THAN 1/4" CAN BE VERTICAL
- 48" MIN. CLEAR IN WIDTH (60" MIN PASSING SPACE EVERY 200 LINEAL FEET)
- NON-SLIP SURFACE -HEAVY BROOM FINISH AT EXTERIOR CONCRETE PAVING WHERE SLOPED >6%, MEDIUM BROOM FINISH AT SLOPES <6%
- MAINTAIN FREE OF OVERHANGING OBSTRUCTIONS TO 80" MIN
- PROTRUDING OBJECTS NOT GREATER THAN 4" SHALL BE MOUNTED BETWEEN 27" AND 80" A.F.F.
- WHERE A DRAIN INLET IS IN THE PATH OF TRAVEL, THE GRATE SHALL BE ORIENTED SO THAT MAX OPENING IS 1/2" & LONG DIM IS PERPENDICULAR TO THE PREDOMINANT DIRECTION OF PEDESTRIAN TRAVEL
- CONTRACTOR TO VERIFY THAT NO BELOW-GRADE PULL BOXES OCCUR WITHIN THE AREA OF TRUNCATED DOMES

PARKING AND PEDESTRIAN SITE SIGNAGE SHALL COMPLY WITH CBC SECTIONS 11B-502.6 11B-502.8 & 11B-703.7.2.1
BUILDING SIGNAGE SHALL COMPLY WITH CBC 11B-703

PEDESTRIAN GATES SHALL COMPLY WITH CBC 1010.2 & 11B-206.5

ACCESS SITE PLAN LEGEND

- NEW BUILDING
- (E) BUILDING TO REMAIN
- 20' EMERGENCY VEHICLE ACCESS
- PROPERTY LINE
- ACCESSIBLE PATH OF TRAVEL
- U — UNISEX RESTROOM
- B — BOYS RESTROOM
- G — GIRLS RESTROOM
- S — STAFF RESTROOM
- ACCESSIBLE HI-LO DRINKING FOUNTAIN
- ELECTRICAL ITEM, S.E.D.
- (E) FIRE HYDRANT

PARKING COUNT

	OVERALL	ACC STALL	ACC VAN STALL	REQUIRED STD	REQUIRED VAN
(E) PARKING LOT A STAFF & VISITOR	58	2	1	2	1
(E) PARKING LOT B STAFF	103	2	3	4	1
(E) PARKING LOT C STUDENT & VISITOR	264	8	8	5	2
(E) PARKING LOT D STUDENT	44	1	1	1	1

CBC 2019 TABLE 11B-208.2:
26-50 TOTAL SPACES = 2 REQ'D ACC SPACES

CBC 2019 SECTION 11B-208.2.4:
FOR EVERY 6 OR FRACTION OF 6 ACC PARKING SPACES REQUIRED, AT LEAST 1 SHALL BE A VAN ACCESSIBLE PARKING SPACE.

IDENTIFICATION STAMP
DIV. OF THE STATE ARCHITECT
APP: 01-119994 INC:
REVIEWED FOR
SS ☑ FLS ☑ ACS ☑
DATE: 08/16/2022

QUATTROCCHI KWOK ARCHITECTS
Main:
636 Fifth Street, Santa Rosa, CA 95404
East Bay:
55 Harrison Street, Suite 525,
Oakland, CA 94607
(707) 576-0829

LICENSED ARCHITECT
JIM THEISS
LICENSE # C22643
EXP JUNE 30, 2023
STATE OF CALIFORNIA

SIGNED: JUNE 24, 2022

LIBERTY HIGH SCHOOL

NEW CLASSROOM BUILDINGS

850 2ND STREET
BRENTWOOD, CA
94513

LIBERTY UNION HIGH SCHOOL DISTRICT

DSA APP NO. 01-119994

ARCH PROJECT NO:	1925.00
DRAWN BY:	JDS
DRAWING SCALE:	1/64" = 1'-0"
PTN: 61721-83	FILE NO: 7-H4

CONSTRUCTION DOCUMENTS

JUNE 24, 2022

SHEET TITLE

ACCESS AND CAMPUS SITE PLAN

SHEET NUMBER

G-0.3

BIMcloud: archiserver - BIMcloud Basic for ARCHICAD 22/1925.00 Liberty HS Classroom, BLDG A, AC22:7/27/2022:5:27 PM

CODE COMPLIANCE SUMMARY *Based on 2019 California Building Code (CBC)* 4/29/2022

BUILDING ID	A	COMPLIES	B	COMPLIES
Program	**CLASSROOM BLDG**		**SCIENCE BLDG**	
Scope	New		New	
OCCUPANCY GROUP- *Sec 303*	E		E	
CONSTRUCTION TYPE- *Sec 601*	II-B		V-B	
AUTOMATIC FIRE SUPPRESSION SYSTEM - *Sec 903.2*	YES		YES	
ALLOWABLE BUILDING HT - *Table 504.3*	55'		40'	
ACTUAL BUILDING HT	30'-0"	OK	23'-7 3/4"	OK
ALLOWABLE NUMBER OF STORIES - *Table 504.4*	2		1	
ACTUAL STORIES	2	OK	1	OK
ALLOWABLE AREA FACTOR (SF) A, - *Table 506.2*	43,500		38,000	
ALLOWABLE AREA W/ FRONTAGE INCREASE - Sec 506.3.3	(Not Needed)		(Not Needed)	
ACTUAL AREA (SF)	17,209	OK	5,119	OK
COMMON PATH OF EGRESS TRAVEL - *Sec 1006*	75'	OK	75'	OK
EXIT ACCESS TRAVEL DISTANCE - *Table 1017.2*	250'	OK	250'	OK
FIRE RESISTANCE RATING FOR BUILDING ELEMENTS - Table	0-Hour	OK	0-HOUR	OK
FIRE RESISTANCE RATING FOR EXTERIOR WALLS BASED ON FIRE SEPARATION DISTANCE - Table 602	10≤X<30 = 0 HR X≥30 = 0 HR	OK	10≤X<30 = 0 HR X≥30 = 0 HR	OK
ALLOWABLE AREAS FOR OPENINGS - *Table 705.8*	UP/S 75%	OK	UP/S 75%	OK

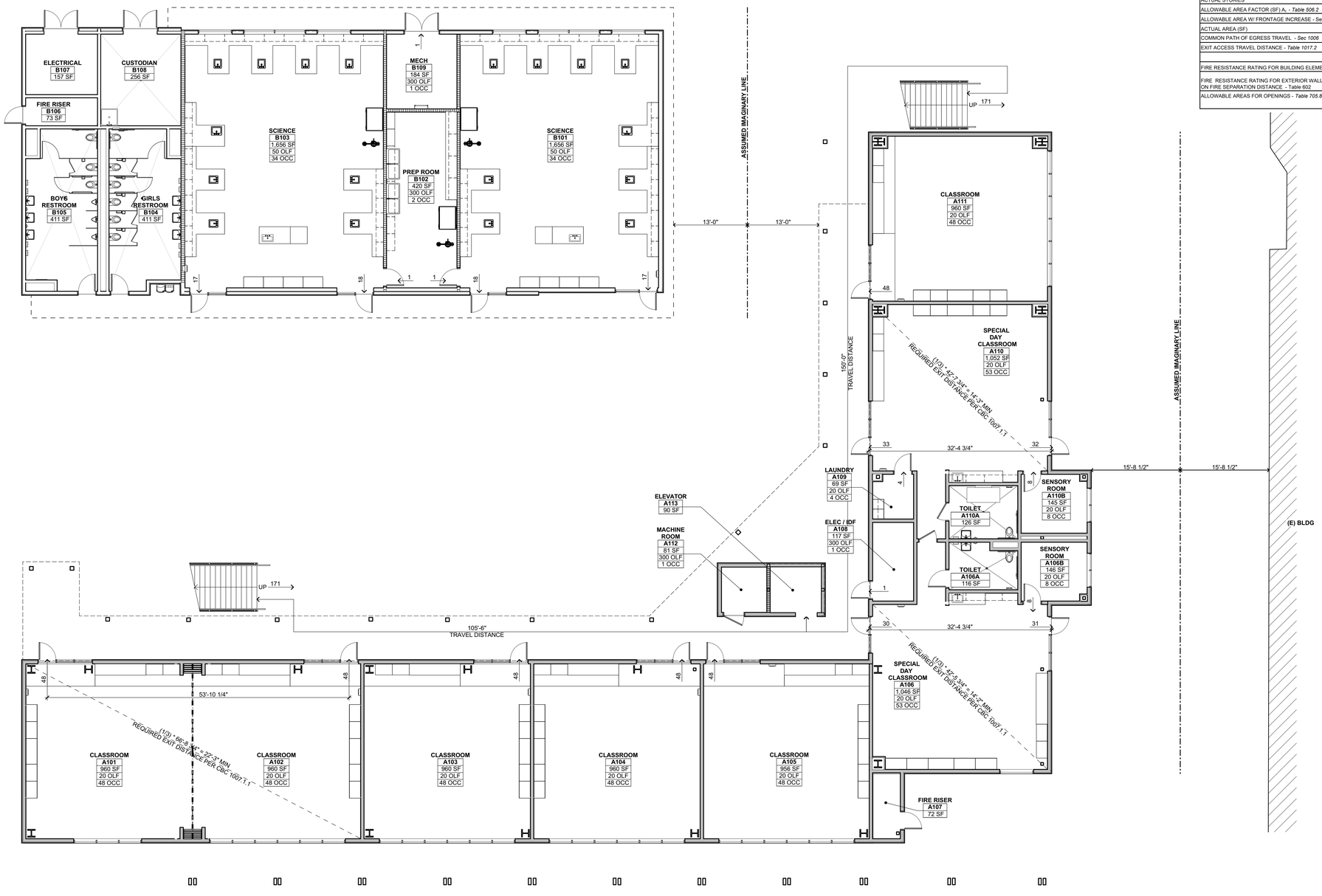

FIRST FLOOR EXITING PLAN 1
1/8" = 1'-0"

NORTH

IDENTIFICATION STAMP
DIV. OF THE STATE ARCHITECT
APP: 01-119994 INC:
REVIEWED FOR
SS ☑ FLS ☑ ACS ☑
DATE: 08/16/2022

QUATTROCCHI KWOK ARCHITECTS
Main:
636 Fifth Street, Santa Rosa, CA 95404
East Bay:
55 Harrison Street, Suite 525,
Oakland, CA 94607
(707) 576-0829

LICENSED ARCHITECT
JIM THEISS
LICENSE # C22643
EXP JUNE 30, 2023
STATE OF CALIFORNIA

SIGNED: JUNE 24, 2022

LIBERTY HIGH SCHOOL

NEW CLASSROOM BUILDINGS

850 2ND STREET
BRENTWOOD, CA
94513

LIBERTY UNION HIGH SCHOOL DISTRICT

DSA APP NO. 01-119994

ARCH PROJECT NO:	1925.00
DRAWN BY:	*JDS*
DRAWING SCALE:	1/8" = 1'-0"
PTN: 61721-83	FILE NO: 7-H4

CONSTRUCTION DOCUMENTS

JUNE 24, 2022

SHEET TITLE

FIRST FLOOR CODE ANALYSIS AND EXITING PLAN

SHEET NUMBER

G-0.4

BIMcloud: archiserver - BIMcloud Basic for ARCHICAD 22/1925.00 Liberty HS Classroom_BLDG A_AC22:7/27/2022:5:27 PM

CODE COMPLIANCE SUMMARY *Based on 2019 California Building Code (CBC)* 4/29/2022

BUILDING ID	A	COMPLIES	B	COMPLIES
Program	**CLASSROOM BLDG**		**SCIENCE BLDG**	
Scope	New		New	
OCCUPANCY GROUP- *Sec 303*	E		E	
CONSTRUCTION TYPE- *Sec 601*	II-B		V-B	
AUTOMATIC FIRE SUPPRESSION SYSTEM - *Sec 903.2*	YES		YES	
ALLOWABLE BUILDING HT - *Table 504.3*	55'		40'	
ACTUAL BUILDING HT	30'-0"	OK	23'-7 3/4"	OK
ALLOWABLE NUMBER OF STORIES - *Table 504.4*	2		1	
ACTUAL STORIES	2	OK	1	OK
ALLOWABLE AREA FACTOR (SF) A, - *Table 506.2*	43,500		38,000	
ALLOWABLE AREA W/ FRONTAGE INCREASE - Sec 506.3.3	(Not Needed)		(Not Needed)	
ACTUAL AREA (SF)	17,209	OK	5,119	OK
COMMON PATH OF EGRESS TRAVEL - *Sec 1006*	75'	OK	75'	OK
EXIT ACCESS TRAVEL DISTANCE - *Table 1017.2*	250'	OK	250'	OK
FIRE RESISTANCE RATING FOR BUILDING ELEMENTS - Table	0-Hour	OK	0-HOUR	OK
FIRE RESISTANCE RATING FOR EXTERIOR WALLS BASED ON FIRE SEPARATION DISTANCE - Table 602	10≤X<30 = 0 HR X≥30 = 0 HR	OK	10≤X<30 = 0 HR X≥30 = 0 HR	OK
ALLOWABLE AREAS FOR OPENINGS - *Table 705.8*	UP/S 75%	OK	UP/S 75%	OK

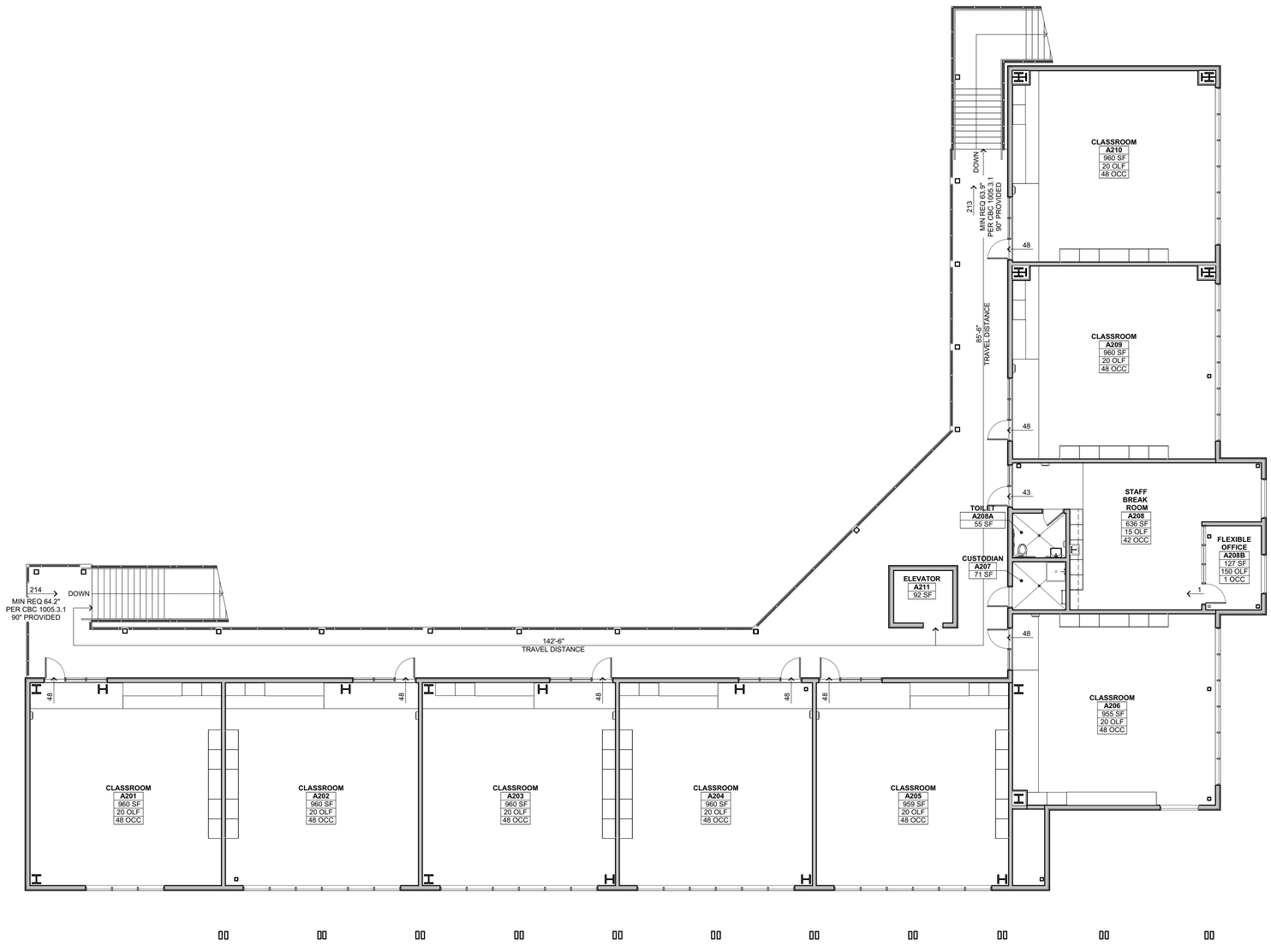

SECOND FLOOR EXITING PLAN (1)
1/8" = 1'-0"

NORTH

IDENTIFICATION STAMP
DIV. OF THE STATE ARCHITECT
APP: 01-119994 INC:
REVIEWED FOR
SS ☑ FLS ☑ ACS ☑
DATE: 08/16/2022

QUATTROCCHI KWOK ARCHITECTS
Main:
636 Fifth Street, Santa Rosa, CA 95404
East Bay:
55 Harrison Street, Suite 525,
Oakland, CA 94607
(707) 576-0829

LICENSED ARCHITECT
JIM THEISS
LICENSE # C22643
EXP JUNE 30, 2023
STATE OF CALIFORNIA

SIGNED: JUNE 24, 2022

LIBERTY HIGH SCHOOL

NEW CLASSROOM BUILDINGS

850 2ND STREET
BRENTWOOD, CA
94513

LIBERTY UNION HIGH SCHOOL DISTRICT

DSA APP NO. 01-119994

ARCH PROJECT NO:	1925.00
DRAWN BY:	JDS
DRAWING SCALE:	1/8" = 1'-0"
PTN: 61721-83	FILE NO: 7-H4

CONSTRUCTION DOCUMENTS

JUNE 24, 2022

SHEET TITLE

SECOND FLOOR CODE ANALYSIS AND EXITING PLAN

SHEET NUMBER

G-0.5

BIMcloud: archiserver - BIMcloud Basic for ARCHICAD 22/1925.00 Liberty HS Classroom, BLDG A AC22 7/27/2022 5:28 PM

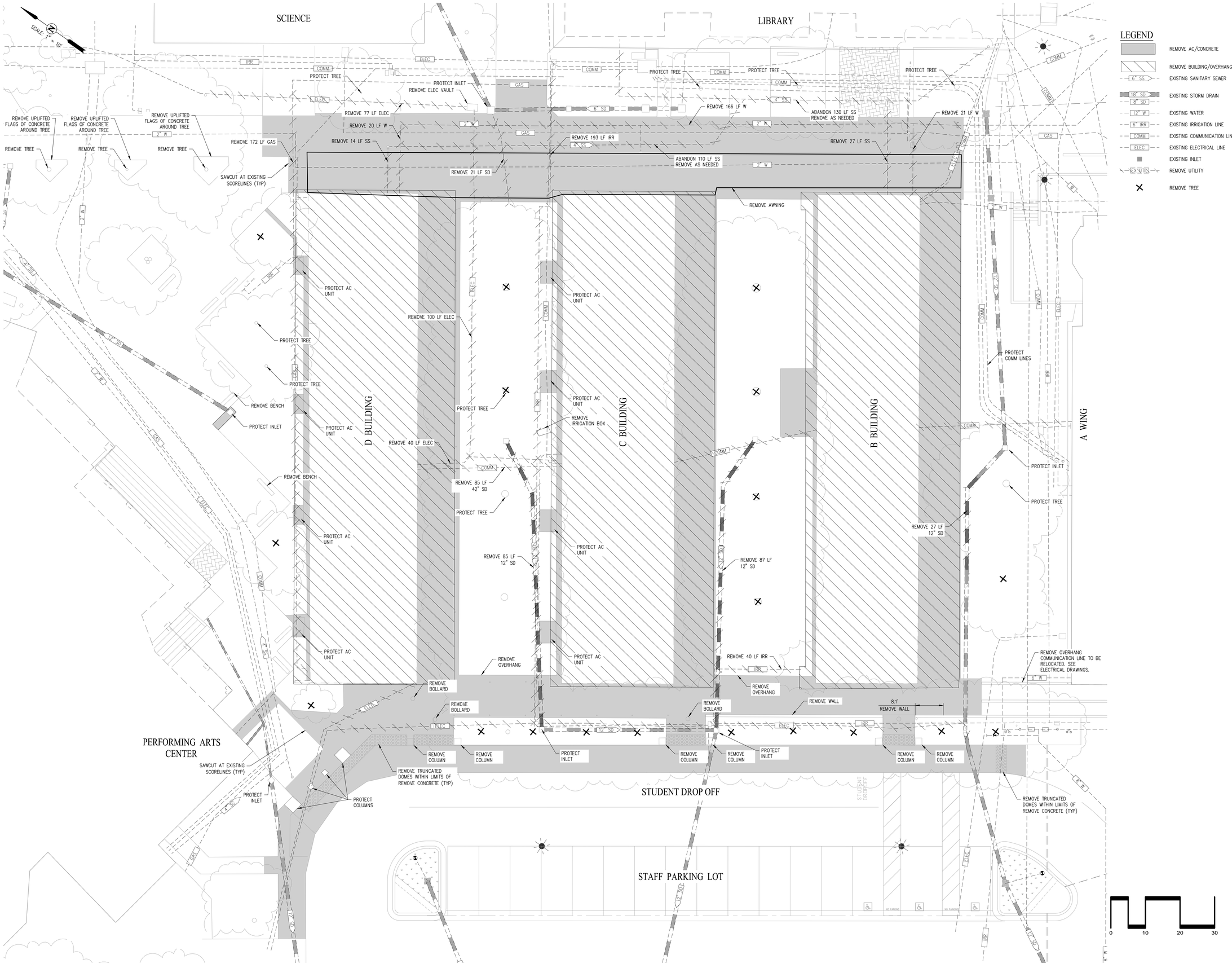

IDENTIFICATION STAMP
DIV. OF THE STATE ARCHITECT
APP: 01-119994 INC:
REVIEWED FOR
SS ☑ FLS ☑ ACS ☑
DATE: 08/16/2022

QUATTROCCHI KWOK ARCHITECTS
Main:
636 Fifth Street, Santa Rosa, CA 95404
East Bay:
55 Harrison Street, Suite 525,
Oakland, CA 94607
(707) 576-0829

cbg CIVIL ENGINEERS • SURVEYORS • PLANNERS
SAN RAMON • (925) 866-0322
SACRAMENTO • (916) 375-1877
WWW.CBANDG.COM

REGISTERED PROFESSIONAL ENGINEER
JASON D. VOGT
59299
CIVIL
STATE OF CALIFORNIA

LIBERTY HIGH SCHOOL

NEW CLASSROOM BUILDING

850 2ND STREET
BRENTWOOD, CA
94513

LIBERTY UNION HIGH SCHOOL DISTRICT

REVISIONS

DSA APP NO. 01-119994

ARCH PROJECT NO:	1925.00
DRAWN BY:	MJV
DRAWING SCALE:	AS SHOWN
PTN: 61721-83	FILE NO: 7-H4

CONSTRUCTION DOCUMENTS

JUNE 24, 2022

SHEET TITLE

EXISTING CONDITIONS/ DEMOLITION

SHEET NUMBER

C-1.0

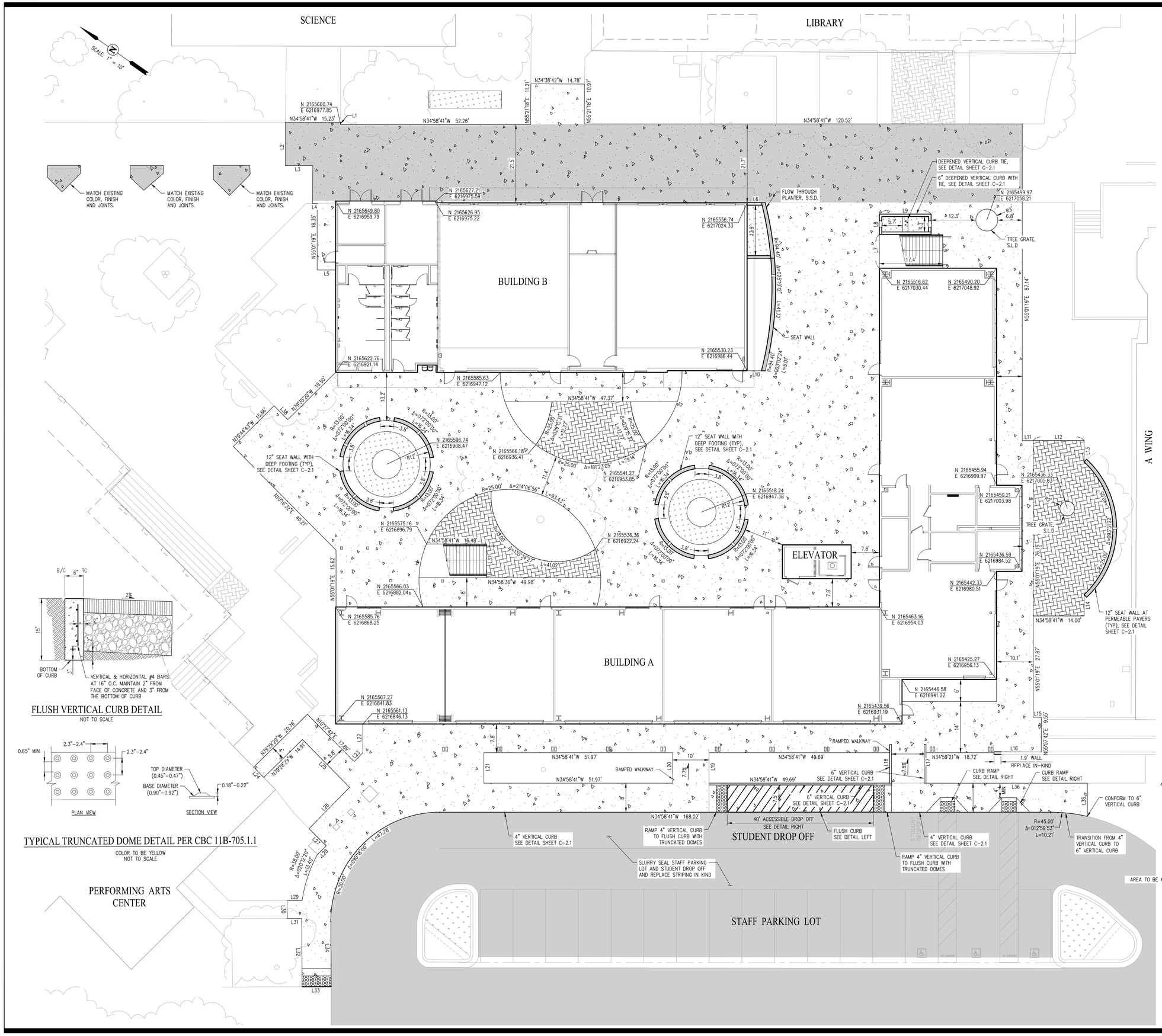

LEGEND

- SEAT WALLS (SEE DETAIL SHEET C-2.1)
- BIORETENTION AREA (SEE DETAIL SHEET C-5.0)
- PEDESTRIAN CONCRETE SECTION (SEE DETAIL SHEET C-2.1)
- VEHICULAR CONCRETE SECTION (SEE DETAIL SHEET C-2.1)
- PROPOSED PERVIOUS PAVERS (SEE DETAIL SHEET C-2.1)
- SEAT WALL PUNCH THROUGH (SEE DETAIL SHEET C-2.1)
- CURB CUT (SEE DETAIL SHEET C-2.1)

LINE TABLE		
NO	LENGTH	BEARING
L1	0.62'	N56° 22' 36.61"E
L2	11.93'	N55° 01' 19.69"E
L3	7.54'	N34° 55' 51.77"W
L4	1.27'	N35° 54' 34.24"W
L5	5.07'	N34° 58' 40.95"W
L6	4.96'	N34° 58' 40.95"W
L7	9.28'	N55° 01' 19.05"E
L8	5.58'	N55° 01' 19.05"E
L9	14.23'	N34° 58' 40.95"W
L10	4.96'	N34° 58' 40.95"W
L11	3.00'	N34° 58' 40.95"W
L12	14.00'	N34° 58' 40.95"W
L13	5.88'	N55° 01' 19.41"E
L14	5.88'	N55° 01' 19.41"E
L15	2.23'	N34° 58' 40.95"W
L16	12.99'	N34° 52' 18.02"W
L17	10.68'	N55° 01' 19.05"E
L18	10.68'	N55° 01' 19.05"E
L19	8.38'	N55° 01' 19.05"E

LINE TABLE		
NO	LENGTH	BEARING
L20	8.38'	N55° 01' 19.05"E
L21	8.38'	N55° 01' 19.05"E
L22	7.87'	N55° 01' 19.05"E
L23	3.44'	N80° 37' 26.54"W
L24	4.00'	N10° 31' 31.36"E
L25	18.47'	N10° 27' 41.71"E
L26	15.93'	N80° 37' 26.53"W
L27	6.65'	N10° 08' 26.27"E
L28	3.35'	N79° 51' 33.73"W
L29	4.18'	N35° 26' 33.33"W
L30	4.96'	N54° 33' 26.67"E
L31	4.00'	N35° 07' 35.27"W
L32	18.81'	N54° 43' 19.07"E
L33	7.99'	N35° 16' 40.93"W
L34	17.86'	N54° 43' 19.07"E
L35	9.15'	N55° 03' 32.70"E
L36	44.89'	N34° 58' 40.95"W
L37	9.28'	N55° 01' 19.47"E
L38	5.34'	N10° 20' 49.30"E

IDENTIFICATION STAMP
DIV. OF THE STATE ARCHITECT
APP: 01-119994 INC:
REVIEWED FOR
SS ☑ FLS ☑ ACS ☑
DATE: 08/16/2022

QUATTROCCHI KWOK ARCHITECTS
Main:
636 Fifth Street, Santa Rosa, CA 95404
East Bay:
55 Harrison Street, Suite 525,
Oakland, CA 94607
(707) 576-0829

cbg CIVIL ENGINEERS • SURVEYORS • PLANNERS
SAN RAMON • (925) 866-0322
SACRAMENTO • (916) 375-1877
WWW.CBANDG.COM

REGISTERED PROFESSIONAL ENGINEER
JASON D. VOGT
59299
CIVIL
STATE OF CALIFORNIA

LIBERTY HIGH SCHOOL

NEW CLASSROOM BUILDING

850 2ND STREET
BRENTWOOD, CA
94513

LIBERTY UNION HIGH SCHOOL DISTRICT

REVISIONS

DSA APP NO. 01-119994
ARCH PROJECT NO: 1925.00
DRAWN BY: MJV
DRAWING SCALE: AS SHOWN
PTN: 61721-83 FILE NO: 7-H4
CONSTRUCTION DOCUMENTS
JUNE 24, 2022

SHEET TITLE

HORIZONTAL CONTROL PLAN

SHEET NUMBER

C-2.0

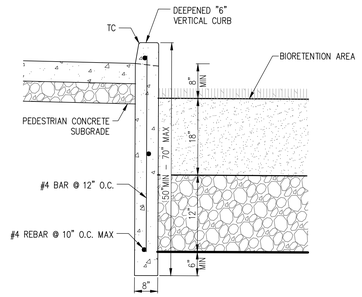

*18" MINIMUM HOOK FROM HORIZONTAL REINFORCING TO PERPENDICULAR CURB WALL

6" DEEPENED VERTICAL CURB

NOT TO SCALE

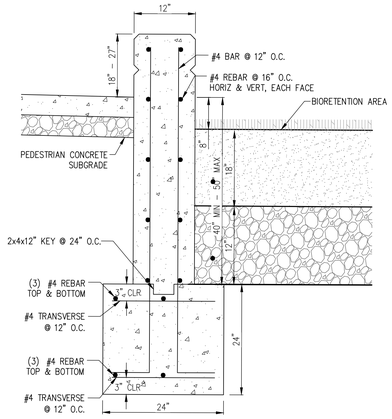

SEAT WALL WITH DEEP FOOTING

NOT TO SCALE

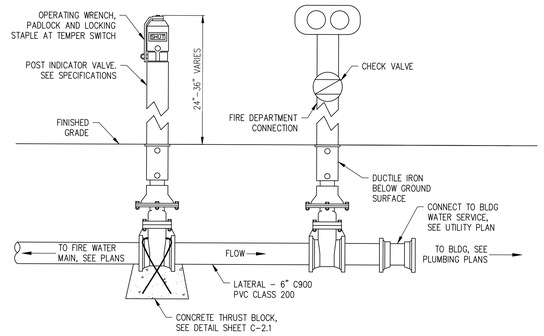

POST INDICATOR VALVE & FIRE DEPARTMENT CONNECTION

NOT TO SCALE

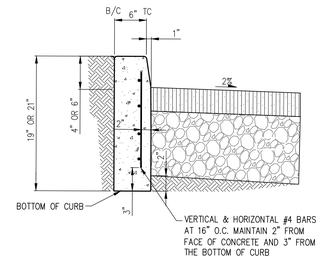

4" OR 6" VERTICAL CURB DETAIL

NOT TO SCALE

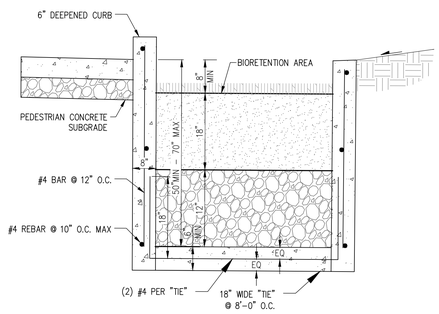

DEEPENED VERTICAL CURB WITH TIE

NOT TO SCALE

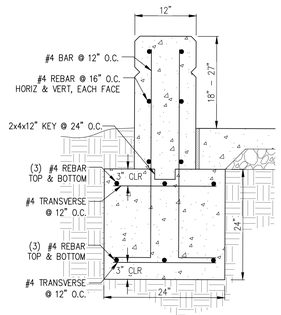

SEAT WALL

NOT TO SCALE

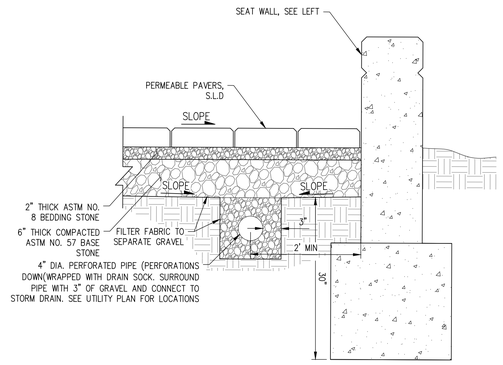

PERMEABLE PAVERS & WALL INTERFACE

NOT TO SCALE

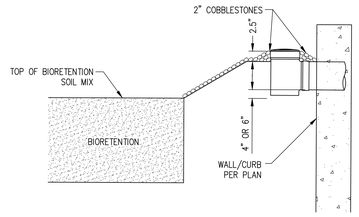

NDS POP-UP DRAINAGE EMITTER - (OR APPROVED EQUIVALENT) AT BIORETENTION PLANTERS

NOT TO SCALE

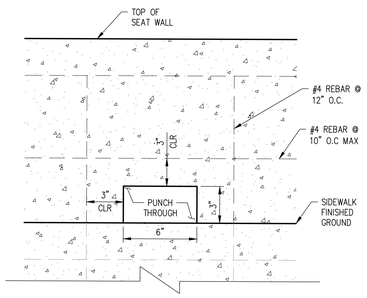

SEAT WALL PUNCH THROUGH

NOT TO SCALE

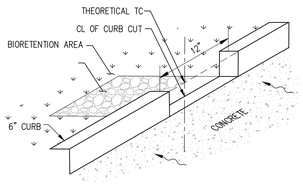

PEDESTRIAN CURB CUT DETAIL

NOT TO SCALE

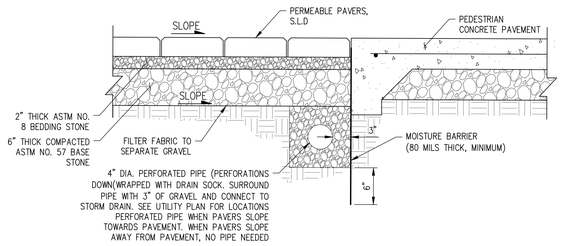

PERMEABLE PAVERS & PEDESTRIAN CONCRETE PAVEMENT INTERFACE

NOT TO SCALE

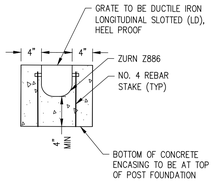

TRENCH DRAIN ENCASING

NOT TO SCALE

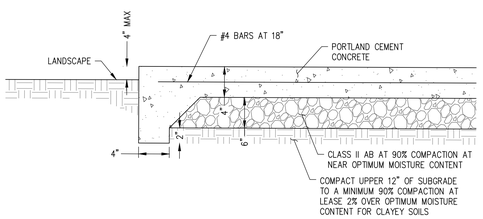

PEDESTRIAN CONCRETE PAVEMENT SECTION

NOT TO SCALE

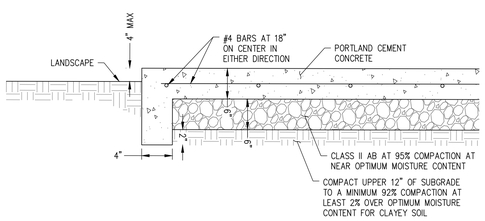

VEHICULAR CONCRETE PAVEMENT SECTION

NOT TO SCALE

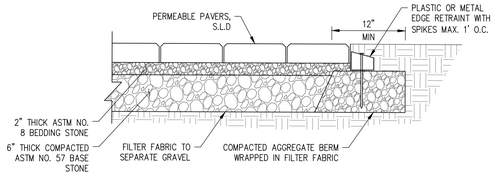

PERMEABLE PAVERS & LANDSCAPING INTERFACE

NOT TO SCALE

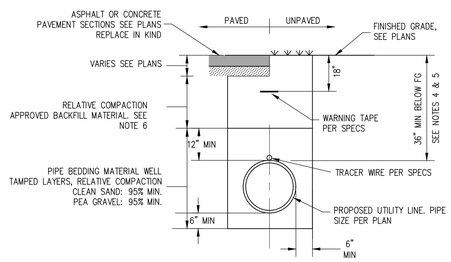

NOTES:

1. BEDDING SHOULD EXTEND A MINIMUM D/4 (D=OUTSIDE PIPE DIAMETER) BELOW BOTTOM OF PIPE.
2. SEE PROJECT SPECIFICATIONS FOR FURTHER UTILITY TRENCH REQUIREMENTS.
3. WHERE TRENCHES EXCEED 5' DEEP, CONTRACTOR TO CONFORM TO CURRENT OSHA REQUIREMENTS FOR SHORING, SLOPING, AND WORKING SAFELY.
4. COVER FOR PAVED AREAS IS DEFINED FROM TOP OF PIPE TO BOTTOM OF AGGREGATE BASE.
5. COVER FOR UNPAVED AREAS IS DEFINED FROM TOP OF PIPE TO TOP OF FINISHED SURFACE.
6. THE RELATIVE COMPACTION FOR APPROVED NATIVE MATERIAL, IMPORTED FILL, AND CALTRANS CLASS II AGGREGATE BASE SHALL BE AS FOLLOW:
   PAVED AREAS: 95% MINIMUM
   NON-PAVED AREAS: 90% MINIMUM

FIRE WATER TRENCH DETAIL

NOT TO SCALE

IDENTIFICATION STAMP
DIV. OF THE STATE ARCHITECT
APP: 01-119994 INC:
REVIEWED FOR
SS ☑ FLS ☑ ACS ☑
DATE: 08/16/2022

QUATTROCCHI KWOK ARCHITECTS
Main:
636 Fifth Street, Santa Rosa, CA 95404
East Bay:
55 Harrison Street, Suite 525,
Oakland, CA 94607
(707) 576-0829

cbg CIVIL ENGINEERS • SURVEYORS • PLANNERS
SAN RAMON • (925) 866-0322
SACRAMENTO • (916) 375-1877
WWW.CBANDG.COM

REGISTERED PROFESSIONAL ENGINEER JASON D. VOGT 59299 CIVIL STATE OF CALIFORNIA

LIBERTY HIGH SCHOOL

NEW CLASSROOM BUILDING

850 2ND STREET
BRENTWOOD, CA
94513

LIBERTY UNION HIGH SCHOOL DISTRICT

REVISIONS

DSA APP NO. 01-119994

ARCH PROJECT NO:	1925.00
DRAWN BY:	MJV
DRAWING SCALE:	AS SHOWN
PTN: 61721-83	FILE NO: 7-H4

CONSTRUCTION DOCUMENTS

JUNE 24, 2022

SHEET TITLE

DETAILS

SHEET NUMBER

C-2.1

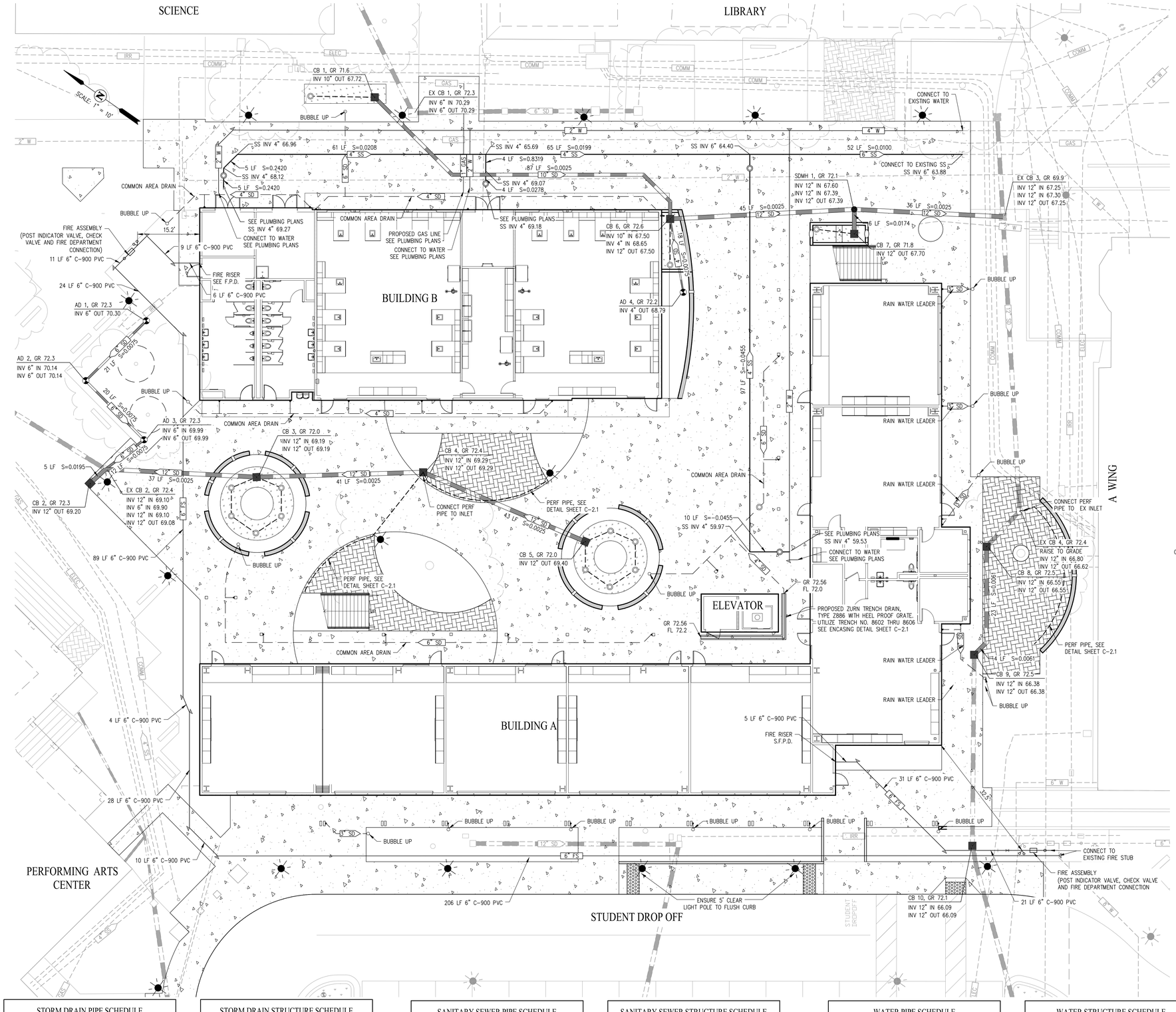

LEGEND

- AC PAVEMENT
- CONCRETE SIDEWALK/GUTTER
- BIO-RETENTION AREA
- 12" SD — PROPOSED STORM DRAIN
- 4" SD — PROPOSED PERFORATED STORM DRAIN
- 4" SS — PROPOSED SEWER LATERAL
- 2" W — PROPOSED WATER LATERAL
- 4" FS — PROPOSED FIRE SERVICE (SEE TRENCH DETAIL SHEET C-2.1)
- RAIN WATER LEADER / COMMON AREA DRAIN
- PIV
- FDC
- SINGLE CHECK VALVE
- THRUST BLOCK PER DETAIL BELOW
- PROPOSED CATCH BASIN
- PROPOSED BUBBLE UP (SEE DETAIL SHEET C-2.1)
- PROPOSED SD OR SS CLEANOUT
- PROPOSED LIGHT (S.E.D.)
- 8" SS — EXISTING SEWER
- 12" SD — EXISTING STORM DRAIN
- 12" W — EXISTING WATER
- 6" IRR — EXISTING IRRIGATION
- EXISTING FIELD INLET
- EXISTING LIGHT

NOTES

1. WHEREVER PIPES DISCHARGE INTO THE BIORETENTION AREA, INSTALL A 2'x2' APRON OF 4" – 6" APPROVED COBBLES.
2. COMPLY WITH TREE PRESERVATION STANDARDS ON L4.1.
3. TRENCH RESTORATION WITHIN THE CITY RIGHT-OF-WAY SHALL COMPLY WITH CITY OF BRENTWOOD STANDARD DETAIL ST-25a & ST-25b.

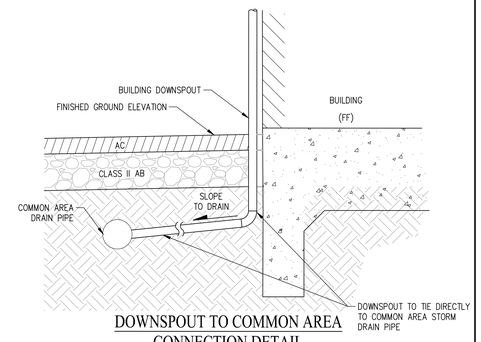

DOWNSPOUT TO COMMON AREA CONNECTION DETAIL

NOT TO SCALE

TYPICAL INSTALLATION	PIPE SIZE 6"	8"	10"	12"
REQUIRED BEARING AREA (SQUARE FEET): 90° BEND	4	7	12	16
45° BEND	3	5	8	12
11.25° OR 22.5° BEND	2	3	5	6
TEE OR DEAD END	4	7	12	16
TEE WITH 45° BEND	4	7	12	16
CROSS WITH 45° BEND	4	7	12	16
CROSS OR TEE WITH 90° BEND	4	7	12	16

(Not To Scale)

NOTES:

1. THRUST BLOCK SHALL BE CLASS "B" CONCRETE AND SHALL BE POURED AGAINST UNDISTURBED SOIL.
2. THE BEARING AREAS GIVEN ARE FOR CLASS 200 PIPE AT TEST PRESSURE OF 150 P.S.I. IN SOIL WITH 1,000 P.S.F. BEARING CAPACITY. INSTALLATIONS USING DIFFERENT PIPE, TEST PRESSURES, AND/OR SOIL TYPES SHALL BE APPROVED BY THE CITY ENGINEER.
3. JOINTS AND FACE OF PLUGS SHALL BE KEPT CLEAR OF CONCRETE.

REGISTERED PROFESSIONAL ENGINEER — BALWINDER S. GREWAL — R. 49123 — EXP. 9/30/24 — STATE OF CALIFORNIA

PUBLIC WORKS DEPARTMENT

THE CITY OF BRENTWOOD

THRUST BLOCK BEARING AREA

BALWINDER S. GREWAL — CITY ENGINEER — DATE: APR. 15, 1999 — REVISED: DEC. 31, 2013 — SHEET No. W-15

STORM DRAIN PIPE SCHEDULE	
STRUCTURE	DESCRIPTION
4" PERFORATED PIPE	240 LF PVC
3" PIPE	120 LF PVC
4" PIPE	245 LF PVC
6" PIPE	250 LF HDPE
10" PIPE	90 LF HDPE
12" PIPE	245 LF HDPE

STORM DRAIN STRUCTURE SCHEDULE	
STRUCTURE	DESCRIPTION
AREA DRAIN 1–4 (4 TOTAL)	NDS #918B WITH HEEL GRATE
BUBBLE UP (15 TOTAL)	NDS POP-UP DRAINAGE EMITTER
FIELD INLET 1 – 10 (10 TOTAL)	OLDCASTLE PRECAST CB1818
MANHOLE 1 (1 TOTAL)	TYPE A PER CITY OF BRENTWOOD STANDARD SS-2

SANITARY SEWER PIPE SCHEDULE	
STRUCTURE	DESCRIPTION
4" PIPE	250 LF, PVC SDR 35
6" PIPE	52 LF, PVC SDR 35

SANITARY SEWER STRUCTURE SCHEDULE	
STRUCTURE	DESCRIPTION
SSCO (4 TOTAL)	PER CITY OF BRENTWOOD STANDARD SS-1

WATER PIPE SCHEDULE	
STRUCTURE	DESCRIPTION
2" PIPE	275 LF PVC
4" PIPE	45 LF PVC
6" PIPE (FIRE SERVICE)	425 LF PVC

WATER STRUCTURE SCHEDULE	
STRUCTURE	DESCRIPTION
UL SWING CHECK VALVE (2 TOTAL)	NIBCO F-908-W 175 PSI WWP IRON BODY CHECK VALVE
PIV (2 TOTAL)	MUELLER A-20801 PER CITY OF BRENTWOOD STANDARD W-4
FIRE DEPT. CONNECTION (2 TOTAL)	POTTER ROEMER 5715-(2) 2 1/2" INLETS X (1) 4" OUTLET

0 10 20 30

IDENTIFICATION STAMP
DIV. OF THE STATE ARCHITECT
APP: 01-119994 INC:
REVIEWED FOR
SS ☑ FLS ☑ ACS ☑
DATE: 08/16/2022

QUATTROCCHI KWOK ARCHITECTS
Main:
636 Fifth Street, Santa Rosa, CA 95404
East Bay:
55 Harrison Street, Suite 525,
Oakland, CA 94607
(707) 576-0829

cbg CIVIL ENGINEERS
SAN RAMON • (925) 866-0322
SACRAMENTO • (916) 375-1877
WWW.CBANDG.COM
CIVIL ENGINEERS • SURVEYORS • PLANNERS

REGISTERED PROFESSIONAL ENGINEER — JASON D. VOGT — 59299 — STATE OF CALIFORNIA — CIVIL

LIBERTY HIGH SCHOOL

NEW CLASSROOM BUILDING

850 2ND STREET
BRENTWOOD, CA
94513

LIBERTY UNION HIGH SCHOOL DISTRICT

REVISIONS

DSA APP NO. 01-119994

ARCH PROJECT NO: 1925.00
DRAWN BY: MJV
DRAWING SCALE: AS SHOWN
PTN: 61721-83 FILE NO: 7-H4

CONSTRUCTION DOCUMENTS

JUNE 24, 2022

SHEET TITLE

UTILITY PLAN

SHEET NUMBER

C-3.0

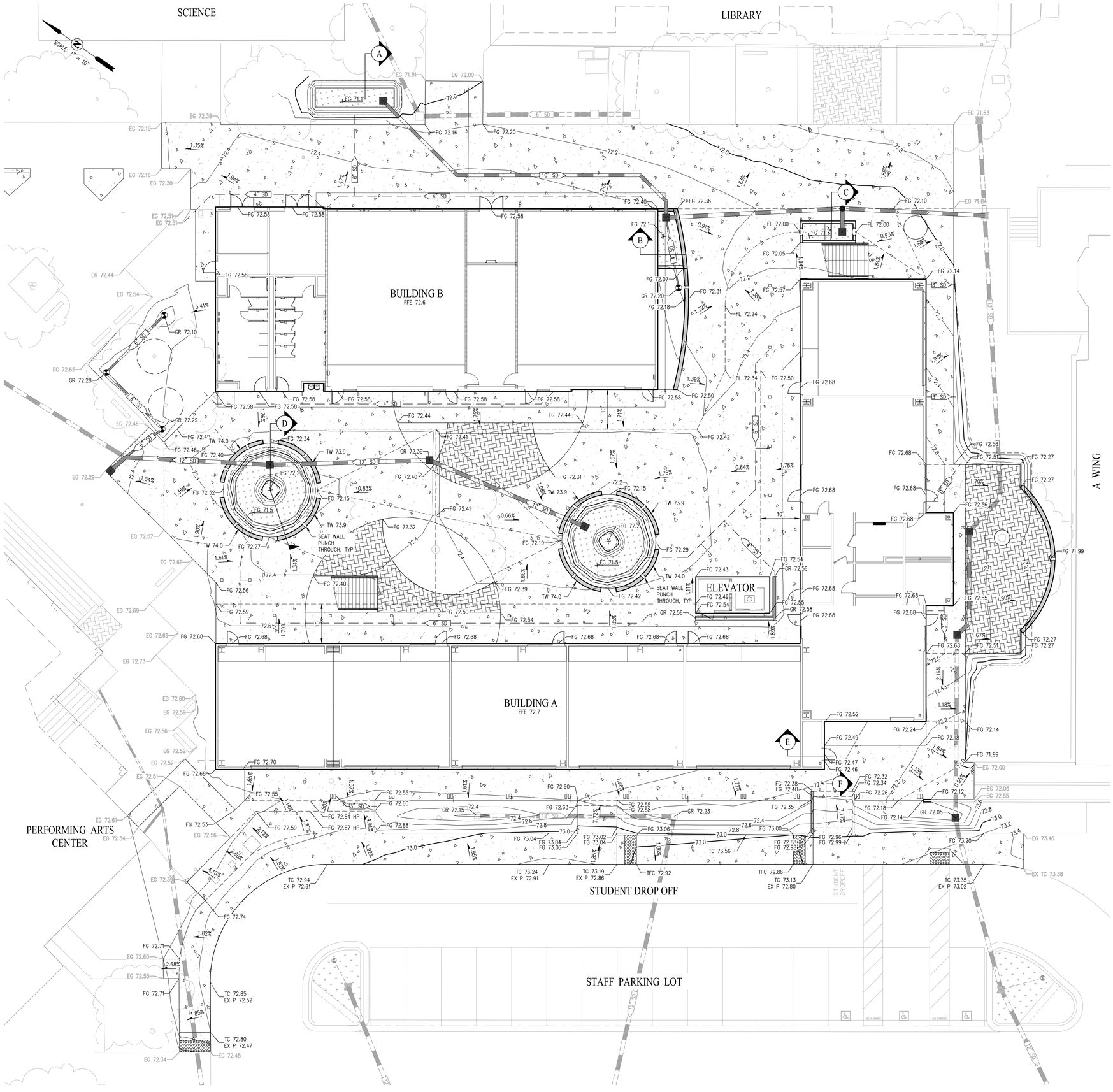

LEGEND

- CONCRETE SIDEWALK/GUTTER
- BIO-RETENTION AREA
- PROPOSED STORM DRAIN
- PROPOSED CATCH BASIN
- EXISTING STORM DRAIN
- EXISTING FIELD INLET
- PROPOSED GRADE BREAK

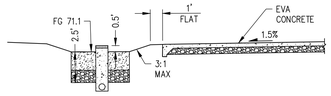

A-A DETAIL
NOT TO SCALE

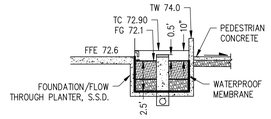

B-B DETAIL
NOT TO SCALE

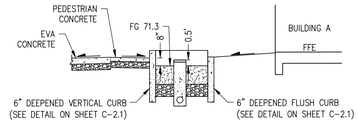

SECTION C
NOT TO SCALE

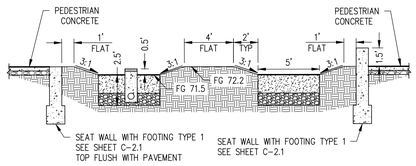

D-D DETAIL
NOT TO SCALE

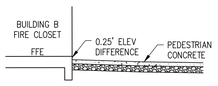

E-E DETAIL
NOT TO SCALE

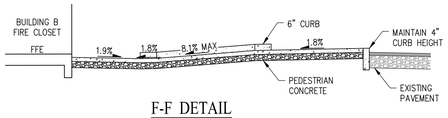

F-F DETAIL
NOT TO SCALE

0 10 20 30

IDENTIFICATION STAMP
DIV. OF THE STATE ARCHITECT
APP: 01-119994 INC:
REVIEWED FOR
SS ☑ FLS ☑ ACS ☑
DATE: 08/16/2022

QUATTROCCHI KWOK ARCHITECTS
Main:
636 Fifth Street, Santa Rosa, CA 95404
East Bay:
55 Harrison Street, Suite 525,
Oakland, CA 94607
(707) 576-0829

cbg CIVIL ENGINEERS
SAN RAMON • (925) 866-0322
SACRAMENTO • (916) 375-1877
WWW.CBANDG.COM
CIVIL ENGINEERS • SURVEYORS • PLANNERS

REGISTERED PROFESSIONAL ENGINEER
JASON D. VOGT
59299
CIVIL
STATE OF CALIFORNIA

LIBERTY HIGH SCHOOL

NEW CLASSROOM BUILDING

850 2ND STREET
BRENTWOOD, CA
94513

LIBERTY UNION HIGH SCHOOL DISTRICT

REVISIONS

DSA APP NO. 01-119994

ARCH PROJECT NO:	1925.00
DRAWN BY:	MJV
DRAWING SCALE:	AS SHOWN
PTN: 61721-83	FILE NO: 7-H4

CONSTRUCTION DOCUMENTS

JUNE 24, 2022

SHEET TITLE

GRADING PLAN

SHEET NUMBER

C-4.0

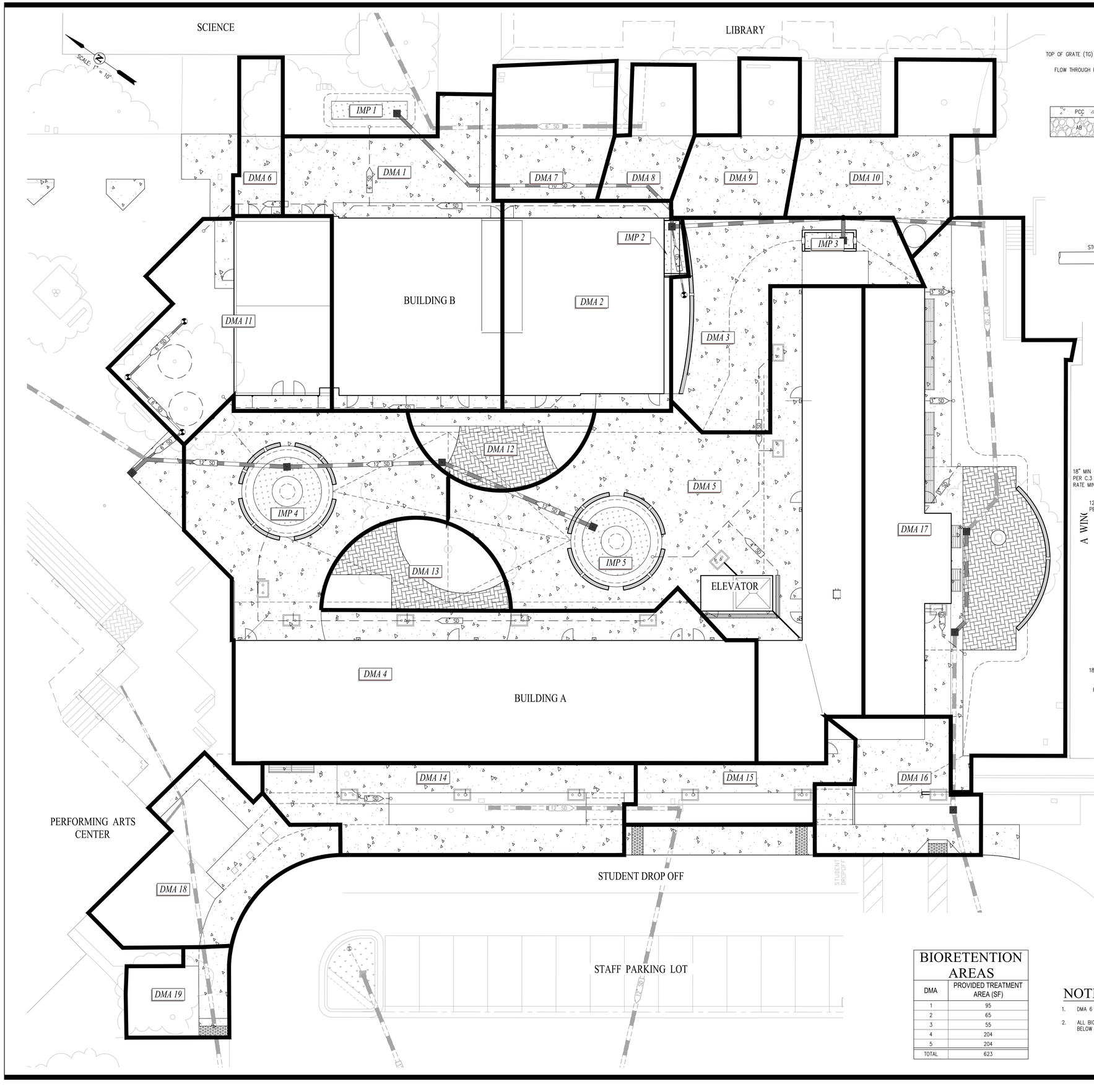

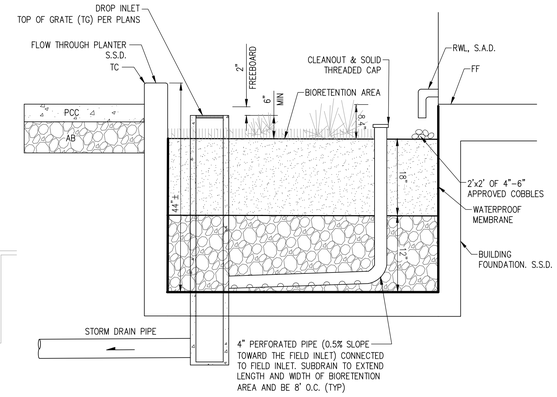

FLOW THROUGH PLANTER

NOT TO SCALE

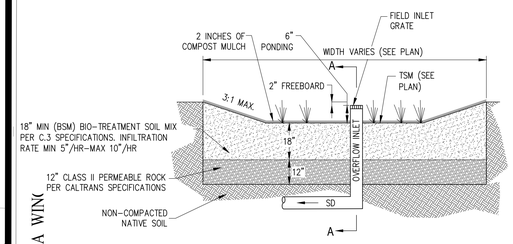

TYPICAL BIORETENTION CROSS SECTION

NOT TO SCALE

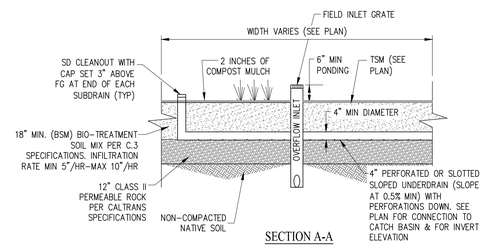

SECTION A-A

NOT TO SCALE

LEGEND

EXISTING	PROPOSED	
12" SD	12" SD	
IMP 1		INTEGRATED MANAGEMENT PRACTICE – BIORETENTION AREA
		DRAINAGE MANAGEMENT AREA BOUNDARY
DMA 1		DRAINAGE MANAGEMENT AREA DRAINING TO PARKING INFILTRATION TRENCH AREA OR BIO-RETENTION AREA
		GRADE BREAK
		RAIN WATER LEADER / COMMON AREA DRAIN

BIORETENTION AREAS

DMA	PROVIDED TREATMENT AREA (SF)
1	95
2	65
3	55
4	204
5	204
TOTAL	623

NOTES

1. DMA 6 THROUGH 19 ARE SELF RETAINING AREAS.
2. ALL BIORETENTION TOP OF SOIL ELEVATION IS 8" BELOW ADJACENT GROUND ELEVATION.

0 10 20 30

IDENTIFICATION STAMP
DIV. OF THE STATE ARCHITECT
APP: 01-119994 INC:
REVIEWED FOR
SS ☑ FLS ☑ ACS ☑
DATE: 08/16/2022

QUATTROCCHI KWOK ARCHITECTS
Main:
636 Fifth Street, Santa Rosa, CA 95404
East Bay:
55 Harrison Street, Suite 525,
Oakland, CA 94607
(707) 576-0829

cbg CIVIL ENGINEERS • SURVEYORS • PLANNERS
SAN RAMON • (925) 866-0322
SACRAMENTO • (916) 375-1877
WWW.CBANDG.COM

REGISTERED PROFESSIONAL ENGINEER
JASON D. VOGT
59299
CIVIL
STATE OF CALIFORNIA

LIBERTY HIGH SCHOOL

NEW CLASSROOM BUILDING

850 2ND STREET
BRENTWOOD, CA
94513

LIBERTY UNION HIGH SCHOOL DISTRICT

REVISIONS

DSA APP NO. 01-119994

ARCH PROJECT NO: 1925.00
DRAWN BY: MJV
DRAWING SCALE: AS SHOWN
PTN: 61721-83 FILE NO: 7-H4

CONSTRUCTION DOCUMENTS

JUNE 24, 2022

SHEET TITLE

STORMWATER CONTROL PLAN

SHEET NUMBER

C-5.0

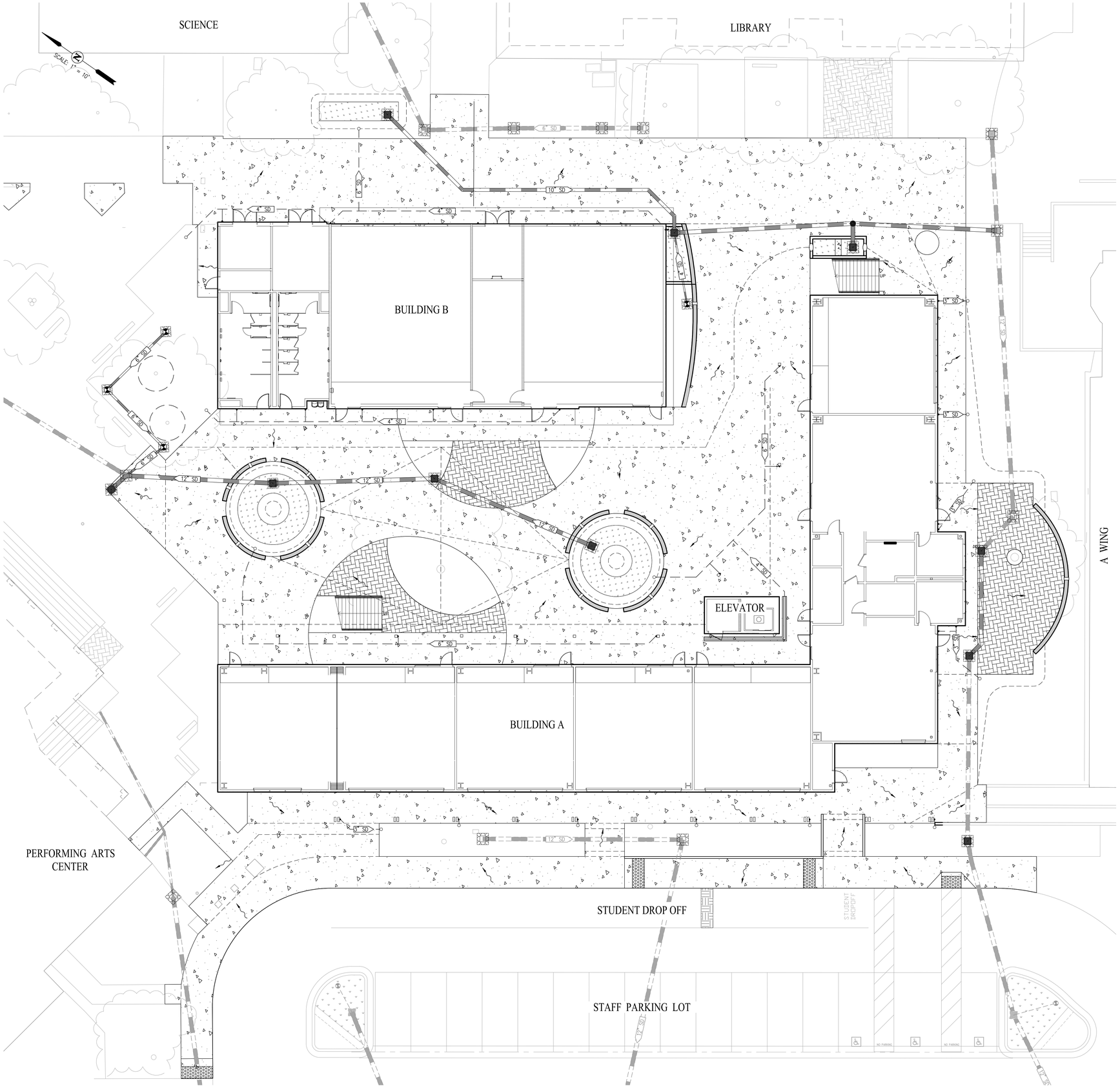

WDID #:

GENERAL NOTES:

1. LEGALLY RESPONSIBLE PARTY/PERSON (LRP) OWNER/SUBDIVIDER: LIBERTY UNION HIGH SCHOOL DISTRICT
850 2ND STREET
BRENTWOOD, CA 94513

2. CIVIL ENGINEER: CARLSON, BARBEE & GIBSON, INC.
2633 CAMINO RAMON, SUITE 350
SAN RAMON, CA 94583
(925) 866-0322
JASON VOGAN, RCE 59299

3. GEOTECHNICAL ENGINEER: BSK ASSOCIATES
399 LINDBERGH AVENUE
LIVERMORE, CA 94551
(925) 315-3151
CARRIE FOULK

LEGEND

- DIRECTION OF FLOW WITH STORM DRAIN INSTALLED
- FIELD INLET PROTECTION – (SE-10)
- CURB INLET PROTECTION – (SE-10)
- FIBER ROLL – (SE-5)
- STABILIZED CONSTRUCTION ENTRANCE/EXIT – (TC-1)
- FIELD INLET
- CURB CUT
- 15" SD – PROPOSED STORM DRAIN
- 18" SD – EXISTING STORM DRAIN
- 8" SD – EXISTING STORM DRAIN

NOTE:

* STORMWATER DISCHARGE SAMPLING LOCATIONS ARE SUBJECT TO CHANGE AND WILL BE REMOVED, RELOCATED OR ADDED AT THE QSP'S DISCRETION.

APPLICABLE (BUT NOT LIMITED TO) CURRENT CASQA STORMWATER BMP CONSTRUCTION HANDBOOK

EC-1	SCHEDULING
EC-3	HYDROMULCH
EC-4	HYDROSEED
NS-1	WATER CONSERVATION PRACTICES
NS-2	DEWATERING OPERATIONS
NS-3	PAVING & GRINDING OPERATIONS
NS-8	VEHICLE & EQUIPMENT CLEANING
NS-9	VEHICLE & EQUIPMENT FUELING
NS-10	VEHICLE & EQUIPMENT MAINTENANCE
NS-12	CONCRETE CURING
NS-13	CONCRETE FINISHING
SE-1	SILT FENCE
SE-4	CHECK DAMS
SE-5	FIBER ROLLS
SE-10	DI PROTECTION TYPE 1
SE-10	DI PROTECTION TYPE 2
SE-10	DI PROTECTION TYPE 3
TC-1	STABILIZED CONSTRUCTION ENTRANCE/EXIT
TC-2	STABILIZED CONSTRUCTION ROADWAY
TC-3	ENTRANCE & OUTLET TIRE WASH
WE-1	WIND EROSION CONTROL
WM-1	MATERIAL DELIVERY & STORAGE
WM-2	MATERIAL USE
WM-3	STOCKPILE MANAGEMENT
WM-8	CONCRETE WASTE MANAGEMENT
WM-9	SANITARY/SEPTIC WASTE MANAGEMENT

0 10 20 30

IDENTIFICATION STAMP
DIV. OF THE STATE ARCHITECT
APP: 01-119994 INC:
REVIEWED FOR
SS ☑ FLS ☑ ACS ☑
DATE: 08/16/2022

QUATTROCCHI KWOK ARCHITECTS
Main:
636 Fifth Street, Santa Rosa, CA 95404
East Bay:
55 Harrison Street, Suite 525,
Oakland, CA 94607
(707) 576-0829

cbg CIVIL ENGINEERS • SURVEYORS • PLANNERS
SAN RAMON • (925) 866-0322
SACRAMENTO • (916) 375-1877
WWW.CBANDG.COM

REGISTERED PROFESSIONAL ENGINEER
JASON D. VOGAN
59299
CIVIL
STATE OF CALIFORNIA

LIBERTY HIGH SCHOOL

NEW CLASSROOM BUILDING

850 2ND STREET
BRENTWOOD, CA
94513

LIBERTY UNION HIGH SCHOOL DISTRICT

REVISIONS

DSA APP NO. 01-119994

ARCH PROJECT NO: 1925.00
DRAWN BY: MJV
DRAWING SCALE: AS SHOWN
PTN: 61721-83 FILE NO: 7-H4

CONSTRUCTION DOCUMENTS

JUNE 24, 2022

SHEET TITLE

EROSION CONTROL PLAN

SHEET NUMBER

C-6.0

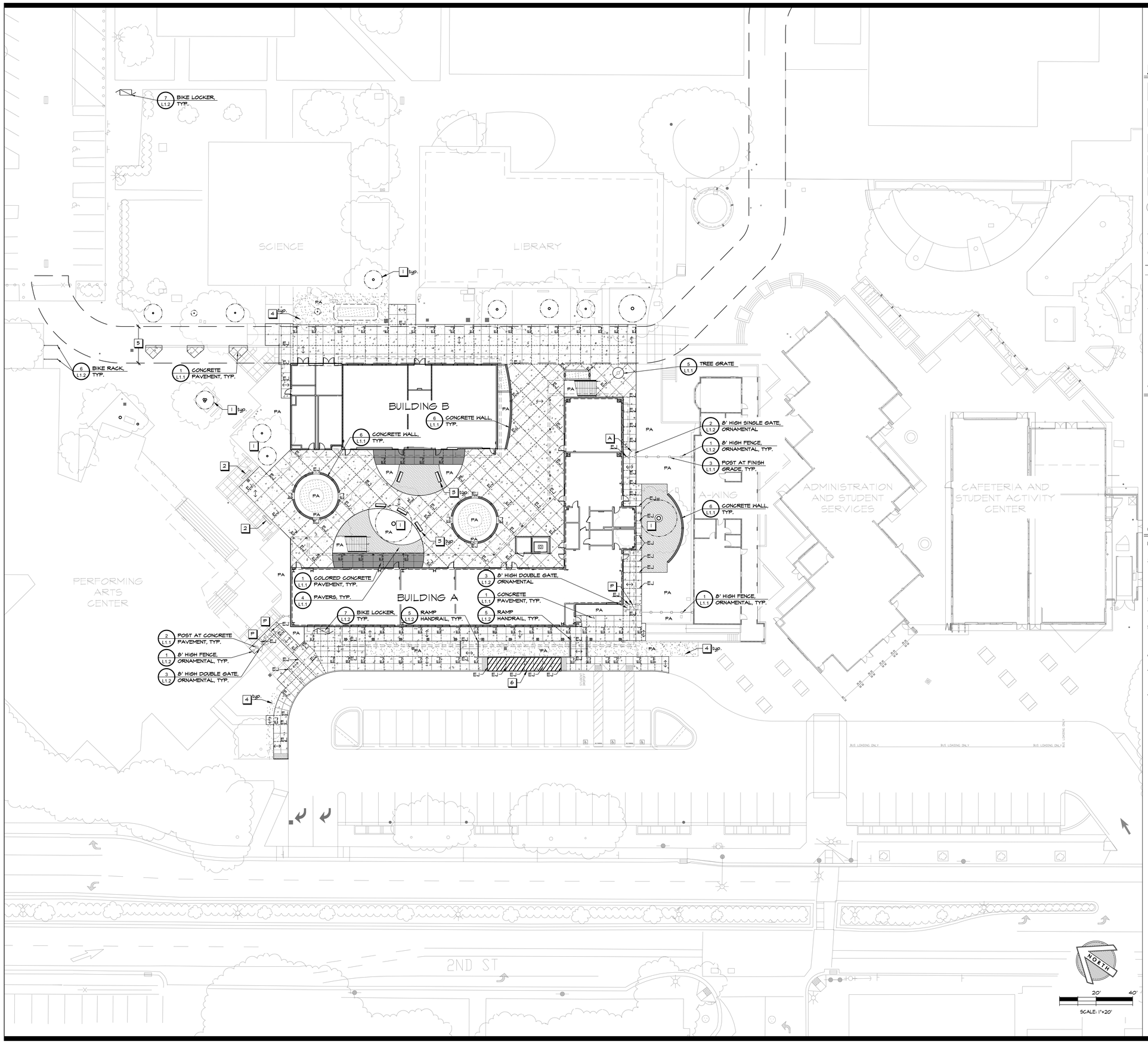

LEGEND

- Concrete Pavement. Concrete shall have a slip resistant broom finish in the direction shown on this sheet.
- Colored Concrete Pavement. Integral color shall be Davis Graphite. 2 lbs. of #BOB-4. Concrete shall have a slip resistant broom finish in the direction shown on this sheet and shall have a clear sealer applied.
- Permeable Pavers
- Turf. See Planting Plan.
- Biofiltration Facilities. See Civil Drawings.
- Existing Tree
  See Tree Protection Specifications on Sheet L4.1
- Critical Radius
  See Tree Protection Specifications on Sheet L4.1
- Concrete Wall
- EJ — Expansion Joint. See Civil Drawings.
- Tooled Control Joint. See Civil Drawings.
- Direction of broom finish
- PA — Planting Area
- 8' High Fence, Ornamental
- 8' High Single Gate, Ornamental
- 8' High Double Gate, Ornamental

P	Panic Hardware Gate
A	Accessible Lever Gate
Refer to General Fencing and Gate Notes and Schedules on L1.2	

SHEET NOTES

1. Existing tree to remain, typ. Comply with Tree Preservation Standards on L4.1.
2. Relocate Existing Bench
3. New Bench (OFCI), typ.
4. Replace turf impacted by project work with new sod, typ.
5. Emergency Vehicle Access. See G-03.
6. Accessible passenger loading zone. See Civil Drawings.

CONCRETE NOTES

1. Subgrade preparation shall be done in accordance with the recommendations in the Geotechnical Report.
2. Tooled control joints shall run continuously and extend through integral curbs and thickened edges. Tooled control joint layout shall be as shown on the Layout Plan, and coincide with the corners of objects, structures and the beginning and ends of curves. Joints should have a minimum depth of 25% of the slab thickness, unless otherwise noted on plans.
3. Expansion joints shall be laid out as shown on the Layout Plan.
4. Contractor shall place 3/8" asphalt impregnated fiber board where new concrete meets building, walls, curbs and planters.
5. The base rock layer, prior to placement of concrete, shall be sprinkled with clean water several times to restore any moisture that may have been lost after completion of compaction.
6. Cure concrete with curing compound or keep continuously moist for a minimum of 7 days.
7. Contractor shall prepare a 4'x4' sample of all flatwork and 4' length of all walls and curb in the field prior to construction, for review and approval by the District.
8. Concrete pavement with slopes less than 6% shall receive a medium broom finish and slopes greater than 6% shall receive a heavy broom finish. Finish shall be in the direction shown on this sheet.

IDENTIFICATION STAMP
DIV. OF THE STATE ARCHITECT
APP: 01-119994 INC:
REVIEWED FOR
SS ☑ FLS ☑ ACS ☑
DATE: 08/16/2022

QUATTROCCHI KWOK ARCHITECTS
Main:
636 Fifth Street, Santa Rosa, CA 95404
East Bay:
55 Harrison Street, Suite 525,
Oakland, CA 94607
(707) 576-0829

GSM landscape architects, inc.
1700 Soscol Ave. Suite 23
Napa, CA 94559
707-255-4630
www.gsmlainc.com

REGISTERED LANDSCAPE ARCHITECT
STEPHEN STRANZ
No. 2790
Exp. 10-31-22
STATE OF CALIFORNIA

LIBERTY HIGH SCHOOL

NEW CLASSROOM BUILDING

850 2ND STREET
BRENTWOOD, CA
94513

LIBERTY UNION HIGH SCHOOL DISTRICT

REVISIONS

DSA APP NO. 01-119994

ARCH PROJECT NO:	1925.00
DRAWN BY:	BTI/HDJ
DRAWING SCALE:	1"=20'
PTN: 61721-83	FILE NO: 7-H4

CONSTRUCTION DOCUMENTS

JUNE 24, 2022

SHEET TITLE

MATERIAL AND DETAIL REFERENCE PLAN

SHEET NUMBER

L1.0

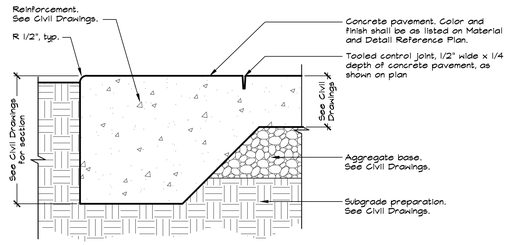

NOTES:

1. See Concrete Notes on the Material and Detail Reference Plan.
2. See Material and Detail Reference Plan for concrete color and finish.
3. See Material and Detail Reference Plan for tooled control joint and expansion joint locations.
4. See Civil Drawings for grading and drainage design and information.

1 CONCRETE PAVEMENT
NOT TO SCALE

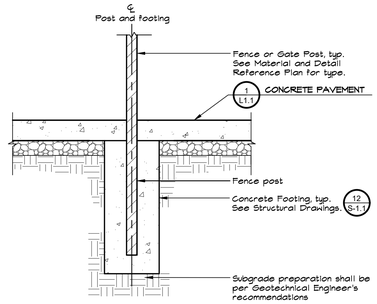

NOTES:

1. See Concrete Notes on the Material and Detail Reference Plan.
2. See Structural Drawings for fence footing design.
3. See General Fencing and Gate Notes and Schedules on Sheet L1.2.

2 POST AT CONCRETE PAVEMENT
NOT TO SCALE

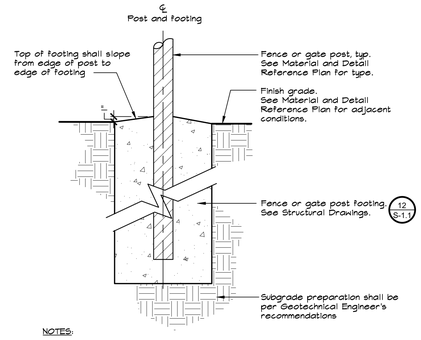

NOTES:

1. See Concrete Notes on the Material and Detail Reference Plan.
2. See Structural Drawings for fence footing design.
3. See General Fencing and Gate Notes and Schedules on Sheet L1.2.

3 POST AT FINISH GRADE
NOT TO SCALE

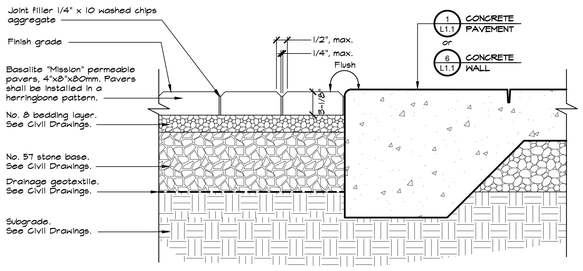

NOTES:

1. Compaction of subgrade will reduce permeability.
2. Paver color shall be "Venice". Contractor shall submit samples to Landscape Architect for review and approval prior to ordering and installation.
3. Pavers are available through Pacific Coast Building Products. Contact is Victor Venuta, (707) 738-7844.
4. Pavers shall be installed per manufacturer recommendations. Contractor shall install a 4'x4' mock up of pavers, on site for review and approval by the Landscape Architect.
5. See Civil Drawings for grading and drainage design and information.
6. Provide and install 3/16"x2-1/4" aluminum paver restraint at edges not adjacent to concrete pavement. Aluminum paver restraint shall be Permaloc Structuredge as manufactured by Permaloc Corporation, or approved equal.

4 PAVERS
NOT TO SCALE

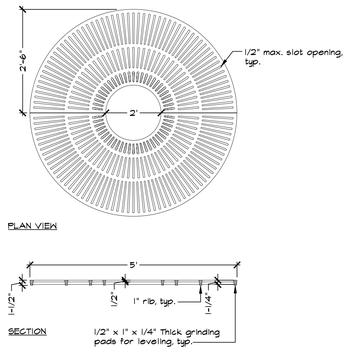

NOTES:

1. Tree Grate shall be IronSmith, ADA, Model #M6059 Sunrise, or approved equal. Contact is Nicole Bonelli Meenan, (530) 272-8005.
2. Tree grate finish shall be zinc metallized.

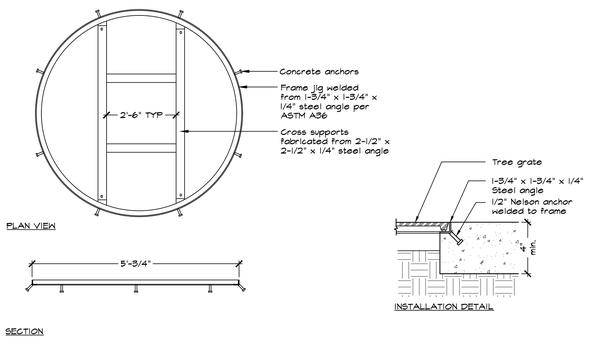

NOTES:

1. Tree Grate Frame shall be IronSmith, Model #M6001F, or approved equal. Contact is Nicole Bonelli Meenan, (530) 272-8005.
2. Frame and Nelson anchors shall be hot dipped galvanized.

5 TREE GRATE
NOT TO SCALE

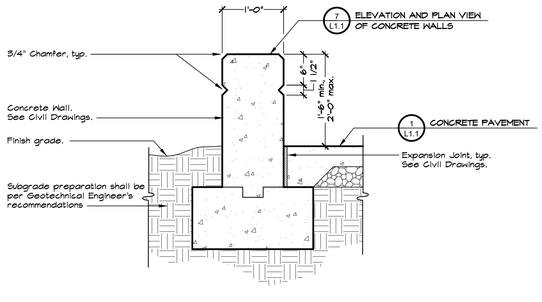

NOTES:

1. See Concrete Notes on the Material and Detail Reference Plan.
2. See Civil Drawings for detailed grading and drainage plans.
3. Provide integral color where noted on the Material and Detail Reference Plan.
4. Hold top of wall level unless otherwise noted on Civil Drawings.
5. Wall finish shall be smooth sack finish on all surfaces and edges.
6. See Civil Drawings for detailed wall, reinforcement and wall drainage design.

6 CONCRETE WALL
NOT TO SCALE

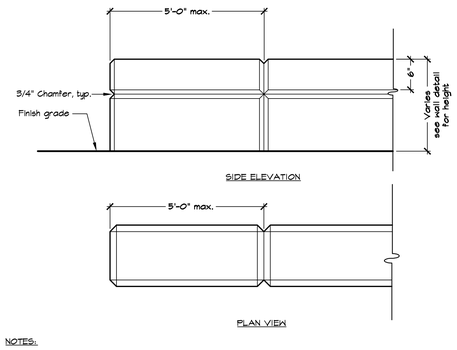

NOTES:

1. See Civil Drawings for reinforcement and expansion joints.

7 ELEVATION AND PLAN VIEW OF CONCRETE WALLS
NOT TO SCALE

IDENTIFICATION STAMP
DIV. OF THE STATE ARCHITECT
APP: 01-119994 INC:
REVIEWED FOR
SS ☑ FLS ☑ ACS ☑
DATE: 08/16/2022

QUATTROCCHI KWOK ARCHITECTS
Main:
636 Fifth Street, Santa Rosa, CA 95404
East Bay:
55 Harrison Street, Suite 525,
Oakland, CA 94607
(707) 576-0829

GSM landscape architects, Inc.
1700 Soscol Ave. Suite 23
Napa, CA 94559
707-255-4630
www.gsmlainc.com

REGISTERED LANDSCAPE ARCHITECT
STEPHEN STRANZL
No. 2790
Exp. 10-31-22
STATE OF CALIFORNIA

LIBERTY HIGH SCHOOL

NEW CLASSROOM BUILDING

850 2ND STREET
BRENTWOOD, CA
94513

LIBERTY UNION HIGH SCHOOL DISTRICT

REVISIONS

DSA APP NO. 01-119994

ARCH PROJECT NO:	1925.00
DRAWN BY:	BTI/HDJ
DRAWING SCALE:	1"=20'
PTN: 61721-83	FILE NO: 7-H4

CONSTRUCTION DOCUMENTS

JUNE 24, 2022

SHEET TITLE

CONSTRUCTION DETAILS

SHEET NUMBER

L1.1

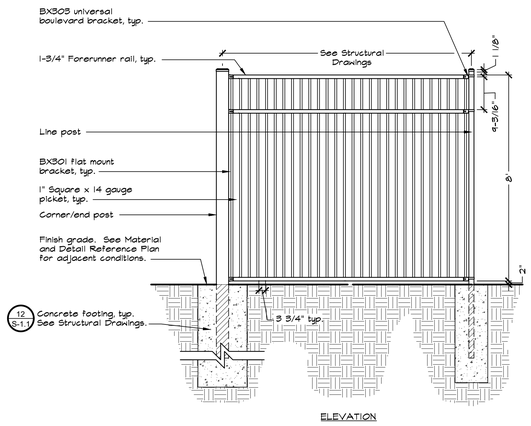

NOTES:

1. See General Fencing and Gate Notes and Schedules on this Sheet.
2. See Material and Detail Reference Plan and Layout Plan for post locations.
3. See Structural Drawings for post and footing information.
4. Fence shall be Aegis II Majestic and 3-3/4" picket gap, manufactured by Ameristar, or approved equal. Contact Ed Carini, (510) 552-8605 / (888) 333-8422.
5. Fence shall be black in color to match Ameristar standard black finish.
6. Contractor shall provide 1 gallon of touch up paint from Manufacturer to match black color.

1 8' HIGH FENCE, ORNAMENTAL
NOT TO SCALE

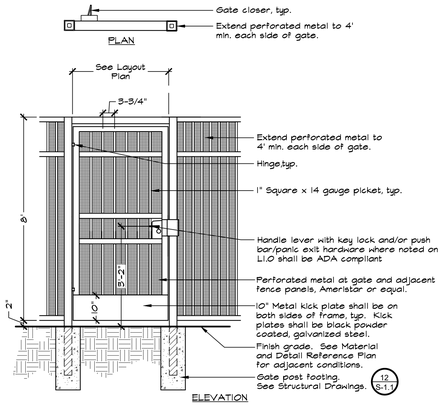

NOTES:

1. See General Fencing and Gate Notes and Schedules on this Sheet.
2. See Material and Detail Reference Plan and Layout Plan for post locations.
3. See Structural Drawings for post and footing information.
4. Door opening shall provide clear width of 32 inches minimum, CBC 11B-404.2.3.
5. Gate shall be black in color to match Ameristar standard black finish.
6. Contractor shall provide 1 gallon of touch up paint from Manufacturer to match black color.

2 8' HIGH SINGLE GATE, ORNAMENTAL
NOT TO SCALE

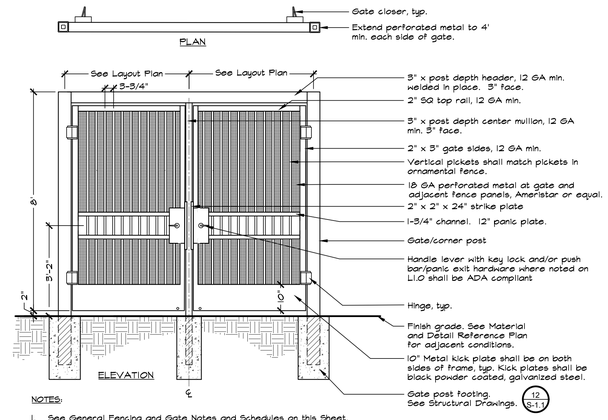

NOTES:

1. See General Fencing and Gate Notes and Schedules on this Sheet.
2. See Material and Detail Reference Plan and Layout Plan for post locations.
3. See Structural Drawings for post and footing information.
4. Door opening shall provide clear width of 32 inches minimum, CBC 11B-404.2.3
5. Gate shall be black in color to match Ameristar standard black finish.
6. Contractor shall provide 1 gallon of touch up paint from Manufacturer to match black color.

3 8' HIGH DOUBLE GATE, ORNAMENTAL
NOT TO SCALE

GENERAL FENCING AND GATE NOTES AND SCHEDULES

1. Details are for general reference. Contractor shall provide shop drawings prior to construction for approval by the District. Contractor shall include all hardware types and manufacturers' information within shop drawings.
2. (F) Designated gates shown on L1.0 shall be accessible, have push bar and lockable lever with cylinder dogging, push pad armor, push bar with trim, weep holes and keyed lever; all in stainless steel finish. Von Duprin, or equal, product number: CD x AX x PA x 98L x WH x 996L-NL x 630. Lock shall have an interchangeable large format lock, cylinder dogging and night latch feature. Schlage Lock product number: 20-057 D124 (996L) and 20-061 D124 x XQ11-948 630 (CD). Contact Debbie White at Allegion for ordering information. (925) 463-7102, Debbie.White@allegion.com.
3. (A) Designated gates shown on L1.0 shall be accessible and have levers with Vandlgard Classroom Locks in satin chrome finish. Schlage, or equal, product number; ND95JD RHO 626 with interchangeable format lock. Schlage lock product number: 23-030-D124. Contact Debbie White at Allegion for ordering information. (925) 463-7102, debbie.white@allegion.com.
4. Panic exit hardware shall comply with CBC 1010.10 Panic Hardware: Exit devices are required to unlatch with a maximum 5 lbs. force per 11B-404.2.7 and 11B-309.4. Exit devices are required to comply with SFM Standard 12-10-302. (Cross bars shall extend across not less than one-half of the door/gate. The ends of the cross-bar shall be curved, guarded or otherwise designed to prevent catching on the clothing of persons during egress.
5. Gates with closers shall include LCN 4040XP closer with MKH-100 hinges, or approved equal. Hardware shall match gate finish.
6. See Concrete Notes on Sheet L1.0.
7. See Structural Drawings for post and footing information.
8. Subgrade preparation shall be per Geotechnical Engineer's recommendations.

Fence Schedule	
Description	8' High Ornamental Fence
Detail Reference	1 / L1.2
Line Post	12 / S-1.1
Corner/ End Post	12 / S-1.1
Footing Size	12 / S-1.1

Gate Schedule		
Description	8' High Single Gate, Ornamental	8' High Double Gate, Ornamental
Detail Reference	2 / L1.2	3 / L1.2
Gate Post	12 / S-1.1	12 / S-1.1
Gate Frame	2" sq x 11 GA	See Detail
Footing Size	12 / S-1.1	12 / S-1.1

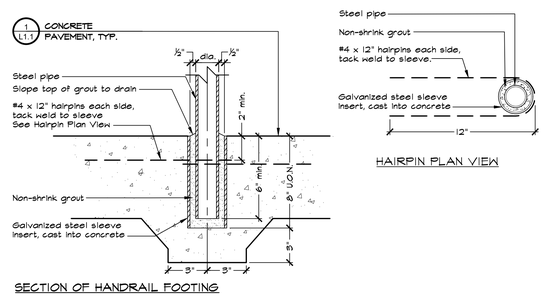

4 RAILING FOOTING
NOT TO SCALE

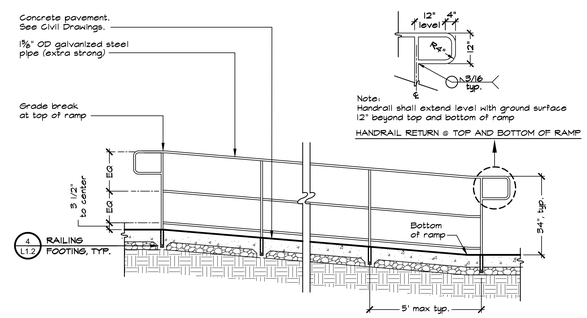

NOTES:

1. Handrail shall be manufactured from steel pipe, and then hot-dipped galvanized. All joints shall be fully welded and sanded smooth before hot-dipping the handrail.
2. District shall review and approve handrail in place prior to grouting.
3. See Material and Detail Reference Plans for handrail locations.

5 RAMP HANDRAIL
NOT TO SCALE

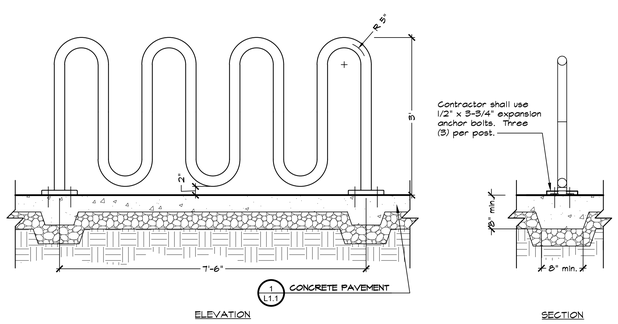

NOTES:

1. Bike Rack shall be DuMor Series 130-40HS, hot-dipped galvanized, 4 peaks, or approved equal. Contact Jon Bowden at Ross Recreation Equipment Co. (530) 342-2860.
2. Installation shall be per manufacturer's specifications.

6 BIKE RACK
NOT TO SCALE

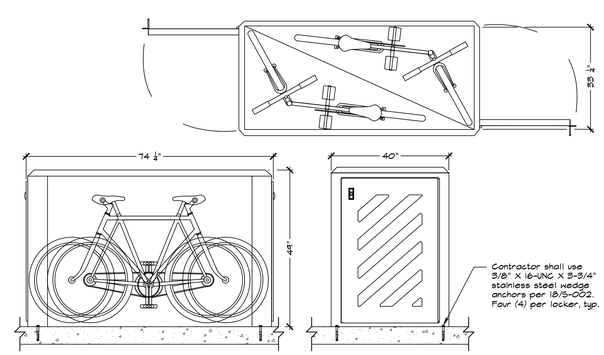

NOTES:

1. Bike Locker shall be Ground Control Systems Fiberglass Bicycle Vault, Bike Locker-FBV2, Leather (Tan) UV stable color, fire retardant composite finish, closed door and padlock handle, or approved equal. Available through Ground Control Systems, (800) 630-7225, info@groundcontrolsystems.com.
2. Installation shall be per manufacturer's specifications.

GROUND CONTROL SYSTEMS

7 BIKE LOCKER
NOT TO SCALE

IDENTIFICATION STAMP
DIV. OF THE STATE ARCHITECT
APP: 01-119994 INC:
REVIEWED FOR
SS ☑ FLS ☑ ACS ☑
DATE: 08/16/2022

QUATTROCCHI KWOK ARCHITECTS
Main:
636 Fifth Street, Santa Rosa, CA 95404
East Bay:
55 Harrison Street, Suite 525,
Oakland, CA 94607
(707) 576-0829

GSM landscape architects, Inc.
1700 Soscol Ave. Suite 23
Napa, CA 94559
707-255-4630
www.gsmlainc.com

REGISTERED LANDSCAPE ARCHITECT
JOHN STRANZL
No. 2790
Exp. 10-31-22
STATE OF CALIFORNIA

LIBERTY HIGH SCHOOL

NEW CLASSROOM BUILDING

850 2ND STREET
BRENTWOOD, CA
94513

LIBERTY UNION HIGH SCHOOL DISTRICT

REVISIONS

DSA APP NO. 01-119994

ARCH PROJECT NO:	1925.00
DRAWN BY:	BTI/HDJ
DRAWING SCALE:	1"=20'
PTN: 61721-83	FILE NO: 7-H4

CONSTRUCTION DOCUMENTS

JUNE 24, 2022

SHEET TITLE

CONSTRUCTION DETAILS

SHEET NUMBER

L1.2

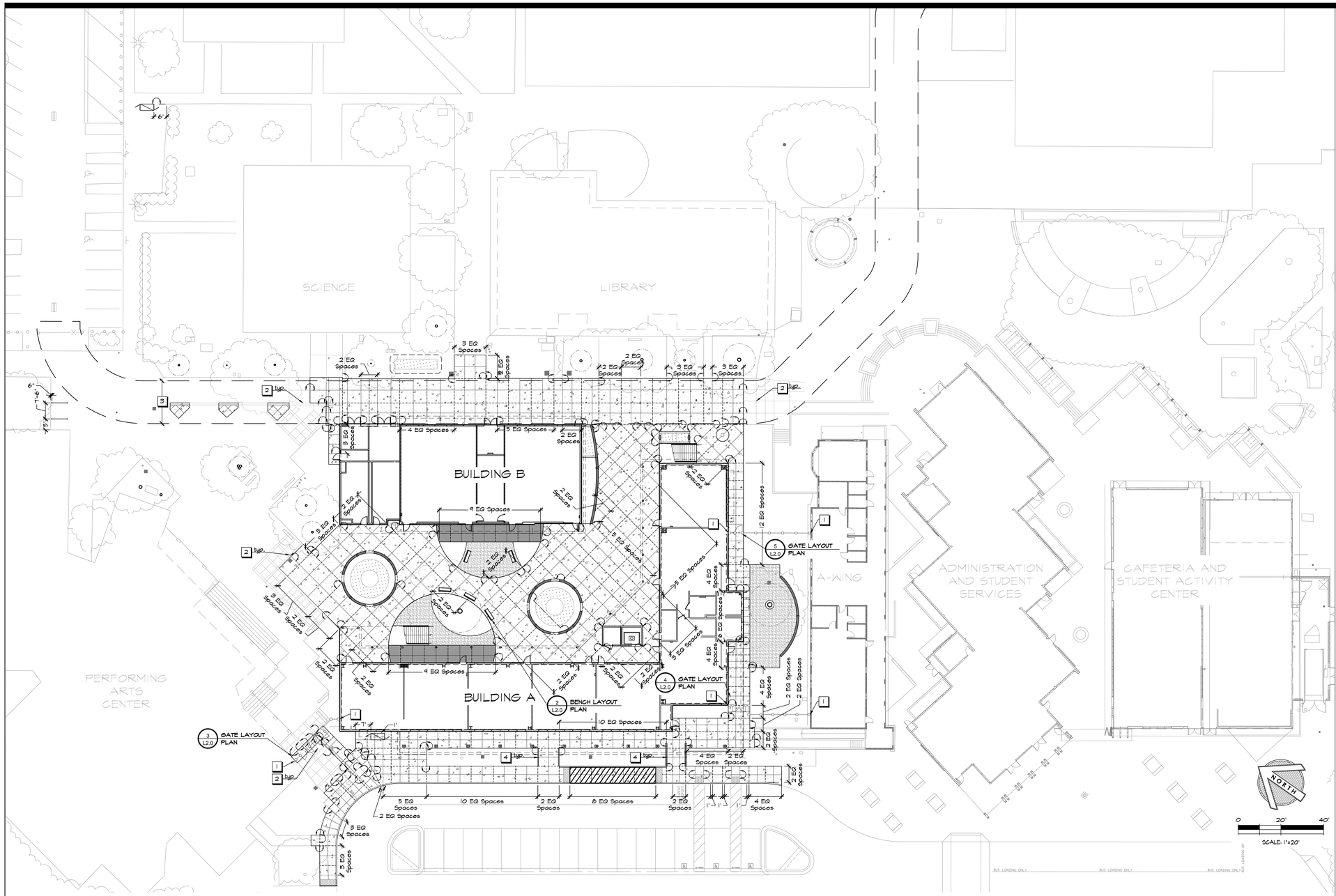

1 LAYOUT PLAN
SCALE: 1"=20'

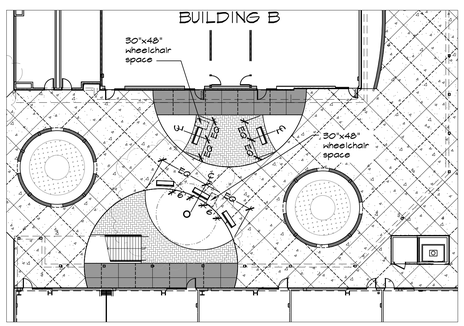

2 BENCH LAYOUT PLAN
SCALE: 1"=20'

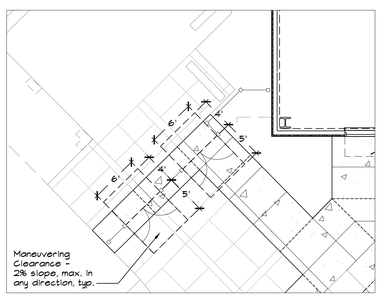

NOTES:
1. Gates shall comply with Maneuvering Clearances 2019 C.B.C. 11B-404.2.4.1.

3 GATE LAYOUT PLAN
SCALE: 1/8"=1'-0"

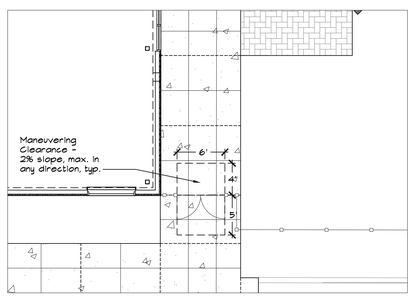

NOTES:
1. Gates shall comply with Maneuvering Clearances 2019 C.B.C. 11B-404.2.4.1.

4 GATE LAYOUT PLAN
SCALE: 1/8"=1'-0"

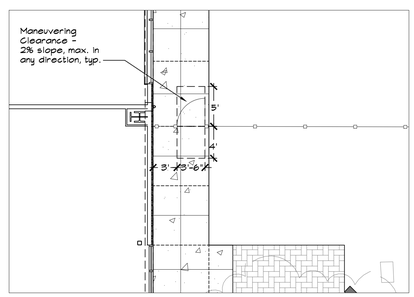

NOTES:
1. Gates shall comply with Maneuvering Clearances 2019 C.B.C. 11B-404.2.4.1.

5 GATE LAYOUT PLAN
SCALE: 1/8"=1'-0"

KEY NOTES

1. Clearance shall be less than 4", typ.
2. Existing score joints. Verify in field.
3. Emergency Vehicle Access. See G-0.3.
4. Provide 3" clearance between handrail post and edge of concrete, typ.

LAYOUT LEGEND

- R X'-Y" — Radial Dimension
- X° — Arc Dimension
- X" — Linear Dimension
- Align
- Guideline to show alignment
- EQ — Equal
- Centerline
- MA — Midpoint of Arc
- PT — Point of Tangency
- Clr — Clear Opening
- 90 Degree Angle
- Control Points: a. Center of Circular Steps

LAYOUT NOTES

1. Contractor shall notify all public or private utility companies two (2) working days prior to commencement of work on this project to verify the locations of existing utility lines. Call Underground Service Alert (U.S.A.) toll free at 1-800-227-2600 or 811, 7:00am to 5:00pm, Monday through Friday.
2. All coordinates and dimensions shown are in a horizontal plane.
3. Written dimensions always take precedence over scaled dimensions. If there is a conflict, notify the Architect and obtain a clarification. No deviation or substitution shall be allowed without obtaining written approval from the Architect.
4. See Civil Drawings for additional layout information.
5. This Plan does not represent a Property Line Survey. Property lines shown hereon may not represent the true position of the line.
6. The Contractor shall coordinate all construction elements including utility locations and required sleeving prior to installation of any underground utilities.
7. The Contractor shall verify critical dimensions, reference and control point locations and construction conditions prior to construction.
8. All dimensions shall be verified in the field, chalked painted, and/or string lined. Any minor adjustments required to achieve overall design layout shall be reviewed and approved by the Architect prior to construction.
9. All materials shall be furnished and installed by the Contractor per Manufacturer's specifications, unless otherwise noted in these Plans or Specifications.
10. Existing features and topographic information have been taken from Survey performed by Carlson, Barbee & Gibson, Inc. on June 14, 2018 provided by Quattrocchi Kwok Architects. GSM landscape architects, Inc. assumes no liability, real or alleged, regarding the accuracy of the existing features or topographic information shown.

IDENTIFICATION STAMP
DIV. OF THE STATE ARCHITECT
APP: 01-119994 INC:
REVIEWED FOR
SS ☑ FLS ☑ ACS ☑
DATE: 08/16/2022

QUATTROCCHI KWOK ARCHITECTS
Main:
636 Fifth Street, Santa Rosa, CA 95404
East Bay:
55 Harrison Street, Suite 525,
Oakland, CA 94607
(707) 576-0829

GSM landscape architects, inc.
1700 Soscol Ave. Suite 23
Napa, CA 94559
707-255-4630
www.gsmlainc.com

REGISTERED LANDSCAPE ARCHITECT
STEPHEN STRANZ
No. 2790
Exp. 10-31-22
STATE OF CALIFORNIA

LIBERTY HIGH SCHOOL

NEW CLASSROOM BUILDING

850 2ND STREET
BRENTWOOD, CA
94513

LIBERTY UNION HIGH SCHOOL DISTRICT

REVISIONS

DSA APP NO. 01-119994

ARCH PROJECT NO:	1925.00
DRAWN BY:	BTI/HDJ
DRAWING SCALE:	1"=20'
PTN: 61721-83	FILE NO: 7-H4

CONSTRUCTION DOCUMENTS

JUNE 24, 2022

SHEET TITLE

LAYOUT PLAN

SHEET NUMBER

L2.0

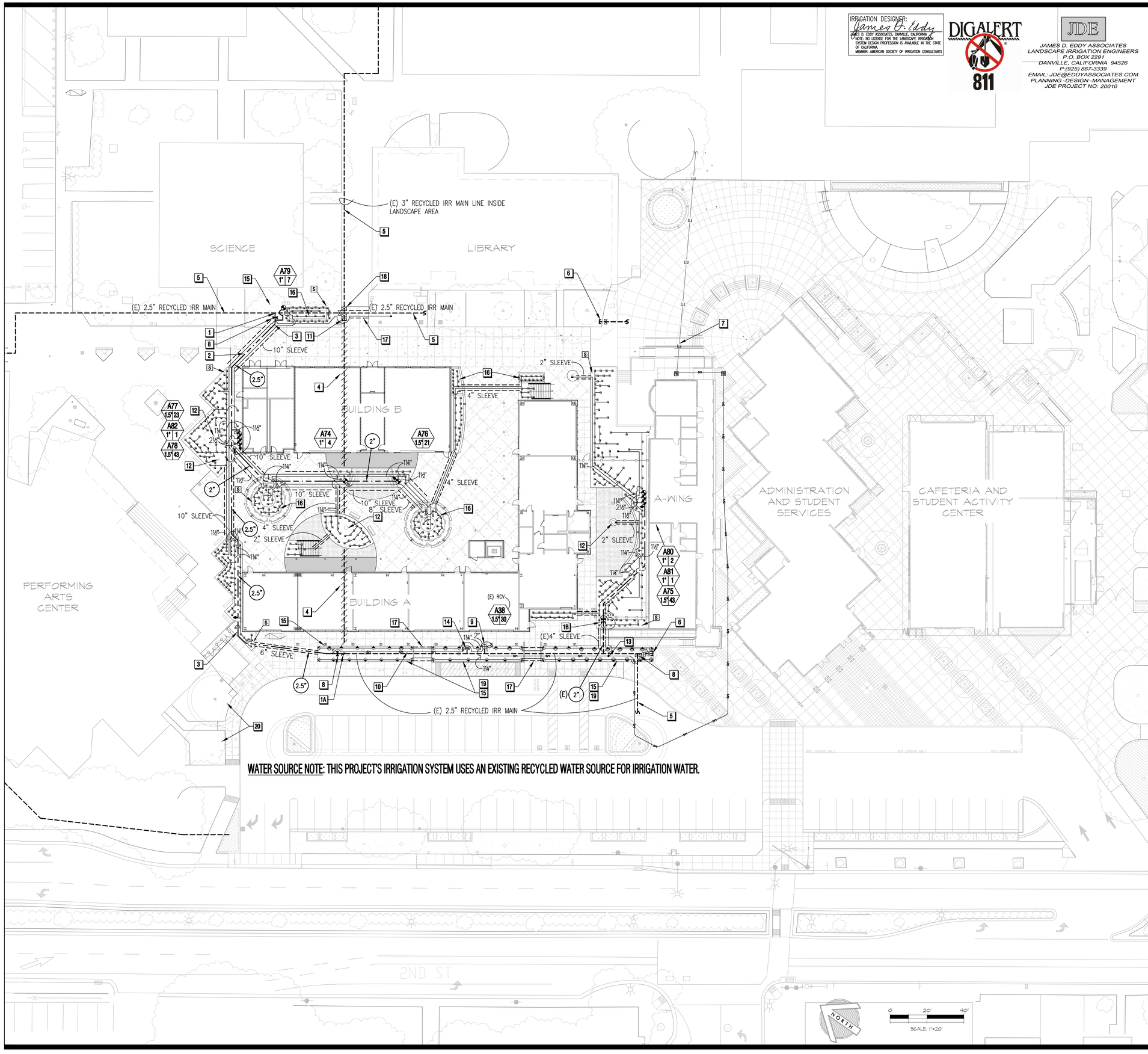

WATER SOURCE NOTE: THIS PROJECT'S IRRIGATION SYSTEM USES AN EXISTING RECYCLED WATER SOURCE FOR IRRIGATION WATER.

IRRIGATION DESIGNER:
James D. Eddy
JAMES D. EDDY ASSOCIATES, DANVILLE, CALIFORNIA
NOTE: NO LICENSE FOR THE LANDSCAPE IRRIGATION SYSTEM DESIGN PROFESSION IS AVAILABLE IN THE STATE OF CALIFORNIA.
MEMBER: AMERICAN SOCIETY OF IRRIGATION CONSULTANTS

DIGALERT 811

JDE

JAMES D. EDDY ASSOCIATES
LANDSCAPE IRRIGATION ENGINEERS
P.O. BOX 2291
DANVILLE, CALIFORNIA 94526
P:(925) 867-3339
EMAIL: JDE@EDDYASSOCIATES.COM
PLANNING-DESIGN-MANAGEMENT
JDE PROJECT NO: 20010

SHEET NOTES

1. POC #1: CONNECT (N) 2.5" IRR MAIN LINE TO (E) 2.5" RECYCLED WATER IRR PVC MAIN LINE PIPE LOCATED IN THIS APPROXIMATE LOCATION. LOCATE EXACT LOCATION OF THE (E) 2.5" IRR MAIN LINE IN THE FIELD.

1A. POC #2: CONNECT (N) 2.5" IRR MAIN LINE TO (E) 2.5" RECYCLED WATER IRR PVC MAIN LINE PIPE LOCATED IN THIS APPROXIMATE LOCATION. LOCATE EXACT LOCATION OF THE (E) 2.5" IRR MAIN LINE IN THE FIELD.

1B. POC #3: (E) 2" CAPPED RECYCLED WATER IRR PVC MAIN LINE PIPE LOCATED IN THIS APPROXIMATE LOCATION. LOCATE EXACT MAIN LINE LOCATION IN THE FIELD.

2. (N) RECYCLED WATER IRR PVC MAIN LINE PIPE CROSSES AN (E) 2" POTABLE WATER LINE. MAINTAIN THE SPECIFIED CLEARANCE. THIS CONDITION IS APPLICABLE TO ANY IRRIGATION MAIN LINE CROSSING OVER A (N) OR (E) POTABLE WATER PIPE.

3. (N) RECYCLED WATER IRR PVC MAIN LINE PIPE ROUTING.

4. DEMOLISH (E) IRR MAIN LINE AS SHOWN. CUT AND ABANDON (E) IRR CONTROL WIRE. SPLICE TO (E) CONTROL WIRE IN UNDISTURBED LANDSCAPE AREA AND INSTALL (N) CONTROL WIRE TO (E) SOLENOID CONTROLLED RCVS AS REQUIRED TO KEEP (E) IRR IN SERVICE. TRENCHING THROUGH (E) LANDSCAPE MAY BE REQUIRED. IF SO, REPAIR DAMAGED (E) LANDSCAPE MATERIAL DUE TO TRENCHING TO MATCH (E) LANDSCAPE PER THE LANDSCAPE DRAWINGS AND SPECIFICATIONS.

5. (E) RECYCLED WATER IRR PVC MAIN LINE PIPE TO REMAIN IN SERVICE.

6. (E) MAIN LINE STUB WITH 2-WIRE CONTROL CABLE FROM (E) CONTROLLER "A" FOR FUTURE USE.

7. (E) 2-WIRE CABLE INSTALLED IN (E) ELECTRICAL CONDUIT FROM (E) CONTROLLER "A" LOCATED AT THE FIELD. RCVS SHALL BE CONTROLLED FROM (E) CONTROLLER "A" AND THE ASSOCIATED (E) MAIN CONTROL VALVE AND (E) FLOW SENSOR LOCATED AT THE RECYCLED WATER POC IN THE FIELD AREA. REFER TO FIELD IRR IMPROVEMENT DRAWINGS AND SEE (E) FIELD CONTROLLER "A" AT SITE. NOTE OF CAUTION: DUE TO SIGNAL INTERFERENCE, DO NOT ROUTE THE 2-WIRE CABLE INSIDE CONDUIT WITH OTHER ELECTRICAL CABLING. CONDUIT MUST BE DEDICATED FOR THE 2-WIRE CABLE. FIELD DETERMINE IF THIS IS POSSIBLE, CONFER WITH THE ARCHITECT AS NEEDED. REFER TO ADMINISTRATION BUILDING AND FIELD IRR IMPROVEMENT DRAWINGS FOR DETAILS.

8. SHUT DOWN (N) OR (E) GATE VALVE DURING DEMOLITION AND PRIOR TO IRRIGATION CONSTRUCTION.

9. (E) 1.5" TURF SPRAY RCV WITH (E) 2-WIRE CABLE FROM CONTROLLER "A" LOCATED IN THE FIELD. SPLICE TO 2-WIRE CABLE AND EXTEND 2-WIRE CABLE TO (N) CONTRACT WORK AREA. REUSE RCV FOR TURF ZONE REBUILD.

10. EXTEND 2-WIRE CABLE TO (N) CONTRACT WORK AREA. REPAIR DAMAGED (E) LANDSCAPE MATERIAL DUE TO TRENCHING TO MATCH (E) LANDSCAPE PER THE LANDSCAPE DRAWINGS AND SPECIFICATIONS

11. CUT AND CAP (E) MAIN LINE BELOW GRADE. REMOVE (E) SHUT OFF VALVE.

12. (E) TREE, TYPICAL. COMPLY WITH TREE PRESERVATION STANDARDS, REFER TO LANDSCAPE DRAWINGS. ADD TREE BUBBLER IRRIGATION WHERE INDICATED, WITHOUT DAMAGE TO (E) ROOT SYSTEM, OR WHERE NOT INDICATED, SURROUNDING SHRUB BUBBLERS WILL PROVIDE IRR TO (E) TREE ROOTZONE.

13. LOCATE (E) 2-WIRE CABLE BELOW GRADE, SPLICE TO THE 2-WIRE CABLE, PLACE SPLICES IN A PULL BOX, AND EXTEND (N) 2-WIRE CABLE TO (N) CONTRACT WORK AREA RCVS, THREE RCVS (3) TOTAL.

14. (E) CAPPED IRR MAIN LINE TO REMAIN, AS-IS. LOCATE EXACT CAPPED MAIN LINE LOCATION IN THE FIELD.

15. (E) TURF SPRAY ZONE(S): DUE TO (N) WALK CONSTRUCTION, TREE REMOVAL, AND GRADE CHANGES, REBUILD TURF SPRAY ZONE WITH (N) LATERAL LINE PIPE, (N) HEAD SPACING, USE (N) SPECIFIED 6" POP-UP HEADS. ADJUST NOZZLES TO PROVIDE 100% UNIFORM IRR COVERAGE TO THE (E) LANDSCAPE AREA. NO OVERSPRAY ON PAVED SURFACES. REPAIR DAMAGED (E) LANDSCAPE MATERIAL PER THE LANDSCAPE PLANS. ADJUST (E) VALVE BOXES TO MATCH THE NEW GRADE. REFER TO 6" POP-UP SPRAY DETAIL FOR HEAD CONSTRUCTION. SOME HEADS AND LATERAL PIPE MAY BE SALVAGEABLE FOR REUSE.

16. BIOINFILTRATION FACILITIES. SEE CIVIL DRAWINGS.

17. (N) PAVED WALK: CONFIRM LOCATION AND SIZE OF (E) IRR MAIN LINE LOCATED UNDER THE (N) WALK SLAB, IN THE FIELD: PRIOR TO POUR OF CONCRETE WALK, EXCAVATE THE (E) MAIN LINE UNDER THE FUTURE WALK AREA. INSTALL A SLEEVE AROUND THE (E) MAIN LINE AND (N) LATERAL PIPES AS FOLLOWS: USE A CLASS 315 PVC SLEEVE, 6" DIA. OR AS NEEDED, CUT SLEEVE IN TWO HALVES, LENGTHWISE. SLIDE ONE SLEEVE HALF UNDER THE (E) MAIN LINE, (N) OR (E) LATERAL PIPE, (N) OR (E) STANDARD WIRE BUNDLE OR 2-WIRE WIRE CABLE, AND ON FIRM GROUND. PLACE THE OTHER SLEEVE HALF ON TOP OF THE BOTTOM SLEEVE HALF. SECURE THE SLEEVE HALVES TOGETHER WITH ADJUSTABLE 304 STAINLESS STEEL HOSE CLAMPS, CLAMP SIZE AS REQUIRED, FOUR (4) TOTAL. INSTALL AND TIGHTEN THE FOUR (4) CLAMPS, EVENLY SPACED ALONG SLEEVE TO HOLD THE SLEEVE TOGETHER. APPLY SOLVENT WELD GLUE TO SAW JOINTS AT OUTSIDE OF SLEEVE. DO NOT ALLOW GLUE ON THE CLAMPS. AFTER SOLVENT CEMENT HAS CURED, POUR SAND UNDER THE BOTTOM SLEEVE HALF AND ADJUST SLEEVE TO CORRECT POSITION.

18. (E) GATE VALVES INSIDE LANDSCAPE AREA, CONFIRM IN THE FIELD.

19. PROTECT (E) IRR MAIN LINE AND (E) 2-WIRE CABLE (WHERE APPLICABLE) DURING TREE REMOVAL AND GRADING PROCEDURES.

20. (E) TURF SPRAY ZONE: DUE TO (N) WALK CONSTRUCTION AND GRADE CHANGES, REBUILD ZONE. ADD, MOVE, AND/OR ADJUST HEADS: USE (N) SPECIFIED 6" POP-UP HEADS. INSTALL THE REQUIRED NOZZLES AND ADJUST NOZZLES TO PROVIDE 100% UNIFORM IRR COVERAGE TO THE (E) LANDSCAPE AREA. NO OVERSPRAY ON PAVED SURFACES. REPAIR DAMAGED (E) LANDSCAPE MATERIAL PER THE LANDSCAPE PLANS.

IDENTIFICATION STAMP
DIV. OF THE STATE ARCHITECT
APP: 01-119994 INC:
REVIEWED FOR
SS ☑ FLS ☑ ACS ☑
DATE: 08/16/2022

QUATTROCCHI KWOK ARCHITECTS
Main:
636 Fifth Street, Santa Rosa, CA 95404
East Bay:
55 Harrison Street, Suite 525,
Oakland, CA 94607
(707) 576-0829

GSM landscape architects, inc.
1700 Soscol Ave. Suite 23
Napa, CA 94559
707-255-4630
www.gsmlainc.com

REGISTERED LANDSCAPE ARCHITECT
GREEN STRANGE
No. 2790
Exp. 10-31-22
STATE OF CALIFORNIA

LIBERTY HIGH SCHOOL

NEW CLASSROOM BUILDING

850 2ND STREET
BRENTWOOD, CA
94513

LIBERTY UNION HIGH SCHOOL DISTRICT

REVISIONS

DSA APP NO. 01-119994

ARCH PROJECT NO:	1925.00
DRAWN BY:	JDE/ST
DRAWING SCALE:	1"=20'
PTN: 61721-83	FILE NO: 7-H4

CONSTRUCTION DOCUMENTS

JUNE 24, 2022

SHEET TITLE

IRRIGATION PLAN

SHEET NUMBER

L3.0

IRRIGATION INSTALLATION NOTES

REFER TO IRRIGATION SPECIFICATIONS FOR DETAILED INFORMATION.
LUHSD = LIBERTY UNION HIGH SCHOOL DISTRICT

1. THE (E) IRRIGATION MAIN LINE ROUTING AND VALVE LOCATIONS HAVE BEEN TAKEN FROM AN ARCHIVED DISTRICT IRRIGATION DESIGN PLAN (CIRCA 1990) AND PAST SURVEY DRAWINGS. NO FIELD OR AERIAL SURVEY FOR IRRIGATION CONDITIONS WAS COMPLETED FOR OR PRIOR TO THIS DESIGN WORK. CONFIRM THE ACTUAL MAIN LINE AND VALVE LOCATIONS IN THE FIELD. THIS CONTRACT WORK SHALL FIELD EXAMINE AND SURVEY THE EXISTING IRRIGATION CONDITIONS.
2. PROVIDE INSTALLATION BY PERSONS FAMILIAR WITH IRRIGATION WORK AND UNDER THE SUPERVISION OF A QUALIFIED SUPERVISOR.
3. OBTAIN THE PERMITS REQUIRED AND PROVIDE LABOR AND MATERIALS NECESSARY TO FULLY COMPLETE THE WORK IN ACCORDANCE WITH THE DRAWINGS AND THE SPECIFICATIONS.
4. LOCATE AND PROTECT NEW AND EXISTING UTILITIES PRIOR TO EXCAVATION. DO NOT DAMAGE EXISTING UTILITIES, PAVING OR STRUCTURES. PROVIDE THE NECESSARY REPAIRS AT NO ADDITIONAL COST TO LUHSD.
5. REMOVE DEBRIS AND ACCUMULATION OF DEBRIS AS A RESULT OF IRRIGATION CONSTRUCTION FROM THE SITE AND LEAVE AREA IN A CLEAN CONDITION ACCEPTABLE TO LUHSD. MAINTAIN SITE FOR THE SPECIFIED CALENDAR DAYS (SEE LANDSCAPE DRAWINGS) FOLLOWING ACCEPTANCE OF THE WORK BY LUHSD AND MAKE CORRECTIONS OR REPAIRS TO THE IRRIGATION AS DIRECTED BY LUHSD AT THE COMPLETION OF THE MAINTENANCE PERIOD.
6. THE DRAWINGS ARE DIAGRAMMATIC! BE AWARE OF THE FOLLOWING CONDITIONS WHILE REFERRING TO AND USING THESE DRAWINGS FOR BIDDING AND DURING ACTUAL CONSTRUCTION:
   - (E) UTILITIES SUCH AS WATER LINES TO BUILDINGS AND DRINKING FOUNTAINS, SEWER LINES, DRAINAGE LINES, HIGH VOLTAGE ELECTRICAL LINES AND BOXES, TELEPHONE LINES, TV CABLE, FIBER OPTIC CABLING, AND OTHER (E) UTILITIES. NOTIFY USA (811), REFER TO ARCHIVE UTILITY DRAWINGS, AND CONFER WITH THE DISTRICT.
   - LOCATE AND PROTECT (N) AND (E) UTILITIES PRIOR TO EXCAVATION AND TRENCHING. DO NOT DAMAGE (E) UTILITIES, PAVING OR STRUCTURES. DAMAGE REPAIR SHALL BE PROVIDED BY THE CONTRACTOR AT NO ADDITIONAL COST TO THE PROJECT OR LUHSD.
   - PIPE AND EQUIPMENT MAY BE SHOWN IN PAVING FOR CLARITY OF DRAWING THE PLAN ONLY. INSTALL PIPING AND EQUIPMENT IN PLANTING AREAS. INSTALL RCV'S AND VALVES IN LOCATIONS THAT ARE AWAY FROM GATES AND OUT OF PEDESTRIAN LINE OF TRAFFIC.
   - DUE TO THE SCALE OF THE DRAWINGS, ALL OFFSETS, FITTINGS, SLEEVES, ETC. WHICH MAY BE REQUIRED MAY NOT BE INDICATED. COORDINATE AND INSTALL THESE ITEMS DURING CONSTRUCTION AS REQUIRED.
   - PRIOR TO BID AND START OF CONSTRUCTION, INVESTIGATE THE STRUCTURAL AND ACTUAL CONDITIONS IN THE FIELD WHICH MAY AFFECT THE CONTRACT WORK INCLUDING OBSTRUCTIONS, GRADE DIFFERENCES, OR AREA DIFFERENCES WHICH MAY HAVE NOT BEEN CONSIDERED IN THE ENGINEERING OR MAY BE CONSTRUCTION RELATED. WHERE (E) FIELD CONDITIONS MAY AFFECT THE CONTRACT WORK, COORDINATE ACCORDINGLY BY NOTIFICATION AND APPROVAL OF LUHSD. PROVIDE A SHOP DIAGRAM CREATED BY THE CONTRACTOR'S DRAFTER TO SHOW THE INTENDED CONSTRUCTION WHICH VARIES FROM THE DRAWINGS.
7. COORDINATE IRRIGATION CONTRACT WORK WITH ALL APPLICABLE CONTRACTORS AS FOLLOWS:
   - LOCATION AND INSTALLATION OF PIPE AND LOW VOLTAGE WIRE WHICH MAY AFFECT ANOTHER CONTRACTOR'S WORK (WHEN NECESSARY TO COORDINATE).
   - LOCATION AND INSTALLATION OF CONDUIT AND/OR SLEEVES THROUGH OR UNDER WALLS, ROADWAYS, PAVING, STRUCTURE, ETC. BEFORE CONSTRUCTION.
   - ASSUME FULL RESPONSIBILITY AT NO ADDITIONAL EXPENSE TO THE PROJECT OR LUHSD FOR REQUIRED REVISIONS TO CONSTRUCTION IF THESE NOTIFICATIONS ARE NOT COORDINATED AND COMPLETED.
7. AT THE END OF CONSTRUCTION, PROVIDE RECORD DRAWINGS AS PER THE IRRIGATION SPECIFICATIONS SHOWING THE FINAL LOCATIONS AND MEASUREMENTS OF IRRIGATION EQUIPMENT FOR APPROVAL BY LUHSD AND THE ARCHITECT.
8. THE INTENT OF THIS IRRIGATION SYSTEM DESIGN IS TO PROVIDE THE MINIMUM AMOUNT OF WATER REQUIRED TO SUSTAIN GOOD PLANT HEALTH.
9. PROGRAM THE CONTROLLER TO PROVIDE THE MINIMUM AMOUNT OF WATER NEEDED TO SUSTAIN GOOD PLANT HEALTH. MAKE ADJUSTMENTS TO THE PROGRAM FOR SEASONAL WEATHER CHANGES, PLANT MATERIAL, WATER REQUIREMENTS, MOUNDS AND SLOPES, SUN, SHADE AND WIND EXPOSURES.
10. THE IRRIGATION SYSTEM IN THIS CONTRACT WORK AREA IS DESIGNED FOR 1 VALVE TO OPERATE AT ONE TIME. THIS WILL ALLOW THE CONTRACT AREA SYSTEM TO IRRIGATE IN APPROXIMATELY 8 HOURS OR LESS ACCORDING TO WEATHER CONDITIONS. TOTAL GPM DEMAND OF SYSTEM WILL BE APPROXIMATELY 1–43 GPM MAXIMUM. DO NOT UNDER ANY CIRCUMSTANCE EXCEED 50 GPM OR OPERATE MORE THAN TWO (2) VALVES AT THE SAME TIME, ONE BUBBLER ZONE AND ONE EMITTER ZONE.
11. IRRIGATION CONTROL WIRE: RAINMASTER 2–WIRE CABLE, TW–CAB–14, WITH U.L. APPROVAL FOR DIRECT BURIAL IN GROUND, SIZE AWG–UF #14–1.
12. SPLICES: MADE WITH 3M–DBY, OR SPEARS MODEL #400, OR APPROVED EQUAL SEAL PACKS.
13. INSTALL ONE SPARE 2–WIRE CABLE FROM CONTROLLER ALONG THE ENTIRE MAIN LINE. INSTALL 36" EXCESS WIRE INTO A QUICK COUPLER BOX AT EACH VALVE GROUP. WEATHERPROOF UNUSED WIRE ENDS. SPLICING OF 2–WIRE CABLE AND 24 VOLT WIRES IS NOT PERMITTED EXCEPT IN VALVE BOXES. LEAVE A 36" LONG, 1" DIAMETER COIL OF EXCESS WIRE AT EACH SOLENOID WIRE SPLICE.
14. PLASTIC VALVE BOXES AND LIDS SHALL BE PURPLE IN COLOR WITH BOLT DOWN, NON–HINGED COVER MARKED "IRRIGATION". BOX BODY SHALL HAVE KNOCK OUTS. MANUFACTURER: RAIN BIRD, NDS, OLD CASTLE, OR APPROVED EQUAL.
15. INSTALL REMOTE CONTROL VALVE BOXES 12" FROM WALK, CURB, BUILDING OR LANDSCAPE FEATURE. AT MULTIPLE VALVE BOX GROUPS, EACH BOX SHALL BE AN EQUAL DISTANCE FROM THE WALK, CURB, ETC. AND EACH BOX SHALL BE 12" APART. SHORT SIDE OF RECTANGULAR VALVE BOXES SHALL BE PARALLEL TO WALK, CURB, ETC. REFER TO BOX INSTALLATION DETAIL.
16. FLUSH AND ADJUST IRRIGATION HEADS FOR EFFICIENT PERFORMANCE. PREVENT OVERSPRAY OR WATER ON THE WALKS, PLAYGROUNDS, ROADWAYS, SIGNS, LIGHTS, AND/OR BUILDINGS. SELECT THE BEST DEGREE OF ARC TO FIT THE EXISTING SITE CONDITIONS AND THROTTLE THE FLOW CONTROL OR PRESSURE REGULATION DEVICE AT EACH VALVE TO OBTAIN THE BEST OPERATING PRESSURE FOR EACH SYSTEM.
17. SET RETROFITTED POP–UP HEADS PERPENDICULAR TO FINISH GRADE OF THE AREA TO BE IRRIGATED UNLESS OTHERWISE NOTED ON THE DRAWINGS.
18. IRRIGATION HEAD LAYOUT AND PIPING AS SHOWN ON THE DRAWINGS IS INDICATIVE OF THE WORK TO BE INSTALLED. IRRIGATION HEADS AND PIPING AT CERTAIN LOCATIONS MAY REQUIRE FIELD ADJUSTMENT TO PREVENT HARM TO TREE ROOTS AND INTERFERENCE OF TREES TO IRRIGATION SYSTEM.
19. EXERCISE PARTICULAR ATTENTION AT ALL EXISTING AND NEW TREES TO ELIMINATE DIRECT SPRAY OF IRRIGATION HEADS ON TREE TRUNKS.
20. THE IRRIGATION SYSTEM DESIGN IS BASED ON THE MINIMUM OPERATING PRESSURE SHOWN ON THE IRRIGATION DRAWINGS. VERIFY WATER PRESSURE PRIOR TO CONSTRUCTION. REPORT ANY DIFFERENCE BETWEEN THE WATER PRESSURE INDICATED ON THE DRAWINGS AND THE ACTUAL PRESSURE READING AT THE IRRIGATION POINT OF CONNECTION TO LUHSD.
21. IRRIGATION DEMAND: 1–43 GPM MAX. AT 80 PSI RECYCLED WATER PRESSURE AT OAK STREET POINT OF CONNECTION.
22. PIPE SIZING SHOWN ON THE DRAWINGS IS TYPICAL. AS CHANGES IN LAYOUT OCCUR DURING STAKING AND CONSTRUCTION ADJUST THE SIZE ACCORDINGLY.
23. BEFORE COMMENCING WITH WORK UNDER THIS CONTRACT, NOTIFY UNDERGROUND SERVICE ALERT (USA) AT 811 OR 1–800–227–2600. DETERMINE THE EXACT LOCATION OF EXISTING UTILITIES, PIPES, AND STRUCTURES BEFORE COMMENCING WORK. COSTS OF DAMAGES WHICH OCCUR FROM FAILURE TO ACCURATELY LOCATE AND PRESERVE THESE UTILITIES SHALL BE THE RESPONSIBILITY OF THE IRRIGATION CONTRACTOR.
24. CAUTION: USE SHOVELS AND HAND DIG TRENCHES AROUND (E) TREE ROOT SYSTEMS. INSTALL PIPING AWAY FROM (E) TREE ROOT SYSTEMS. PROTECT (E) TREE ROOT SYSTEMS AT ALL TIMES. TYPICAL FOR ALL (E) TREE ROOT SYSTEMS. INSTALL ALL BURIED IRRIGATION SUCH AS PVC PIPING, VALVES, HEADS, BOXES, CONDUIT WITH WIRES, IN A MANNER TO AVOID EXCAVATING OR TRENCHING WITHIN THE EXISTING TREE DRIPLINES AND ROOTZONES.
25. NOTE: NO PLASTIC PIPE OR SOLVENT WELDED JOINTS ARE PERMITTED ABOVE GRADE.
26. (E) CONTROLLER, (E) MAIN CONTROL VALVE, AND (E) FLOW SENSOR NOTE: PROVIDE COORDINATION WITH CONTROLLER ASSEMBLY VENDOR FOR THE PROPER OPERATION OF THE (E) MAIN CONTROL VALVE, (E) FLOW SENSOR, AND ALL ASSOCIATED PARTS AND HARDWARE TO PROVIDE A COMPLETE AND FULLY OPERABLE SYSTEM.
27. COORDINATE WORK AFFECTING EXISTING, TEMPORARY AND PROPOSED IMPROVEMENTS TO PROVIDE CONTINUOUS IRRIGATION SYSTEM OPERATION.
28. SUBSURFACE EMITTER IRRIGATION:
   - CONTACT THE LOCAL SUBSURFACE MANUFACTURER'S REPRESENTATIVE (TORO) FOR THE INSTALLATION PROCEDURES AND FOR ASSISTANCE WITH THE INSTALLATION OF THE SUBSURFACE EMITTER LINE.
   - INSTALL EMITTER DRIPLINE ACCORDING TO THE MANUFACTURER'S INSTRUCTIONS AND GUIDELINES AND THE DETAILS SHOWN ON THE DRAWINGS.
   - PRIOR TO PLANTING, THOROUGHLY FLUSH ALL EMITTER TUBING TO REMOVE CONSTRUCTION DEBRIS AND SOIL FROM THE TUBING.
   - PRIOR TO PLANT INSTALLATION MAKE SURE THE SURROUNDING SHRUB PLANTING SOIL AND SOIL BASE FOR PLANTS IS THOROUGHLY MOISTENED.
   - TEMPORARY SURFACE WATERING IS REQUIRED AFTER INITIAL PLANTING OF THE PLANTS, SEED, OR SOD. ALLOW TWO WEEKS OR MORE AS NEEDED TO PROMOTE ROOT GROWTH AND SUSTAIN GOOD PLANT HEALTH.
   - CONTAINER ROOTBALL SOIL WILL HOLD WATER DIFFERENTLY FROM THE SITE'S NATIVE SOIL. DO NOT ALLOW SHRUB CONTAINER ROOTBALLS TO DRY OUT. KEEP CONTAINER ROOTBALLS MOIST AT ALL TIMES.
   - OBSERVE THE SOD WEEKLY TO MAKE SURE THAT THE SOD IS ROOTING IN THE PREPARED SURROUNDING SOIL BASE AND HAS ENOUGH MOISTURE.
29. PIPE THREAD SEALANT COMPOUND SHALL BE PERMATEX 51 OR RECTORSEAL T+2.
30. SOLVENT WELDED JOINTS: USE THE APPROVED SOLVENT WELD GLUE AND PRIMER AT ALL SOLVENT WELD SPIGOT JOINTS. GLUE THE JOINTS USING THE MANUFACTURER'S RECOMMENDED PROCEDURES FOR A SOLID AND COMPLETE GLUE JOINT. REFER TO THE WELD–ON CORPORATION INSTRUCTIONS, "BEST PRACTICES FOR SOLVENT WELDING THERMOPLASTIC PIPING: PVC, CPVC, and ABS": HTTPS://WELDON.COM/WP–CONTENT/UPLOADS/2015/03/BESTPRACTICES_THERMOPLASTIC_SEP08.PDF

CONSTRUCTION NOTES

1. AVOID (N) AND (E) UTILITIES INCLUDING FIRE LINES, POTABLE WATER LINES, SEWER LINES, ELECTRICAL CONDUITS, GAS LINES, AND TELEPHONE LINES. REFER TO CIVIL DRAWINGS FOR (N) AND (E) UTILITIES. POTHOLE TO LOCATE (N) AND (E) UTILITIES.
2. WHERE 2–WIRE CONTROL CABLE IS LOCATED BELOW VEHICULAR PAVEMENT: INSTALL 2–WIRE CABLE IN PVC ELECTRICAL CONDUIT, 24–INCH COVER, WITH TRAFFIC RATED CONCRETE PULL BOXES EVERY 200 FEET.
3. WHERE 2–WIRE CONTROL CABLE IS LOCATED BELOW PEDESTRIAN PAVEMENT: INSTALL 2–WIRE CABLE INSIDE A SPECIFIED SLEEVE, ADJACENT TO IRR MAIN LINE.
4. SLEEVES AND CONDUIT: INSTALL SLEEVES AND CONDUIT PER THE DETAILS AND AS SHOWN ON SHEET, L3.0.
5. (E) IRRIGATION INSIDE THE (N) WORK AREA SHALL BE DEMOLISHED AS REQUIRED TO MAKE WAY FOR THE (N) BUILDING OR HARDSCAPE CONSTRUCTION. THIS INCLUDES THE (E) RCV'S, LATERAL LINE PIPE, AND (E) QCV'S. WHEN IN DOUBT, CONFER WITH ARCHITECT FOR DIRECTION.
6. THE (E) IRRIGATION MAIN LINE SERVING LIBERTY HIGH SCHOOL CAMPUS LANDSCAPE SHALL REMAIN IN SERVICE AND IN GOOD WORKING ORDER AT ALL TIMES. PROVIDE THE FOLLOWING RESEARCH AND SERVICES PRIOR TO ACTUAL CONSTRUCTION OF THE (N) WORK:
   A. DISCUSS THE ACTUAL IRRIGATION MAIN LINE PIPE LOCATIONS WITH THE ARCHITECT. STAKE LOCATIONS AS REQUIRED.
   B. POT HOLE TO ESTABLISH WHAT BURIED PIPES ARE IRRIGATION MAIN LINES SERVING THE SCHOOL CAMPUS.
   C. CONSTRUCT (N) PVC MAIN LINE AS SHOWN ON THESE DRAWINGS.
6. (E) SCHOOL CAMPUS IRRIGATION OUTSIDE OF THE AREA OF WORK SHALL BE OUT OF SERVICE FOR A MAXIMUM OF 72 HOURS. NOTIFY THE DISTRICT BEFORE START OF WORK AFFECTING (E) LANDSCAPE.
7. PIPE, VALVES, SLEEVES, AND WIRE PLAN LOCATIONS ARE DIAGRAMMATIC, TYPICAL. ROUTE IRRIGATION TO AVOID CONFLICT WITH UTILITIES AND SITE CONSTRUCTION. REFER TO INSTALLATION NOTE 6, THIS SHEET.
8. MAIN LINE: AT 90 DEGREE BENDS, INSTALL MAIN LINE WITH TWO 45 DEGREE ELBOWS. MAINTAIN A GOOD LAMINAR FLOW IN MAIN LINE PIPE, DO NOT USE 90 DEGREE ELBOWS.

IRRIGATION LEGEND

SYMBOL	NUMBER	DESCRIPTION	PSI	GPM OR GPH	RADIUS (MIN./MAX.)	PRECIP. RATE
6" POP-UP SPRAYS AT TURF, RECYCLED WATER CAP						
	PROS–06–NSI–PRS30–CV–R/10H,Q	HUNTER 6" POP–UP BODY WITH CHECK VALVE, RECYCLED CAP, & HUNTER NOZZLE	30	0.9,0.4	8–10	2.0 IN/H
	PROS–06–NSI–PRS30–CV–R/8H,Q	HUNTER 6" POP–UP BODY WITH CHECK VALVE, RECYCLED CAP, & HUNTER NOZZLE	30	0.5,0.25	6–8	1.7 IN/H
TREE ROOT WATERING SYSTEM WITH SOCK AND PURPLE GRATE						
"	[RWS–B–C–1401]+[RWS–SOCK]+[RWS–GRATE–P]	RAIN BIRD (SEE "TREE BUBBLER QUANTITY CHART", THIS SHEET)	30	0.25	FLOOD	0.5 GPM
SHRUB BUBBLER OR TREE BUBBLER AT GRATE						
"	1401	RAIN BIRD BUBBLER	30	0.25	FLOOD	0.25 GPM

SUBSURFACE DRIPLINE AT SOD, 24" BUFFER FROM HARDSCAPE (PER MWELO REQUIREMENTS)

12" SPACING — AREA OF TURF SUBSURFACE IRRIGATION ZONE FOR MOW–FREE SOD ADJACENT TO PAVEMENT: INSTALL TORO SUB–SURFACE DRIPLINE AS FOLLOWS: 5/8" DL2000 PC DRIPLINE WITH ROOTGUARD, MODEL RGP–212–E, PURPLE COLOR, 0.5 GPH, 12 INCH SPACING, WITH TORO COMPRESSION FITTINGS. INSTALL TUBING AT A SPACING OF 10–12 INCHES BETWEEN ROWS, 3–4 INCHES FROM PAVEMENT OR LANDSCAPE EDGE, AND TRIANGULATE THE EMITTER PORTS BETWEEN ROWS. INSTALL ZONES WITH AIR VALVE AND FLUSH VALVE AS INDICATED IN THE DRIPLINE CONSTRUCTION DETAILS. PROVIDE A 2–INCH SOIL COVER MEASURED FROM FINISH GRADE.

EACH DRIPLINE TUBING ZONE SHALL INCLUDE THE FOLLOWING ITEMS:

- FCH–H — TORO HOSE END FLUSH DEVICE FOR FLUSHING THE PIPING AT END RUNS OF THE TORO DRIPLINE SYSTEMS. THIS ITEM PROVIDES A FLUSH OF THE SYSTEM TO EXHAUST DEBRIS WHICH MAY INFILTRATE THE EMITTER ZONE AND CLOG EMITTER OUTLETS. INSTALL IN OUT–OF–PLAY AREAS.
- YD–500–34 — TORO DRIPLINE AIR VENT/VACUUM RELIEF VALVE. INSTALL IN THE MIDDLE OF DRIPLINE ZONE. THIS ITEM EXHAUSTS AIR OR VACUUM WHICH COULD BE HARMFUL TO THE SYSTEM.

VALVES

- [100DWS.IB–R]+[TW–D–1] (1") [150DWS.IB–R]+[TW–D–1] (1.5") — GRISWOLD DWS SERIES SOLENOID CONTROL REMOTE CONTROL VALVE, NORMALLY CLOSED, BRASS CONSTRUCTION, FIPT, WITH INTEGRAL UNION, BALL VALVE, PURPLE CROSS HANDLE, AND RAINMASTER 2–WIRE DECODER (MINIMUM FLOW: 0.1 GPM).
- [DWS–100R.IS–R]+[PRL–30]+[TW–D–1] — GRISWOLD DWS SERIES DRIP ZONE SOLENOID CONTROL REMOTE CONTROL VALVE, NORMALLY CLOSED, BRASS CONSTRUCTION, FIPT, WITH INTEGRAL UNION, BALL VALVE, STRAINER, PURPLE CROSS HANDLE, SENNINGER LOW FLOW PRESSURE REGULATOR, AND RAINMASTER 2–WIRE DECODER. SIZE: 1". (EMITTER ZONES)
- QB44NPAT10 (1") — SUPERIOR QUICK COUPLING VALVE WITH 2–PIECE BODY, ACME THREADS, AND NON–POTABLE PURPLE LOCKING COVER. ACME KEY: QB33K07
- LMV–22BB (2.5") — LEEMCO RESILIENT WEDGE GATE VALVE WITH SLIP–ON CONNECTIONS AND 2" SQ. WRENCH NUT. IPS SERIES (BELL X BELL). SIZE TO BE EQUAL TO MAIN LINE PIPE SIZE. NOTE: GASKET BELL ENDS OF VALVE HAVE CAST ON SELF–RESTRAINED JOINT RESTRAINT SYSTEM.
- (EXISTING) — (E) REMOTE CONTROL VALVE, CONFIRM LOCATION IN THE FIELD, SEE PLAN NOTES
- (EXISTING) — (E) GATE VALVE, CONFIRM LOCATION IN THE FIELD, SEE PLAN NOTES
- (EXISTING) — (E) QUICK COUPLING VALVE, CONFIRM LOCATION IN THE FIELD, SEE PLAN NOTES

CONTROLLER

(A) SA6–RM2–TW/2[illegible]R/RSE/EMP–16/PED[illegible]/1RMD1/1RMD2/1R[illegible] -EXISTING AT FIELD- — CONTROLLER "A" ASSEMBLY CONSISTING OF A RAINMASTER "EAGLE PLUS" CENTRAL 2–WIRE CONTROLLER WITH 200 STATIONS AND THE FOLLOWING OPTIONS: -EXISTING AT FIELD-
- 2 ADDITIONAL YEARS OF ICENTRAL SERVICE
- RAINMASTER REMOTE ASSEMBLY (PMR)
- RAIN SENSOR (ENCLOSURE MOUNT)
- ENCLOSURE MOUNTING PAD
- ENCLOSURE PEDESTAL
- RAINMASTER 1 STATION DECODER (RAINMASTER TW–D–1)
- RAINMASTER LIGHTNING ARRESTOR (EVERY 600 FEET; RAINMASTER TW–LA–1)
- 2–WIRE CABLE: RAINMASTER TW–CAB–14, MAX. LENGTH = 5,000 FEET FROM CONTROLLER TO FARTHEST RCV

NOTE: THIS CONTROLLER IS EXISTING AT THE FIELD AND IS A 2–WIRE CABLE CONTROLLER WITH STATION DECODERS AND SHALL BE USED FOR ALL (N) REMOTE CONTROL VALVES. (9 STATIONS FOR THIS WORK, 82 STATIONS TOTAL USED, 118 STATIONS EXTRA AT CONTROLLER)

- CONTROLLER STATION NUMBER
- APPROXIMATE FLOW (GPM)
- REMOTE CONTROL VALVE SIZE

SLEEVES AND PIPE

- (E) IRR MAIN LINE. CONFIRM ACTUAL LOCATION AND SIZE IN THE FIELD. REPORT ANY DIFFERENCE FROM THE DESIGN PLAN SIZE TO THE ACTUAL SITE CONDITION SIZE TO THE DISTRICT.
- 2.5–INCH AND SMALLER MAIN LINE: 1120–SCHEDULE 40 PVC PURPLE PLASTIC PIPE FOR RECYCLED WATER USE WITH SOLVENT WELDED CONNECTIONS AND SCHEDULE 40 PVC PLASTIC SOLVENT WELDED FITTINGS. SOIL COVER: 18–INCH IN SOIL, 18–INCH UNDER PEDESTRIAN PAVEMENT, 24–INCH UNDER VEHICULAR PAVEMENT. SIZE AS NOTED. PROVIDE A 4" SAND BED UNDER PIPE AND T.CHRISTY BURIED DETECTABLE WARNING TAPE PER THE SPECIFICATIONS.
- LATERAL LINE: 1120–SCHEDULE 40 PVC PURPLE PLASTIC PIPE FOR RECYCLED WATER USE WITH SOLVENT WELDED CONNECTIONS AND SCHEDULE 40 PVC PLASTIC SOLVENT WELDED FITTINGS. 12–INCH SOIL COVER. SIZE 1–INCH UNLESS OTHERWISE NOTED.
- SLEEVE: 1120–CLASS 200 OR SCHEDULE 40 PVC PLASTIC PIPE, WHICHEVER HAS THE LARGEST WALL THICKNESS, WITH SCHEDULE 40 PVC PLASTIC SOLVENT WELDED FITTINGS. SOIL COVER TO BE EQUAL TO COVER REQUIRED FOR PIPE CONTAINED WITHIN SLEEVE 18–INCH MINIMUM COVER. 2–INCH DIA. UNLESS OTHERWISE NOTED.
- E — E — E — PB — (E) ELECTRICAL CONDUIT: USED FOR LOW VOLTAGE 2–WIRE CABLE ROUTING FROM (E) CONTROLLER "A". REFER TO DISTRICT FOR LOCATION AS NEEDED.
- (E) PULL BOX. FIELD VERIFY.
- SW — SW — (E) or (N) IRR 2–WIRE CABLE ROUTE FROM (E) CONTROLLER "A", SEE PLAN NOTES.

RECYCLED WATER SIGNAGE

- S — CITY OF BRENTWOOD RECYCLED WATER ADVISORY SIGN AVAILABLE FROM THE CITY. VERIFY FIELD CONSTRUCTION DETAILS AND FIELD LOCATIONS WITH THE CITY'S RECYCLED WATER REPRESENTATIVE.

TREE BUBBLER QUANTITY CHART

TREE SIZE	*TREE LOCATION*	*DEEP ROOT BUBBLER QTY.*	*TOTAL GPM*	*PRECIP RATE (GPM)*	*NOTES*
24" BOX	WITHIN SHRUB AREA	1	0.25	0.25	INSTALL DEEP ROOT BUBBLER ADJACENT TO ROOTBALL.
24" BOX	WITHIN LANDSCAPE MULCH	2	0.5	0.5	INSTALL DEEP ROOT BUBBLERS 180 DEG APART & ADJACENT TO ROOTBALL.
24" BOX	UNDER TREE GRATE	2	0.5	0.5	INSTALL ONE BUBBLER IN DRAIN TUBE FOR DEEP WATERING & ONE AT ROOTBALL SURFACE FOR TEMPORARY WATERING, 180 DEG APART.

JDE

JAMES D. EDDY ASSOCIATES
LANDSCAPE IRRIGATION ENGINEERS
P.O. BOX 2291
DANVILLE, CALIFORNIA 94526
P:(925) 867-3339
EMAIL: JDE@EDDYASSOCIATES.COM
PLANNING–DESIGN–MANAGEMENT
JDE PROJECT NO: 20010

IRRIGATION DESIGNER: James D. Eddy
JAMES D. EDDY ASSOCIATES, DANVILLE, CALIFORNIA
NOTE: NO LICENSE FOR THE LANDSCAPE IRRIGATION SYSTEM DESIGN PROFESSION IS AVAILABLE IN THE STATE OF CALIFORNIA.
MEMBER: AMERICAN SOCIETY OF IRRIGATION CONSULTANTS

ABBREVIATIONS:

AV	AIR VALVE
CI	CAST IRON
CU	COPPER
DEG	DEGREES
DI	DUCTILE IRON
DIA	DIAMETER
ECV	EMITTER CONTROL VALVE
EFF	EFFICIENCY
ETWU	ESTIMATED TOTAL WATER USE
ETO(ET)	EVAPOTRANSPIRATION
(E)	EXISTING
(F)	FUTURE
FC	FULL CIRCLE (360°)
FT	FEET
FIPT	FEMALE IRON PIPE THREAD
FPS	FEET PER SECOND
FS	FLOW SENSOR
FV	FLUSH VALVE
GA	GAUGE
GI	GALVANIZED IRON
GV	GATE VALVE
GPH	GALLONS PER HOUR
GPM	GALLONS PER MINUTE
ID	INTERNAL DIAMETER
IN	INCHES
IRR	IRRIGATION
LA	LANDSCAPE ARCHITECT
MAWA	MAXIMUM APPLIED WATER ALLOWANCE
MAX	MAXIMUM
MCV	MAIN CONTROL VALVE
MV	MAIN VALVE
MIN	MINIMUM
MIPT	MALE IRON PIPE THREAD
MPR	MATCHED PRECIPITATION RATE
MWELO	MODEL WATER EFFICIENT LANDSCAPE ORDINANCE
(N)	NEW
NIC	NOT IN CONTRACT
NPW	NON POTABLE WATER
NTS	NOT TO SCALE
OD	OUTSIDE DIAMETER
PC	PART CIRCLE (20°–360°)
PE	POLYETHYLENE
POC	POINT OF CONNECTION
PRECIP	PRECIPITATION
PRV	PRESSURE REDUCING VALVE
PVBA	PRESSURE VACUUM BREAKER ASSEMBLY
PSI	POUNDS PER SQUARE INCH
PVC	POLYVINYLCHLORIDE
PW	POTABLE WATER
QTY	QUANTITY
QCV	QUICK COUPLING VALVE
RCV	REMOTE CONTROL VALVE
RPBA	REDUCED PRESSURE BACKFLOW ASSEMBLY
RS	RIGID STEEL
RW	RECYCLED WATER
SCH	SCHEDULE
SF	SQUARE FOOT OR FEET
SQ	SQUARE
SS	STAINLESS STEEL
STD	STANDARD
TBD	TO BE DETERMINED
TBE	THREADED BOTH ENDS
TOE	THREADED ONE END
TYP	TYPICAL
UON	UNLESS OTHERWISE NOTED
UPC	UNIFORM PLUMBING CODE
USA	UNDERGROUND SERVICE ALERT
UV	ULTRAVIOLET
UVR	ULTRAVIOLET RESISTANT
VAC	VOLTS–ALTERNATING CURRENT
VB	VALVE BOX
WM	WATER METER

IDENTIFICATION STAMP
DIV. OF THE STATE ARCHITECT
APP: 01-119994 INC:
REVIEWED FOR
SS ☑ FLS ☑ ACS ☑
DATE: 08/16/2022

QUATTROCCHI KWOK ARCHITECTS
Main:
636 Fifth Street, Santa Rosa, CA 95404
East Bay:
55 Harrison Street, Suite 525,
Oakland, CA 94607
(707) 576-0829

GSM landscape architects, inc.
1700 Soscol Ave. Suite 23
Napa, CA 94559
707-255-4630
www.gsmlainc.com

REGISTERED LANDSCAPE ARCHITECT
GREN STRANGE
No. 2790
Exp. 10–31–22
STATE OF CALIFORNIA

LIBERTY HIGH SCHOOL

NEW CLASSROOM BUILDING

850 2ND STREET
BRENTWOOD, CA
94513

LIBERTY UNION HIGH SCHOOL DISTRICT

REVISIONS

DSA APP NO. 01-119994

ARCH PROJECT NO:	1925.00
DRAWN BY:	JDE/ST
DRAWING SCALE:	1"=20'
PTN: 61721-83	FILE NO: 7-H4

CONSTRUCTION DOCUMENTS

JUNE 24, 2022

SHEET TITLE

IRRIGATION LEGEND & NOTES

SHEET NUMBER

L3.1

JDE
JAMES D. EDDY ASSOCIATES
LANDSCAPE IRRIGATION ENGINEERS
P.O. BOX 2291
DANVILLE, CALIFORNIA 94526
P:(925) 867-3339
EMAIL: JDE@EDDYASSOCIATES.COM
PLANNING-DESIGN-MANAGEMENT
JDE PROJECT NO: 20010

IRRIGATION DESIGNER:
James D. Eddy
JAMES D. EDDY ASSOCIATES, DANVILLE, CALIFORNIA
NOTE: NO LICENSE FOR THE LANDSCAPE IRRIGATION SYSTEM DESIGN PROFESSION IS AVAILABLE IN THE STATE OF CALIFORNIA.
MEMBER: AMERICAN SOCIETY OF IRRIGATION CONSULTANTS

RECYCLED WATER ITEMS:
R1. VALVE BOX AND LID COLOR: RECYCLED WATER PURPLE
R2. RECYCLED WATER TAG – ATTACH TO VALVE WITH A PLASTIC ZIP TIE.

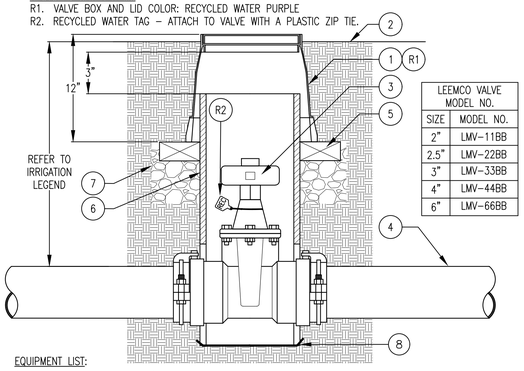

LEEMCO VALVE MODEL NO.	
SIZE	MODEL NO.
2"	LMV-11BB
2.5"	LMV-22BB
3"	LMV-33BB
4"	LMV-44BB
6"	LMV-66BB

EQUIPMENT LIST:
(REFER TO BUBBLED NUMBERS)
1. 10" ROUND PLASTIC VALVE BOX WITH PLASTIC BOLT-DOWN LID.
2. FINISH GRADE
3. LEEMCO GATE VALVE, BELL CONNECTIONS WITH INTEGRAL RESTRAINTS. UNLESS OTHERWISE NOTED, PLACE VALVE IN THE OPEN POSITION. BOLT TORQUE: 3" = 20 FT-LBS; 4", 6" & 8" = 50 FT-LBS.
4. MAIN LINE PIPE (ACCORDING TO LEGEND AND SPECIFICATIONS)
5. BRICK BASE (2 TOTAL, 180 DEGREES APART)
6. 10" SCH. 40 OR CLASS 200 PVC RISER-NOTCH RISER TO FIT OVER PIPE
7. CRUSHED GRAVEL, 6" DEEP, ALL AROUND
8. GALVANIZED WIRE CLOTH, 1/2" MESH, 19 GAUGE

INSTALLATION NOTES:
1. INSTALL VALVE BOX FLUSH WITH FINISH GRADE IN TURF AND 1" ABOVE FINISH GRADE IN SHRUB AREAS.
2. KEEP BRICKS AWAY FROM PIPE.

1 GATE VALVE, LEEMCO WITH BELL CONNECTIONS & RESTRAINTS (2.5")
NOT TO SCALE

DO NOT COPY WITHOUT WRITTEN PERMISSION OF JDE © 1991

RECYCLED WATER ITEMS:
R1. VALVE BOX AND LID COLOR: RECYCLED WATER PURPLE
R2. RECYCLED WATER TAG – ATTACH TO VALVE WITH A PLASTIC ZIP TIE.

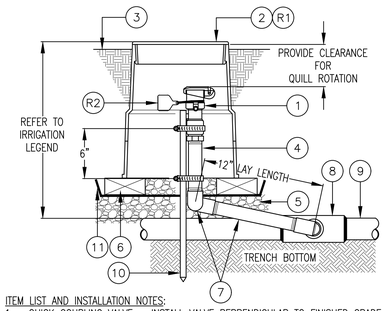

ITEM LIST AND INSTALLATION NOTES:
1. QUICK COUPLING VALVE – INSTALL VALVE PERPENDICULAR TO FINISHED GRADE UNLESS FIELD CONDITIONS REQUIRE ADJUSTMENT. INSTALL IN OUT-OF-PLAY OR PEDESTRIAN ACCESS AREAS. UNLESS OTHERWISE NOTED, FITTINGS ARE THE SAME IPT SIZE AS THE VALVE IPT INLET THREAD SIZE.
2. PLASTIC VALVE BOX AND LID, 10" ROUND, BOLT-DOWN LID – INSTALL VALVE BOX FLUSH WITH FINISH GRADE IN TURF AND 1" ABOVE FINISH GRADE IN SHRUB AREAS
3. FINISH GRADE OR TOP OF MULCH
4. PVC SCH 80 NIPPLE (LENGTH AS REQUIRED)
5. CRUSHED GRAVEL BASE, 6" DEEP
6. COMMON BRICK, 2 TOTAL, 180 DEGREES APART
7. SWING JOINT ASSEMBLY:
   A. FINGER TIGHTEN O-RING JOINTS AND BACK-OFF ONE FULL TURN TO ALLOW FOR SWING ACTION.
   B. PROVIDE 12" BETWEEN CENTER LINES OF ELBOWS ON SWING ARM.
   C. INSTALL THE SWING JOINT LAY ARM AT AN ANGLE BETWEEN 30° AND 45° OF THE LATERAL IN ORDER TO ABSORB DOWNWARD IMPACT.
   D. SWING JOINT MANUFACTURER: RAIN BIRD SWJ SERIES, 1" DURA STANDARD UNI-BODY MODEL 1-A2-2-1-12, OR APPROVED EQUAL.
8. TEE, ELBOW OR SADDLE CONNECTION (PER MAIN LINE FITTING SPECIFICATIONS)
9. MAIN LINE PIPE, (MATERIAL AND TYPE PER LEGEND AND SPECIFICATIONS)
10. #4 X 24" REBAR STAKE W/STAINLESS STEEL GEAR CLAMPS OR EQUIVALENT SUPPORT SYSTEM
11. METAL WIRE MESH TO PREVENT GOPHER INTRUSION, 1/2" MESH, 19 GA, GALVANIZED

2 QUICK COUPLING VALVE IN LANDSCAPED AREAS
NOT TO SCALE

DO NOT COPY WITHOUT WRITTEN PERMISSION OF JDE © 1991

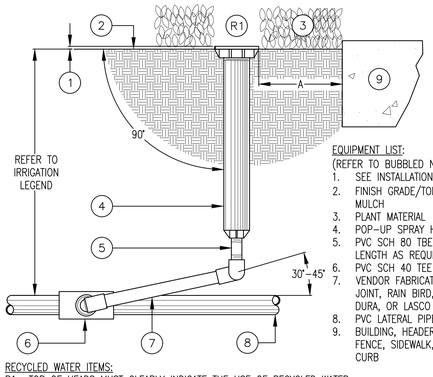

EQUIPMENT LIST:
(REFER TO BUBBLED NUMBERS)
1. SEE INSTALLATION NOTE 1
2. FINISH GRADE/TOP OF MULCH
3. PLANT MATERIAL
4. POP-UP SPRAY HEAD
5. PVC SCH 80 TBE NIPPLE, LENGTH AS REQUIRED
6. PVC SCH 40 TEE OR ELL
7. VENDOR FABRICATED SWING JOINT, RAIN BIRD, TORO, DURA, OR LASCO
8. PVC LATERAL PIPE
9. BUILDING, HEADERBOARD, FENCE, SIDEWALK, OR CURB

RECYCLED WATER ITEMS:
R1. TOP OF HEADS MUST CLEARLY INDICATE THE USE OF RECYCLED WATER.

INSTALLATION NOTES:
1. INSTALL TOP OF HEAD 1" ABOVE FINISH GRADE IN SHRUB AREAS AND FLUSH WITH GRADE IN TURF AREAS. SIDE INLET USE IS NOT PERMITTED.
2. DIMENSION "A": INSTALL HEAD 4" FROM HEADERBOARD OR PAVEMENT.
3. INSTALL HEAD PERPENDICULAR TO FINISHED GRADE.
4. PRIOR TO NOZZLE INSTALLATION, FLUSH HEAD WITH WATER USING MANUFACTURER'S FLUSH NOZZLE TO ELIMINATE DEBRIS FROM WITHIN HEAD AND RISER.
5. INSTALL NOZZLE SCREEN. INSTALL NOZZLE, HAND TIGHT. RATCHET POP-UP RISER AND ADJUST VARIABLE ARC NOZZLES SO NOZZLE SPRAY IS WITHIN PLANTED AREA. NO OVERSPRAY ON WINDOWS, BUILDINGS, STREETS OR PAVEMENT.

3 6" POP-UP TURF SPRAY
NOT TO SCALE

DO NOT COPY WITHOUT WRITTEN PERMISSION OF JDE © 1991

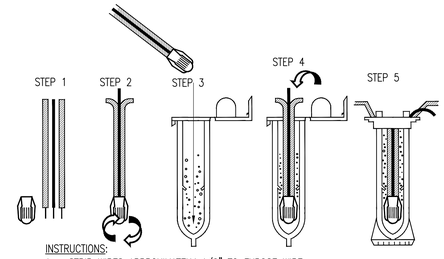

INSTRUCTIONS:
1. STRIP WIRES APPROXIMATELY 1/2" TO EXPOSE WIRE.
2. TWIST CONNECTOR AROUND WIRES CLOCKWISE UNTIL HAND TIGHT, DO NOT OVERTIGHTEN.
3. INSERT WIRE ASSEMBLY INTO PLASTIC TUBE UNTIL WIRE CONNECTOR SNAPS PAST LIP IN BOTTOM OF TUBE.
4. PLACE WIRES WHICH EXIT TUBE IN WIRE EXIT HOLES AND CLOSE CAP UNTIL IT SNAPS.
5. INSPECT FINAL SPLICE ASSEMBLY TO BE SECURE AND FINISHED.

4 WIRE SPLICE
NOT TO SCALE

DO NOT COPY WITHOUT WRITTEN PERMISSION OF JDE © 1991

RECYCLED WATER ITEMS:
R1. VALVE BOX AND LID COLOR: RECYCLED WATER PURPLE
R2. RECYCLED WATER TAG – ATTACH TO VALVE WITH A PLASTIC ZIP TIE.

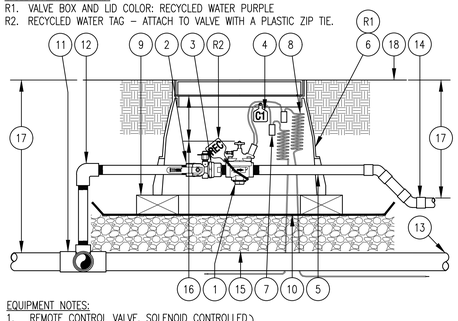

EQUIPMENT NOTES:
1. REMOTE CONTROL VALVE, SOLENOID CONTROLLED
2. BRASS BALL VALVE, INTEGRAL WITH VALVE
3. BRASS UNION, INTEGRAL WITH VALVE
4. RCV ID TAG
5. NIPPLE, PVC SCH 80, TOE, LENGTH AS REQUIRED
6. RECTANGULAR PLASTIC VALVE BOX WITH WITH BOLT DOWN LID. 12"x17"x12" DEEP. OLD CASTLE (CARSON) 1419 OR APPROVED EQUAL. REFER TO BOX INSTALLATION DETAIL.
7. WATER PROOF CONNECTION (1 OF 2)
8. CONTROL WIRE, 30-INCH LINEAR LENGTH OF COILED WIRE, TYP.
9. COMMON BRICK, 1 AT EACH CORNER OF BOX, FOUR TOTAL
10. GALVANIZED WIRE CLOTH, 1/2" MESH, 19 GAUGE
11. MAIN LINE TEE OR ELL, PVC SCH PER LEGEND, S X S X T
12. NIPPLE, PVC SCH 80, TBE, LENGTH AS REQUIRED AND ELL, PVC SCH 80, T X T
13. PVC MAIN LINE
14. PVC LATERAL LINE. LOWER LATERAL LINE DOWN WITH SOLVENT WELDED SCHEDULE 40 PVC 45 ELBOWS.
15. 3/4" AND 1/2" CLEAN CRUSHED GRAVEL BASE
16. 3"±1" MIN. CLEARANCE
17. REFER TO IRRIGATION LEGEND
18. FINISH GRADE

MANUFACTURER'S PIPING ASSEMBLY

5 REMOTE CONTROL VALVE WITH GRISWOLD ".IB" ASSEMBLY
NOT TO SCALE

DO NOT COPY WITHOUT WRITTEN PERMISSION OF JDE © 1991

RECYCLED WATER ITEMS:
R1. VALVE BOX AND LID COLOR: RECYCLED WATER PURPLE
R2. RECYCLED WATER TAG – ATTACH TO VALVE WITH A PLASTIC ZIP TIE.

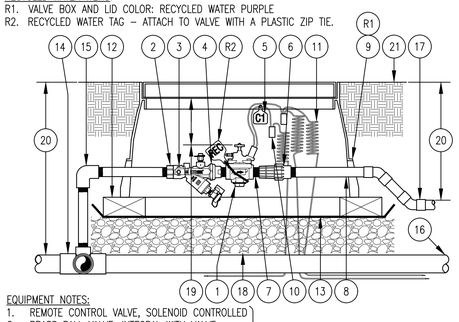

EQUIPMENT NOTES:
1. REMOTE CONTROL VALVE, SOLENOID CONTROLLED
2. BRASS BALL VALVE, INTEGRAL WITH VALVE
3. BRASS WYE STRAINER, INTEGRAL WITH VALVE
4. BRASS UNION, INTEGRAL WITH VALVE
5. RCV ID TAG
6. PRESSURE REDUCING VALVE TO PROVIDE 30 PSI AT ALL EMITTERS.
7. SHORT NIPPLE, PVC SCH 80, TBE,
8. NIPPLE, PVC SCH 80, TOE, LENGTH AS REQUIRED
9. RECTANGULAR PLASTIC VALVE BOX WITH WITH BOLT DOWN LID. 15-3/4"x25-1/4"x12" DEEP. OLD CASTLE (CARSON) 1324 OR APPROVED EQUAL. REFER TO BOX INSTALLATION DETAIL.
10. WATER PROOF CONNECTION (1 OF 2)
11. CONTROL WIRE, 30-INCH LINEAR LENGTH OF COILED WIRE, TYP.
12. COMMON BRICK, 1 AT EACH CORNER OF BOX, FOUR TOTAL
13. GALVANIZED WIRE CLOTH, 1/2" MESH, 19 GAUGE
14. MAIN LINE TEE OR ELL, PVC SCH PER LEGEND, S X S X T
15. NIPPLE, PVC SCH 80, TBE, LENGTH AS REQUIRED AND ELL, PVC SCH 80, T X T
16. PVC MAIN LINE
17. PVC LATERAL LINE. LOWER LATERAL LINE DOWN WITH SOLVENT WELDED SCHEDULE 40 PVC 45 ELBOWS.
18. 3/4" AND 1/2" CLEAN CRUSHED GRAVEL BASE
19. 3"±1" MIN. CLEARANCE
20. REFER TO IRRIGATION LEGEND
21. FINISH GRADE

MANUFACTURER'S PIPING ASSEMBLY

6 EMITTER CONTROL VALVE WITH GRISWOLD ".IS" ASSEMBLY
NOT TO SCALE

DO NOT COPY WITHOUT WRITTEN PERMISSION OF JDE © 1991

RECYCLED WATER ITEMS:
1. VALVE BOX AND LID COLOR: RECYCLED WATER PURPLE

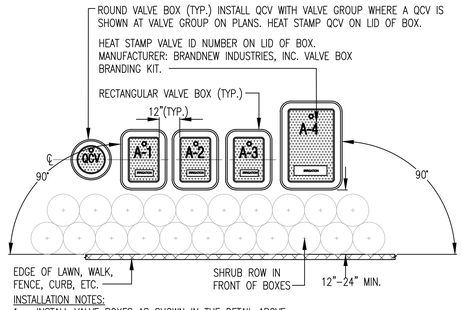

INSTALLATION NOTES:
1. INSTALL VALVE BOXES AS SHOWN IN THE DETAIL ABOVE.
2. INSTALL VALVE BOX ASSEMBLIES IN SHRUB OR GROUND COVER ZONES. VALVE ASSEMBLIES INSTALLED IN A TURF ZONE IS PERMITTED ONLY IF A SHRUB OR GROUND COVER AREA DOES NOT EXIST IN THE PROXIMITY OF THE IRRIGATION ZONE.
3. PLACE THE CENTER OF THE VALVE BOX OVER THE CENTER OF THE REMOTE CONTROL VALVE. INSTALL VALVE BOX IN A WAY TO ENABLE EASY SERVICING OR REMOVAL OF VALVE.
4. INSTALL TOP OF BOX 1" ABOVE FINISHED GRADE IN SHRUB OR GROUND COVER AREAS OR EQUAL TO THE DEPTH OF THE MULCH AND FLUSH WITH GRADE IN TURF ZONES. INSTALL THE TOP OF BOX AT THE SAME ANGLE AS THE FINISHED GRADE.
5. PREVENT THE COLLAPSE AND DEFORMATION OF VALVE BOX SIDES. DO NOT HEAVILY COMPACT SOIL AGAINST THE SIDES OF THE VALVE BOX.
6. INSTALL EXTENSION RISERS TO VALVE BOX AS REQUIRED TO COMPLETELY ENCLOSE VALVE ASSEMBLY. PROVIDE EXTENSION RISER MANUFACTURED BY THE SAME MANUFACTURER OF THE VALVE BOX.
7. PREVENT SOIL INTRUSION INTO THE BOX. USE 20 MIL POLYETHYLENE TAPE AROUND PIPE CUTOUTS AS NEEDED.
8. SAWCUTTING OR MODIFYING THE VALVE BOXES BEYOND WHAT THE MANUFACTURER ALLOWS IS NOT PERMITTED.
11. WHEN ASSEMBLY IS COMPLETE INSTALL THE GRAVEL BELOW THE VALVE. FINISHED GRAVEL SHALL BE CLEAN WITHOUT DEBRIS IN THE VALVE BOX.
12. WHEN WORK IS COMPLETE AND ACCEPTED BY THE DISTRICT OR TO PREVENT VANDALISM, BOLT DOWN THE LIDS.

7 BOX INSTALLATION
NOT TO SCALE

DO NOT COPY WITHOUT WRITTEN PERMISSION OF JDE © 1991

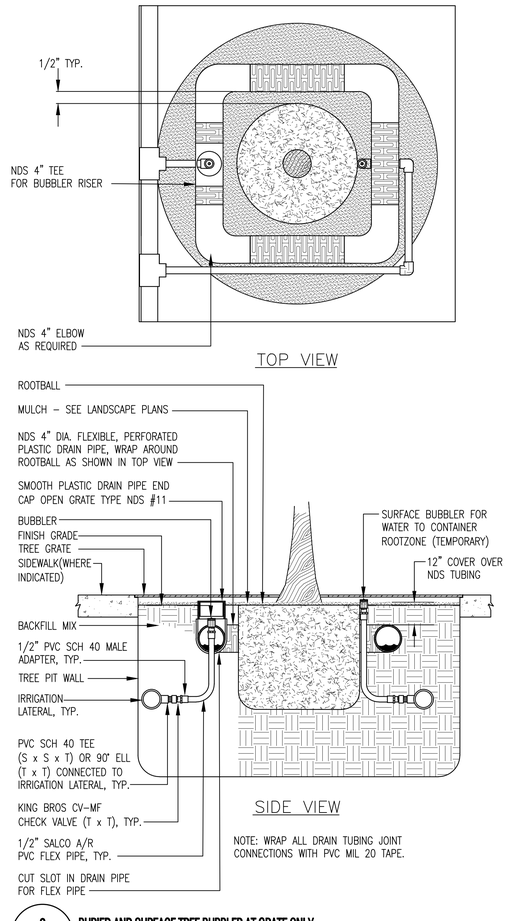

8 BURIED AND SURFACE TREE BUBBLER AT GRATE ONLY
NOT TO SCALE

DO NOT COPY WITHOUT WRITTEN PERMISSION OF JDE © 1991

IDENTIFICATION STAMP
DIV. OF THE STATE ARCHITECT
APP: 01-119994 INC:
REVIEWED FOR
SS ☑ FLS ☑ ACS ☑
DATE: 08/16/2022

QUATTROCCHI KWOK ARCHITECTS
Main:
636 Fifth Street, Santa Rosa, CA 95404
East Bay:
55 Harrison Street, Suite 525,
Oakland, CA 94607
(707) 576-0829

GSM landscape architects, inc.
1700 Soscol Ave. Suite 23
Napa, CA 94559
707-255-4630
www.gsmlainc.com

LICENSED LANDSCAPE ARCHITECT
GREEN STRANGE
No. 2790
Exp. 10-31-22
STATE OF CALIFORNIA

LIBERTY HIGH SCHOOL

NEW CLASSROOM BUILDING

850 2ND STREET
BRENTWOOD, CA
94513

LIBERTY UNION HIGH SCHOOL DISTRICT

REVISIONS

DSA APP NO. 01-119994

ARCH PROJECT NO:	1925.00
DRAWN BY:	JDE/ST
DRAWING SCALE:	1"=20'
PTN: 61721-83	FILE NO: 7-H4

CONSTRUCTION DOCUMENTS
JUNE 24, 2022

SHEET TITLE
IRRIGATION DETAILS

SHEET NUMBER
L3.2

JDE
JAMES D. EDDY ASSOCIATES
LANDSCAPE IRRIGATION ENGINEERS
P.O. BOX 2291
DANVILLE, CALIFORNIA 94526
P:(925) 867-3339
EMAIL: JDE@EDDYASSOCIATES.COM
PLANNING-DESIGN-MANAGEMENT
JDE PROJECT NO: 20010

IRRIGATION DESIGNER:
James D. Eddy
JAMES D. EDDY ASSOCIATES, DANVILLE, CALIFORNIA
NOTE: NO LICENSE FOR THE LANDSCAPE IRRIGATION SYSTEM DESIGN PROFESSION IS AVAILABLE IN THE STATE OF CALIFORNIA.
MEMBER: AMERICAN SOCIETY OF IRRIGATION CONSULTANTS

THESE DETAILS ARE SPECIFIC TO BURIED TORO DRIPLINE TUBING

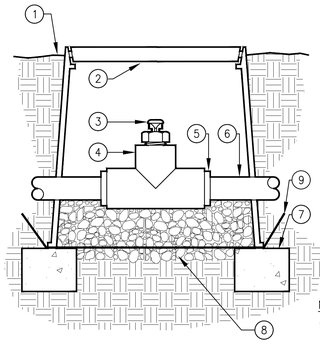

SECTION/ELEVATION

1. FINISHED GRADE
2. 6" ROUND VALVE BOX, PURPLE FOR RECYCLED WATER USE
3. TORO DL2000 AIR/VACUUM RELIEF VALVE (YD-500-34)
4. 1/2" PVC TEE (SxSxT)
5. TORO DL2000 COMPRESSION ADAPTER (CA710) (TYP.)
6. TORO DL2000 DRIPLINE OR BLANK TUBING
7. HALF BRICK SUPPORTS
8. DRAIN ROCK SUMP (6" DEEP)
9. METAL WIRE MESH, 1/2" MESH, 19 GA, GALVANIZED

NOTES:
1. AIR/VACUUM RELIEF VALVE CANNOT BE CONNECTED LOWER THAN DRIPLINE LATERALS.
2. USE ONE FOR EACH INCREMENT OF 7 GPM.

1 1/2" AIR/VACUUM RELIEF VALVE (TORO DL2000)
NOT TO SCALE

DO NOT COPY WITHOUT WRITTEN PERMISSION OF JDE © 1997

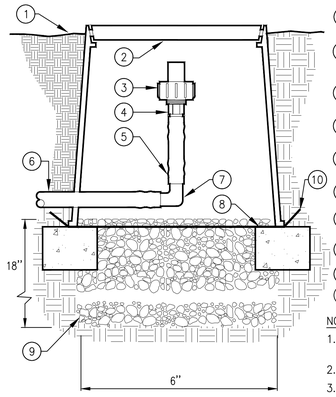

SECTION/ELEVATION

1. FINISHED GRADE
2. 6" ROUND VALVE BOX, PURPLE FOR RECYCLED WATER USE
3. TORO DL2000 AUTOMATIC FLUSH VALVE (FCH-H)
4. TORO DL2000 3/4" MALE ADAPTER (DL-75MA-9153)
5. TORO DL2000 BLANK TUBING (A710)
6. TORO DL2000 DRIPLINE
7. TORO DL2000 BARBED ELBOW (DL-E-9018)
8. HALF BRICK SUPPORTS
9. DRAIN ROCK SUMP (18" DEEP)
10. METAL WIRE MESH, 1/2" MESH, 19 GA, GALVANIZED

NOTES:
1. USE ONE FOR EACH INCREMENT OF 7 GPM.
2. FLUSH RATE = 0.8 GPM
3. SEALING PRESSURE = 2 PSI

2 AUTOMATIC FLUSH VALVE (TORO DL2000)
NOT TO SCALE

DO NOT COPY WITHOUT WRITTEN PERMISSION OF JDE © 1997

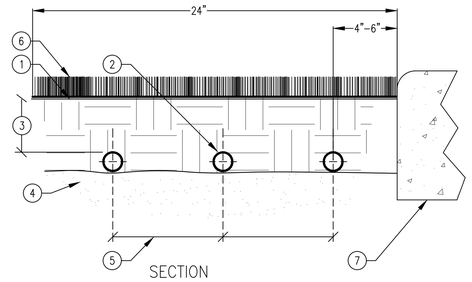

SECTION

1. FINISHED GRADE
2. TORO DL2000 DRIPLINE (TYP.)
3. DEPTH OF TORO DL2000 DRIPLINE = 2"
4. SUB-GRADE NATIVE SOIL. REMOVE ALL ROCKS OR JAGGED MATERIAL TO PROTECT TUBING.
5. TORO DL2000 DRIPLINE LATERAL SPACING, SEE LEGEND FOR DISTANCE.
6. TURF - SEE LANDSCAPE DRAWINGS
7. PAVEMENT - SEE LANDSCAPE DRAWINGS

3 SUBSURFACE TURF IRRIGATION AT BIOSWALE - TORO DL2000
NOT TO SCALE

DO NOT COPY WITHOUT WRITTEN PERMISSION OF JDE © 1997

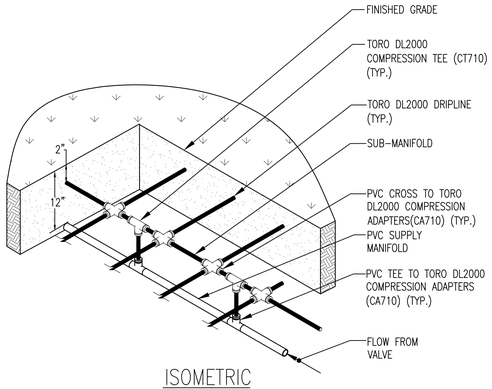

ISOMETRIC

NOTES:
1. REFER TO DRAWINGS, IRRIGATION LEGEND AND SPECIFICATIONS FOR ADDITIONAL INFORMATION.
2. PLANT TREES BETWEEN DRIPLINE TUBES.
3. INSTALL DRIPLINE 2" BELOW FINISHED GRADE AND STAKE DRIPLINE EVERY 4' OR AS NECESSARY TO SECURE THE TUBING FROM MOVEMENT.
4. USE ONLY TORO COMPRESSION FITTINGS WITH TORO DRIPLINE TUBING.
5. INSTALL FITTINGS TO TUBING AS DIRECTED BY MANUFACTURER.

4 CENTER FEED MANIFOLD
NOT TO SCALE

DO NOT COPY WITHOUT WRITTEN PERMISSION OF JDE © 1997

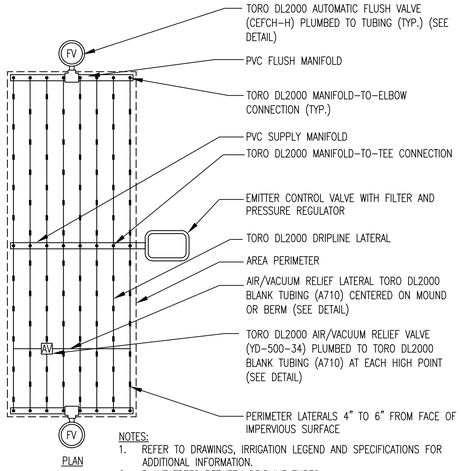

PLAN

NOTES:
1. REFER TO DRAWINGS, IRRIGATION LEGEND AND SPECIFICATIONS FOR ADDITIONAL INFORMATION.
2. PLANT TREES BETWEEN DRIPLINE TUBES.
3. INSTALL DRIPLINE 3"-4" BELOW FINISHED GRADE AND STAKE DRIPLINE EVERY 4' OR AS NECESSARY TO SECURE THE TUBING FROM MOVEMENT.
4. USE ONLY TORO COMPRESSION FITTINGS WITH TORO DRIPLINE TUBING.
5. INSTALL FITTINGS TO TUBING AS DIRECTED BY MANUFACTURER.

5 CENTER FEED LAYOUT
NOT TO SCALE

DO NOT COPY WITHOUT WRITTEN PERMISSION OF JDE © 1997

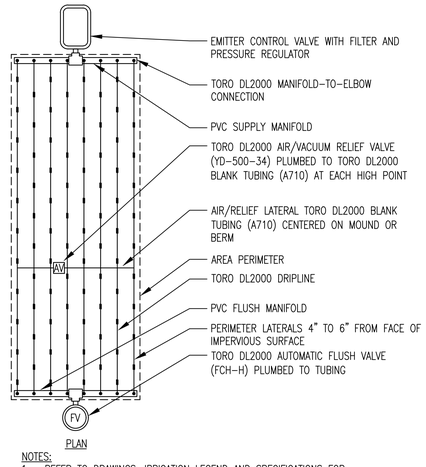

PLAN

NOTES:
1. REFER TO DRAWINGS, IRRIGATION LEGEND AND SPECIFICATIONS FOR ADDITIONAL INFORMATION.
2. PLANT TREES BETWEEN DRIPLINE TUBES.
3. INSTALL DRIPLINE 3"-4" BELOW FINISHED GRADE AND STAKE DRIPLINE EVERY 4' OR AS NECESSARY TO SECURE THE TUBING FROM MOVEMENT.
4. USE ONLY TORO COMPRESSION FITTINGS WITH TORO DRIPLINE TUBING.
5. INSTALL FITTINGS TO TUBING AS DIRECTED BY MANUFACTURER.

6 END FEED LAYOUT
NOT TO SCALE

DO NOT COPY WITHOUT WRITTEN PERMISSION OF JDE © 1997

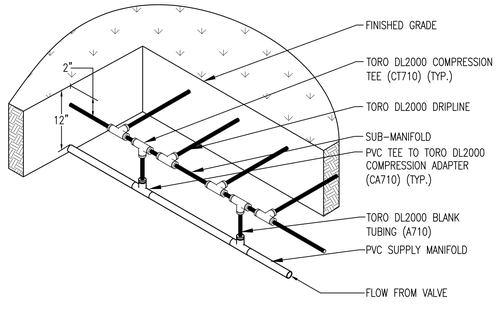

ISOMETRIC

NOTES:
1. REFER TO DRAWINGS, IRRIGATION LEGEND AND SPECIFICATIONS FOR ADDITIONAL INFORMATION.
2. PLANT TREES BETWEEN DRIPLINE TUBES.
3. INSTALL DRIPLINE 2" BELOW FINISHED GRADE AND STAKE DRIPLINE EVERY 4' OR AS NECESSARY TO SECURE THE TUBING FROM MOVEMENT.
4. USE ONLY TORO COMPRESSION FITTINGS WITH TORO DRIPLINE TUBING.
5. INSTALL FITTINGS TO TUBING AS DIRECTED BY MANUFACTURER.

7 END FEED MANIFOLD
NOT TO SCALE

DO NOT COPY WITHOUT WRITTEN PERMISSION OF JDE © 1997

IDENTIFICATION STAMP
DIV. OF THE STATE ARCHITECT
APP: 01-119994 INC:
REVIEWED FOR
SS ☑ FLS ☑ ACS ☑
DATE: 08/16/2022

QUATTROCCHI KWOK ARCHITECTS
Main:
636 Fifth Street, Santa Rosa, CA 95404
East Bay:
55 Harrison Street, Suite 525,
Oakland, CA 94607
(707) 576-0829

GSM landscape architects, inc.
1700 Soscol Ave. Suite 23
Napa, CA 94559
707-255-4630
www.gsmlainc.com

REGISTERED LANDSCAPE ARCHITECT
GREGORY STRANGE
No. 2790
Exp. 10-31-22
STATE OF CALIFORNIA

LIBERTY HIGH SCHOOL

NEW CLASSROOM BUILDING

850 2ND STREET
BRENTWOOD, CA
94513

LIBERTY UNION HIGH SCHOOL DISTRICT

REVISIONS

DSA APP NO. 01-119994

ARCH PROJECT NO:	1925.00
DRAWN BY:	JDE/ST
DRAWING SCALE:	1"=20'
PTN: 61721-83	FILE NO: 7-H4

CONSTRUCTION DOCUMENTS

JUNE 24, 2022

SHEET TITLE

IRRIGATION DETAILS

SHEET NUMBER

L3.3

RAIN MASTER® CONTROL SYSTEMS

RAIN MASTER™ TWICE 2-WIRE • LOOP CONFIGURATION

Decoder Options
TW-D-1 Kit Twice Single Valve Decoder
TW-D-2 Kit Twice Dual Valve Decoder
TW-D-3 Kit Twice Quad Valve Decoder

Loop Configuration		
Wire Gauge	Total Loop Length (feet)	Distance to furthest valve (ft)
TW-CAB-14	10,000	5,000
Maximum 600 feet between Lightning Arrestors		

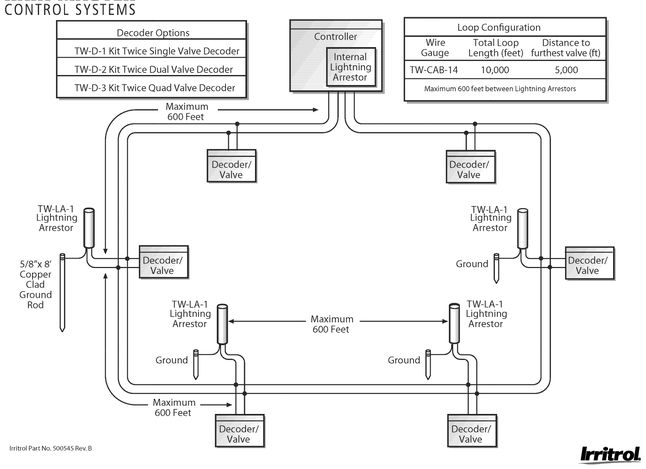

Irritrol Part No. 500545 Rev. B

Irritrol

RAIN MASTER® CONTROL SYSTEMS

RAIN MASTER™ TWICE™ • STRAIGHT LINE CONFIGURATION

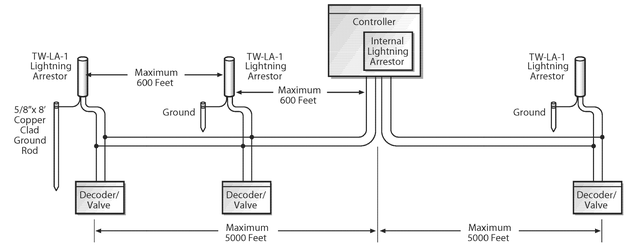

Straight Line Configuration	
Wire Gauge	Total Wire Length (feet)
TW-CAB-14	5,000
Maximum 600 feet between Lightning Arrestors	

Decoder Options
TW-D-1 Kit Twice Single Valve Decoder
TW-D-2 Kit Twice Dual Valve Decoder
TW-D-3 Kit Twice Quad Valve Decoder

Irritrol Part No. 500544 Rev. B

Irritrol

JDE

JAMES D. EDDY ASSOCIATES
LANDSCAPE IRRIGATION ENGINEERS
P.O. BOX 2291
DANVILLE, CALIFORNIA 94526
P:(925) 867-3339
EMAIL: JDE@EDDYASSOCIATES.COM
PLANNING-DESIGN-MANAGEMENT
JDE PROJECT NO: 20010

IRRIGATION DESIGNER:
James D. Eddy
JAMES D. EDDY ASSOCIATES, DANVILLE, CALIFORNIA
NOTE: NO LICENSE FOR THE LANDSCAPE IRRIGATION SYSTEM DESIGN PROFESSION IS AVAILABLE IN THE STATE OF CALIFORNIA.
MEMBER: AMERICAN SOCIETY OF IRRIGATION CONSULTANTS

RAIN MASTER® CONTROL SYSTEMS

RAIN MASTER™ TWICE 2-WIRE • WIRE CONNECTION DETAIL

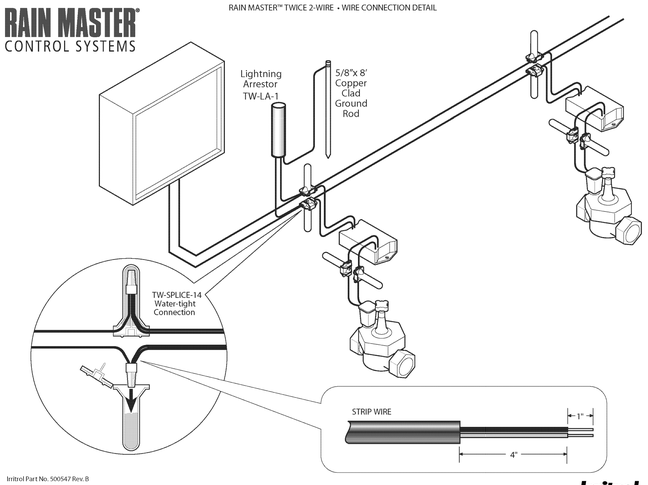

Irritrol Part No. 500547 Rev. B

Irritrol

RAIN MASTER® CONTROL SYSTEMS

RAIN MASTER™ TWICE• GRID CONFIGURATION

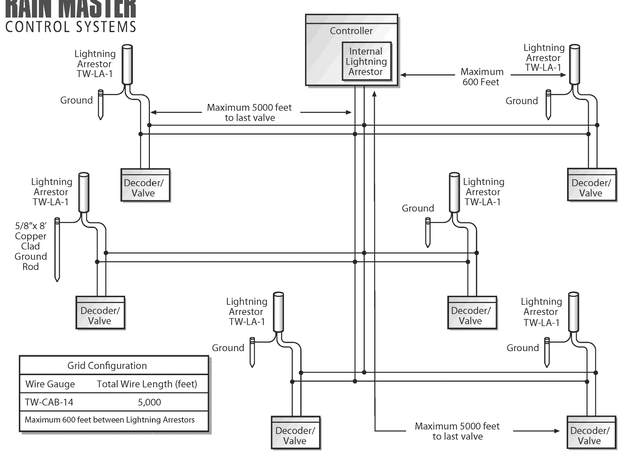

Grid Configuration	
Wire Gauge	Total Wire Length (feet)
TW-CAB-14	5,000
Maximum 600 feet between Lightning Arrestors	

Irritrol Part No. 500546 Rev. B

Irritrol

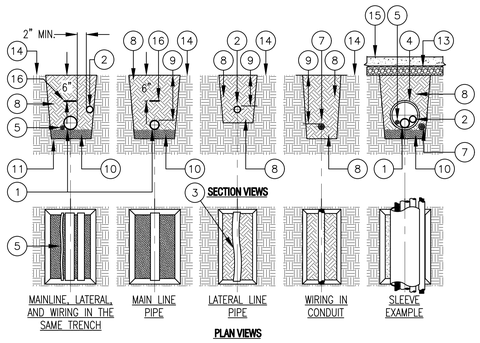

ITEM LIST AND INSTALLATION NOTES:

1. MAIN LINE PIPE; PROVIDE A MINIMUM OF 2" BETWEEN ALL PIPES.
2. LATERAL LINE PIPE; PROVIDE A MINIMUM OF 2" BETWEEN ALL PIPES.
3. SNAKE SOLVENT WELD PLASTIC PIPING IN TRENCH AS SHOWN.
4. SLEEVE BELOW ALL HARDSCAPE ELEMENTS WITH SLEEVING TWICE THE DIAMETER OF THE PIPE OR WIRE BUNDLE WITHIN.
5. WIRE BUNDLE: INSTALL WIRING BENEATH AND BESIDE MAIN LINE. TAPE AND BUNDLE AT 10-FOOT INTERVALS.
6. TIE A 24-INCH LOOP IN WIRING AT CHANGES OF DIRECTION OF 30° OR GREATER. UNTIE AFTER ALL CONNECTIONS HAVE BEEN MADE.
7. LOW VOLTAGE WIRE CONDUIT (WHERE SPECIFIED).
8. CLEAN BACKFILL PER THE SPECIFICATIONS, TYPICAL.
9. FOR PIPE, SLEEVE AND WIRE BURIAL DEPTHS, REFER TO IRRIGATION LEGEND AND SPECIFICATIONS.
10. PROVIDE A 4"±1" SAND BED FOR PIPE.
11. TRENCH BOTTOM OF UNDISTURBED SOIL, TYPICAL.
12. WHERE BORING UNDER EXISTING PAVEMENT IS REQUIRED – REFER TO DRAWINGS FOR SPECIFIC INFORMATION.
13. PAVEMENT AND SUBGRADE
14. FINISH GRADE
15. PAVED OR CONCRETE SURFACE
16. DETECTABLE WARNING TAPE PER SPECIFICATIONS

4 TRENCH
NOT TO SCALE

DO NOT COPY WITHOUT WRITTEN PERMISSION OF JDE © 1999

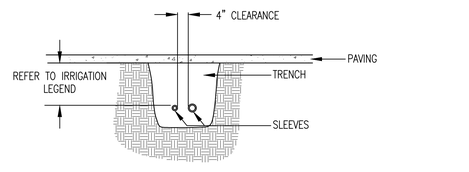

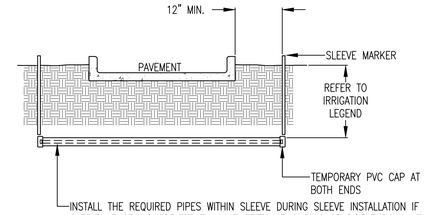

INSTALL THE REQUIRED PIPES WITHIN SLEEVE DURING SLEEVE INSTALLATION IF SLEEVE LENGTH IS GREATER THAN 17 FEET AND SLIDING OF PIPE THROUGH THE SLEEVE WILL BE HINDERED BY PIPE COUPLINGS. INSTALL PULL CORD FROM END TO END FOR LOW VOLTAGE WIRE PULL.

NOTES:

1. IRRIGATION SLEEVES TO BE PVC CLASS 200 OR SCH 40 PIPE. USE THE PIPE WITH THE THICKEST WALL DIMENSION.
2. JOINTS TO BE SOLVENT WELDED AND WATERTIGHT.
3. IF PIPING IS TO BE INSTALLED AFTER SLEEVING IS BACKFILLED, MARK SLEEVE LOCATION WITH A T. CHRISTY ENTERPRISES FIBERGLASS COMPOSITE MARKING POST, LABELED "IRRIGATION", EXPOSED AT GRADE, MODEL #ID-SF66-IRR.
4. MECHANICALLY TAMP BACKFILL TO 95% COMPACTION.
5. INSTALL SLEEVES LEVEL AND AFTER PIPE INSTALLATION, SEAL ENDS OF PIPE WITH GROUT TO PREVENT ROOT INTRUSION INTO THE SLEEVE.

5 SLEEVE INSTALLATION
NOT TO SCALE

DO NOT COPY WITHOUT WRITTEN PERMISSION OF JDE © 1999

INSTALLATION NOTES:

1. INSTALL QUANTITY OF BUBBLERS PER "TREE BUBBLER QUANTITY CHART" AND LEGEND, SEE SHEET L2.1.
2. INSTALL DEEP WATERING TUBE ADJACENT AND AGAINST THE ROOTBALL.

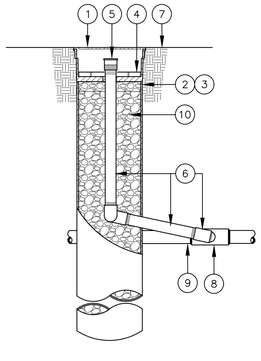

1. ROOT WATERING SYSTEM: RAIN BIRD RWS-BG (INCLUDES CANISTER, BUBBLER WITH SWING JOINT RISER AND GRATE)
2. 4" BASKET WEAVE CANISTER* –PLACE AGAINST TREE ROOTBALL
3. RAIN BIRD RWS SOCK*
4. 4" GRATE*
5. BUBBLER*
6. RAIN BIRD SWING JOINT RISER ASSEMBLY*
7. FINISH GRADE
8. PVC SCH 40 TEE OR ELL
9. LATERAL PIPE
10. PLACE DRAIN ROCK INSIDE THE CANISTER FROM UNDER THE BUBBLER PLATE TO THE BOTTOM OF THE CANISTER

* RAIN BIRD ROOT WATERING SYSTEM INCLUDES CANISTER, BUBBLER, SWING JOINT RISER, SOCK AND PURPLE GRATE

1 TREE DEEP ROOT WATERING SYSTEM
NOT TO SCALE

DO NOT COPY WITHOUT WRITTEN PERMISSION OF JDE © 1999

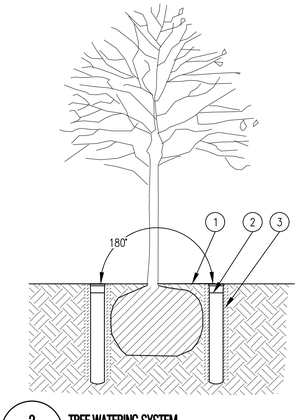

1. FINISH GRADE
2. ROOT WATERING SYSTEM: RAIN BIRD RWS-BCG (INCLUDES BUBBLER, CHECK VALVE AND GRATE)
3. RAIN BIRD RWS SOCK

NOTES:

1. WHERE TWO UNITS ARE SPECIFIED, POSITION UNITS SPACED AT 180 DEGREES AROUND ROOT BALL.
2. INSTALL PRODUCT WITH TOP GRATE EVEN WITH GROUND SURFACE.

2 TREE WATERING SYSTEM
NOT TO SCALE

DO NOT COPY WITHOUT WRITTEN PERMISSION OF JDE © 1999

RECYCLED WATER ITEMS:

R1. RECYCLED WATER TAG – ATTACH TO FLEX RISER, USE T. CHRISTY ENTERPRISES RISER MARKER, MODEL #5100 WITH ADHESIVE BACKING.

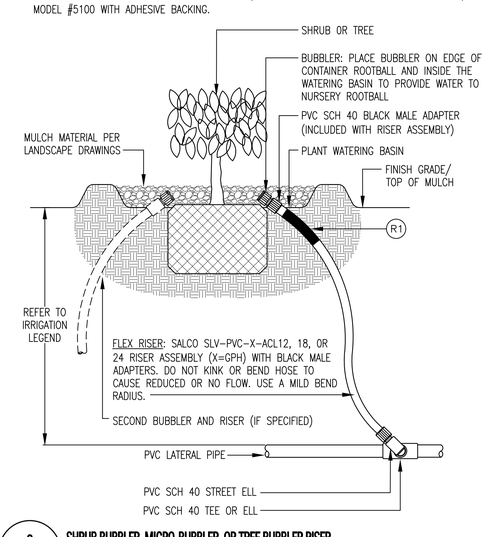

3 SHRUB BUBBLER, MICRO-BUBBLER, OR TREE BUBBLER RISER
NOT TO SCALE

DO NOT COPY WITHOUT WRITTEN PERMISSION OF JDE ©1999

IDENTIFICATION STAMP
DIV. OF THE STATE ARCHITECT
APP: 01-119994 INC:
REVIEWED FOR
SS ☑ FLS ☑ ACS ☑
DATE: 08/16/2022

QUATTROCCHI KWOK ARCHITECTS
Main:
636 Fifth Street, Santa Rosa, CA 95404
East Bay:
55 Harrison Street, Suite 525,
Oakland, CA 94607
(707) 576-0829

GSM landscape architects, inc.
1700 Soscol Ave. Suite 23
Napa, CA 94559
707-255-4630
www.gsmlainc.com

REGISTERED LANDSCAPE ARCHITECT
GREEN STRANGE
No. 2790
Exp. 10-31-22
STATE OF CALIFORNIA

LIBERTY HIGH SCHOOL

NEW CLASSROOM BUILDING

850 2ND STREET
BRENTWOOD, CA
94513

LIBERTY UNION HIGH SCHOOL DISTRICT

REVISIONS

DSA APP NO. 01-119994

ARCH PROJECT NO:	1925.00
DRAWN BY:	JDE/ST
DRAWING SCALE:	1"=20'
PTN: 61721-83	FILE NO: 7-H4

CONSTRUCTION DOCUMENTS

JUNE 24, 2022

SHEET TITLE

IRRIGATION DETAILS

SHEET NUMBER

L3.4

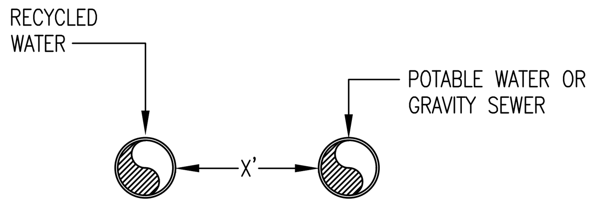

IF DIMENSION "X" IS:
LESS THAN 4' – THIS IS NOT ALLOWED

4' – 10' PIPE MUST MEET ONE OF THESE REQUIREMENTS:
- SOLVENT–WELDED PVC PIPE
- JOINT RESTRAINED PVC PIPE
- JOINT RESTRAINED DUCTILE IRON PIPE
- SOLDERED COPPER PIPE
- SLEEVED RECYCLED PIPE
- SLEEVED POTABLE PIPE

10' OR GREATER – NO SPECIAL CONSTRUCTION REQUIREMENTS

PIPE CONDITION - PARALLEL PIPES

INSTALLATION NOTES:

* NO JOINT CONTROL FOR PVC PIPE

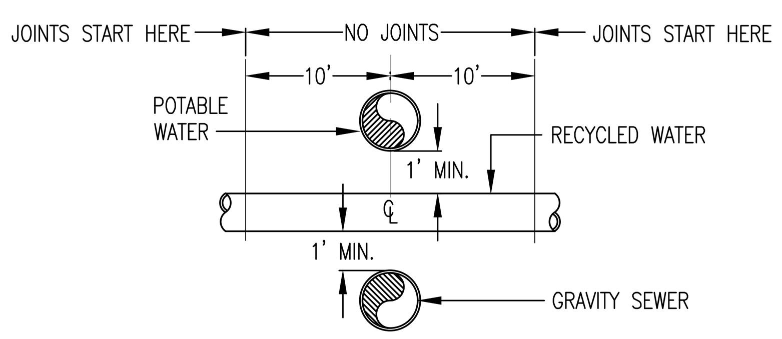

PIPE CONDITION - CROSSOVER #1

INSTALLATION NOTES:

* PROVIDE JOINT CONTROL FOR PVC PIPE
* INSTALL RECYCLED WATER PIPE BELOW POTABLE PIPE AND ABOVE STORM AND SANITARY PIPES
* INSTALLATION OF RECYCLED WATER PIPE LESS THAN 1' BELOW POTABLE PIPE OR ABOVE GRAVITY SEWER PIPE IS NOT ALLOWED

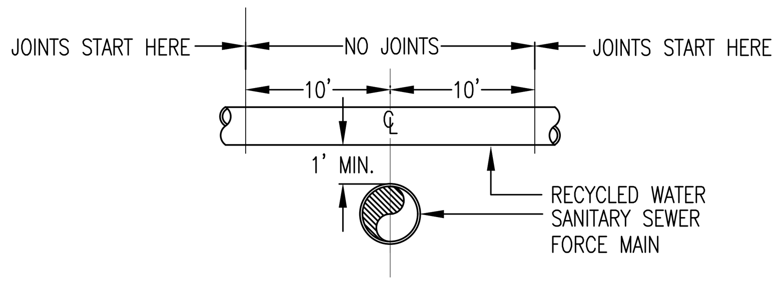

PIPE CONDITION - CROSSOVER #2

INSTALLATION NOTES:

* PVC PIPE IS NOT ALLOWED
* USE SP WITH DOUBLE WELDED JOINTS OR USE DIP WITH MECHANICAL RESTRAINT JOINTS
* LOCATE JOINTS MIN. 10' FROM THE CROSSING

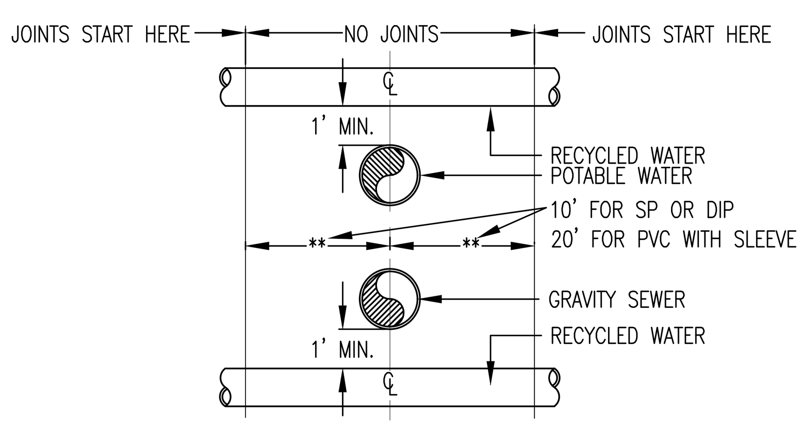

PIPE CONDITION - CROSSOVER #3

INSTALLATION NOTES:

* INSTALLATION OF RECYCLED WATER PIPE LESS THAN 1' ABOVE POTABLE PIPE IS NOT ALLOWED
* USE SP WITH DOUBLE WELDED JOINTS OR DIP WITH MECHANICAL RESTRAINT JOINTS OR PVC PIPE WITH JOINT RESTRAINT AND SLEEVED CONTINUOUSLY FOR 20' FROM THE CROSSING
* LOCATE JOINTS MIN. 10' FROM THE CROSSING (SP & DIP)

1 PIPE CLEARANCE REQUIREMENTS
NOT TO SCALE

DO NOT COPY WITHOUT WRITTEN PERMISSION OF JDE © 1999

SEPARATION STANDARDS

PARALLEL CONSTRUCTION

- WHEN THE RECYCLED WATER MAIN LINE PIPE IS AT LEAST 10 FEET (MEASURED FROM EDGE OF PIPE TO EDGE OF OTHER PIPE) FROM POTABLE WATER, SANITARY SEWER MAINS OR STORM DRAINS, INSTALL THE RECYCLED WATER MAIN LINE PIPE USING THE SPECIFIED PVC PIPE, WITHOUT CONCERN WHERE PIPE JOINTS ARE LOCATED.
- WHEN THE RECYCLED WATER MAIN LINE PIPE IS LOCATED NEAR A SEWER FORCE MAIN, INSTALL THE RECYCLED WATER MAIN LINE PIPE MAINTAINING THE 10 FOOT MINIMUM SEPARATION REQUIREMENT AND INSTALL STEEL PIPE (SP) WITH DOUBLE WELDED JOINTS OR DUCTILE IRON PIPE (DIP) WITH MECHANICALLY RESTRAINED JOINTS INSTEAD OF THE PVC PIPE AS SPECIFIED.

CROSSING CONSTRUCTION

- REFER TO CROSSOVER #1 DETAIL: WHERE THE RECYCLED WATER MAIN LINE PIPE IS INSTALLED ABOVE OR BELOW UNDERGROUND UTILITY PIPE OR CONDUIT, LOCATE THE RECYCLED WATER MAIN LINE PIPE JOINTS AT LEAST 5 FEET FROM THE UTILITY PIPE OR CONDUIT, MEASURED FROM THE CENTERLINE OF THE UTILITY PIPE OR CONDUIT AND TO THE JOINT. UTILITY LINES MAY BE:
  1. POTABLE WATER PIPE
  2. SANITARY SEWER PIPE
  3. STORM DRAIN PIPE
  4. NATURAL GAS PIPE
  5. ELECTRICAL DUCTS

  PVC PIPE IS ACCEPTABLE FOR USE IN THIS SITUATION.
- REFER TO CROSSOVER #2 DETAIL: WHEN CROSSING A SANITARY SEWER FORCE MAIN, LOCATE THE RECYCLED WATER MAIN LINE PIPE AT LEAST 1 FOOT ABOVE THE FORCE MAIN. INSTALL STEEL PIPE WITH DOUBLE WELDED JOINTS OR DUCTILE IRON PIPE WITH MECHANICALLY RESTRAINED JOINTS. LOCATE THE RECYCLED WATER PIPE JOINTS 10 FEET OR MORE AWAY FROM THE CENTERLINE OF THE SANITARY SEWER FORCE MAIN.
- REFER TO CROSSOVER #3 DETAIL: WHEN THE RECYCLED WATER MAIN LINE PIPE IS 1 FOOT ABOVE THE POTABLE WATER PIPE AND/OR 1 FOOT BELOW THE SANITARY SEWER MAIN, INSTALL STEEL PIPE WITH DOUBLE WELDED JOINTS OR DUCTILE IRON PIPE WITH MECHANICALLY RESTRAINED JOINTS. LOCATE THE JOINTS 10 FEET OR MORE AWAY FROM THE CENTERLINE OF THE SANITARY SEWER PIPES OR WATER PIPES. PVC CAN BE USED FOR THE RECYCLED WATER MAIN LINE PIPE AT THE CROSSING; INSTALL JOINT RESTRAINT DEVICES ON THE JOINTS AND A CONTINUOUS PVC SLEEVE FOR A DISTANCE OF 20 FEET ON EITHER SIDE OF THE CROSSING.

GENERAL NOTES

1. ALL STEEL PIPE USED FOR RECYCLED WATER MAIN LINE PIPE SHALL MEET A MINIMUM INTERNAL PRESSURE OF 200 PSI. NO MINIMUM PIPE WALL THICKNESS IS REQUIRED.
2. ALL DUCTILE IRON PIPE USED FOR RECYCLED WATER MAIN LINE PIPE SHALL MEET A MINIMUM INTERNAL PRESSURE OF 200 PSI. NO MINIMUM PIPE WALL THICKNESS IS REQUIRED.
3. DIP PIPE: CEMENT LINED DUCTILE IRON PIPE WITH PUSH–ON JOINTS CONFORMING TO AWWA C151. THE PUSH–ON JOINT PIPE DIMENSIONS AND WEIGHTS SHALL CONFORM TO THICKNESS CLASS 52 AS SHOWN ON TABLE 51.6: DIMENSIONS AND WEIGHTS FOR SPECIAL CLASSES OF PUSH–ON–JOINT DUCTILE IRON PIPE OF THE AWWA C151 STANDARD.
4. SP PIPE:
5. ALL PVC PIPE USED FOR RECYCLED WATER MAIN LINE PIPE SHALL BE AS SPECIFIED IN THE IRRIGATION LEGEND.
6. PROPER CORROSION PROTECTION TO PIPING IS REQUIRED. THIS INCLUDES BUT IS NOT LIMITED TO OUTSIDE COATING, INSIDE LINING, DIELECTRIC TREATMENT, AND OTHER CATHODIC PROTECTION.
7. ANY EXCEPTIONS TO THE REQUIREMENTS OF THIS DETAIL WILL REQUIRE SPECIAL REVIEW AND AN APPROVAL GRANTED BY THE CALIFORNIA DEPARTMENT OF HEALTH SERVICES.

NOTES FOR RECYCLED WATER IRRIGATION SYSTEMS

1. ALL WORK SHALL CONFORM TO EXISTING CA DEPARTMENT OF HEALTH SERVICES REGULATIONS.
2. NO CROSS–CONNECTIONS TO THE RECYCLED WATER SYSTEM ARE PERMITTED.
3. ALL ON–SITE BURIED RECYCLED WATER PIPING SHALL BE IDENTIFIED BY THE FOLLOWING METHOD: PURPLE–COLORED PVC PIPE WITH CONTINUOUS WORDING: "CAUTION – RECYCLED WATER" PRINTED ON OPPOSITE SIDES OF THE PIPE: PIPE SHALL BE LAID WITH WORDING FACING UPWARDS.
4. ALL RECYCLED WATER PIPING SHALL BE BURIED TO A MINIMUM DEPTH FROM FINISHED GRADE TO TOP OF PIPE (MINIMUM COVER) OF:
   A. PRESSURIZED LINES OF 3 INCH DIA. OR LARGER: 24 INCH COVER.
   B. PRESSURIZED LINE 2–1/2 INCH DIA. AND SMALLER: 18 INCH COVER.
   C. INTERMITTENT–PRESSURE LINES: 12 INCHES.
6. ALL RECYCLED WATER PIPING, OTHER THAN PVC PIPING WITH SOLVENT WELDED JOINTS, SHALL BE PROTECTED AGAINST MOVEMENT WITH THRUST BLOCKS OR RESTRAINED JOINTS OR OTHER APPROVED METHOD.
7. MAINTAIN A 10–FOOT HORIZONTAL SEPARATION BETWEEN PRESSURIZED RECYCLED WATER IRRIGATION PIPING AND POTABLE WATER PIPING UNLESS OTHERWISE NOTED. AT PIPE CROSSINGS, RECYCLED WATER IRRIGATION WATER PIPING MUST BE 12 INCHES BELOW POTABLE WATER LINES. IF RECYCLED WATER PIPING MUST CROSS OVER POTABLE WATER LINES, THE RECYCLED WATER PIPING SHALL BE AT LEAST 12 INCHES ABOVE THE POTABLE LINES AND SHALL BE INSTALLED IN A PVC SLEEVE WHICH EXTENDS A MINIMUM OF 10 FEET ON EITHER SIDE OFF THE POTABLE WATER PIPING.
8. ALL RECYCLED WATER SYSTEM REMOTE CONTROL VALVES, ISOLATION VALVES, QUICK COUPLING VALVES, STRAINERS, AND PRESSURE–REGULATING VALVES SHALL BE INSTALLED BELOW GRADE IN VALVE BOXES. PURPLE–COLORED BOXES AND LIDS ARE ACCEPTABLE. VALVE BOXES SHALL HAVE A RECYCLED WATER USE WARNING MESSAGE PERMANENTLY MOLDED INTO THE LID.
9. NO HOSE BIBS ARE ALLOWED ON THE RECYCLED WATER IRRIGATION SYSTEM.
10. ALL RECYCLED WATER METERS, DEVICES, AND VALVES – E.G. ISOLATION VALVES, IRRIGATION CONTROLLERS, REMOTE CONTROL VALVES, PRESSURE REGULATING VALVES, QUICK COUPLING VALVES, ETC. – SHALL BE TAGGED AND THE COLOR PURPLE WHERE AVAILABLE.
11. LABEL ALL POTABLE WATER METERS AND ABOVE GROUND POTABLE WATER PIPES/DEVICES (BACKFLOW PREVENTERS, HOSE BIBS, ETC.) WITH TAGS OR LABELS READING: "POTABLE WATER" IN BLACK LETTERS ON BLUE BACKGROUND.
12. INSTALLATION OF DIRECT INJECTION SYSTEMS ON THE RECYCLED WATER IRRIGATION SYSTEM IS NOT PERMITTED.
13. ROTOR OR SPRAY HEAD OVERSPRAY IS NOT ALLOWED ON DRINKING FOUNTAINS.
14. WHEN THE CHANGE FROM POTABLE WATER TO RECYCLED WATER OCCURS: CONSPICUOUS ADVISORY SIGNS MUST BE POSTED AT ADEQUATE INTERVALS AROUND THE AREA TO INSURE PEOPLE KNOW RECYCLED WATER IS BEING USED TO IRRIGATE THE LANDSCAPE AND THIS WATER IS NOT POTABLE. SIGNS SHOULD STATE "RECYCLED WATER" AND INCLUDE THE STATEMENT "DO NOT DRINK" IN ENGLISH AND SPANISH. PROCURE APPROVED SIGNAGE FROM THE CITY OF BRENTWOOD WATER DEPARTMENT.

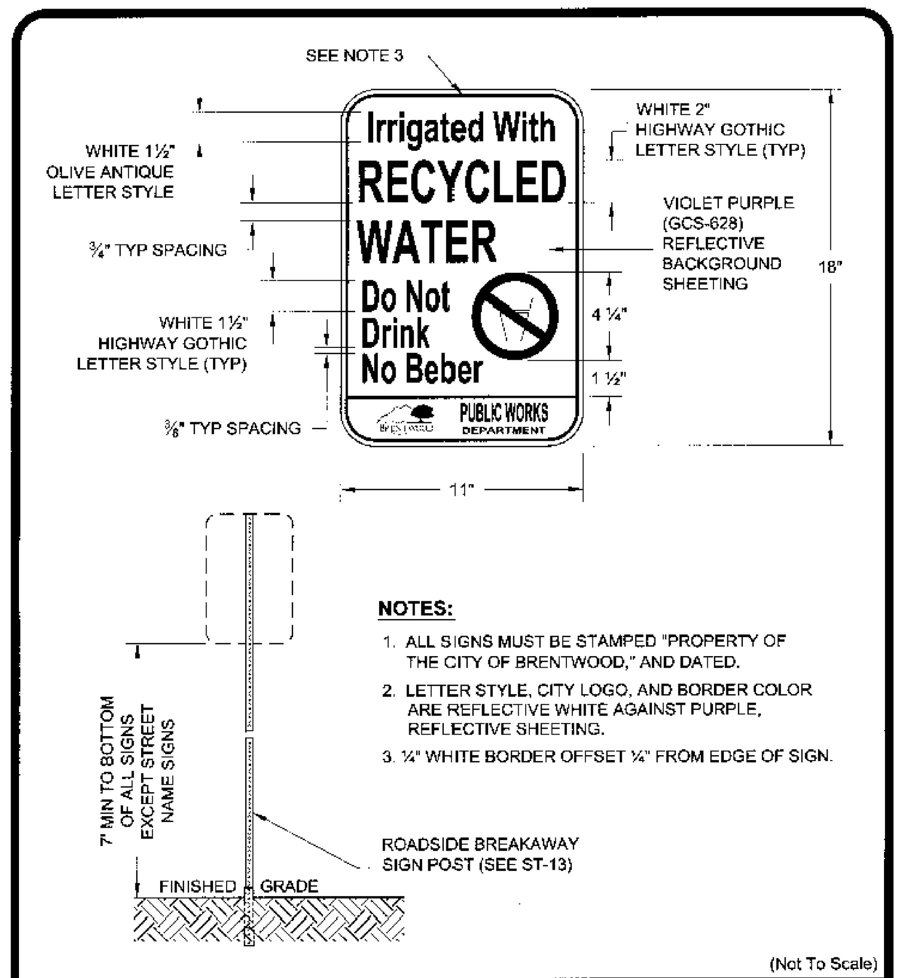

NOTES:
1. ALL SIGNS MUST BE STAMPED "PROPERTY OF THE CITY OF BRENTWOOD," AND DATED.
2. LETTER STYLE, CITY LOGO, AND BORDER COLOR ARE REFLECTIVE WHITE AGAINST PURPLE, REFLECTIVE SHEETING.
3. ¼" WHITE BORDER OFFSET ¼" FROM EDGE OF SIGN.

(Not To Scale)

REGISTERED PROFESSIONAL ENGINEER BALWINDER S. GREWAL No. 49122 Exp. 9-30-06 CIVIL STATE OF CALIFORNIA

PUBLIC WORKS DEPARTMENT — THE CITY OF BRENTWOOD

RECLAIMED WATER SIGNAGE

BALWINDER S. GREWAL CITY ENGINEER | DATE: JUNE 5, 2006 | REVISED: | SHEET NO. I-23

JDE
JAMES D. EDDY ASSOCIATES
LANDSCAPE IRRIGATION ENGINEERS
P.O. BOX 2291
DANVILLE, CALIFORNIA 94526
P:(925) 867-3339
EMAIL: JDE@EDDYASSOCIATES.COM
PLANNING~DESIGN~MANAGEMENT
JDE PROJECT NO: 20010

IRRIGATION DESIGNER: James D. Eddy
JAMES D. EDDY ASSOCIATES, DANVILLE, CALIFORNIA
NOTE: NO LICENSE FOR THE LANDSCAPE IRRIGATION SYSTEM DESIGN PROFESSION IS AVAILABLE IN THE STATE OF CALIFORNIA.
MEMBER: AMERICAN SOCIETY OF IRRIGATION CONSULTANTS

IRRIGATION SCHEDULES

NOTE: USE OF RECYCLED WATER ESTABLISHES THE WATERED AREAS AS "SPECIAL LANDSCAPED AREAS" OR "SLA".

BUBBLER IRRIGATION @ TREES – (SLA)

MANUFACTURER:	RAIN BIRD	TREE CANOPY(SQ.FT.):	19.6
MODEL:	RWS	SPECIES FACTOR(Kc):	1.0
PSI:	30	MICROCLIMATE FACTOR(Kmc):	1.0
GPM OF BUBBLER:	0.25	DENSITY FACTOR(Kd):	1.0
NO. OF BUBBLERS:	2	IRRIGATION EFFICIENCY:	0.81
GPM OF ALL BUBBLER(S):	0.5	SOIL INFILTRATION RATE(INCHES):	0.2
TREE CANOPY(FT.):	5	YEAR 2 REDUCTION AMOUNT(%):	10

	MONTH	JAN	FEB	MAR	APR	MAY	JUNE	JULY	AUG	SEP	OCT	NOV	DEC	TOTAL
ADJUSTED ETO/MONTH(INCHES)		1.0	1.5	2.9	4.5	6.1	7.1	7.9	6.7	5.2	3.2	1.4	0.7	48.3
ADJUSTED ETO/WEEK(INCHES)		0.2	0.3	0.7	1.0	1.4	1.6	1.8	1.5	1.2	0.7	0.3	0.2	
MINUTES PER WEEK	YEAR 1	7	11	21	31	42	49	54	46	36	22	10	5	
	YEAR 2	7	10	19	28	38	45	49	42	33	20	9	5	
DAYS PER WEEK	YEAR 1	1	1	2	2	3	3	3	3	3	3	2	1	
	YEAR 2	1	1	2	2	3	3	3	3	3	3	2	1	
MINUTES OF WATER PER DAY	YEAR 1	7	11	11	16	14	17	18	16	12	8	5	5	
	YEAR 2	7	10	10	15	13	16	17	15	11	8	5	5	
CYCLES PER DAY TO MEET SOIL INFILTRATION RATE	YEAR 1	2	2	2	3	3	3	3	3	2	2	1	1	
	YEAR 2	2	2	2	3	3	3	3	3	2	2	1	1	
MAX. RUN TIME (MINUTES) PER CYCLE	YEAR 1	4	6	6	6	5	6	6	6	6	4	5	5	
	YEAR 2	4	5	5	5	5	6	6	5	6	4	5	5	

BUBBLER IRRIGATION @ SHRUBS – (SLA)

MANUFACTURER:	RAIN BIRD	SHRUB CANOPY(SQ.FT.):	3.1
MODEL:	1401	SPECIES FACTOR(Kc):	1.0
PSI:	30	MICROCLIMATE FACTOR(Kmc):	1.0
GPM OF BUBBLER:	0.25	DENSITY FACTOR(Kd):	1.0
NUMBER OF BUBBLERS:	1	IRRIGATION EFFICIENCY:	0.81
GPM OF ALL BUBBLER(S):	0.25	SOIL INFILTRATION RATE(INCHES):	0.2
SHRUB CANOPY(FT.):	2	YEAR 2 REDUCTION AMOUNT(%):	10

	MONTH	JAN	FEB	MAR	APR	MAY	JUNE	JULY	AUG	SEP	OCT	NOV	DEC	TOTAL
ETO/YEAR(INCHES)		1.0	1.5	2.9	4.5	6.1	7.1	7.9	6.7	5.2	3.2	1.4	0.7	48.3
ETO/MONTH(INCHES)		0.2	0.3	0.7	1.0	1.4	1.6	1.8	1.5	1.2	0.7	0.3	0.2	
MINUTES PER WEEK	YEAR 1	3	4	7	10	14	16	18	15	12	7	4	2	
	YEAR 2	3	4	7	9	13	15	17	14	11	7	4	2	
DAYS PER WEEK	YEAR 1	1	1	2	2	3	3	3	3	3	3	2	1	
	YEAR 2	1	1	2	2	3	3	3	3	3	3	2	1	
MINUTES OF WATER PER DAY	YEAR 1	3	4	4	5	5	6	6	5	4	3	2	2	
	YEAR 2	3	4	4	5	5	6	6	5	4	3	2	2	
CYCLES PER DAY TO MEET SOIL INFILTRATION RATE	YEAR 1	2	2	2	3	3	3	3	3	2	2	1	1	
	YEAR 2	2	2	2	3	3	3	3	3	2	2	1	1	
MAX. RUN TIME (MINUTES) PER CYCLE	YEAR 1	2	2	2	2	2	2	2	2	2	2	2	2	
	YEAR 2	2	2	2	2	2	2	2	2	2	2	2	2	

SUBSURFACE EMITTER IRRIGATION IN TURF AREAS – (SLA)

MANUFACTURER:	TORO	SPECIES FACTOR(Kc):	1
MODEL:	DL2000	MICROCLIMATE FACTOR(Kmc):	1.0
PSI:	30	DENSITY FACTOR(Kd):	1.0
EMITTER SPACING (IN.):	18	IRRIGATION EFFICIENCY:	0.81
ROW SPACING(IN.):	16	SOIL INFILTRATION RATE(INCHES):	0.2
EMITTER GPH:	0.5	YEAR 2 REDUCTION AMOUNT (%):	10
PR RATE(IN./HR.):	0.4		

	MONTH:	JAN	FEB	MAR	APR	MAY	JUNE	JULY	AUG	SEP	OCT	NOV	DEC	TOTAL
ADJUSTED ETO/MONTH(INCHES)		1.0	1.5	2.9	4.5	6.1	7.1	7.9	6.7	5.2	3.2	1.4	0.7	48.3
ADJUSTED ETO/WEEK(INCHES)		0.2	0.3	0.7	1.0	1.4	1.6	1.8	1.5	1.2	0.7	0.3	0.2	
MINUTES PER WEEK	YEAR 1	42	65	123	188	255	297	330	280	218	134	59	30	
	YEAR 2	38	59	111	170	230	268	297	252	197	121	54	27	
DAYS PER WEEK	YEAR 1	1	1	2	2	4	4	4	4	4	3	2	1	
	YEAR 2	1	1	2	2	4	4	4	4	4	3	2	1	
MINUTES OF WATER PER DAY	YEAR 1	42	65	62	94	64	75	83	70	55	45	30	30	
	YEAR 2	38	59	56	85	58	68	75	63	50	41	27	27	
CYCLES PER DAY TO MEET SOIL INFILTRATION RATE	YEAR 1	2	2	2	3	2	3	3	2	2	2	1	1	
	YEAR 2	2	2	2	3	2	3	3	2	2	2	1	1	
MAX. RUN TIME (MINUTES) PER CYCLE	YEAR 1	21	33	31	32	32	25	28	35	28	23	30	30	
	YEAR 2	19	30	28	29	29	23	25	32	25	21	27	27	

SPRAY IRRIGATION @ TURF AREAS – (SLA)

MANUFACTURER:	HUNTER	Pr RATE(INCHES/HOUR):	1.8
MODEL:	PROS	SPECIES FACTOR:	1.0
PSI:	30	IRRIGATION EFFICIENCY:	0.75
SPACING(FEET):	10	SOIL INFILTRATION RATE(INCHES):	0.2
GPM:	1.6	YEAR 2 REDUCTION AMOUNT(%):	10

	MONTH	JAN	FEB	MAR	APR	MAY	JUNE	JULY	AUG	SEP	OCT	NOV	DEC	TOTAL
Eto/MONTH(INCHES)		1.0	1.5	2.9	4.5	6.1	7.1	7.9	6.7	5.2	3.2	1.4	0.7	48.3
Eto/WEEK(INCHES)		0.2	0.3	0.7	1.0	1.4	1.6	1.8	1.5	1.2	0.7	0.3	0.2	
MINUTES PER WEEK	YEAR 1	11	16	30	46	63	73	81	69	53	33	15	8	
	YEAR 2	10	15	27	42	57	66	73	63	48	30	14	8	
DAYS PER WEEK	YEAR 1	1	1	2	3	5	5	5	5	5	3	2	1	
	YEAR 2	1	1	2	3	5	5	5	5	5	3	2	1	
MINUTES OF WATER PER DAY	YEAR 1	11	16	15	16	13	15	17	14	11	11	8	8	
	YEAR 2	10	15	14	15	12	14	16	13	10	10	8	8	
CYCLES PER DAY TO MEET SOIL INFILTRATION RATE	YEAR 1	2	2	2	2	2	2	2	2	2	2	1	1	
	YEAR 2	2	2	2	2	2	2	2	2	2	2	1	1	
MAX. RUN TIME (MINUTES) PER CYCLE	YEAR 1	6	8	8	8	7	8	9	7	6	6	8	8	
	YEAR 2	5	8	7	8	6	7	8	7	5	5	8	8	

SCHEDULE NOTES:

1. THE SCHEDULES ARE INTENDED AS A GUIDE ONLY. ACTUAL WATERING TIMES WILL BE DEPENDANT ON ACTUAL Eto RATES, SOIL INFILTRATION RATE, AND SOIL WATER HOLDING CAPACITY.
2. THE SCHEDULES ARE CALCULATED BASED UPON 0% YEARLY RAINFALL.
3. PER THE CITY OF BRENTWOOD MODEL WATER EFFICIENT LANDSCAPE ORDINANCE AND CALIFORNIA STATE ORDINANCE AB 1881 THE FOLLOWING APPLIES TO THIS PROJECT:
   - THE IRRIGATION SYSTEM USES RECYCLED WATER. THE LANDSCAPE IS THEREFORE CONSIDERED A "SPECIAL LANDSCAPE AREA" (SLA).
   - THE "SPECIAL LANDSCAPED AREA" (SLA) PLANT OR SPECIES FACTOR IS A FACTOR OF 1 FOR ALL PLANTS AND TURF.

IDENTIFICATION STAMP
DIV. OF THE STATE ARCHITECT
APP: 01-119994 INC:
REVIEWED FOR
SS ☑ FLS ☑ ACS ☑
DATE: 08/16/2022

QUATTROCCHI KWOK ARCHITECTS
Main:
636 Fifth Street, Santa Rosa, CA 95404
East Bay:
55 Harrison Street, Suite 525,
Oakland, CA 94607
(707) 576-0829

GSM landscape architects, inc.
1700 Soscol Ave. Suite 23
Napa, CA 94559
707-255-4630
www.gsmlainc.com

REGISTERED LANDSCAPE ARCHITECT GRETCHEN STRANZL MAX No. 2790 Exp. 10-31-22 STATE OF CALIFORNIA

LIBERTY HIGH SCHOOL

NEW CLASSROOM BUILDING

850 2ND STREET
BRENTWOOD, CA
94513

LIBERTY UNION HIGH SCHOOL DISTRICT

REVISIONS

DSA APP NO. 01-119994

ARCH PROJECT NO: 1925.00
DRAWN BY: JDE/ST
DRAWING SCALE: 1"=20'
PTN: 61721-83 FILE NO: 7-H4

CONSTRUCTION DOCUMENTS

JUNE 24, 2022

SHEET TITLE

IRRIGATION DETAILS AND SCHEDULES

SHEET NUMBER

L3.5

PLANT LEGEND

SYMBOL		BOTANICAL NAME COMMON NAME	SIZE	WATER USE	QUANTITY
TREES					
	Fra oxy	Fraxinus oxycarpa 'Raywood' Raywood Ash	24" box/#30 Standard	M	3
	Fra vel	Fraxinus velutina 'Modesto' Modesto Ash	24" box/#30 Standard	M	2

SYMBOL		BOTANICAL NAME COMMON NAME	SIZE	WATER USE	QUANTITY
TREES cont'd.					
	Gle tri	Gleditsia tricanthos 'Shademaster' Shademaster Locust	24" box/#30 Standard	L	3

SYMBOL		BOTANICAL NAME COMMON NAME	SIZE	WATER USE	QUANTITY
SHRUBS					
	Car div	Carex divulsa Berkeley Sedge	1 gallon	L	118
	Cho tec	Chondropetalum tectorum Cape Rush	1 gallon	L	28
	Dod vis	Dodonaea viscosa 'Purpurea' Purple Hopseed	5 gallon	L	8
	Jun pat	Juncus patens California Gray Rush	1 gallon	L	13
	Mah rep	Mahonia repens Creeping Oregon Grape	5 gallon	M	57
	Nan dom	Nandina domestica 'Gulf Stream' Gulf Stream Heavenly Bamboo	1 gallon	L	42
	Ole eur	Olea europa 'Little Ollie' Fruitless Dwarf Olive	5 gallon	L	10
	Pho all	Phormium 'Allison Blackman' Allison Blackman New Zealand Flax	5 gallon	L	12
	Pit tob	Pittosporum tobira 'Cream de Mint' Variegated Dwarf Mock Orange	5 gallon	M	36
	Rha cal	Rhamnus californica 'Mound San Bruno' Mound San Bruno Coffeeberry	5 gallon	L	14
	Rib san	Ribes sanguineum Flowering Currant	5 gallon	L	8
	Ros app	Rosa 'Appleblossom' Pink Flowercarpet Rose	2 gallon	M	81
	Ses aut	Sesleria autumnalis Autumn Moor Grass	1 gallon	M	113
TURF					
		Mow Free Sod, as available through Delta Bluegrass Company. Sod shall be a blend of Sheeps Fescue, Hard Fescue, and Creeping Red Fescue.	Sod	L	400 SF
		Delta 90/10 Tall Fescue, non-netted sod as available through Delta Bluegrass Company.	Sod	SLA	2,175 SF

KEY NOTES

1. Existing tree to remain, typ. Comply with Tree Preservation Standards on L4.1.
2. Bioinfiltration Facilities. See Civil Drawings.

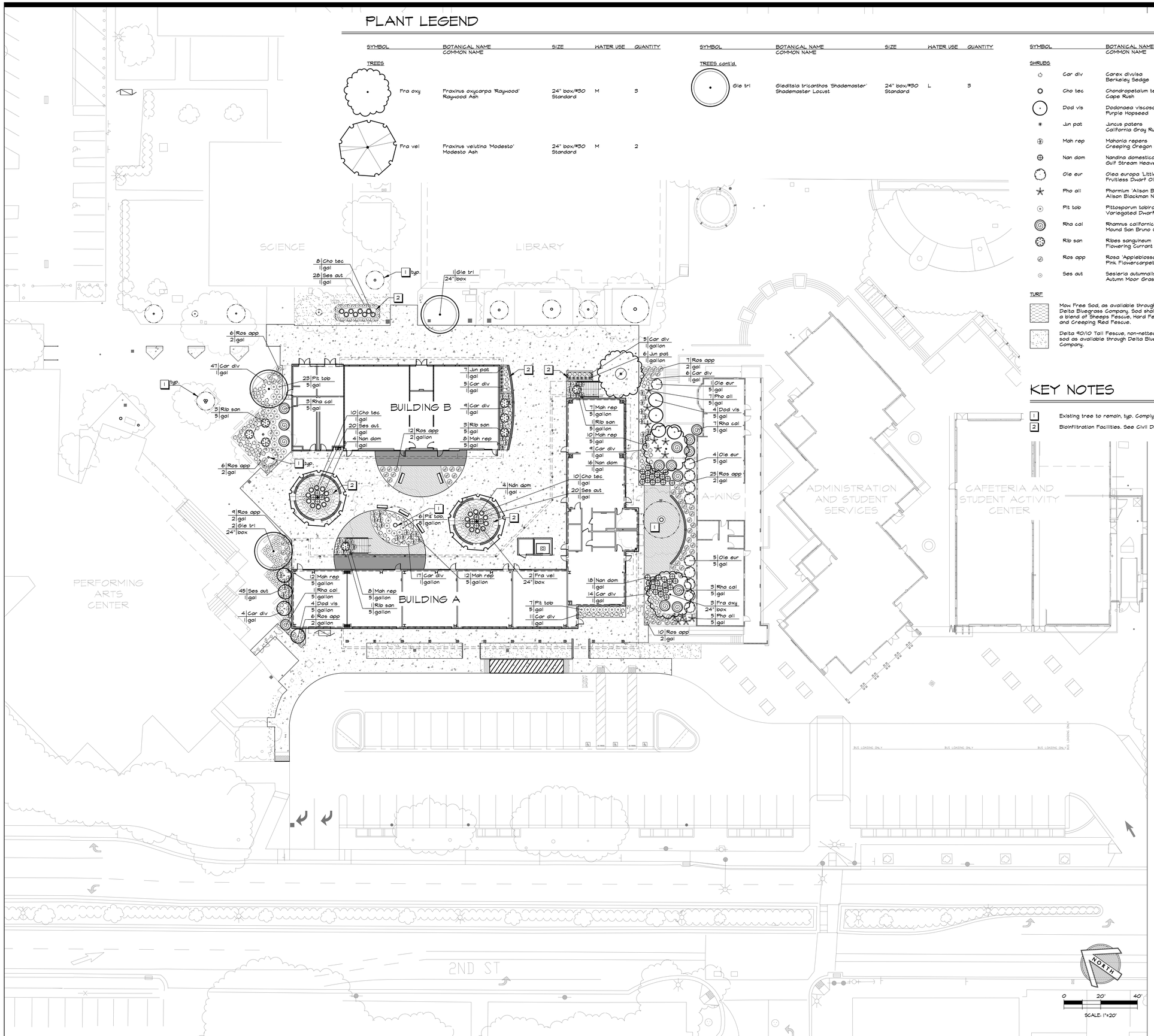

IDENTIFICATION STAMP
DIV. OF THE STATE ARCHITECT
APP: 01-119994 INC:
REVIEWED FOR
SS ☑ FLS ☑ ACS ☑
DATE: 08/16/2022

QUATTROCCHI KWOK ARCHITECTS
Main:
636 Fifth Street, Santa Rosa, CA 95404
East Bay:
55 Harrison Street, Suite 525,
Oakland, CA 94607
(707) 576-0829

GSM landscape architects, inc.
1700 Soscol Ave. Suite 23
Napa, CA 94559
707-255-4630
www.gsmlainc.com

REGISTERED LANDSCAPE ARCHITECT
GARRETT STRANZ
No. 2790
Exp. 10-31-23
STATE OF CALIFORNIA

LIBERTY HIGH SCHOOL

NEW CLASSROOM BUILDING

850 2ND STREET
BRENTWOOD, CA
94513

LIBERTY UNION HIGH SCHOOL DISTRICT

REVISIONS

DSA APP NO. 01-119994
ARCH PROJECT NO: 1925.00
DRAWN BY: BTI/HDJ
DRAWING SCALE: 1"=20'
PTN: 61721-83 FILE NO: 7-H4
CONSTRUCTION DOCUMENTS
JUNE 24, 2022

SHEET TITLE
PLANTING PLAN

SHEET NUMBER
L4.0

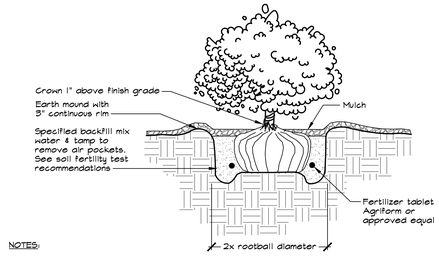

NOTES:

1. Root ball shall rest on undisturbed soil.
2. Plant tablets shall be equally spaced around root ball. The number of tablets shall be 1 for 4" pot or liner, 2 for 1 gallon, 3 for 5 gallon, and 4 for 15 gallon, or as specified in the soils fertility test recommendations.
3. Contractor shall water planting pit thoroughly following planting.
4. See Planting Notes on L4.1 for mulch specification.

1 SHRUB/GROUNDCOVER PLANTING
NOT TO SCALE

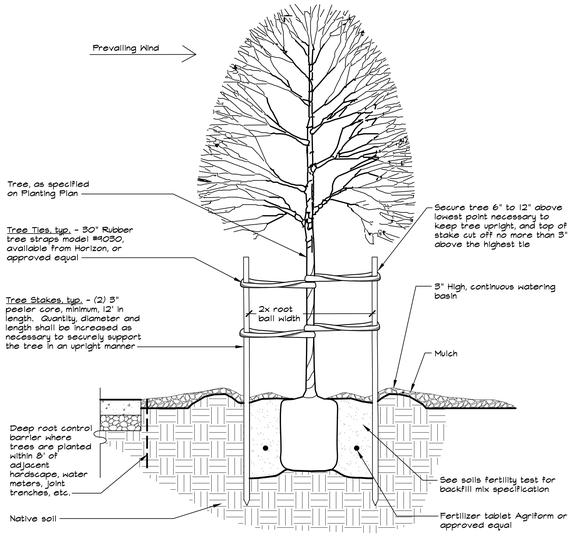

NOTES:

1. Root ball shall rest on undisturbed soil.
2. Plant tablets shall be equally spaced around root ball. The number of tablets shall be 4 for 15 gallon and 6 for 24", 36" box, or as specified in the soils fertility test recommendations.
3. Contractor shall water planting pit thoroughly following planting.
4. Trees shall be staked parallel with the direction of the prevailing wind.
5. Tree stakes shall have equal degree of separation between stakes.
7. Contractor shall use Deep Root Barrier where trees are planted within 8' of adjacent hardscape, water meters, joint trenches, etc. See Planting Notes on Planting Plan for more information.
8. See Planting Notes on L4.1 for mulch specification.

2 TREE PLANTING AND STAKING
NOT TO SCALE

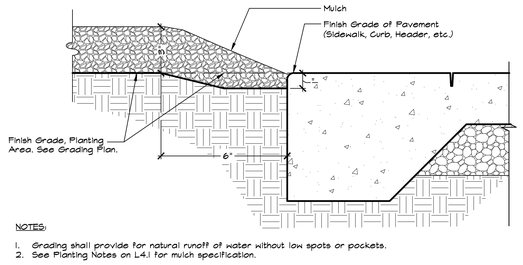

NOTES:

1. Grading shall provide for natural runoff of water without low spots or pockets.
2. See Planting Notes on L4.1 for mulch specification.

3 MULCH
NOT TO SCALE

PLANTING NOTES

1. Prior to commencement of planting, the Contractor shall verify locations of all underground utilities.
2. Contractor shall adjust all plant material around electrical utilities, valve boxes, etc., as required in the field.
3. All landscape grades shall be smooth and feathered in appearance.
4. Irrigation system shall be fully operational prior to planting. Contractor shall thoroughly water all plants immediately after planting.
5. All trees shall be staked and installed per planting details. All trees shall be of adequate trunk caliper to stand without support.
6. Installing Contractor shall verify existing grade in the field prior to planting. Finished surfaces shall be uniform and smooth. Finished grade of planting and bark mulch areas shall be flush with top of edging, pavement and walks.
7. Soil for all exposed soil and planting areas except sod and bioretention areas shall receive weed fabric and a 3" minimum depth of bark mulch. Bark mulch shall be Eco-Mini Natural Mulch, as available through EcoMulch, 5010 Pacheco Blvd., Martinez, (925) 228-1673. Bioretention areas shall receive 3" minimum depth of the compost used in the bioreatment soil mix.
8. All trees planted within 8' of adjacent paving, curbing, hardscape, water meters, joint trenches, etc. shall receive Deep Root Barrier UB 24-2 (24" depth x 10' min. length) as manufactured by Deep Root Partners (800) 458-1668, or approved equal.
9. No plant material shall be substituted without prior written consent from the Landscape Architect.
10. Contractor shall be responsible for the pre-ordering of all plant material after the Notice to Proceed. Photographs for all plants shall be submitted to the Landscape Architect prior to placing order.
11. All plant material shall be certified by the Agricultural Commissioner inspection program for freedom from the glassy winged sharpshooter or other pests identified by the Agricultural Commissioner. The Agricultural Commissioner's office shall be notified of all impending deliveries of live plants with points of origin outside of the County so that inspection can be arranged.
12. All plants of the same type and container size shall be matched in height and width.
13. The Plant Legend is provided for convenience only, not accurate bidding purposes. Graphic depiction of plant material shall take precedence over stated quantities. Contractor shall notify the Architect to obtain clarification if there are discrepancies.

SOILS MANAGEMENT NOTES

A. The following organic amendments, soil amendments and fertilizer rates and quantities shall be used for bid basis only. Contractor shall arrange and pay for soil fertility testing by an accredited soils laboratory of existing site soil after rough grading operations are complete, and shall amend the soils, according to soil laboratory's recommendations. The soils recommendations shall be considered a part of these contract documents. The soils report must provide the following information:
   1. Soil permeability rate in inches per hour.
   2. Soil texture test.
   3. Cation exchange capacity.
   4. Soil fertility, including test for nitrogen, potassium, phosphorous, pH, organic matter and specific conductance (electrical conductivity).
   5. Recommendation for amendments to the planting area soil.

B. Topsoil: All landscape areas shall have a minimum 8" depth of topsoil with greater depths as required for planting work. Contractor shall provide topsoil which is fertile and friable, possessing characteristics of representative productive soils on the site. It shall not contain toxic substances which may be harmful to plant growth. When herbicide contamination is suspected then a radish/rye grass growth trial must be performed. Consult with the District prior to decision to test. It shall be uniformly textured and free of all objectionable foreign materials, oil or chemicals which may be injurious to plant growth. Natural topsoil shall possess a pH factor between 5.5 and 7.5, a sodium absorption ratio (SAR) of less than 8, a boron concentration of the saturation extract of less than 1 ppm, and salinity of the saturation extract at 25 degrees C. of less than 4.0 millimhos per centimeter. If required to import topsoil, Contractor shall obtain topsoil from naturally well-drained sites where topsoil occurs in a depth of not less than four inches (4"); do not obtain from bogs or marshes.

C. Organic Amendment: Nitrified fir bark having a minimum organic content of 94% and a nitrogen content of 0.8% minimum to 1.2% maximum on a dry weight basis. Fir bark shall be shredded to pass a one quarter inch (1/4") mesh screen. Incorporate organic amendment and fertilizer into the soil to a minimum depth of six inches (6") at a minimum rate of six cubic yards (6 cy) per one thousand square feet (1,000 sf) or per specific amendment recommendations from the soils report.

D. Fertilizer:
   1. Fertilizer shall be a commercial inorganic fertilizer in the granular or pelleted form. Fertilizer shall be delivered to the site in containers labeled in accordance with the applicable State of California regulations, bearing the warranty of the producer or the grade furnished, and shall be uniform in composition, dry and free-flowing.
   2. Turf, Shrubs and Vines:
      a. 6N-20P-20K, and 16-6-8, pelleted type.
      b. Sulphate - sulphur
      c. Lime for pH adjustment of moderately acid soil
      d. Starting one (1) month after planting, on a monthly basis, 21N-0P-0K Ammonium sulfate. 5 lbs. per 1,000 square feet.
   3. Trees:
      a. 21 gram 20N-10P-5K slow release fertilizer tablets as manufactured by Agriform. Apply according to manufacturer's instructions.
      b. After planting: 21N-0P-0K Ammonium sulfate 5lbs. per 1,000 square feet.

TREE PRESERVATION STANDARDS

1. Tree Protection Specifications shall be utilized for the protection of trees to remain within the Limit of Work. Construction activity shall include, but is not limited to, grading, trenching, excavating, and operation of construction equipment or vehicles in the vicinity of the tree to be protected, or work which has the potential to harm or affect the health or vigor of the tree.
2. Roots of single standing trees often extend two to three times the distance of the actual drip line and function primarily in the uptake of nutrients and water. The drip line is arbitrarily established as the minimum root area generally required to preserve tree health. As much area around the circumference of the tree beyond the drip line shall have minimum intrusion to further ensure tree survival and health.
3. Original grade shall be maintained at all times in the immediate area of the root crown, where the soil contacts tree bole. No increase in grade shall be allowed under any circumstances in this area.
4. All underground work within tree drip lines shall be avoided wherever possible to reduce negative impact on trees. Underground utilities should be located well outside the tree drip line for preservation purposes.
5. All underground work required within the drip line of the trees and below original grade shall be previewed by the District to determine potential impact on trees. Hand trenching shall be required where existing tree root systems could be damaged by equipment.
6. Construction materials or facilities shall not be placed under the dripline of existing trees.
7. Root pruning shall be restricted to roots less than two (2) inches in diameter. Roots shall be cut with a sharp saw. Roots may not be severed, pulled or broken with any soil excavation equipment during grading or trenching. Cutting of roots larger than two (2) inches in diameter must be approved by the District.

TREE PROTECTION SPECIFICATIONS

Site Preparation Phase
The following work, #1 through #12, must be accomplished before any site clearing, grading or other earthwork occurs within 100 feet of trees that are to be retained.

1. The General Contractor and grading contractor are required to meet with the District's Consulting Arborist (CA) at the site prior to beginning work to review all work procedures, access routes and tree protection measures.
2. Tree Protection Zones (TPZ's) shall be a minimum of 12 times the diameter at breast height (DBH) of all protected trees. The boundaries of all TPZ's shall be staked in the field.
3. No change to grade or trenching shall take place within the Critical Radius, a minimum 5 times the DBH, of all protected trees without prior approval of the CA.
4. Trees to be removed that have branches extending into canopies of trees to remain must be removed by a qualified arborist, not by demolition or construction contractors.
5. Tree removals shall be performed so as to prevent damage to branches, trunks and roots of protected trees.
6. Trees to be removed from within a TPZ shall be removed by a qualified arborist. Stumps shall be cut as low as possible. If stump grinding is preferred by the owner or contractor, grinding shall not be deep enough to damage woody roots of adjacent protected trees.
7. All downed brush and trees shall be removed from TPZ's either by hand or with equipment sitting outside the TPZ, by lifting the material out, not by skidding across the ground.
8. Roots or other underground features to be removed where a TPZ would be disturbed shall be done so as to minimize disturbance. Equipment shall operate from outside the TPZ. The CA shall be on site during all operations within the TPZ to monitor activity.
9. Any pruning required for site preparation shall be performed by a qualified arborist and in accordance with current professional standards.
10. A four foot high visibility or comparable barrier fence, affixed with locking zip-ties to steel T posts shall be erected to fully enclose TPZ's, or partially enclose them.
11. Any tree damage resulting from grading or other site preparation work shall be reported to the Architect and CA within six hours so that remedial action can be taken. Timeliness is critical.
12. If temporary access pathways for vehicles must pass over TPZ's, Contractor shall place geogrid and a bed of 6 inches of coarse wood chip under the mulch to protect the soil and roots.

Construction Phase

13. The General Contractor and grading contractor are required to meet with the CA at the site prior to beginning work to review all work procedures, access routes and tree protection measures.
14. Tree protection fences erected before site grading shall remain in place throughout the construction phase and may not be relocated, detached or removed without written permission of the CA.
15. Construction trailers, traffic, parking and storage areas shall remain outside of fenced areas at all times.
16. All underground utilities, drainage or irrigation lines shall be routed outside the TPZ's as much as is feasible. If lines must traverse a TPZ they shall be tunneled or bored under trees, or hand excavated under observation of the CA to minimize root pruning.
17. No materials, equipment, spoil or waste or washout water shall be deposited, stored, or parked within a TPZ.
18. Additional tree pruning required for clearance during construction shall be performed by a qualified arborist and not by construction personnel.
19. If injury should occur to any tree during construction, it shall be evaluated as soon as possible by the CA so that appropriate treatments can be applied.
20. Any grading, trenching, construction, demolition or other work that is expected to encounter tree roots shall be observed by the CA.
21. The CA may require the General Contractor to apply supplementary irrigation for protected trees that have received root damage in the course of grading or construction work.
22. Before grading, pad preparation, or excavation for foundations, footings, walls, or trenching, any tree with a TPZ within or adjacent to such a location shall be evaluated by the CA and Contractor in order to establish a plan that will prevent or minimize tree damage. Such plans may include manual or pneumatic excavation to expose and evaluate roots, alternative construction techniques, root pruning observed by the CA.
23. Any woody roots damaged during grading and construction shall be exposed back to sound tissue by the Contractor and evaluated by the CA for further action, which might include cleanly severing damaged roots back to tight cambium or excising damaged bark.
24. Spoils from trenches or other excavations shall not be placed within TPZ's.
25. No debris, garbage or other waste materials shall be placed within TPZ's.
26. If temporary access pathways for vehicles must pass over TPZ's, Contractor shall place geogrid and a bed of 6 inches of coarse wood chip under the mulch to protect the soil and roots.

IDENTIFICATION STAMP
DIV. OF THE STATE ARCHITECT
APP: 01-119994 INC:
REVIEWED FOR
SS ☑ FLS ☑ ACS ☑
DATE: 08/16/2022

QUATTROCCHI KWOK ARCHITECTS
Main:
636 Fifth Street, Santa Rosa, CA 95404
East Bay:
55 Harrison Street, Suite 525,
Oakland, CA 94607
(707) 576-0829

GSM landscape architects, inc.
1700 Soscol Ave. Suite 23
Napa, CA 94559
707-255-4630
www.gsmlainc.com

REGISTERED LANDSCAPE ARCHITECT
STEPHEN STRANZ
No. 2790
Exp. 10-31-22
STATE OF CALIFORNIA

LIBERTY HIGH SCHOOL

NEW CLASSROOM BUILDING

850 2ND STREET
BRENTWOOD, CA
94513

LIBERTY UNION HIGH SCHOOL DISTRICT

REVISIONS

DSA APP NO. 01-119994

ARCH PROJECT NO:	1925.00
DRAWN BY:	BTI/HDJ
DRAWING SCALE:	NONE
PTN: 61721-83	FILE NO: 7-H4

CONSTRUCTION DOCUMENTS

JUNE 24, 2022

SHEET TITLE

PLANTING DETAILS AND NOTES

SHEET NUMBER

L4.1

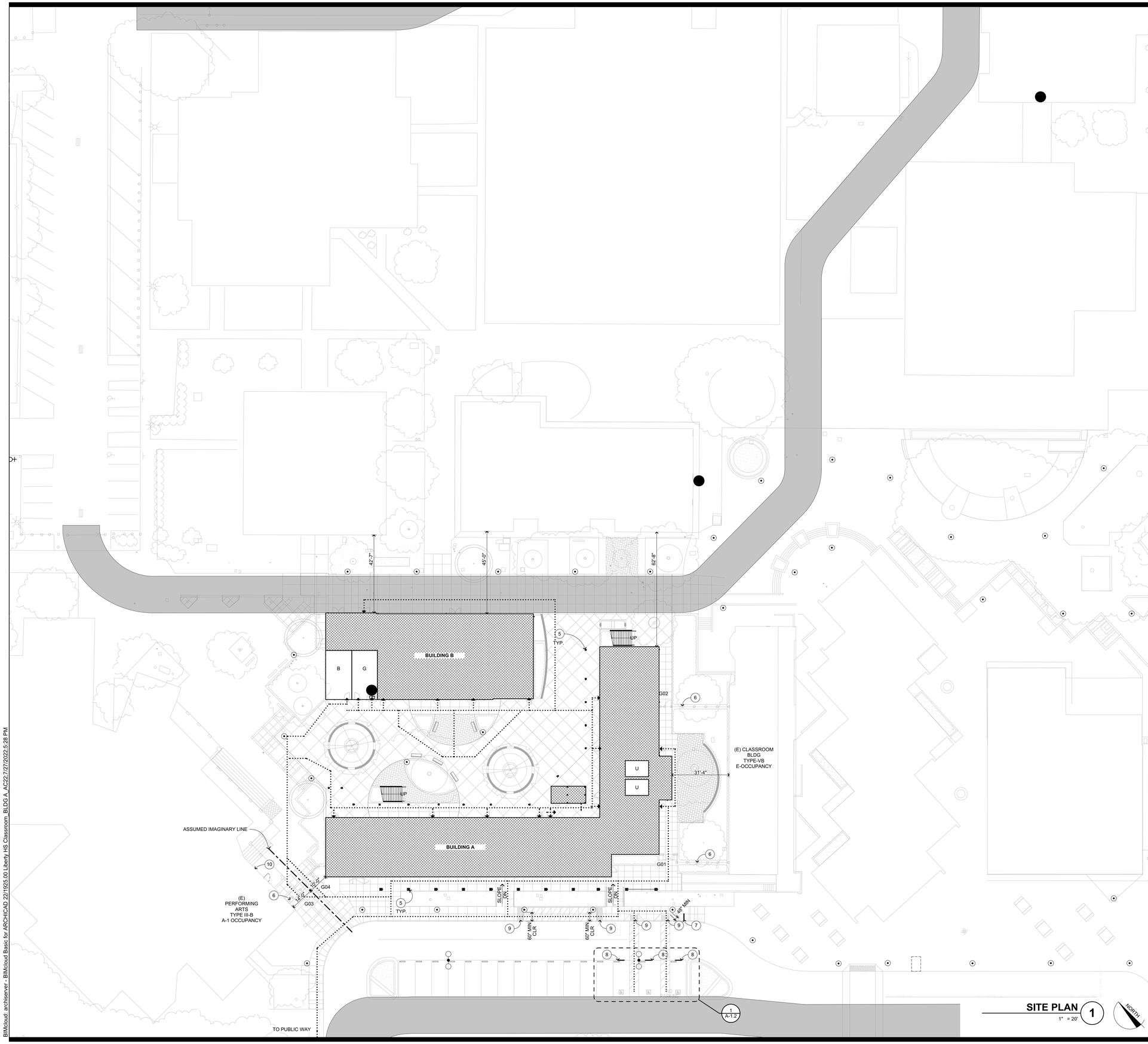

SITE PLAN 1

1" = 20'

SITE PLAN KEYNOTES

NOT ALL KEYNOTES MAY APPLY TO THIS SHEET

1. FIRE SPRINKLER RISER, S.P.D.
2. MECHANICAL ITEM, S.M.D.
3. PLUMBING ITEM / FIXTURE, S.P.D.
4. ELECTRICAL ITEM, S.E.D.
5. STRUCTURAL ITEM, S.S.D.
6. ORNAMENTAL FENCE AND GATE, S.L.D.
7. ACCESSIBLE PASSENGER LOADING ZONE SIGNAGE, SEE #DrgID/#LayID
8. (E) ACCESSIBLE PARKING SIGNAGE, SEE 2/A-1.2
9. TACTILE WARNING STRIP, S.C.D. AND SEE 5/A-1.2
10. OPENINGS CALCULATION OF (E) EXTERIOR WALL SEE 3/A-1.2

SITE PLAN NOTES

1. IMPERVOUS SUFACES WTIHIN 10 FEET OF THE BUILDING FOUNDATION SHALL BE SLOPED NOT LESS THAN 2% AWAY FROM THE BUILDING. SUCH SURFACES SHALL BE PERMITTED TO SLOPE LESS THAN 2% WHERE THE SURFACE IS A DOOR LANDING OR REQUIRED RAMP.
2. SEE SHEET A-1.1 FOR ACCESSIBLE ROUTE (PATH OF TRAVEL) INFORMATION
3. SEE SHEETS G-0.4 AND G-0.5 FOR CODE INFORMATION
4. REFER TO CIVIL ENGINEERING DWGS FOR SIDEWALK GRADES
5. REFER TO CIVIL ENGINEERING DRAWINGS AND LANDSCAPE PLANS FOR SITE FEATURES NOT OTHERWISE INDICATED.

DESIGN PROFESSIONAL IN GENERAL RESPONSIBLE CHARGE THE ARCHITECT VERIFIES THAT THERE ARE NO BARRIERS IN THE ACCESSIBLE ROUTE SERVING THE AREA OF WORK.
THE ACCESSIBLE ROUTE (PATH OF TRAVEL = P.O.T.) IDENTIFIED IN THESE CONSTRUCTION DOCUMENTS IS COMPLIANT WITH THE CURRENT APPLICABLE CALIFORNIA BUILDING CODE ACCESSIBILITY PROVISIONS FOR PATH OF TRAVEL REQUIREMENTS FOR ALTERATIONS, ADDITIONS AND STRUCTURAL REPAIRS. AS PART OF THE DESIGN OF THIS PROJECT THE P.O.T. WAS EXAMINED.
ANY ELEMENT, COMPONENTS OR PORTIONS OF THE P.O.T. THAT WERE DETERMINED TO BE NONCOMPLIANT HAVE BEEN IDENTIFIED AND THE CORRECTIVE WORK NECESSARY TO BRING THEM INTO COMPLIANCE HAS BEEN INCLUDED WITHIN THE SCOPE OF THIS PROJECT'S WORK THROUGH DETAILS, DRAWINGS AND SPECIFICATIONS INCORPORATED INTO THESE CONSTRUCTION DOCUMENTS.
ANY NONCOMPLIANT ELEMENT, COMPONENT, OR PORTION OF THE P.O.T. THAT WILL NOT BE CORRECTED BY THIS PROJECT BASED ON VALUATION THRESHOLD LIMITATIONS OR A FINDING OF UNREASONABLE HARDSHIP ARE SO INDICATED IN THESE CONSTRUCTION DOCUMENTS.

DURING CONSTRUCTION IF P.O.T. ITEMS WITHIN THE SCOPE OF THE PROJECT REPRESENTED AS CODE-COMPLIANT ARE FOUND TO BE NONCONFORMING BEYOND REASONABLE CONSTRUCTION TOLERANCES, THEY SHALL BE BROUGHT INTO COMPLIANCE WITH THE CBC AS A PART OF THIS PROJECT BY MEANS OF A CONSTRUCTION CHANGE DOCUMENT.

INDICATES ACCESSIBLE ROUTE (ADA 2010 "PATH OF TRAVEL")

THE ACCESSIBLE ROUTE (PATH OF TRAVEL) INDICATED HAS BEEN PROVIDED IN ACCORDANCE WITH IR 11B-10 AND SHALL COMPLY WITH THE FOLLOWING:
- 1:20 MAXIMUM SLOPE WITHOUT A RAMP HANDRAIL
- 1:48 MAXIMUM CROSS SLOPE
- NO ABRUPT VERTICAL CHANGES EXCEEDING 1/4". CHANGES BETWEEN 1/4" TO 1/2" VERTICAL CAN BE AT 1:2 MAX SLOPE. CHANGES LESS THAN 1/4" CAN BE VERTICAL
- 48" MIN. CLEAR IN WIDTH (60" MIN PASSING SPACE EVERY 200 LINEAL FEET)
- NON-SLIP SURFACE –HEAVY BROOM FINISH AT EXTERIOR CONCRETE PAVING WHERE SLOPED >6%, MEDIUM BROOM FINISH AT SLOPES <6%
- MAINTAIN FREE OF OVERHANGING OBSTRUCTIONS TO 80" MIN
- PROTRUDING OBJECTS NOT GREATER THAN 4" SHALL BE MOUNTED BETWEEN 27" AND 80" A.F.F.
- WHERE A DRAIN INLET IS IN THE PATH OF TRAVEL, THE GRATE SHALL BE ORIENTED SO THAT MAX OPENING IS 1/2" & LONG DIM IS PERPENDICULAR TO THE PREDOMINANT DIRECTION OF PEDESTRIAN TRAVEL
- CONTRACTOR TO VERIFY THAT NO BELOW-GRADE PULL BOXES OCCUR WITHIN THE AREA OF TRUNCATED DOMES

PARKING AND PEDESTRIAN SITE SIGNAGE SHALL COMPLY WITH CBC SECTIONS 11B-502.6 11B-502.8 & 11B-703.7.2.1
BUILDING SIGNAGE SHALL COMPLY WITH CBC 11B-703

PEDESTRIAN GATES SHALL COMPLY WITH CBC 1010.2 & 11B-206.5

SITE PLAN LEGEND

- NEW BUILDING
- (E) BUILDING TO REMAIN
- 20' EMERGENCY VEHICLE ACCESS
- PROPERTY LINE
- ACCESSIBLE PATH OF TRAVEL
- U — UNISEX RESTROOM
- B — BOYS RESTROOM
- G — GIRLS RESTROOM
- S — STAFF RESTROOM
- ACCESSIBLE HI-LO DRINKING FOUNTAIN
- ELECTRICAL ITEM, S.E.D.
- (E) FIRE HYDRANT

KEY PLAN

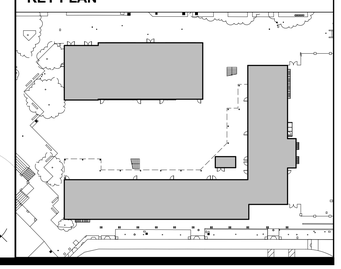

IDENTIFICATION STAMP
DIV. OF THE STATE ARCHITECT
APP: 01-119994 INC:
REVIEWED FOR
SS ☑ FLS ☑ ACS ☑
DATE: 08/16/2022

QUATTROCCHI KWOK ARCHITECTS
Main:
636 Fifth Street, Santa Rosa, CA 95404
East Bay:
55 Harrison Street, Suite 525,
Oakland, CA 94607
(707) 576-0829

LICENSED ARCHITECT
JIM THEISS
LICENSE # C22643
EXP JUNE 30, 2023
STATE OF CALIFORNIA

SIGNED: JUNE 24, 2022

LIBERTY HIGH SCHOOL

NEW CLASSROOM BUILDINGS

850 2ND STREET
BRENTWOOD, CA
94513

LIBERTY UNION HIGH SCHOOL DISTRICT

DSA APP NO.	01-119994
ARCH PROJECT NO:	1925.00
DRAWN BY:	JDS
DRAWING SCALE:	1" = 20'-0"
PTN: 61721-83	FILE NO: 7-H4

CONSTRUCTION DOCUMENTS

JUNE 24, 2022

SHEET TITLE

SITE PLAN

SHEET NUMBER

A-1.1

BIMcloud: archiserver - BIMcloud Basic for ARCHICAD 22/1925.00 Liberty HS Classroom: BLDG A, AC22 7/27/2022-5:28 PM

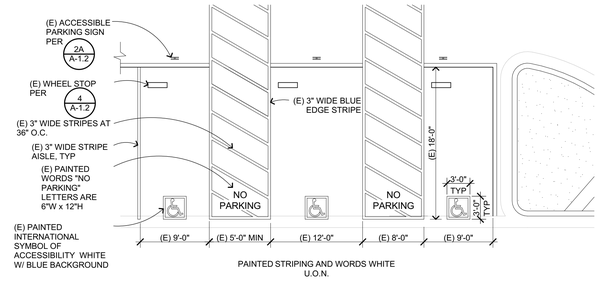

(E) ACC PARKING SPACES - 01-119033

1/8" = 1'-0" G202101_1925.00 **1**

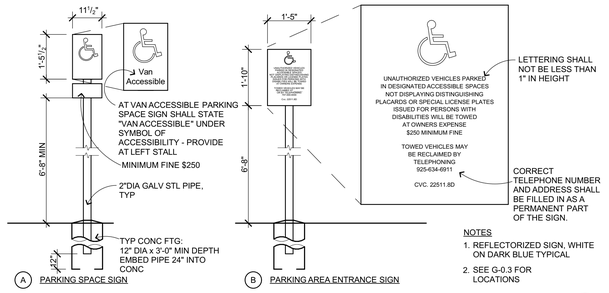

NOTES

1. REFLECTORIZED SIGN, WHITE ON DARK BLUE TYPICAL
2. SEE G-0.3 FOR LOCATIONS

ACCESSIBLE PARKING SIGNAGE

1/2" = 1'-0" G202201 **2**

CALCULATIONS FOR ALLOWABLE OPENINGS AT (E) PERFORMING ARTS BUILDING
TOTAL WALL AREA: 533.94 SQ. FT.
OPENING AREA: 26.70 SQ. FT.
26.70 SQ. FT. / 533.94 SQ. FT. = 0.05 = 5% OPENING
15% MAXIMUM ALLOWED PER CBC TABLE IS 705.8

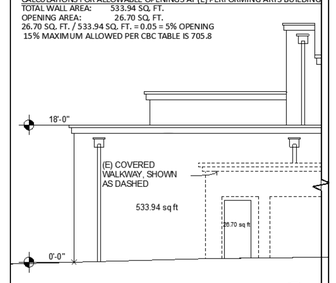

(E) EXTERIOR ELEVATION

1/8" = 1'-0" **3**

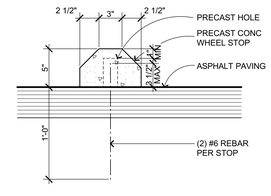

WHEEL STOP

1 1/2"= 1'-0" G204302 **4**

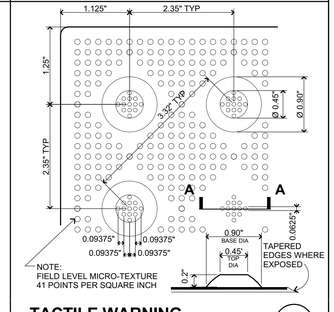

TACTILE WARNING

1' = 1'-0" G202103 **5**

IDENTIFICATION STAMP
DIV. OF THE STATE ARCHITECT
APP: 01-119994 INC:
REVIEWED FOR
SS ☑ FLS ☑ ACS ☑
DATE: 08/16/2022

QUATTROCCHI KWOK ARCHITECTS
Main:
636 Fifth Street, Santa Rosa, CA 95404
East Bay:
55 Harrison Street, Suite 525,
Oakland, CA 94607
(707) 576-0829

LICENSED ARCHITECT
JIM THEISS
LICENSE # C22643
EXP JUNE 30, 2023
STATE OF CALIFORNIA

SIGNED: JUNE 24, 2022

LIBERTY HIGH SCHOOL

NEW CLASSROOM BUILDINGS

850 2ND STREET
BRENTWOOD, CA
94513

LIBERTY UNION HIGH SCHOOL DISTRICT

DSA APP NO. 01-119994
ARCH PROJECT NO: 1925.00
DRAWN BY:
DRAWING SCALE:
PTN: 61721-83 FILE NO: 7-H4
CONSTRUCTION DOCUMENTS
JUNE 24, 2022

SHEET TITLE

SITE DETAILS

SHEET NUMBER

A-1.2

BIMcloud: archiserver - BIMcloud Basic for ARCHICAD 22/1925.00 Liberty HS Classroom, BLDG A, AC22 7/27/2022 5:28 PM

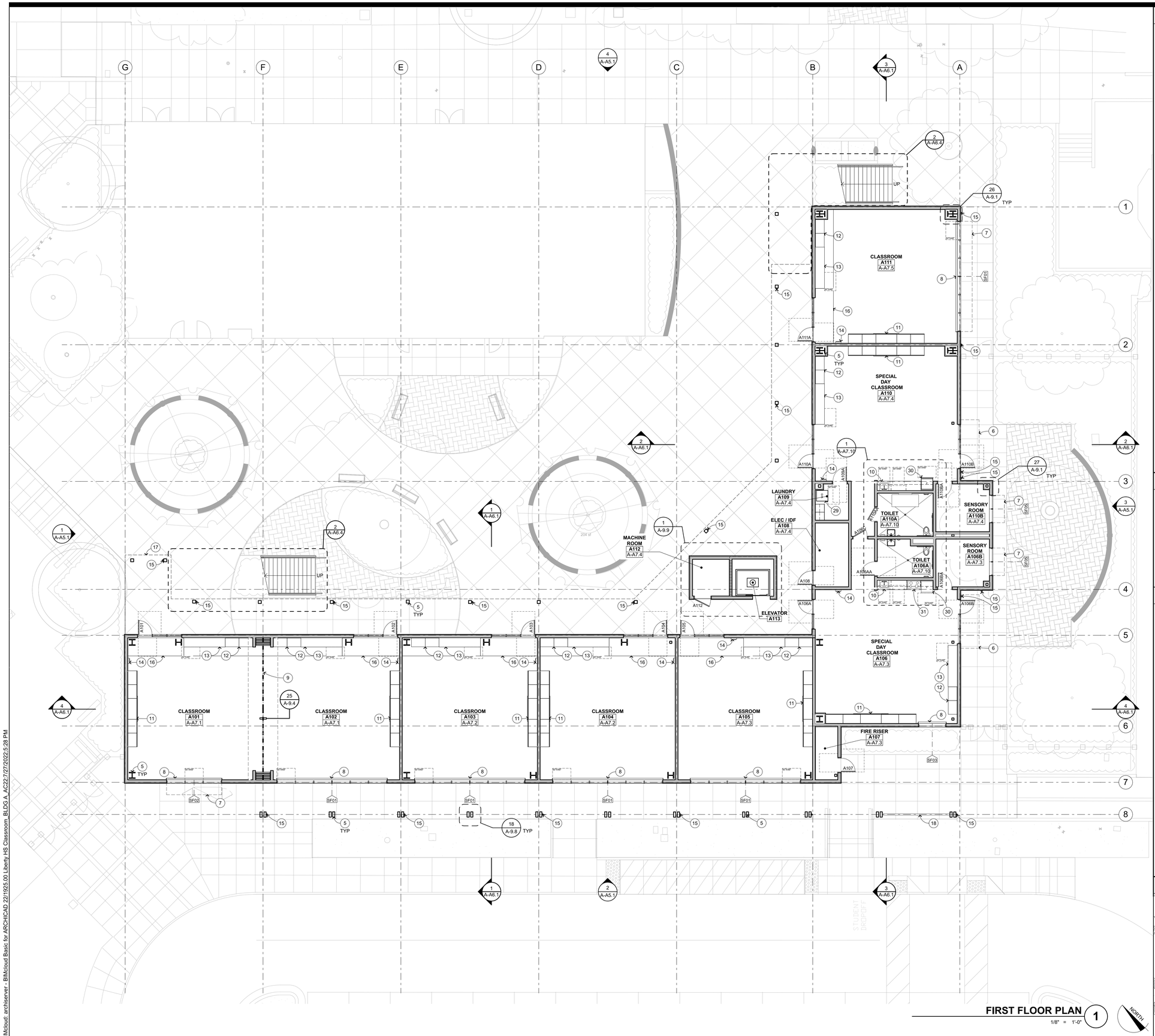

FIRST FLOOR PLAN 1

1/8" = 1'-0"

NORTH

FLOOR PLAN KEYNOTES

NOT ALL KEYNOTES MAY APPLY TO THIS SHEET

1. FIRE SPRINKLER RISER, S.P.D.
2. MECHANICAL ITEM, S.M.D.
3. PLUMBING ITEM / FIXTURE, S.P.D.
4. ELECTRICAL ITEM, S.E.D.
5. STRUCTURAL ITEM, S.S.D.
6. INTEGRATED RAIN CANOPY ABOVE
7. SHADE STRUCTURE ABOVE
8. MANUAL WINDOW SHADES, SEE 13/A-9.4
9. FOLDING PANEL PARTITION
10. ACCESSIBLE BASE CABINET W/ SINK
11. CUSTOM CASEWORK W/ MARKERBOARD, SEE 2/A-10.5
12. CASEWORK, SEE 3/A-10.4
13. BASE CABINETS W/ COUNTERTOP
14. RECESSED FIRE EXTINGUISHER CABINET, SEE 13/A-10.3 SIM
15. RAINWATER LEADER, SEE 9/A-9.8
16. INTEGRATED WALK-OFF CARPET, SEE FINISH PLANS
17. SECOND LEVEL DECK OVERHEAD
18. PERFORATED METAL SIGANGE, SEE 22/A-9.8
19. ROOF ACCESS LADDER, SEE 24/A-9.7 MTL 25/A-9.7 WD
20. MOP SINK
21. TEACHER'S DEMONSTRATION TABLE, SEE 18/A-10.4
22. EPOXY RESIN, SCIENCE LAB STATION W/ SINK AND GAS BURNER
23. ACCESSIBLE HEIGHT SCIENCE LAB STATION
24. EMERGENCY EYEWASH STATION, S.P.D.
25. FUME HOOD, S.M.D.
26. ROOF LINE ABOVE
27. FREESTANDING SS SINK, S.P.D.
28. ACCESSIBLE HI-LO DRINKING FOUNTAIN W/ BOTTLE FILLER, SEE 2/A-10.3 7/A-10.3
29. WASHER/DRYER ALL-IN-ONE COMBO, OFCI. PER CBC 11B-611
30. REFRIGERATOR W/ BOTTOM FREEZER, OFCI. PER CBC 11B-804.6.6
31. ELECTRIC OVEN RANGE WITH FRONT CONTROLS , OFCI. PER CBC 11B-804.6.4
32. 4x8' WALL MOUNTED MARKBOARD, SEE 34/A-10.3

FLOOR PLAN GENERAL NOTES

1. FOR SITE CONDITIONS SEE SITE PLAN SHEET A1.1
2. FINISHED FLOOR ELEVATIONS SHOWN INDICATE FLOOR SLABS FOR THIS BUILDING. FOR ELEVATIONS RELATIVE TO THE REST OF THE SITE, REFER TO CIVIL ENGINEERING DRAWINGS.
3. REFER TO CIVIL ENGINEERING DRAWINGS AND SITE PLAN FOR SITE FEATURES NOT OTHERWISE INDICATED.
4. REFER TO ARCHITECTURAL GRAPHICS DRAWINGS FOR SIGNAGE NOT SHOWN.
5. REFER TO REFLECTED CEILING PLAN FOR CLERESTORY WINDOWS.
6. ALL INTERIOR WALL FRAMING AND GYP.BD. EXTEND TO UNDERSIDE OF ROOF /FLOOR SHEATHING ABOVE, U.O.N.
7. ALL EXPOSED STRUCTURAL ELEMENTS SHALL BE PRIMED AND PAINTED PER SPECS AND FINISH SCHEDULE, U.O.N.

WALL TYPE LEGEND

WD FRAMING: 6" STUDS, TYP U.O.N.
MTL FRAMING: 6" STUDS, TYP U.O.N.

- EXT WALL MTL FRMG W/ CEM PL O/ INSUL BD, SEE 4/A-9.1
- INT WALL MTL FRMG W/ GYP BD ON EA SIDE, SEE 22/A-9.1
- INT FURRING WALL MTL FRMG 22/A-9.1 SIM 21/A-9.1
- METAL FRAMING - 1 HOUR RATED
- EXT WALL WD FRMG W/ CEM PL O/ INSUL BD, SEE 4/A-9.2
- INT WALL WD FRMG W/ GYP BD ON EA SIDE, SEE 24/A-9.2
- INT FURRING WALL WD FRMG 24/A-9.2 SIM 23/A-9.2
- WD FRAMING - 1 HOUR RATED
- 6" METAL STUD SIZE, 6" U.O.N.
- 45 ACOUSTIC RATING (STC), SEE 28/A-9.3
- 101A DOOR A IN ROOM NUMBER 101 IN BUILDING B ACCESSIBLE CLEARANCES SHOWN DASHED SEE 2/A-8.1
- W03 WINDOW NUMBER 03

KEY PLAN

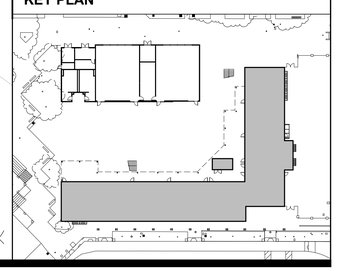

IDENTIFICATION STAMP
DIV. OF THE STATE ARCHITECT
APP: 01-119994 INC:
REVIEWED FOR
SS ☑ FLS ☑ ACS ☑
DATE: 08/16/2022

QUATTROCCHI KWOK ARCHITECTS
Main:
636 Fifth Street, Santa Rosa, CA 95404
East Bay:
55 Harrison Street, Suite 525,
Oakland, CA 94607
(707) 576-0829

LICENSED ARCHITECT
JIM THEISS
LICENSE # C22643
EXP JUNE 30, 2023
STATE OF CALIFORNIA

SIGNED: JUNE 24, 2022

LIBERTY HIGH SCHOOL

NEW CLASSROOM BUILDINGS

850 2ND STREET
BRENTWOOD, CA
94513

LIBERTY UNION HIGH SCHOOL DISTRICT

DSA APP NO. 01-119994

ARCH PROJECT NO:	1925.00
DRAWN BY:	JDS
DRAWING SCALE:	1/8" = 1'-0"
PTN: 61721-83	FILE NO: 7-H4

CONSTRUCTION DOCUMENTS

JUNE 24, 2022

SHEET TITLE

BLDG A - FIRST FLOOR PLAN

SHEET NUMBER

A-A2.1

BIMcloud: archiserver - BIMcloud Basic for ARCHICAD 22/1925.00 Liberty HS Classroom_BLDG A_AC22-7/27/2022-5:28 PM

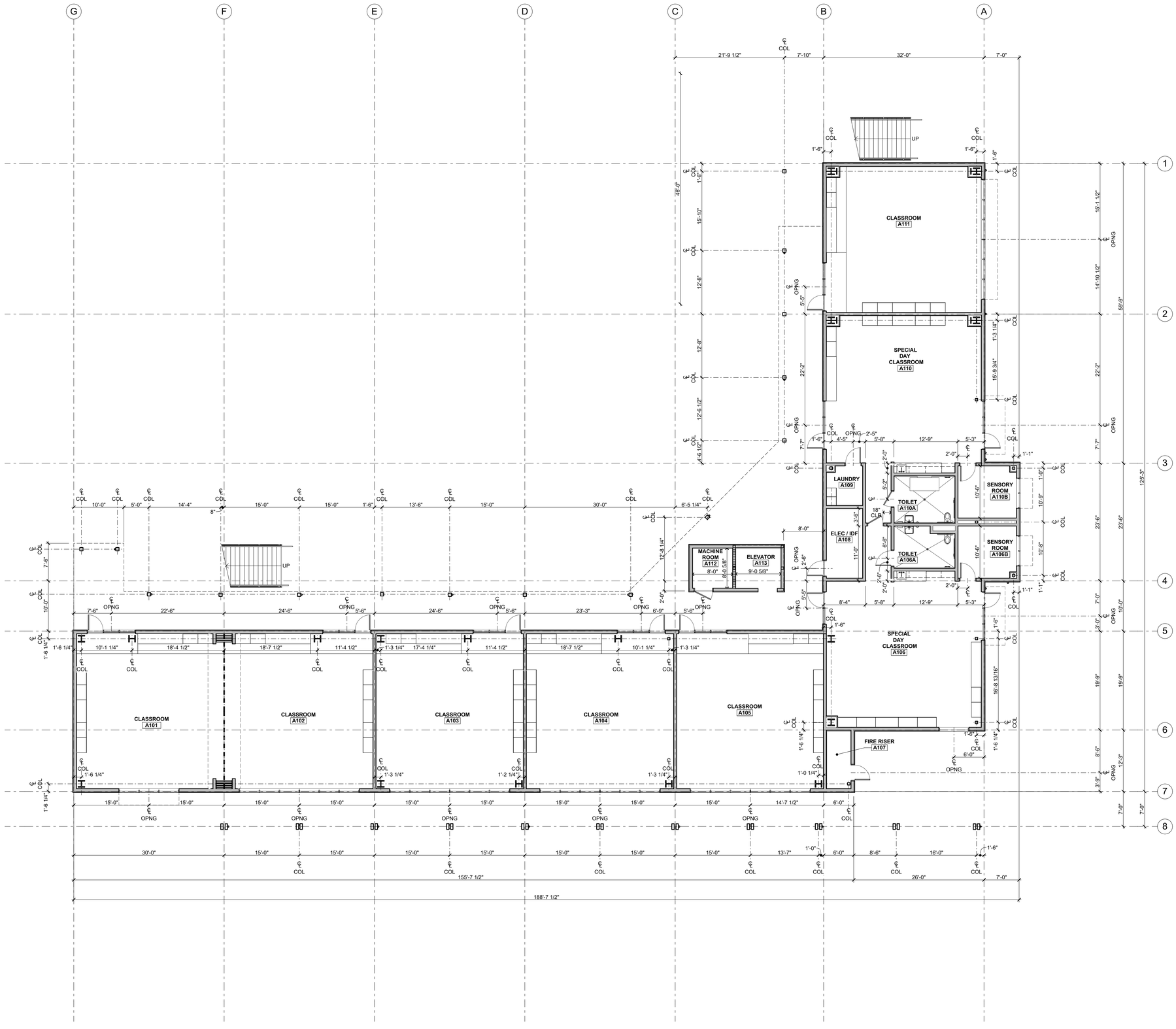

FIRST FLOOR DIMENSION PLAN 1

1/8" = 1'-0"

WALL TYPE LEGEND

WD FRAMING: 6" STUDS, TYP U.O.N.
MTL FRAMING: 6" STUDS, TYP U.O.N.

- EXT WALL MTL FRMG W/ CEM PL O/ INSUL BD, SEE 4 / A-9.1
- INT WALL MTL FRMG W/ GYP BD ON EA SIDE, SEE 22 / A-9.1
- INT FURRING WALL MTL FRMG 22 / A-9.1 SIM 21 / A-9.1
- METAL FRAMING - 1 HOUR RATED
- EXT WALL WD FRMG W/ CEM PL O/ INSUL BD, SEE 4 / A-9.2
- INT WALL WD FRMG W/ GYP BD ON EA SIDE, SEE 24 / A-9.2
- INT FURRING WALL WD FRMG 24 / A-9.2 SIM 23 / A-9.2
- WD FRAMING - 1 HOUR RATED
- 6" METAL STUD SIZE, 6" U.O.N.
- 45 ACOUSTIC RATING (STC), SEE 28 / A-9.3
- B101A DOOR A IN ROOM NUMBER 101 IN BUILDING B ACCESSIBLE CLEARANCES SHOWN DASHED SEE 2 / A-8.1
- W03 WINDOW NUMBER 03

KEY PLAN

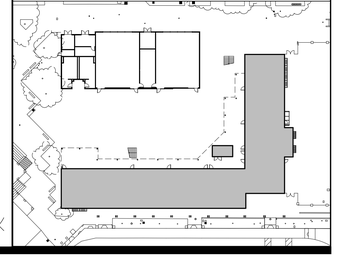

IDENTIFICATION STAMP
DIV. OF THE STATE ARCHITECT
APP: 01-119994 INC:
REVIEWED FOR
SS ☑ FLS ☑ ACS ☑
DATE: 08/16/2022

QUATTROCCHI KWOK ARCHITECTS
Main:
636 Fifth Street, Santa Rosa, CA 95404
East Bay:
55 Harrison Street, Suite 525,
Oakland, CA 94607
(707) 576-0829

LICENSED ARCHITECT
JIM THEISS
LICENSE # C22643
EXP JUNE 30, 2023
STATE OF CALIFORNIA

SIGNED: JUNE 24, 2022

LIBERTY HIGH SCHOOL

NEW CLASSROOM BUILDINGS

850 2ND STREET
BRENTWOOD, CA
94513

LIBERTY UNION HIGH SCHOOL DISTRICT

DSA APP NO.	01-119994
ARCH PROJECT NO:	1925.00
DRAWN BY:	JDS
DRAWING SCALE:	1/8" = 1'-0"
PTN: 61721-83	FILE NO: 7-H4

CONSTRUCTION DOCUMENTS

JUNE 24, 2022

SHEET TITLE

BLDG A - FIRST FLOOR DIMENSION PLAN

SHEET NUMBER

A-A2.2

BIMcloud: archiserver - BIMcloud Basic for ARCHICAD 22/1925.00 Liberty HS Classroom, BLDG A, AC22.7/27/2022-5:28 PM

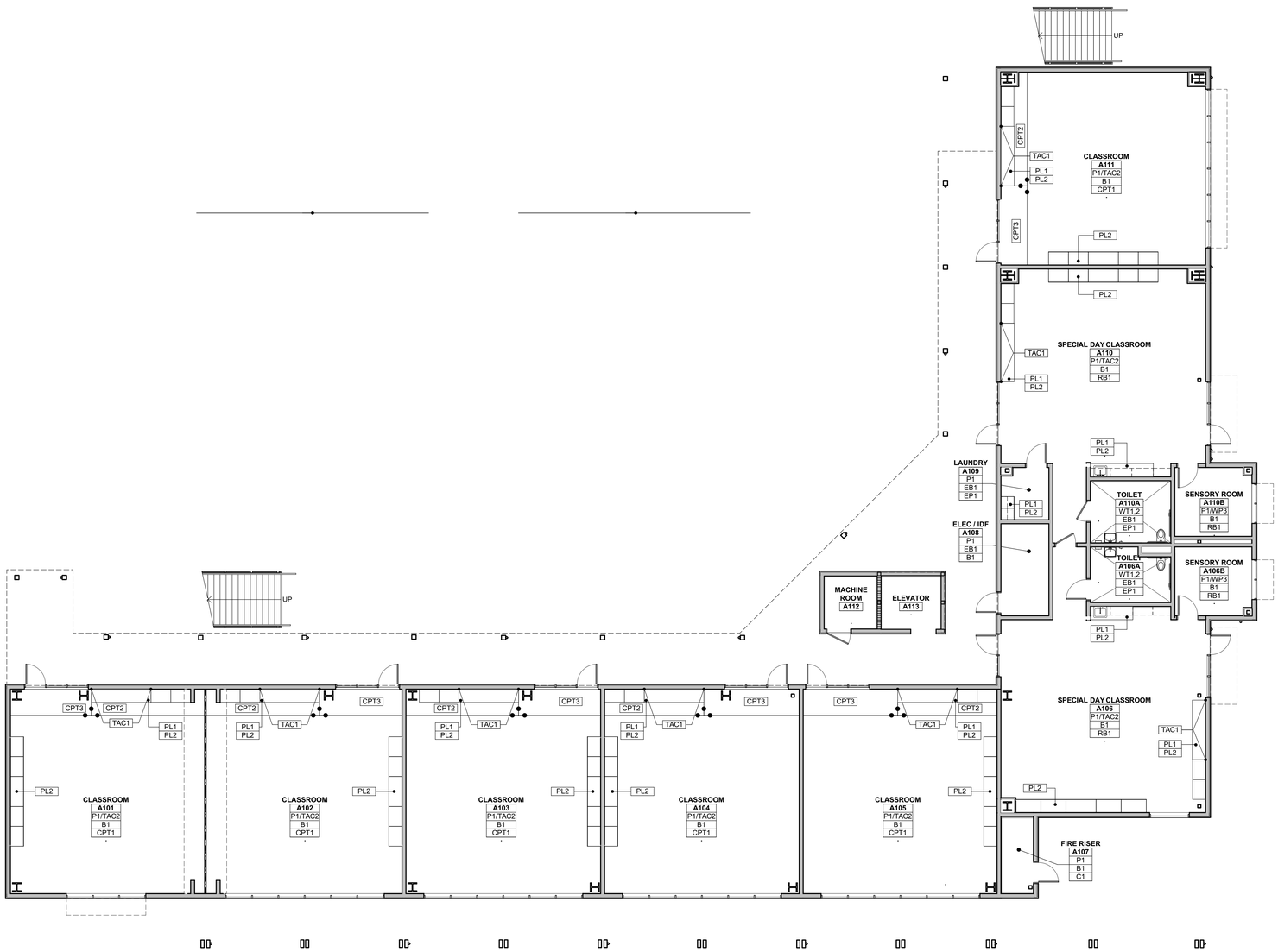

FIRST FLOOR FINISH PLAN (1)

1/8" = 1'-0"

NORTH

FINISH PLAN GENERAL NOTES

1. SEE FINISH PLAN SHEETS (A-A2.3), (A-A2.6), (A-B2.3), INTERIOR ELEVATION SHEETS (A-A7.1),(A-A7.2),(A-A7.3),(A-A7.4),(A-B7.1) DETAILS AND PROJECT SPECIFICATIONS FOR THE EXTENT OF FINISH DOCUMENTATION AND PRODUCT AND MATERIAL INFORMATION.
2. SEE REFLECTED CEILING PLAN SHEETS (A-A3.1),(A-A3.2),(A-B3.1), FOR SPECIFIC LOCATIONS & CONFIGURATIONS OF GYP. BD. SOFFITS, SUSPENDED CEILING SYSTEMS AND OTHER CEILING ELEMENTS. ALL GYP. SOFFITS TO BE PAINTED P1, U.O.N.
3. FLOOR FINISH INSTALLATION SHALL BE SMOOTH. CHANGES IN LEVEL OF ¼ INCH HIGH MAXIMUM SHALL BE PERMITTED TO BE VERTICAL. CHANGES IN LEVEL OF 1/4 INCH VERTICAL PLUS 1/4 INCH BEVELED SHALL BE IN ACCORDANCE WITH CBC 11B 303. EXPOSED EDGES OF THE FLOORING SHALL BE FASTENED TO THE FLOOR SURFACE AND HAVE TRIM IN ACCORDANCE WITH ACCESSORIES AND INSTALLATIONS OF PRODUCT SPECIFICATION SECTION.
4. NEW FLOORING TO EXTEND UNDER ALL BUILT-IN CASEWORK.
5. CONTRACTOR TO VERIFY W/ ARCHITECT ALL MATERIAL / COLOR TERMINATION POINTS ON ALL HORIZONTAL & VERTICAL SURFACES PRIOR TO START OF WORK.
6. INTERIOR PAINTED WALLS ARE TO BE P1 TYP, U.O.N.. SEE FINISH SCHEDULE AND PROJECT SPECIFICATION FOR PAINTING SCHEDULE AND SHEEN DESIGNATION, U.O.N..
7. ALL INTERIOR GRILLES AND REGISTERS TO MATCH ADJACENT WALL COLOR, U.O.N..
8. ALL PAINTED HOLLOW METAL DOOR FRAMES TO BE PAINTED ON ALL SIDES, TYP U.O.N.. SEE DOOR SCHEDULE ON SHEET (A-8.1) FOR FINISH TYPES.
9. ALL PAINTED METAL WINDOW FRAMES TO BE PAINTED ON ALL SIDES, TYP U.O.N.. SEE WINDOW SCHEDULE ON SHEET (A-8.2) FINISH TYPES.
10. FOR FACTORY FINISH WINDOW FRAMES SEE WINDOW SCHEDULE ON SHEET (A-8.2) FINISH TYPES.

FINISH PLAN LEGEND

SEE SHEET A-8.3 FOR FINISH INFORMATION

ROOM NAME	
ROOM #	
P1	WALL FINISH CODE
B1	BASE FINISH CODE
CPT1	FLOOR FINISH CODE
CPT2	SECONDARY FLOOR FINISH TAG
	FLOOR MATERIAL TRANSITION
	GRAIN DIRECTION
P2	WALL FINISH TAG
	FINISH CODE
	EXTENT OF MATERIAL
PL1 / PL2	PL1 REFERS TO COUNTERTOP FINISH PL2 REFERS TO CABINET FACE FINISH

KEY PLAN

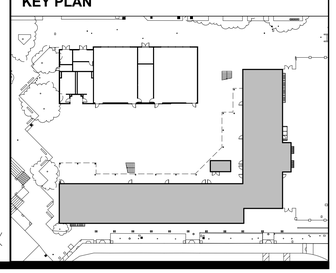

IDENTIFICATION STAMP
DIV. OF THE STATE ARCHITECT
APP: 01-119994 INC:
REVIEWED FOR
SS ☑ FLS ☑ ACS ☑
DATE: 08/16/2022

QUATTROCCHI KWOK ARCHITECTS

Main:
636 Fifth Street, Santa Rosa, CA 95404
East Bay:
55 Harrison Street, Suite 525,
Oakland, CA. 94607
(707) 576-0829

LICENSED ARCHITECT
JIM THEISS
LICENSE # C22643
EXP JUNE 30, 2023
STATE OF CALIFORNIA

SIGNED: JUNE 24, 2022

LIBERTY HIGH SCHOOL

NEW CLASSROOM BUILDINGS

850 2ND STREET
BRENTWOOD, CA
94513

LIBERTY UNION HIGH SCHOOL DISTRICT

DSA APP NO. 01-119994

ARCH PROJECT NO:	1925.00
DRAWN BY:	HD
DRAWING SCALE:	1/8" = 1'-0"
PTN: 61721-83	FILE NO: 7-H4

CONSTRUCTION DOCUMENTS

JUNE 24, 2022

SHEET TITLE

BLDG A - FIRST FLOOR FINISH PLAN

SHEET NUMBER

A-A2.3

BIMcloud: archiserver - BIMcloud Basic for ARCHICAD 22/1925.00 Liberty HS Classroom_BLDG A_AC22.7/27/2022 5:28 PM

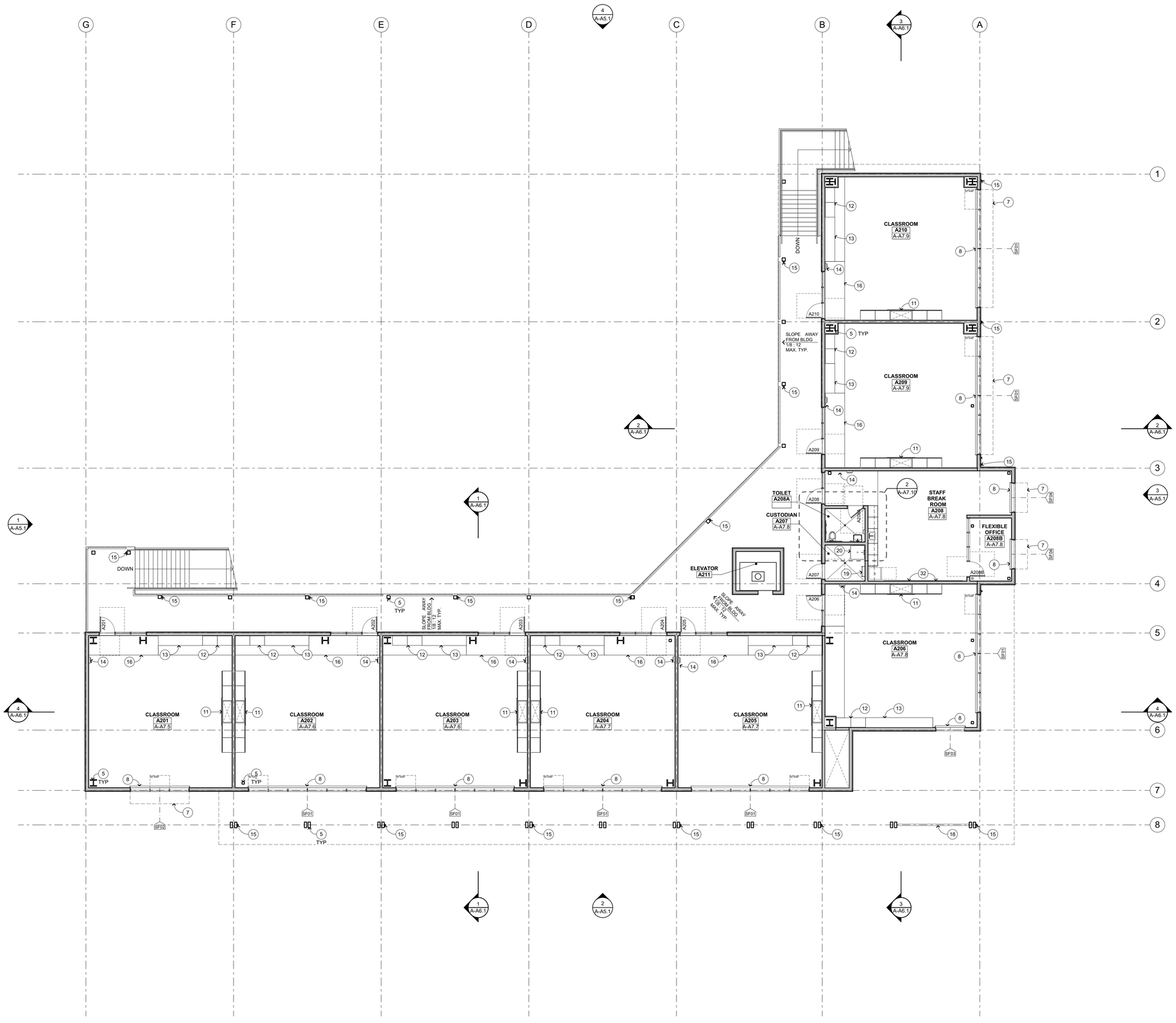

SECOND FLOOR PLAN

1/8" = 1'-0"

FLOOR PLAN KEYNOTES

NOT ALL KEYNOTES MAY APPLY TO THIS SHEET

1. FIRE SPRINKLER RISER, S.P.D.
2. MECHANICAL ITEM, S.M.D.
3. PLUMBING ITEM / FIXTURE, S.P.D.
4. ELECTRICAL ITEM, S.E.D.
5. STRUCTURAL ITEM, S.S.D.
6. INTEGRATED RAIN CANOPY ABOVE
7. SHADE STRUCTURE ABOVE
8. MANUAL WINDOW SHADES, SEE 13/A-9.4
9. FOLDING PANEL PARTITION
10. ACCESSIBLE BASE CABINET W/ SINK
11. CUSTOM CASEWORK W/ MARKERBOARD, SEE 2/A-10.5
12. CASEWORK, SEE 3/A-10.4
13. BASE CABINETS W/ COUNTERTOP
14. RECESSED FIRE EXTINGUISHER CABINET, SEE 13/A-10.3 SIM
15. RAINWATER LEADER, SEE 9/A-9.8
16. INTEGRATED WALK-OFF CARPET, SEE FINISH PLANS
17. SECOND LEVEL DECK OVERHEAD
18. PERFORATED METAL SIGANGE, SEE 22/A-9.8
19. ROOF ACCESS LADDER, SEE 24/A-9.7 MTL, 25/A-9.7 WD
20. MOP SINK
21. TEACHER'S DEMONSTRATION TABLE, SEE 18/A-10.4
22. EPOXY RESIN, SCIENCE LAB STATION W/ SINK AND GAS BURNER
23. ACCESSIBLE HEIGHT SCIENCE LAB STATION
24. EMERGENCY EYEWASH STATION, S.P.D.
25. FUME HOOD, S.M.D.
26. ROOF LINE ABOVE
27. FREESTANDING SS SINK, S.P.D.
28. ACCESSIBLE HI-LO DRINKING FOUNTAIN W/ BOTTLE FILLER, SEE 2/A-10.3, 7/A-10.3
29. WASHER/DRYER ALL-IN-ONE COMBO, OFCI. PER CBC 11B-611
30. REFRIGERATOR W/ BOTTOM FREEZER, OFCI. PER CBC 11B-804.6.6
31. ELECTRIC OVEN RANGE WITH FRONT CONTROLS , OFCI. PER CBC 11B-804.6.4
32. 4x8' WALL MOUNTED MARKBOARD, SEE 34/A-10.3

WALL TYPE LEGEND

WD FRAMING: 6" STUDS, TYP U.O.N.
MTL FRAMING: 6" STUDS, TYP U.O.N.

- EXT WALL MTL FRMG W/ CEM PL O/ INSUL BD, SEE 4/A-9.1
- INT WALL MTL FRMG W/ GYP BD ON EA SIDE, SEE 22/A-9.1
- INT FURRING WALL MTL FRMG 22/A-9.1 SIM
- METAL FRAMING - 1 HOUR RATED 21/A-9.1
- EXT WALL WD FRMG W/ CEM PL O/ INSUL BD, SEE 4/A-9.2
- INT WALL WD FRMG W/ GYP BD ON EA SIDE, SEE 24/A-9.2
- INT FURRING WALL WD FRMG 24/A-9.2 SIM
- WD FRAMING - 1 HOUR RATED 23/A-9.2
- 6" METAL STUD SIZE, 6" U.O.N.
- 45 ACOUSTIC RATING (STC), SEE 28/A-9.3
- B101A DOOR A IN ROOM NUMBER 101 IN BUILDING B ACCESSIBLE CLEARANCES SHOWN DASHED SEE 2/A-8.1
- W03 WINDOW NUMBER 03

KEY PLAN

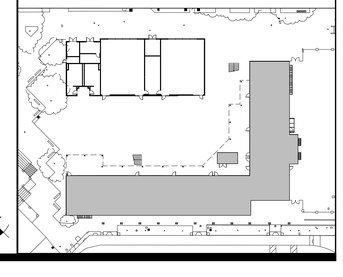

IDENTIFICATION STAMP
DIV. OF THE STATE ARCHITECT
APP: 01-119994 INC:
REVIEWED FOR
SS ☑ FLS ☑ ACS ☑
DATE: 08/16/2022

QUATTROCCHI KWOK ARCHITECTS
Main:
636 Fifth Street, Santa Rosa, CA 95404
East Bay:
55 Harrison Street, Suite 525,
Oakland, CA 94607
(707) 576-0829

LICENSED ARCHITECT
JIM THEISS
LICENSE # C22643
EXP JUNE 30, 2023
STATE OF CALIFORNIA

SIGNED: JUNE 24, 2022

LIBERTY HIGH SCHOOL

NEW CLASSROOM BUILDINGS

850 2ND STREET
BRENTWOOD, CA
94513

LIBERTY UNION HIGH SCHOOL DISTRICT

DSA APP NO. 01-119994

ARCH PROJECT NO:	1925.00
DRAWN BY:	JDS
DRAWING SCALE:	1/8" = 1'-0"
PTN. 61721-83	FILE NO: 7-H4

CONSTRUCTION DOCUMENTS

JUNE 24, 2022

SHEET TITLE

BLDG A - SECOND FLOOR PLAN

SHEET NUMBER

A-A2.4

BIMcloud: archiserver - BIMcloud Basic for ARCHICAD 22/1925.00 Liberty HS Classroom_BLDG A_AC22.7/27/2022.5:28 PM

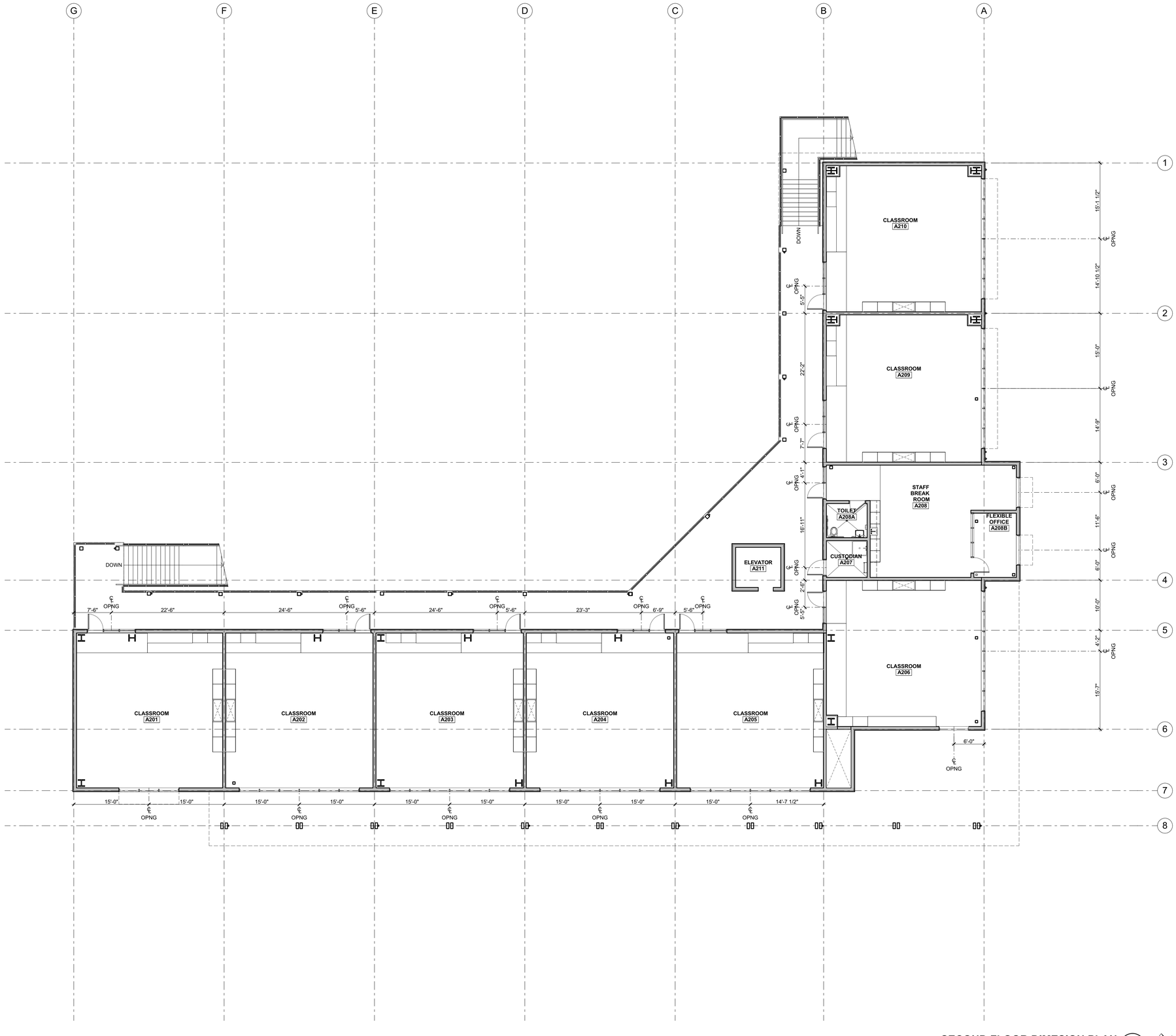

SECOND FLOOR DIMESION PLAN 1

1/8" = 1'-0"

NORTH

FLOOR PLAN KEYNOTES

NOT ALL KEYNOTES MAY APPLY TO THIS SHEET

1. FIRE SPRINKLER RISER, S.P.D.
2. MECHANICAL ITEM, S.M.D.
3. PLUMBING ITEM / FIXTURE, S.P.D.
4. ELECTRICAL ITEM, S.E.D.
5. STRUCTURAL ITEM, S.S.D.
6. INTEGRATED RAIN CANOPY ABOVE
7. SHADE STRUCTURE ABOVE
8. MANUAL WINDOW SHADES, SEE 13/A-9.4
9. FOLDING PANEL PARTITION
10. ACCESSIBLE BASE CABINET W/ SINK
11. CUSTOM CASEWORK W/ MARKERBOARD, SEE 2/A-10.5
12. CASEWORK, SEE 3/A-10.4
13. BASE CABINETS W/ COUNTERTOP
14. RECESSED FIRE EXTINGUISHER CABINET, SEE 13/A-10.3 SIM
15. RAINWATER LEADER, SEE 9/A-9.8
16. INTEGRATED WALK-OFF CARPET, SEE FINISH PLANS
17. SECOND LEVEL DECK OVERHEAD
18. PERFORATED METAL SIGANGE, SEE 22/A-9.8
19. ROOF ACCESS LADDER, SEE 24/A-9.7 MTL 25/A-9.7 WD
20. MOP SINK
21. TEACHER'S DEMONSTRATION TABLE, SEE 18/A-10.4
22. EPOXY RESIN, SCIENCE LAB STATION W/ SINK AND GAS BURNER
23. ACCESSIBLE HEIGHT SCIENCE LAB STATION
24. EMERGENCY EYEWASH STATION, S.P.D.
25. FUME HOOD, S.M.D.
26. ROOF LINE ABOVE
27. FREESTANDING SS SINK, S.P.D.
28. ACCESSIBLE HI-LO DRINKING FOUNTAIN W/ BOTTLE FILLER, SEE 2/A-10.3 7/A-10.3
29. WASHER/DRYER ALL-IN-ONE COMBO, OFCI. PER CBC 11B-611
30. REFRIGERATOR W/ BOTTOM FREEZER, OFCI. PER CBC 11B-804.6.6
31. ELECTRIC OVEN RANGE WITH FRONT CONTROLS , OFCI. PER CBC 11B-804.6.4
32. 4x8' WALL MOUNTED MARKBOARD, SEE 34/A-10.3

WALL TYPE LEGEND

WD FRAMING: 6" STUDS, TYP U.O.N.
MTL FRAMING: 6" STUDS, TYP U.O.N.

- EXT WALL MTL FRMG W/ CEM PL O/ INSUL BD, SEE 4/A-9.1
- INT WALL MTL FRMG W/ GYP BD ON EA SIDE, SEE 22/A-9.1
- INT FURRING WALL MTL FRMG 22/A-9.1 SIM
- METAL FRAMING - 1 HOUR RATED 21/A-9.1
- EXT WALL WD FRMG W/ CEM PL O/ INSUL BD, SEE 4/A-9.2
- INT WALL WD FRMG W/ GYP BD ON EA SIDE, SEE 24/A-9.2
- INT FURRING WALL WD FRMG 24/A-9.2 SIM
- WD FRAMING - 1 HOUR RATED 23/A-9.2
- 6" METAL STUD SIZE, 6" U.O.N.
- 45 ACOUSTIC RATING (STC), SEE 28/A-9.3
- B101A DOOR A IN ROOM NUMBER 101 IN BUILDING B ACCESSIBLE CLEARANCES SHOWN DASHED SEE 2/A-8.1
- W03 WINDOW NUMBER 03

KEY PLAN

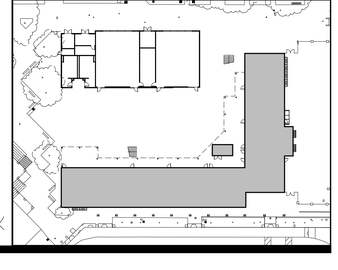

IDENTIFICATION STAMP
DIV. OF THE STATE ARCHITECT
APP: 01-119994 INC:
REVIEWED FOR
SS ☑ FLS ☑ ACS ☑
DATE: 08/16/2022

QUATTROCCHI KWOK ARCHITECTS
Main:
636 Fifth Street, Santa Rosa, CA 95404
East Bay:
55 Harrison Street, Suite 525,
Oakland, CA 94607
(707) 576-0829

LICENSED ARCHITECT
JIM THEISS
LICENSE # C22643
EXP JUNE 30, 2023
STATE OF CALIFORNIA

SIGNED: JUNE 24, 2022

LIBERTY HIGH SCHOOL

NEW CLASSROOM BUILDINGS

850 2ND STREET
BRENTWOOD, CA
94513

LIBERTY UNION HIGH SCHOOL DISTRICT

DSA APP NO.	01-119994
ARCH PROJECT NO:	1925.00
DRAWN BY:	JDS
DRAWING SCALE:	1/8" = 1'-0"
PTN: 61721-83	FILE NO: Y-H4

CONSTRUCTION DOCUMENTS

JUNE 24, 2022

SHEET TITLE

BLDG A - SECOND FLOOR DIMENSION PLAN

SHEET NUMBER

A-A2.5

BIMcloud: archiserver - BIMcloud Basic for ARCHICAD 22/1925.00 Liberty HS Classroom, BLDG A, AC22 7/27/2022 5:28 PM

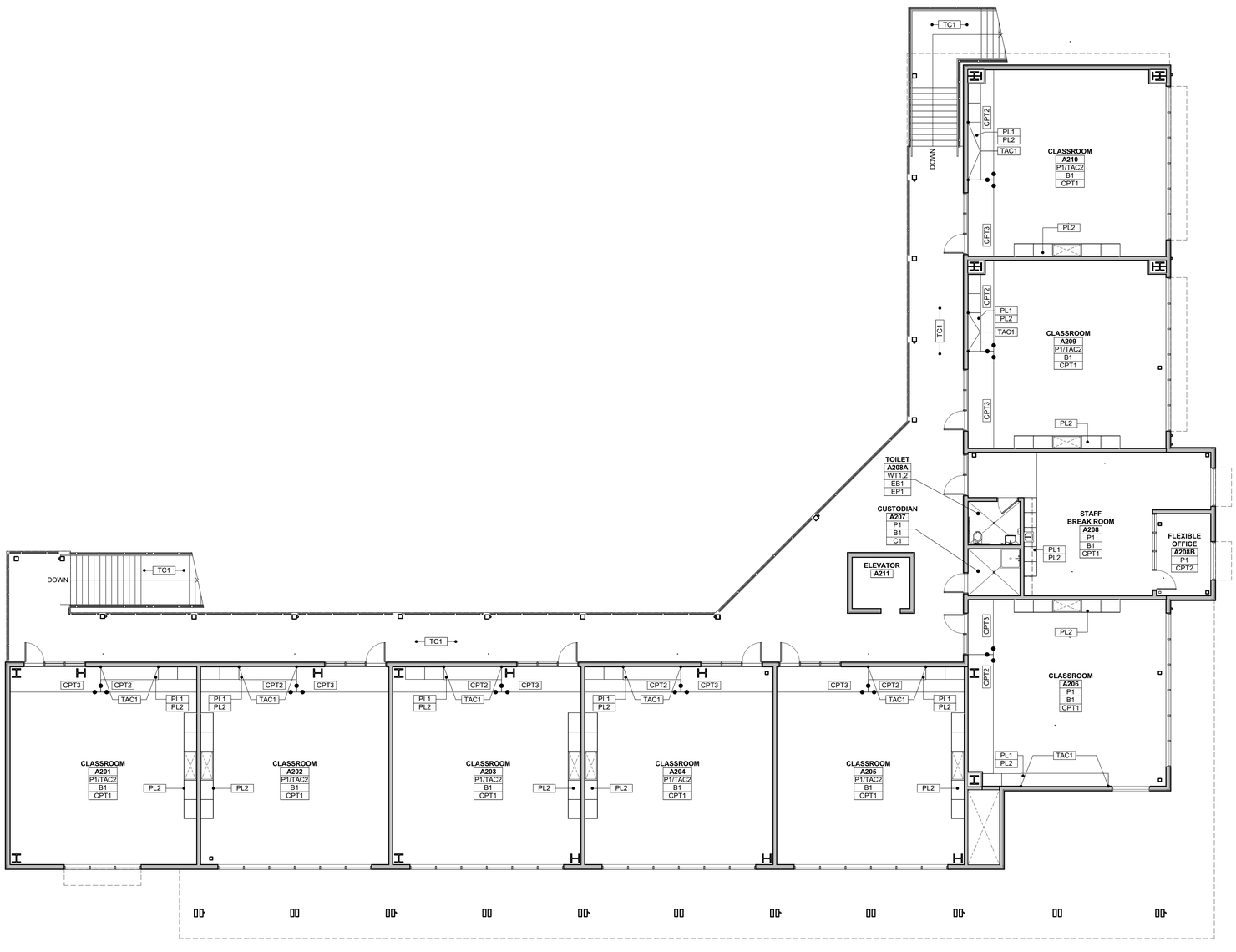

SECOND FLOOR FINISH PLAN

1 — 1/8" = 1'-0"

NORTH

FINISH PLAN GENERAL NOTES

1. SEE FINISH PLAN SHEETS (A-A2.3), (A-A2.6), (A-B2.3), INTERIOR ELEVATION SHEETS (A-A7.1),(A-A7.2),(A-A7.3),(A-A7.4),(A-B7.1) DETAILS AND PROJECT SPECIFICATIONS FOR THE EXTENT OF FINISH DOCUMENTATION AND PRODUCT AND MATERIAL INFORMATION.
2. SEE REFLECTED CEILING PLAN SHEETS (A-A3.1),(A-A3.2),(A-B3.1), FOR SPECIFIC LOCATIONS & CONFIGURATIONS OF GYP. BD. SOFFITS, SUSPENDED CEILING SYSTEMS AND OTHER CEILING ELEMENTS. ALL GYP. SOFFITS TO BE PAINTED P1, U.O.N.
3. FLOOR FINISH INSTALLATION SHALL BE SMOOTH. CHANGES IN LEVEL OF ¼ INCH HIGH MAXIMUM SHALL BE PERMITTED TO BE VERTICAL. CHANGES IN LEVEL OF 1/4 INCH VERTICAL PLUS 1/4 INCH BEVELED SHALL BE IN ACCORDANCE WITH CBC 11B 303. EXPOSED EDGES OF THE FLOORING SHALL BE FASTENED TO THE FLOOR SURFACE AND HAVE TRIM IN ACCORDANCE WITH ACCESSORIES AND INSTALLATIONS OF PRODUCT SPECIFICATION SECTION.
4. NEW FLOORING TO EXTEND UNDER ALL BUILT-IN CASEWORK.
5. CONTRACTOR TO VERIFY W/ ARCHITECT ALL MATERIAL / COLOR TERMINATION POINTS ON ALL HORIZONTAL & VERTICAL SURFACES PRIOR TO START OF WORK.
6. INTERIOR PAINTED WALLS ARE TO BE P1 TYP, U.O.N.. SEE FINISH SCHEDULE AND PROJECT SPECIFICATION FOR PAINTING SCHEDULE AND SHEEN DESIGNATION, U.O.N..
7. ALL INTERIOR GRILLES AND REGISTERS TO MATCH ADJACENT WALL COLOR, U.O.N..
8. ALL PAINTED HOLLOW METAL DOOR FRAMES TO BE PAINTED ON ALL SIDES, TYP U.O.N.. SEE DOOR SCHEDULE ON SHEET (A-8.1) FOR FINISH TYPES.
9. ALL PAINTED METAL WINDOW FRAMES TO BE PAINTED ON ALL SIDES, TYP U.O.N.. SEE WINDOW SCHEDULE ON SHEET (A-8.2) FINISH TYPES.
10. FOR FACTORY FINISH WINDOW FRAMES SEE WINDOW SCHEDULE ON SHEET (A-8.2) FINISH TYPES.

FINISH PLAN LEGEND

SEE SHEET A-8.3 FOR FINISH INFORMATION

ROOM NAME
ROOM #
P1 — WALL FINISH CODE
B1 — BASE FINISH CODE
CPT1 — FLOOR FINISH CODE

CPT2 — SECONDARY FLOOR FINISH TAG

FLOOR MATERIAL TRANSITION

GRAIN DIRECTION

P2 — WALL FINISH TAG
FINISH CODE
EXTENT OF MATERIAL

PL1 / PL2 — PL1 REFERS TO COUNTERTOP FINISH
PL2 REFERS TO CABINET FACE FINISH

KEY PLAN

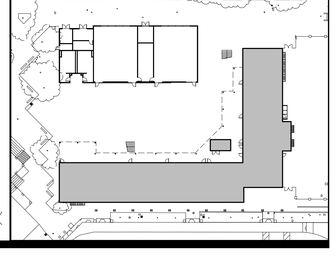

IDENTIFICATION STAMP
DIV. OF THE STATE ARCHITECT
APP: 01-119994 INC:
REVIEWED FOR
SS ☑ FLS ☑ ACS ☑
DATE: 08/16/2022

QUATTROCCHI KWOK ARCHITECTS
Main:
636 Fifth Street, Santa Rosa, CA 95404
East Bay:
55 Harrison Street, Suite 525,
Oakland, CA 94607
(707) 576-0829

LICENSED ARCHITECT
JIM THEISS
LICENSE # C22643
EXP JUNE 30, 2023
STATE OF CALIFORNIA

SIGNED: JUNE 24, 2022

LIBERTY HIGH SCHOOL

NEW CLASSROOM BUILDINGS

850 2ND STREET
BRENTWOOD, CA
94513

LIBERTY UNION
HIGH SCHOOL
DISTRICT

DSA APP NO. 01-119994

ARCH PROJECT NO:	1925.00
DRAWN BY:	*HD*
DRAWING SCALE:	1/8" = 1'-0"
PTN: 61721-83	FILE NO: 7-H4

CONSTRUCTION DOCUMENTS

JUNE 24, 2022

SHEET TITLE

BLDG A - SECOND FLOOR FINISH PLAN

SHEET NUMBER

A-A2.6

BIMcloud: archiserver - BIMcloud Basic for ARCHICAD 22/1925.00 Liberty HS Classroom_BLDG A_AC22.7/27/2022:5:28 PM

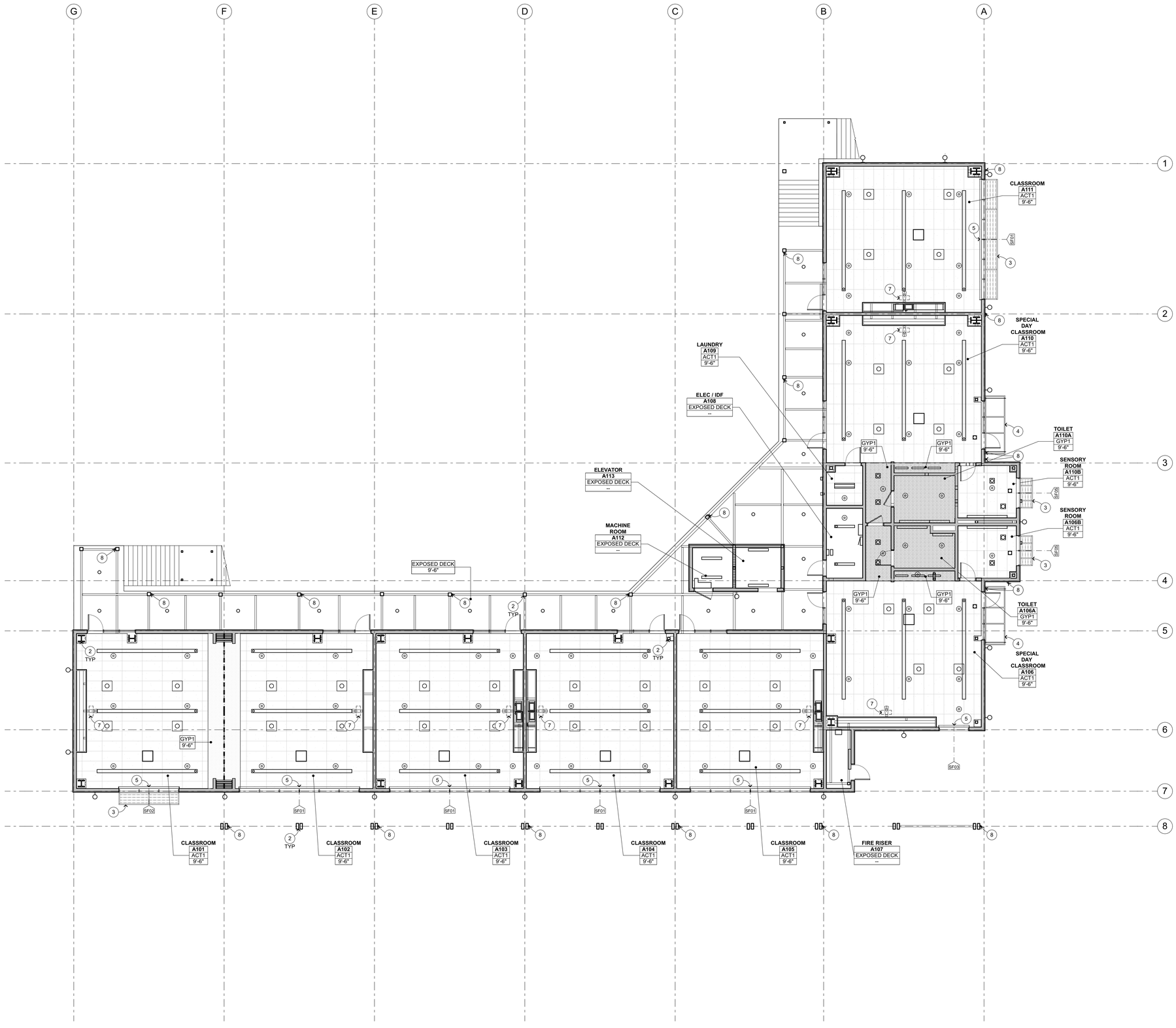

FIRST FLOOR REFLECTED CEILING PLAN 1

1/8" = 1'-0"

REFLECTED CEILING PLAN KEYNOTES

NOT ALL KEYNOTES MAY APPLY TO THIS SHEET

1. ROOF ACCESS LADDER, SEE 24/A-9.7 25/A-9.7 MTL WD
2. EXPOSED STRUCTURE, S.S.D.
3. SHADE STRUCTURE, SEE 22/A-9.4
4. INTEGRATED RAIN CANOPY
5. MANUAL WINDOW SHADES, SEE 27/A-10.3
6. POWERED WINDOW SHADES, SEE 28/A-10.3
7. WALL MOUNTED SHORT THROW PROJECTOR, OFOI CONTR SHALL PROVIDE BACKING PER 21/A-10.3 25/A-10.4
8. RAIN WATER LEADER, SEE 9/A-9.8

REFLECTED CEILING PLAN GENERAL NOTES

1. NOTES & SYMBOLS ARE TO APPLY TO ALL AREAS OF SIMILAR GRAPHIC REPRESENTATION. SUCH INDICATIONS MAY BE LIMITED TO PROMOTE CLARITY OR AVOID REDUNDACY. NO LIMITATION OF APPLICATION SHALL BE CONSTRUED WITHOUT SPECIFIC NOTATION.
2. PENDANT LIGHT FIXTURE LOCATION DIMENSIONS ARE NOMINAL. VERIFY IN FIELD TO MAINTAIN 45° SWING CLEARANCES TO FIXED ELEMENTS.
3. S.E.D. FOR HORNS, SPEAKERS, PULL STATIONS, LIGHT FIXTURES AND OTHER FEATURES NOT OTHERWISE SHOWN.
4. S.E.D. FOR EXIT SIGNS & EMERGENCY LIGHTING CONDITIONS.
5. S.M.D. FOR PIPING, REGISTERS & VENTS NOT OTHERWISE SHOWN. MECHANICAL DUCT LOCATION DIMENSIONS ARE NOMINAL. VERIFY IN FIELD TO MAINTAIN CLEARANCES TO FIXED ELEMENTS.
6. CBC TABLE 601- ROOFS AND THEIR MEMBERS OTHER THAN THE STRUCTURAL FRAME MAY BE OF UNPROTECTED NON-COMBUSTIBLE MATERIALS WHEN EVERY PART OF ROOF FRAMING INCLUDING THE STRUCTURAL FRAME IS 20 FEET OR MORE ABOVE THE FLOOR IMMEDIATELY BELOW

REFLECTED CEILING PLAN LEGEND

ROOM NUMBER / XX1 / X'-X"

XX1 REFERS TO CEILING FINISH CODE SEE BELOW. X'-X" REFERS TO FINISHED CEILING HEIGHT AFF. WHERE CEILING HEIGHT IS INDICATED AS "OPEN" OR " - ", ROOM IS OPEN TO STRUCTURE ABOVE. FOR CEILING CONFIGURATION & HEIGHT WHERE CEILING HEIGHT IS INDICATED AS CURVED, SLOPING, OR VARIES, REFER TO SECTION DRAWINGS.

DOORS SHOWN DASHED INDICATE DOOR BELOW. FOR DEMO, (E), AND (N) DOOR/FRAME INFORMATION SEE FLOOR PLANS & DOOR SCHEDULE

ELECTRICAL ITEMS, S.E.D.

MECHANICAL ITEMS, S.M.D.

FIRE SPRINKLERS, S.F.P.D.

CEILING FINISH CODES

FOR PAINT FINISHES SEE SEC. 09 9113 (EXTERIOR) & 09 9123 (INTERIOR).

SEE FINISH SCHEDULE ON SHEET A-8.3 FOR FINISH INFORMATION

GYPSUM BOARD

2'X4' SUSPENDED CEILING SYSTEM W/ ACOUSTIC TILE — 3/A-10.2 MTL, 7/A-10.1 WD

EXTERIOR CEMENT PLASTER W/ CONTROL JOINTS AS SHOWN — 4/A-9.1 MTL, 4/A-9.2 WD

ACOUSTIC METAL DECK

EXPOSED CEILING/ROOF STRUCTURE, PAINTED

OPEN AIR CHASE

KEY PLAN

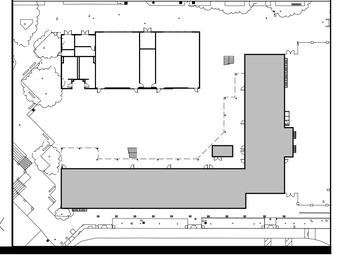

IDENTIFICATION STAMP
DIV. OF THE STATE ARCHITECT
APP: 01-119994 INC:
REVIEWED FOR
SS ☑ FLS ☑ ACS ☑
DATE: 08/16/2022

QUATTROCCHI KWOK ARCHITECTS
Main:
636 Fifth Street, Santa Rosa, CA 95404
East Bay:
55 Harrison Street, Suite 525,
Oakland, CA 94607
(707) 576-0829

LICENSED ARCHITECT
JIM THEISS
LICENSE # C22643
EXP JUNE 30, 2023
STATE OF CALIFORNIA

SIGNED: JUNE 24, 2022

LIBERTY HIGH SCHOOL

NEW CLASSROOM BUILDINGS

850 2ND STREET
BRENTWOOD, CA
94513

LIBERTY UNION HIGH SCHOOL DISTRICT

DSA APP NO. 01-119994

ARCH PROJECT NO:	1925.00
DRAWN BY:	JDS
DRAWING SCALE:	1/8" = 1'-0"
PTN: 61721-83	FILE NO: 7-H4

CONSTRUCTION DOCUMENTS

JUNE 24, 2022

SHEET TITLE

BLDG A - FIRST FLOOR REFLECTED CEILING PLAN

SHEET NUMBER

A-A3.1

BIMcloud: archiserver - BIMcloud Basic for ARCHICAD 22/1925.00 Liberty HS Classroom: BLDG A, AC22.7/27/2022-5:28 PM

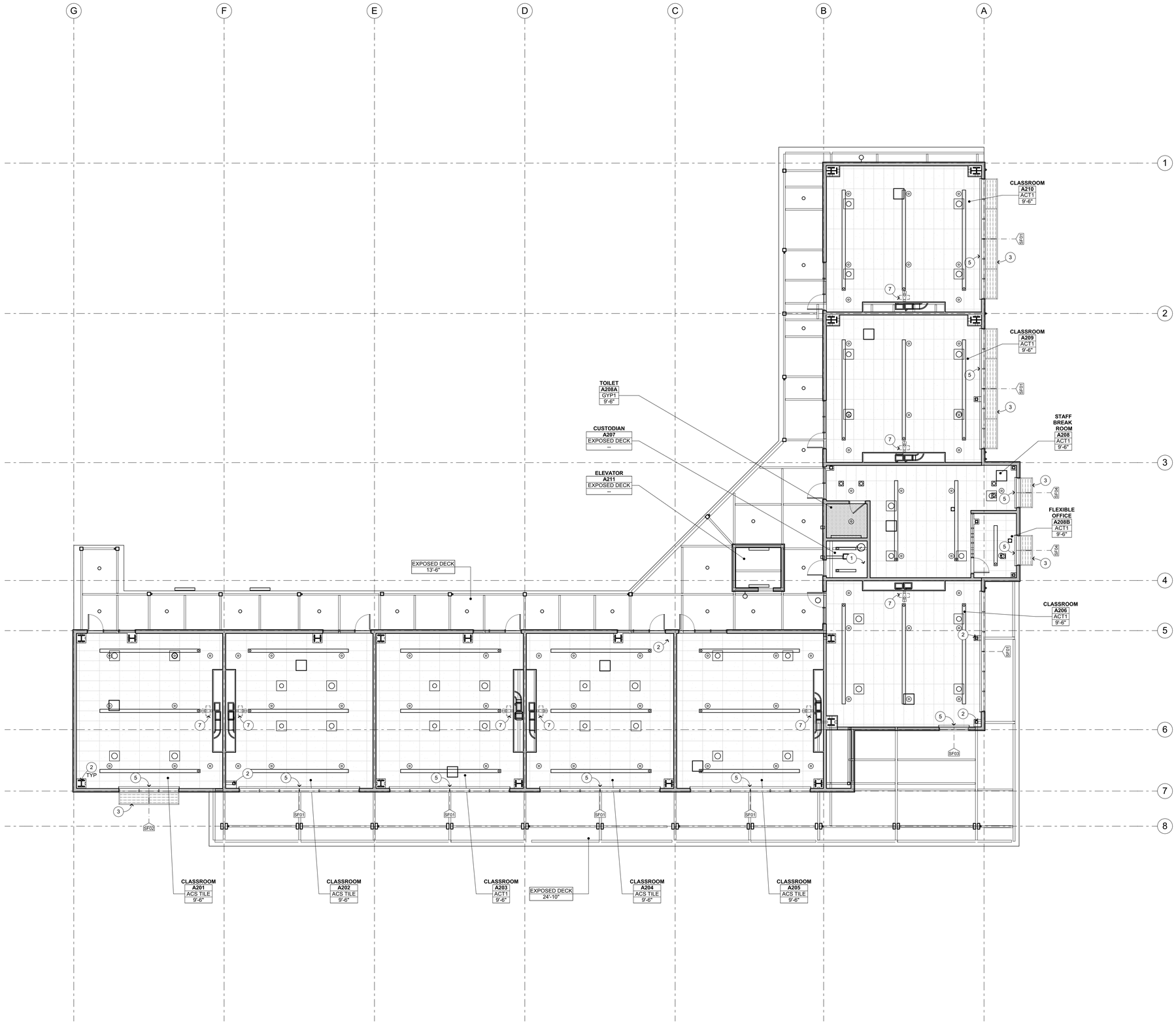

SECOND FLOOR REFLECTED CEILING PLAN

1 — 1/8" = 1'-0"

NORTH

REFLECTED CEILING PLAN KEYNOTES

NOT ALL KEYNOTES MAY APPLY TO THIS SHEET

1. ROOF ACCESS LADDER, SEE 24/A-9.7 (MTL) 25/A-9.7 (WD)
2. EXPOSED STRUCTURE, S.S.D.
3. SHADE STRUCTURE, SEE 22/A-9.4
4. INTEGRATED RAIN CANOPY
5. MANUAL WINDOW SHADES, SEE 27/A-10.3
6. POWERED WINDOW SHADES, SEE 28/A-10.3
7. WALL MOUNTED SHORT THROW PROJECTOR, OFOI CONTR SHALL PROVIDE BACKING PER 21/A-10.3 25/A-10.4
8. RAIN WATER LEADER, SEE 9/A-9.8

REFLECTED CEILING PLAN LEGEND

ROOM NUMBER / XX1 / X'-X"

XX1 REFERS TO CEILING FINISH CODE SEE BELOW. X'-X" REFERS TO FINISHED CEILING HEIGHT AFF. WHERE CEILING HEIGHT IS INDICATED AS "OPEN" OR " - ", ROOM IS OPEN TO STRUCTURE ABOVE. FOR CEILING CONFIGURATION & HEIGHT WHERE CEILING HEIGHT IS INDICATED AS CURVED, SLOPING, OR VARIES, REFER TO SECTION DRAWINGS.

DOORS SHOWN DASHED INDICATE DOOR BELOW. FOR DEMO, (E), AND (N) DOOR/FRAME INFORMATION SEE FLOOR PLANS & DOOR SCHEDULE

ELECTRICAL ITEMS, S.E.D.

MECHANICAL ITEMS, S.M.D.

FIRE SPRINKLERS, S.F.P.D.

CEILING FINISH CODES

FOR PAINT FINISHES SEE SEC. 09 9113 (EXTERIOR) & 09 9123 (INTERIOR).

SEE FINISH SCHEDULE ON SHEET A-8.3 FOR FINISH INFORMATION

- GYPSUM BOARD
- 2'X4' SUSPENDED CEILING SYSTEM W/ ACOUSTIC TILE — 3/A-10.2 (MTL) 7/A-10.1 (WD)
- EXTERIOR CEMENT PLASTER W/ CONTROL JOINTS AS SHOWN — 4/A-9.1 (MTL) 4/A-9.2 (WD)
- ACOUSTIC METAL DECK
- EXPOSED CEILING/ROOF STRUCTURE, PAINTED
- OPEN AIR CHASE

KEY PLAN

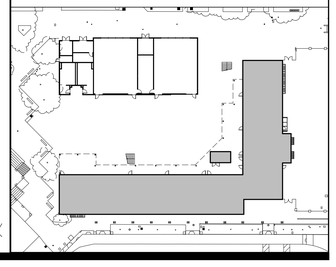

IDENTIFICATION STAMP
DIV. OF THE STATE ARCHITECT
APP: 01-119994 INC:
REVIEWED FOR
SS ☑ FLS ☑ ACS ☑
DATE: 08/16/2022

QUATTROCCHI KWOK ARCHITECTS
Main:
636 Fifth Street, Santa Rosa, CA 95404
East Bay:
55 Harrison Street, Suite 525,
Oakland, CA 94607
(707) 576-0829

LICENSED ARCHITECT
JIM THEISS
LICENSE # C22643
EXP JUNE 30, 2023
STATE OF CALIFORNIA

SIGNED: JUNE 24, 2022

LIBERTY HIGH SCHOOL

NEW CLASSROOM BUILDINGS

850 2ND STREET
BRENTWOOD, CA
94513

LIBERTY UNION HIGH SCHOOL DISTRICT

DSA APP NO. 01-119994

ARCH PROJECT NO:	1925.00
DRAWN BY:	JDS
DRAWING SCALE:	1/8" = 1'-0"
PTN: 61721-83	FILE NO: 7-H4

CONSTRUCTION DOCUMENTS

JUNE 24, 2022

SHEET TITLE

BLDG A - SECOND FLOOR REFLECTED CEILING PLAN

SHEET NUMBER

A-A3.2

BIMcloud: archiserver - BIMcloud Basic for ARCHICAD 22/1925.00 Liberty HS Classroom, BLDG A, AC22:7/27/2022 5:28 PM

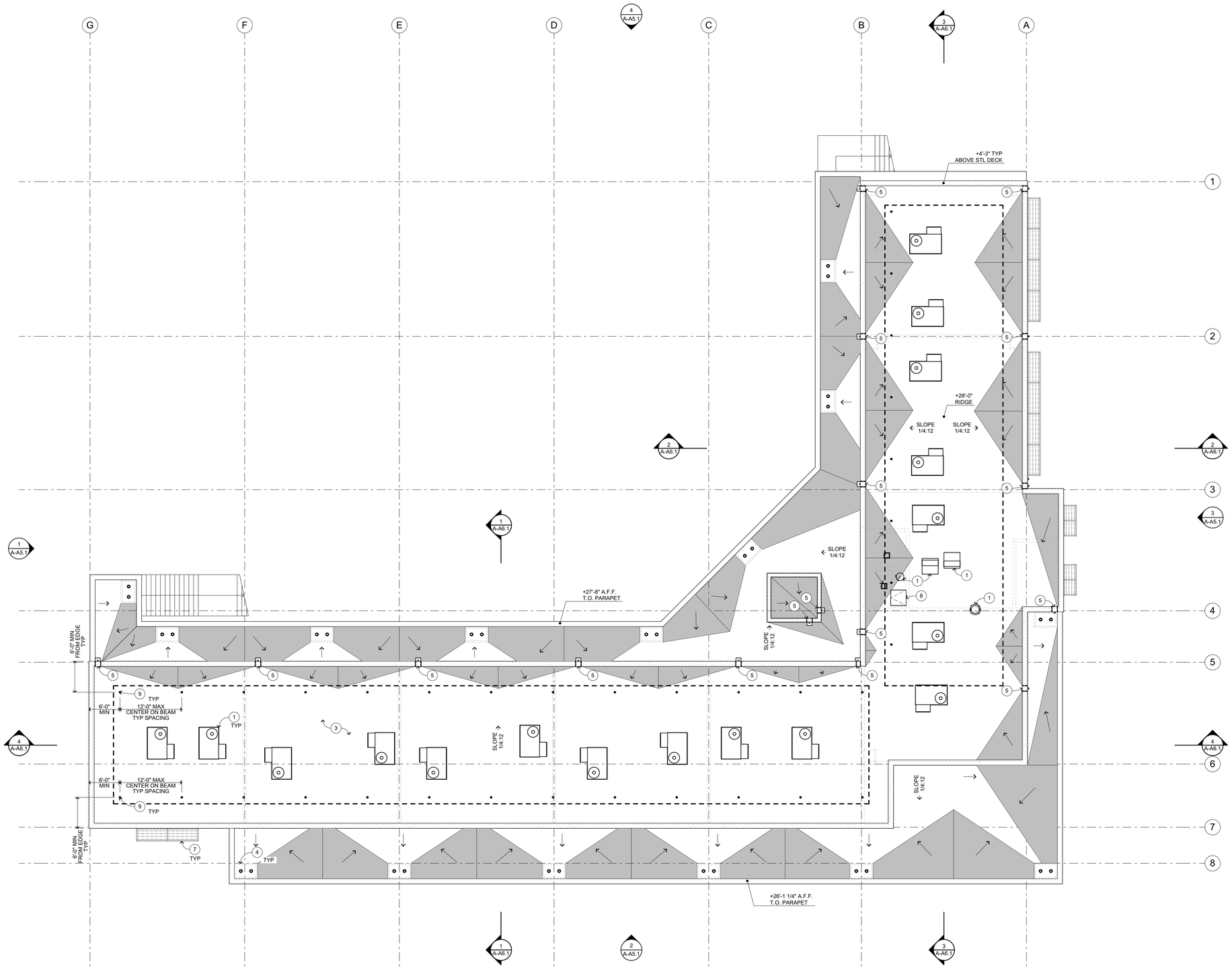

ROOF PLAN

1/8" = 1'-0"

NORTH

ROOF PLAN KEYNOTES

NOT ALL KEYNOTES MAY APPLY TO THIS SHEET

1. MECHANICAL ITEM (S.M.D.), FOR CURB WHERE OCCURS SEE 13/A-9.5
2. STANDING SEAM METAL ROOF, SEE 14/A-9.6 15/A-9.6 26/A-9.6
3. BUILT-UP ROOFING O/PLYWOOD SHEATHING, SEE 1/A-9.6
4. ROOF DRAIN W/ OVERFLOW, SEE 2/A-9.5
5. ROOF SCUPPER W/ CONDUCTOR, SEE MTL 2/A-9.5 WD 11/A-9.5
6. GUTTER, SEE MTL 2/A-9.8 WD 12/A-9.8
7. SHADE STRUCTURE, SEE 22/A-9.4
8. ROOF ACCESS HATCH, SEE 17/A-9.7
9. ROOF ANCHOR, SEE 24/A-9.5

ROOF PLAN GENERAL NOTES

1. LOCATE ALL METAL ROOF PENETRATIONS IN THE CENTER OF THE PAN. DO NOT INTERRUPT STANDING SEAMS.
2. MINIMUM THICKNESS OF RIGID INSULATION TO BE 1" AT LOW POINT OF ROOF. SLOPE MIN 1/4":12" TO DRAIN. ALL RIGID INSULATION OVERLAID WITH 1/2" PERLITE BOARD.
3. ALL ROOFING TO BE CLASS A.
4. REFER TO MECHANICAL AND ELECTRICAL DRAWINGS FOR ROOF PENETRATION LOCATIONS NOT OTHERWISE INDICATED, TYPICAL.
5. MECHANICAL UNIT MOUNTING CURBS PER 13/A-9.5 S.M.D.
6. MECHANICAL OR PLUMBING VENT FLASHING BOOTS, SEE 20/A-9.6

Z101009

ROOF PLAN LEGEND

SEE FINISH SCHEDULE ON SHEET A-8.3 FOR ADDITIONAL INFORMATION

- +0'-0" — DIMENSION INDICATING TOP OF ROOF LEVEL. SEE DETAILS FOR TOP OF ROOF LOCATION WITHIN ASSEMBLY
- MODIFIED BITUMEN ROOFING O/ MTL FRAMING — 1/A-9.5
- MODIFIED BITUMEN ROOFING O/ WD FRAMING — 1/A-9.6
- MODIFIED BITUMEN ROOFING O/ TAPERED INSULATION
- PREFORMED METAL ROOFING O/ ACOUSTIC DECKING — 26/A-9.6
- SOLAR READY N.I.C.

KEY PLAN

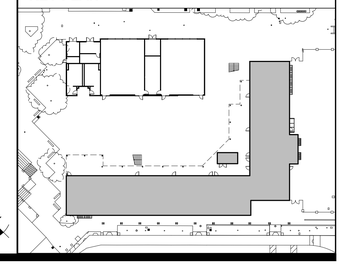

IDENTIFICATION STAMP
DIV. OF THE STATE ARCHITECT
APP: 01-119994 INC:
REVIEWED FOR
SS ☑ FLS ☑ ACS ☑
DATE: 08/16/2022

QUATTROCCHI KWOK ARCHITECTS
Main:
636 Fifth Street, Santa Rosa, CA 95404
East Bay:
55 Harrison Street, Suite 525,
Oakland, CA 94607
(707) 576-0829

LICENSED ARCHITECT
JIM THEISS
LICENSE # C22643
EXP JUNE 30, 2023
STATE OF CALIFORNIA

SIGNED: JUNE 24, 2022

LIBERTY HIGH SCHOOL

NEW CLASSROOM BUILDINGS

850 2ND STREET
BRENTWOOD, CA
94513

LIBERTY UNION HIGH SCHOOL DISTRICT

DSA APP NO. 01-119994

ARCH PROJECT NO:	1925.00
DRAWN BY:	JDS
DRAWING SCALE:	1/8" = 1'-0"
PTN: 61721-83	FILE NO: 7-H4

CONSTRUCTION DOCUMENTS

JUNE 24, 2022

SHEET TITLE

BLDG A - ROOF PLAN

SHEET NUMBER

A-A4.1

BIMcloud: archiserver - BIMcloud Basic for ARCHICAD 22/1925.00 Liberty HS Classroom, BLDG A, AC22:7/27/2022:5:28 PM

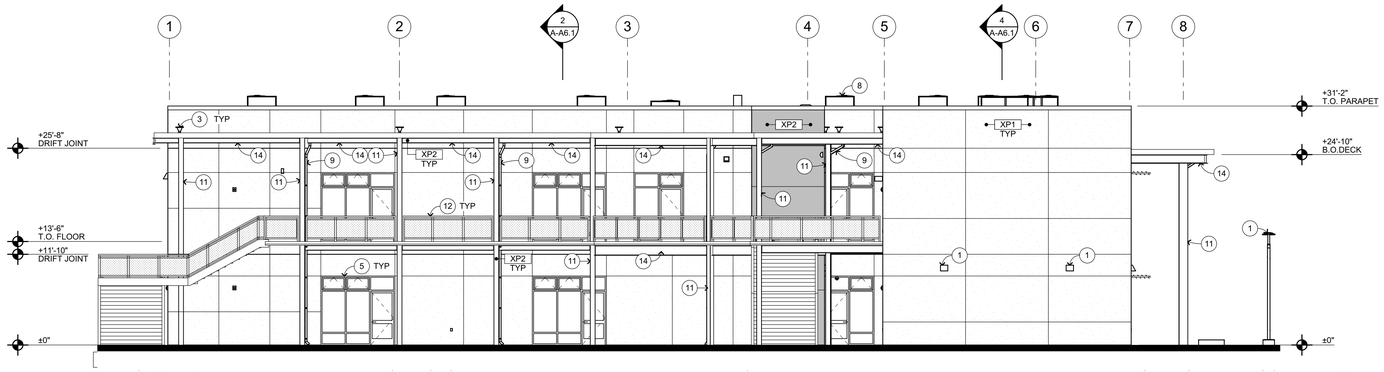

NORTH ELEVATION 1

1/8" = 1'-0"

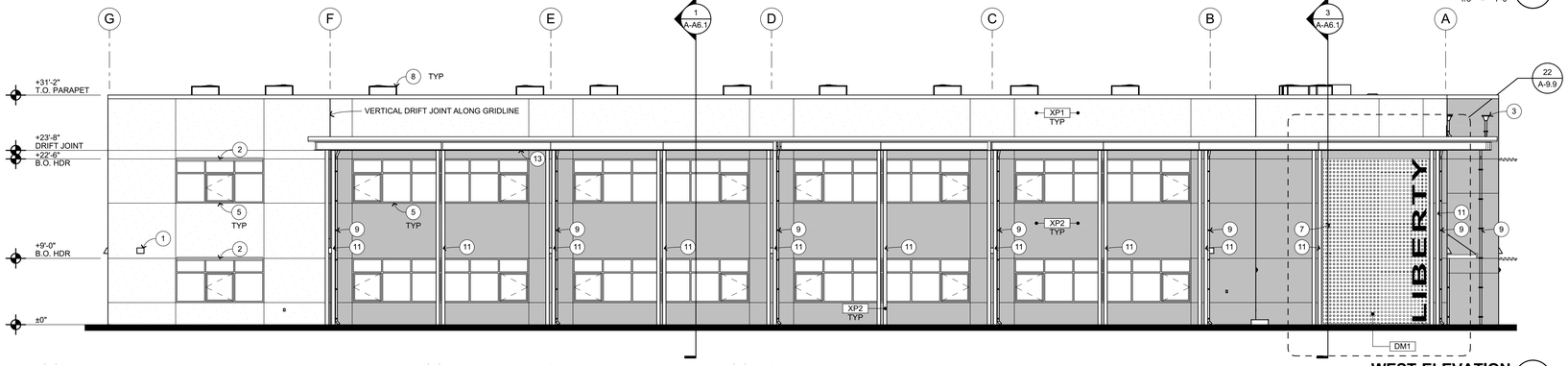

WEST ELEVATION 2

1/8" = 1'-0"

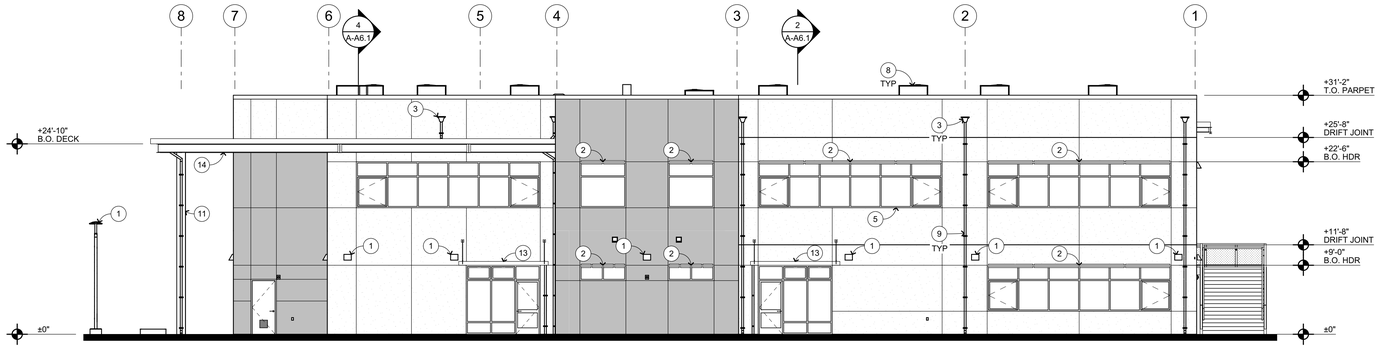

SOUTH ELEVATION 3

1/8" = 1'-0"

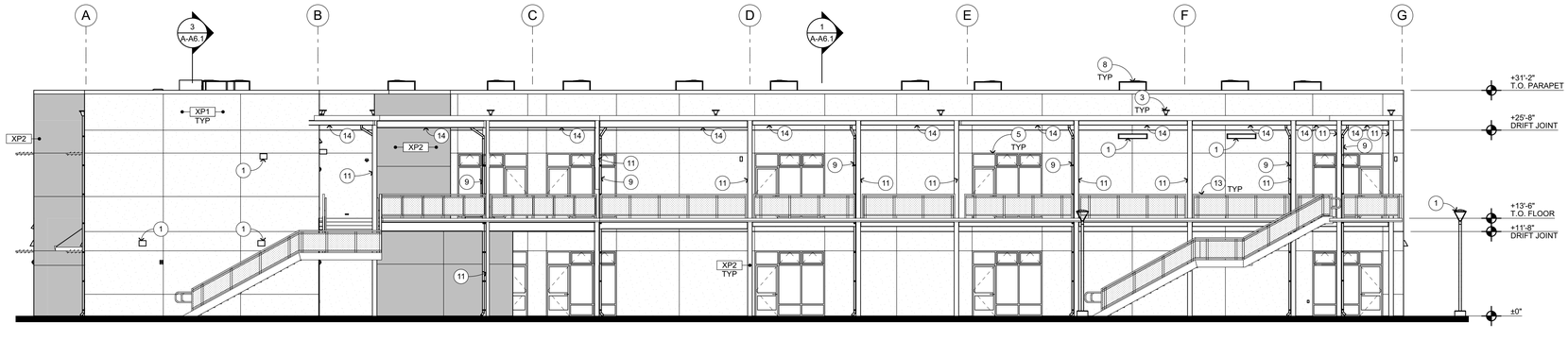

EAST ELEVATION 4

1/8" = 1'-0"

EXTERIOR ELEVATION KEYNOTES

NOT ALL KEYNOTES MAY APPLY TO THIS SHEET

1. LIGHT FIXTURE, S.E.D.
2. SHADE STRUCTURE, SEE 22/A-9.4
3. SCUPPER W/ CONDUCTOR HEAD, SEE 11/A-9.5
4. ACCESSIBLE HI-LO DRINKING FOUNTAIN W/ BOTTLE FILLER, SEE 2/A-10.3
5. STOREFRONT WINDOWS, SEE A-8.2 FOR WINDOW SCHEDULE
6. CURTAIN WALL SYSTEM
7. STRUCTURAL PERFORATED METAL SIGNAGE
8. MECHANICAL ITEM, S.M.D.
9. RAIN WATER LEADER, SEE 4/A-9.8
10. STANDING SEAM MTL ROOF, SEE 24/A-9.6
11. STRUCTURAL COLUMN, S.S.D.
12. GUARDRAIL, SEE 10/A-6.4
13. INTEGRATED RAIN CANOPY, SEE 2/A-9.7
14. STRUCTURAL BEAM, S.S.D.

EXTERIOR ELEVATION LEGEND

SEE FINISH SCHEDULE ON SHEET A-8.3 FOR FINISH INFORMATION

XX1 — XX1 REFERS TO EXTERIOR FINISH CODE SEE BELOW.

PLASTER CONTROL JOINT, TYP

XP1	CEMENT PLASTER	4/A-9.1
XP2	CEMENT PLASTER; COLUMNS	
DM1	PERFORATED METAL PANELS	

KEY PLAN

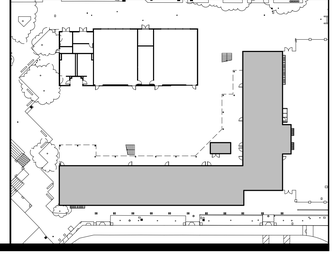

IDENTIFICATION STAMP
DIV. OF THE STATE ARCHITECT
APP: 01-119994 INC:
REVIEWED FOR
SS ☑ FLS ☑ ACS ☑
DATE: 08/16/2022

QUATTROCCHI KWOK ARCHITECTS
Main:
636 Fifth Street, Santa Rosa, CA 95404
East Bay:
55 Harrison Street, Suite 525,
Oakland, CA. 94607
(707) 576-0829

LICENSED ARCHITECT
JIM THEISS
LICENSE # C22643
EXP JUNE 30, 2023
STATE OF CALIFORNIA

SIGNED: JUNE 24, 2022

LIBERTY HIGH SCHOOL

NEW CLASSROOM BUILDINGS

850 2ND STREET
BRENTWOOD, CA
94513

LIBERTY UNION HIGH SCHOOL DISTRICT

DSA APP NO.	01-119994
ARCH PROJECT NO:	1925.00
DRAWN BY:	JDS
DRAWING SCALE:	1/8" = 1'-0"
PTN: 61721-83	FILE NO: 7-H4

CONSTRUCTION DOCUMENTS

JUNE 24, 2022

SHEET TITLE

BLDG A - EXTERIOR ELEVATIONS

SHEET NUMBER

A-A5.1

BIMcloud: archiserver - BIMcloud Basic for ARCHICAD 22/1925.00 Liberty HS Classroom, BLDG A, AC22.7/27/2022-5:28 PM

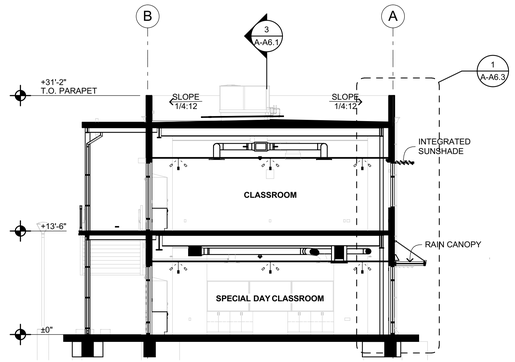

SECTION THROUGH SPECIAL DAY CLASSROOM 2
1/8" = 1'-0"

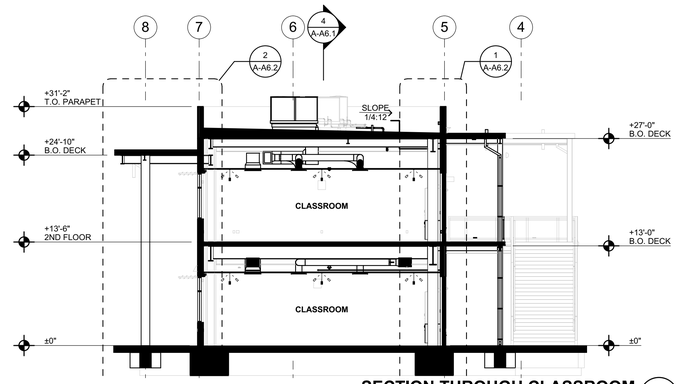

SECTION THROUGH CLASSROOM 1
1/8" = 1'-0"

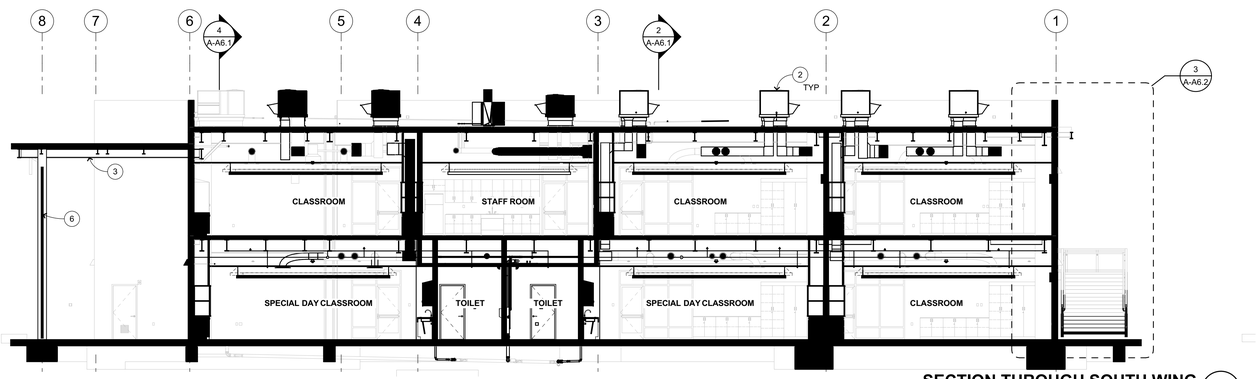

SECTION THROUGH SOUTH WING 3
1/8" = 1'-0"

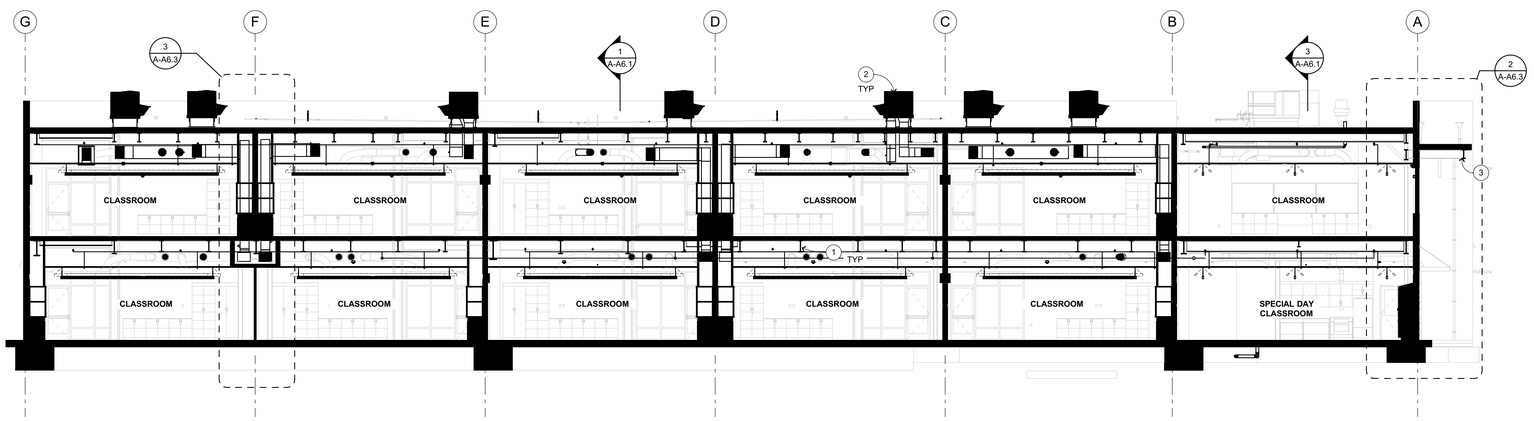

SECTION THROUGH WEST WING 4
1/8" = 1'-0"

SECTION KEYNOTES

NOT ALL KEYNOTES MAY APPLY TO THIS SHEET

1. STRUCTURAL FRAMING, S.S.D.
2. MECHANICAL ITEM, S.M.D.
3. EXPOSED STRUCTURAL BEAMS, S.S.D.
4. ROOF HATCH, SEE 17/A-9.7
5. MOTORIZED WINDOW SHADES, SEE 28/A-10.3
6. PERFORATED METAL SIGNAGE, SEE 22/A-9.9

KEY PLAN

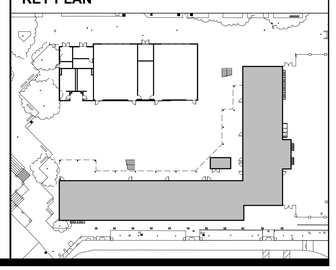

IDENTIFICATION STAMP
DIV. OF THE STATE ARCHITECT
APP: 01-119994 INC:
REVIEWED FOR
SS ☑ FLS ☑ ACS ☑
DATE: 08/16/2022

QUATTROCCHI KWOK ARCHITECTS
Main:
636 Fifth Street, Santa Rosa, CA 95404
East Bay:
55 Harrison Street, Suite 525,
Oakland, CA 94607
(707) 576-0929

LICENSED ARCHITECT
JIM THEISS
LICENSE # C22643
EXP JUNE 30, 2023
STATE OF CALIFORNIA

SIGNED: JUNE 24, 2022

LIBERTY HIGH SCHOOL

NEW CLASSROOM BUILDINGS

850 2ND STREET
BRENTWOOD, CA
94513

LIBERTY UNION HIGH SCHOOL DISTRICT

DSA APP NO. 01-119994

ARCH PROJECT NO:	1925.00
DRAWN BY:	JDS
DRAWING SCALE:	1/8" = 1'-0"
PTN: 61721-83	FILE NO: 7-H4

CONSTRUCTION DOCUMENTS

JUNE 24, 2022

SHEET TITLE

BLDG A - BUILDING SECTIONS

SHEET NUMBER

A-A6.1

BIMcloud: archiserver - BIMcloud Basic for ARCHICAD 22/1925.00 Liberty HS Classroom_BLDG A_AC22/7/27/2022/5:29 PM

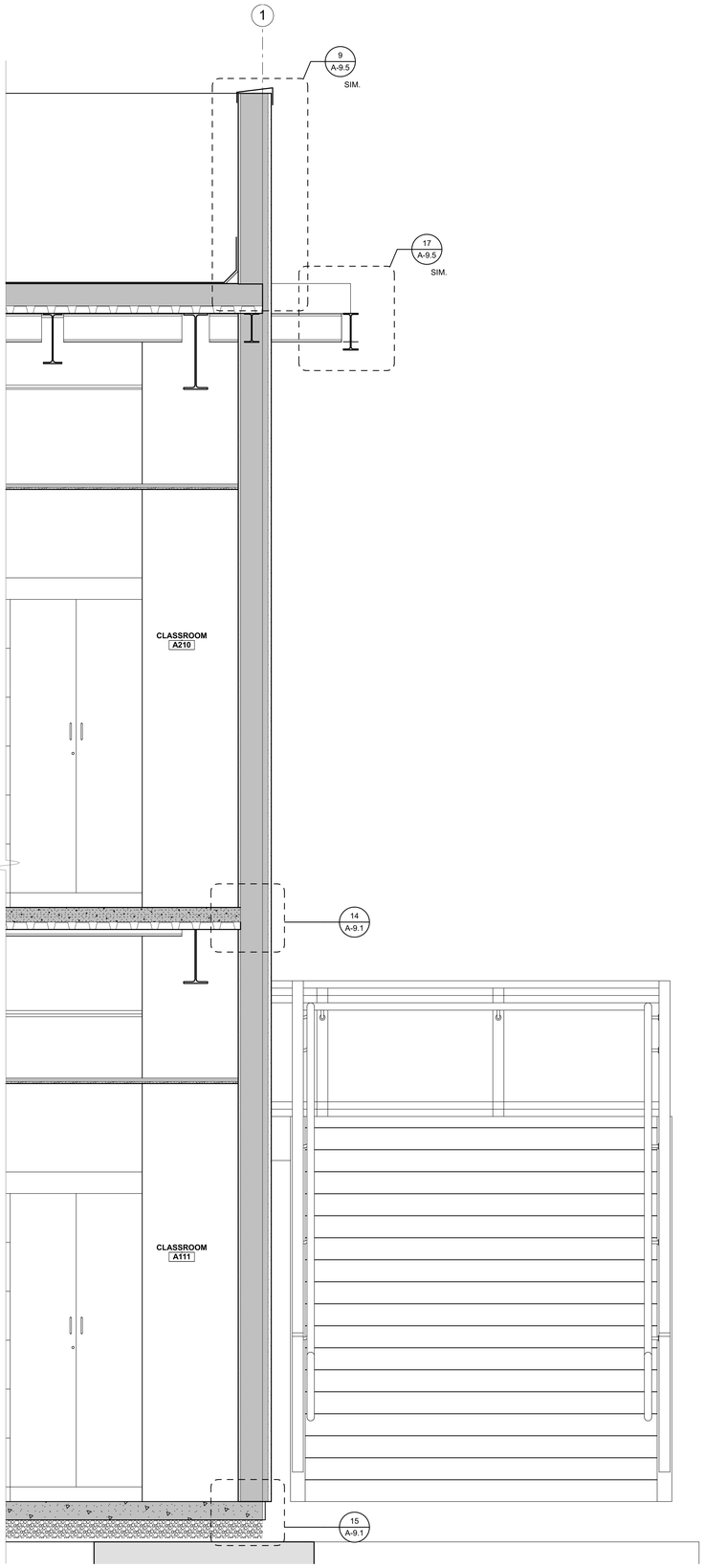

EXT WALL AT STAIR 3

3/4" = 1'-0"

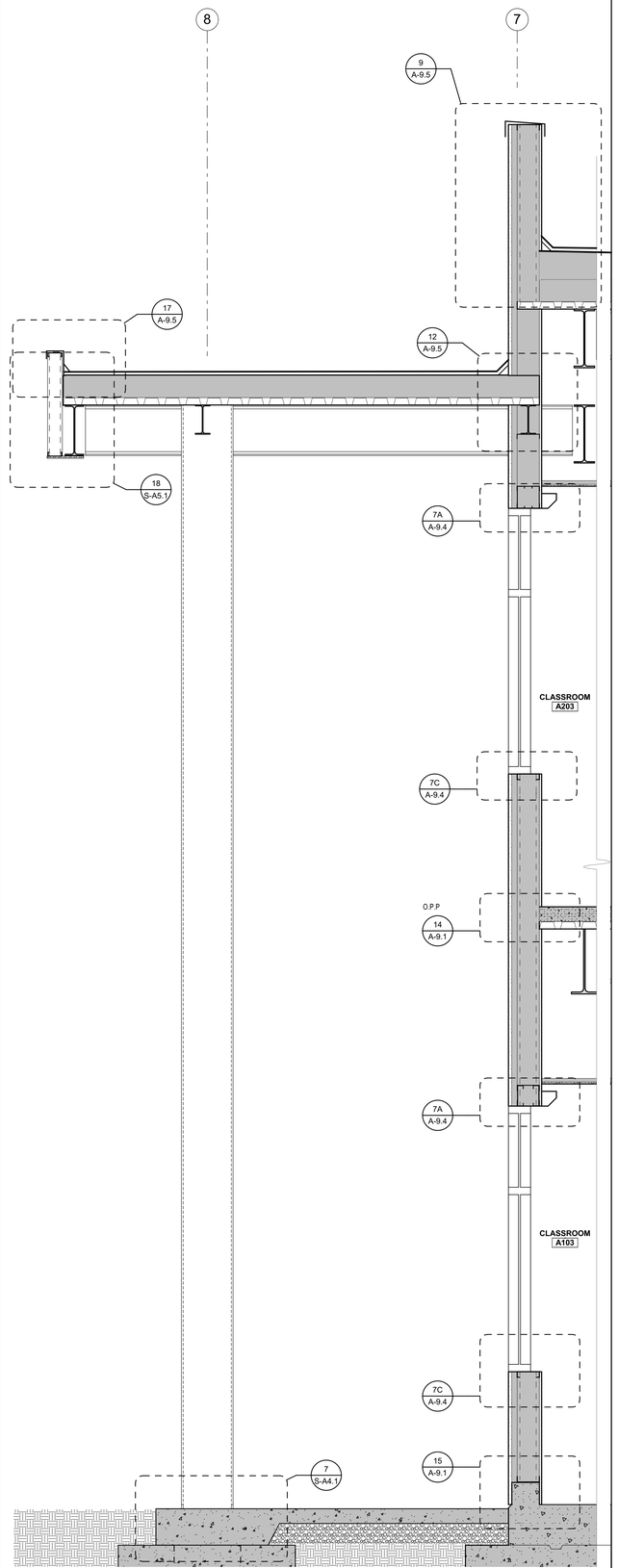

EXT WALL AT CANOPY 2

3/4" = 1'-0"

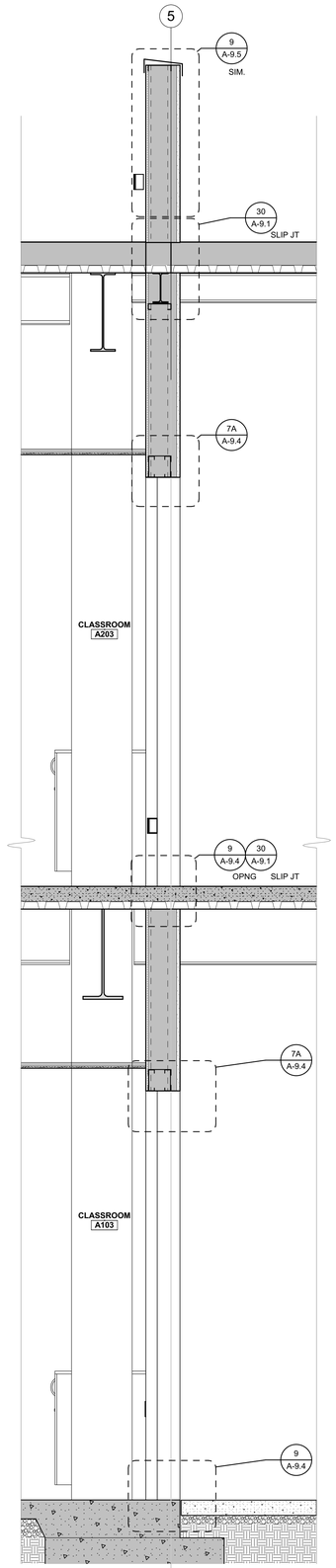

EXT WALL AT DECK 1

3/4" = 1'-0"

BIMcloud: archiserver - BIMcloud Basic for ARCHICAD 22/1925.00 Liberty HS Classroom, BLDG A, AC22-7/27/2022 5:29 PM

IDENTIFICATION STAMP
DIV. OF THE STATE ARCHITECT
APP: 01-119994 INC:
REVIEWED FOR
SS ☑ FLS ☑ ACS ☑
DATE: 08/16/2022

QUATTROCCHI KWOK ARCHITECTS
Main:
636 Fifth Street, Santa Rosa, CA 95404
East Bay:
55 Harrison Street, Suite 525,
Oakland, CA 94607
(707) 576-0829

LICENSED ARCHITECT
JIM THEISS
LICENSE # C22643
EXP JUNE 30, 2023
STATE OF CALIFORNIA

SIGNED: JUNE 24, 2022

LIBERTY HIGH SCHOOL

NEW CLASSROOM BUILDINGS

850 2ND STREET
BRENTWOOD, CA
94513

LIBERTY UNION HIGH SCHOOL DISTRICT

DSA APP NO. 01-119994

ARCH PROJECT NO:	1925.00
DRAWN BY:	JDS
DRAWING SCALE:	3/4" = 1'-0"
PTN: 61721-83	FILE NO: 7-H4

CONSTRUCTION DOCUMENTS

JUNE 24, 2022

SHEET TITLE

BLDG A - WALL SECTIONS

SHEET NUMBER

A-A6.2

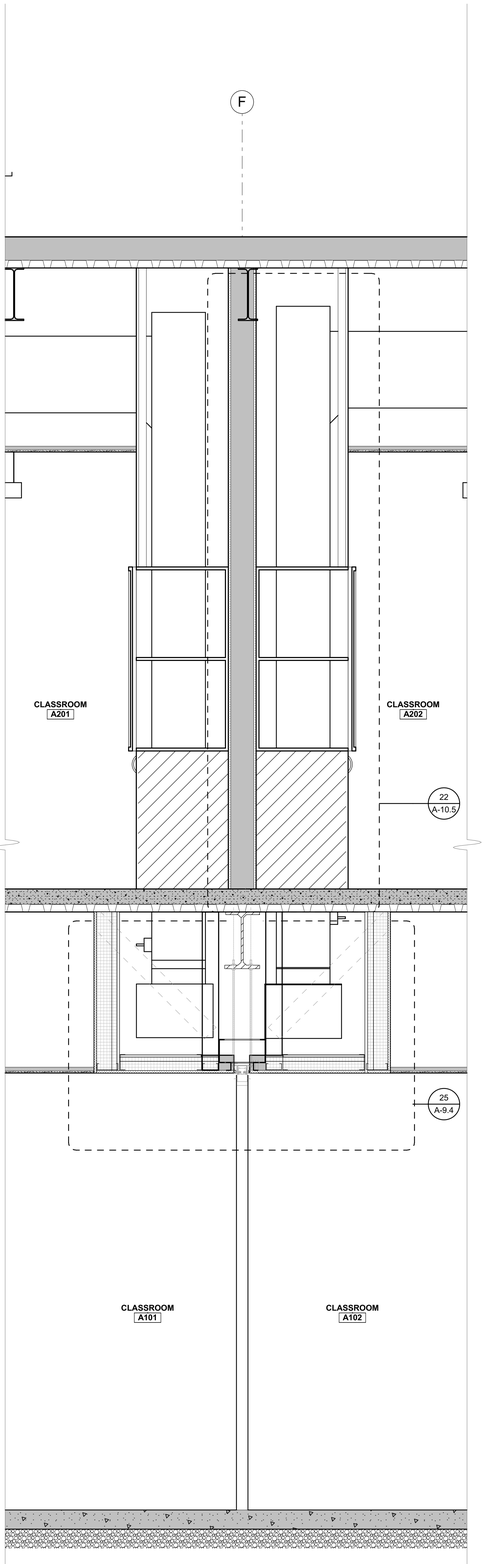

INT WALL AT FOLDING PARTITION 3

3/4" = 1'-0"

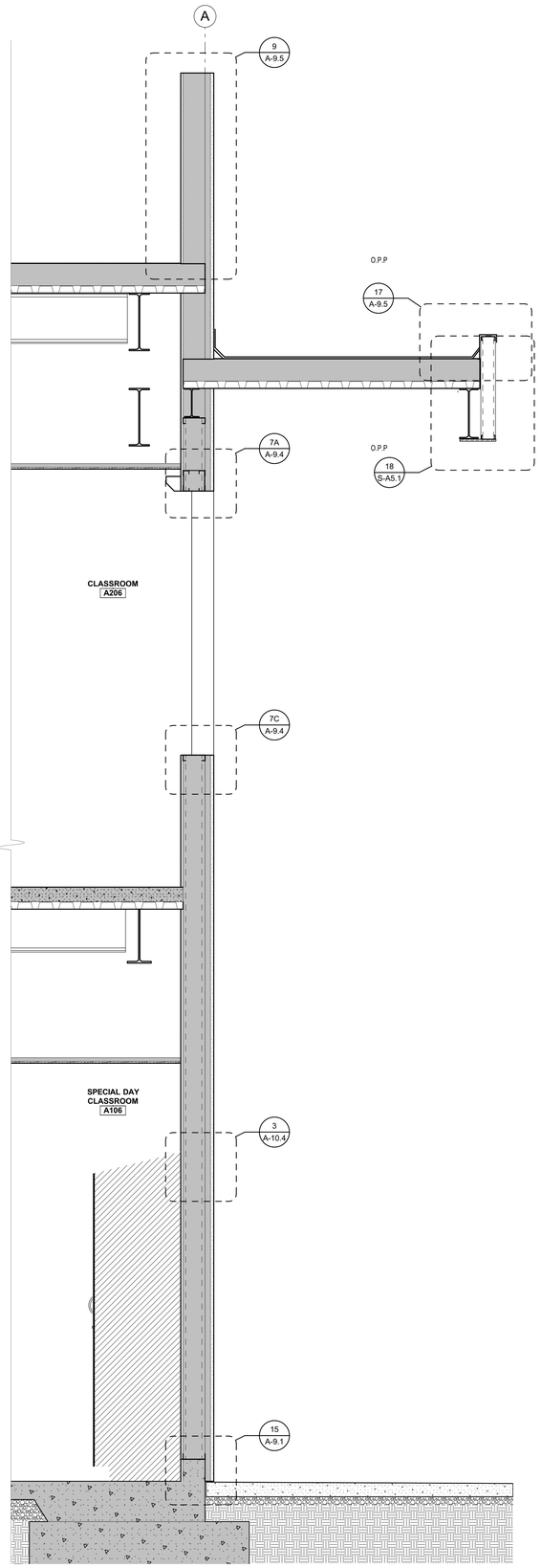

EXT WALL AT OVERHANG 2

3/4" = 1'-0"

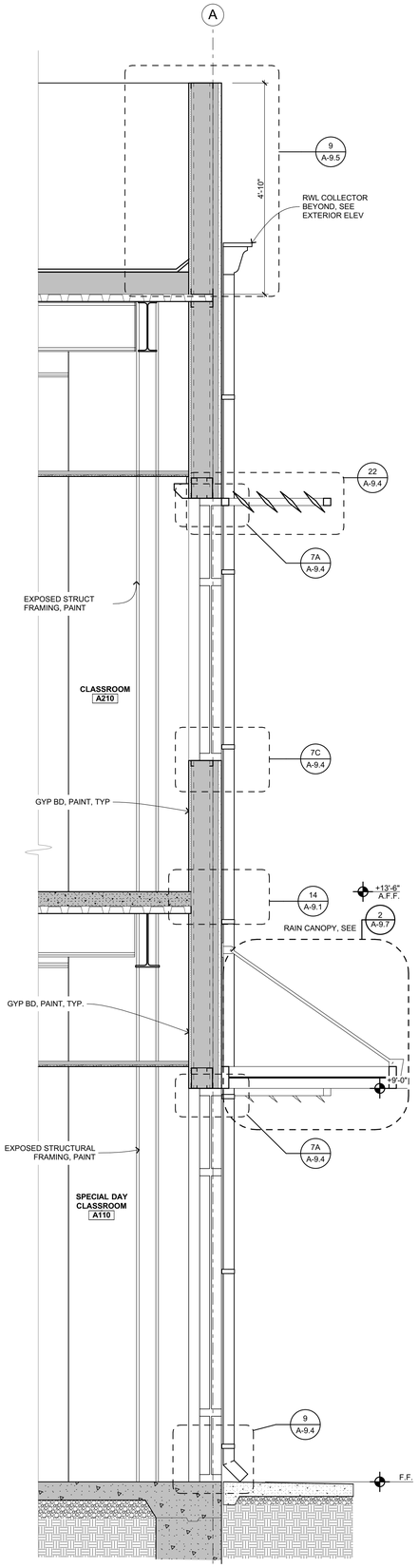

EXT WALL AT RAIN CANOPY 1

3/4" = 1'-0"

KEY PLAN

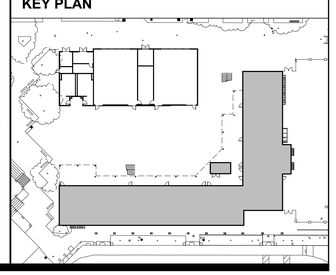

IDENTIFICATION STAMP
DIV. OF THE STATE ARCHITECT
APP: 01-119994 INC:
REVIEWED FOR
SS ☑ FLS ☑ ACS ☑
DATE: 08/16/2022

QUATTROCCHI KWOK
ARCHITECTS
Main:
636 Fifth Street, Santa Rosa, CA 95404
East Bay:
55 Harrison Street, Suite 525,
Oakland, CA 94607
(707) 576-0829

LICENSED ARCHITECT
JIM THEISS
LICENSE # C22643
EXP JUNE 30, 2023
STATE OF CALIFORNIA

SIGNED: JUNE 24, 2022

LIBERTY HIGH SCHOOL

NEW CLASSROOM BUILDINGS

850 2ND STREET
BRENTWOOD, CA
94513

LIBERTY UNION
HIGH SCHOOL
DISTRICT

DSA APP NO. 01-119994

ARCH PROJECT NO:	1925.00
DRAWN BY:	JDS
DRAWING SCALE:	3/4" = 1'-0"
PTN: 61721-83	FILE NO: 7-H4

CONSTRUCTION DOCUMENTS

JUNE 24, 2022

SHEET TITLE

BLDG A - WALL SECTIONS

SHEET NUMBER

A-A6.3

BIMcloud: archiserver - BIMcloud Basic for ARCHICAD 22/1925.00 Liberty HS Classroom_BLDG A_AC22:7/27/2022 5:29 PM

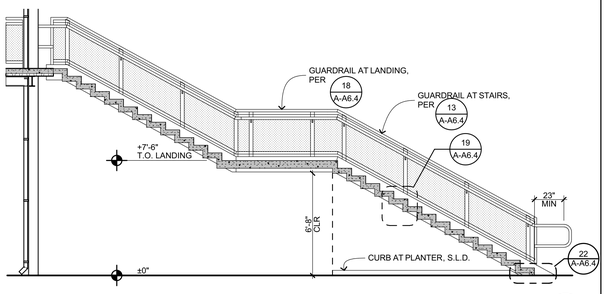

SECTION THROUGH STAIR 2

1/4" = 1'-0" **21**

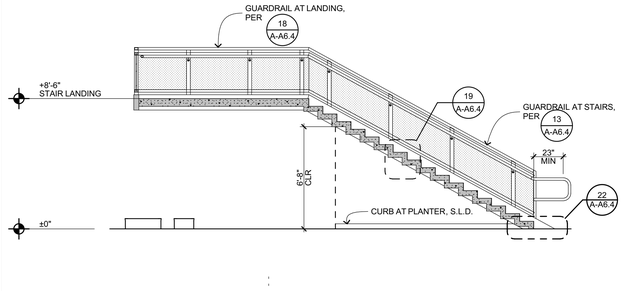

WEST SECTION THROUGH STAIR 1

1/4" = 1'-0" **11**

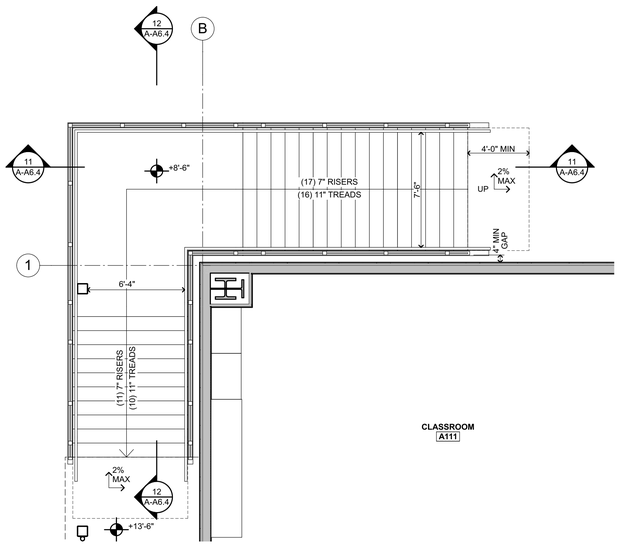

STAIR 1 PLAN

1/4" = 1'-0" **2**

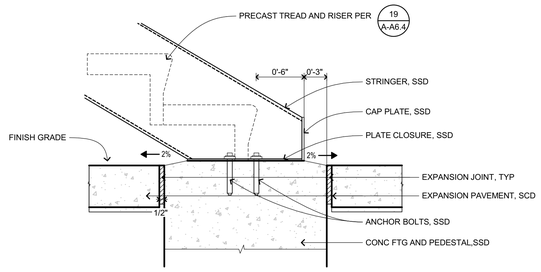

STAIR STRINGER AT GRADE

1 1/2"= 1'-0" **22**

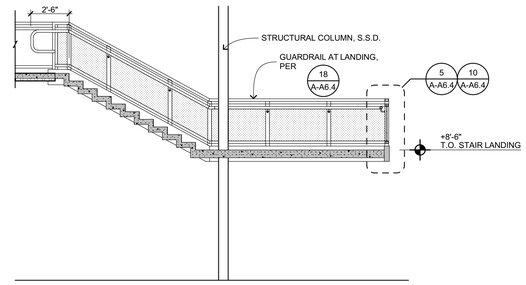

NORTH SECTION THROUGH STAIR 1

1/4" = 1'-0" **12**

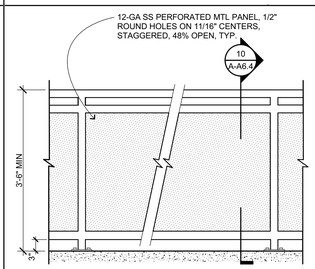

GUARDRAIL ELEVATION

3/4" = 1'-0" B403105 **18**

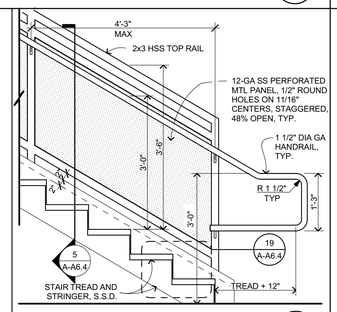

GUARDRAIL AT STAIRS

3/4" = 1'-0" XX_B403102 1925.00 **13**

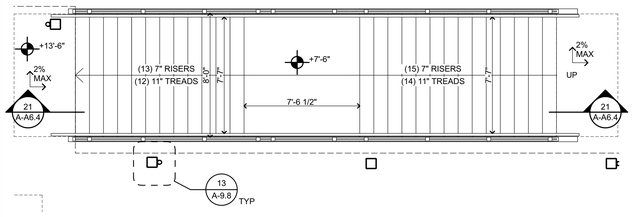

STAIR 2 PLAN

1/4" = 1'-0" **3**

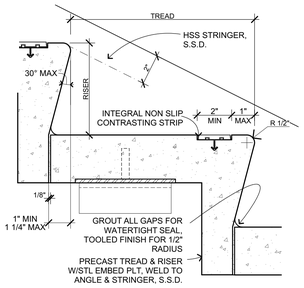

EXT PRECAST STAIR

3" = 1'-0" B401103 **19**

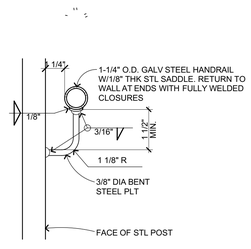

SECTION

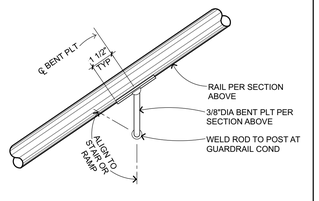

ELEVATION

HANDRAIL

3" = 1'-0" C203104 **15**

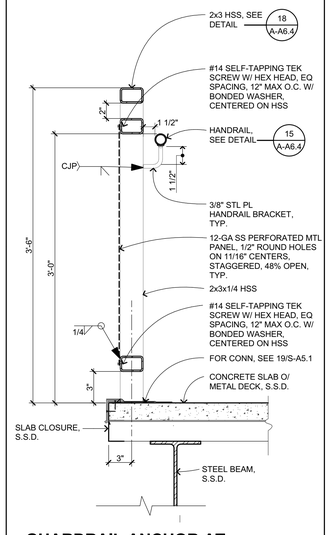

GUARDRAIL ANCHOR AT CONC/MTL DECK

1 1/2"= 1'-0" B403107 1925.00 **10**

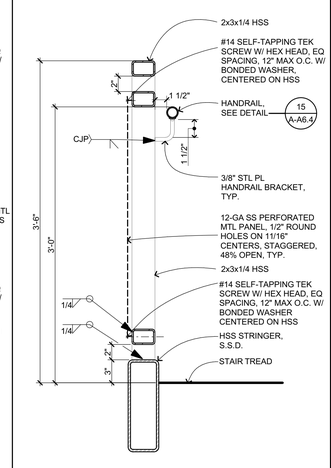

GUARDRAIL AT STAIR SECTION

1 1/2"= 1'-0" B403103 1925.00 **5**

IDENTIFICATION STAMP
DIV. OF THE STATE ARCHITECT
APP: 01-119994 INC:
REVIEWED FOR
SS ☑ FLS ☑ ACS ☑
DATE: 08/16/2022

QUATTROCCHI KWOK ARCHITECTS
Main:
636 Fifth Street, Santa Rosa, CA 95404
East Bay:
55 Harrison Street, Suite 525,
Oakland, CA 94607
(707) 576-0829

LICENSED ARCHITECT
JIM THEISS
LICENSE # C22643
EXP JUNE 30, 2023
STATE OF CALIFORNIA

SIGNED: JUNE 24, 2022

LIBERTY HIGH SCHOOL

NEW CLASSROOM BUILDINGS

850 2ND STREET
BRENTWOOD, CA
94513

LIBERTY UNION HIGH SCHOOL DISTRICT

DSA APP NO. 01-119994
ARCH PROJECT NO: 1925.00
DRAWN BY:
DRAWING SCALE: AS NOTED
PTN: 61721-83 FILE NO: 7-H4
CONSTRUCTION DOCUMENTS
JUNE 24, 2022

SHEET TITLE
BLDG A - ENLARGED STAIR PLANS AND ELEVATIONS

SHEET NUMBER
A-A6.4

BIMcloud: archiserver - BIMcloud Basic for ARCHICAD 22/1925.00 Liberty HS Classroom, BLDG A, AC22-7/27/2022 5:29 PM

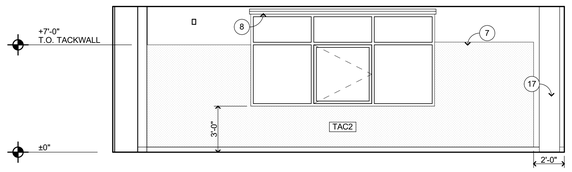

WEST

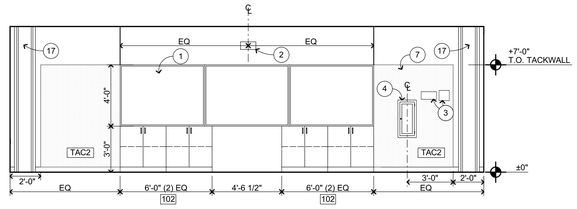

NORTH

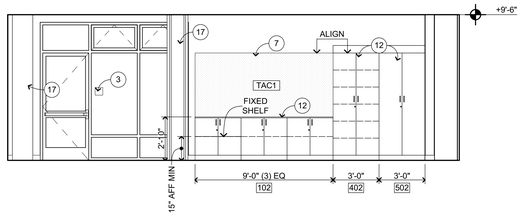

EAST

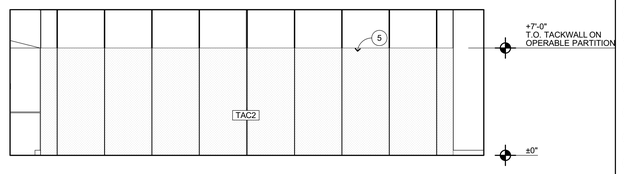

SOUTH

CLASSROOM **A101**

1/4" = 1'-0" A-A2.1

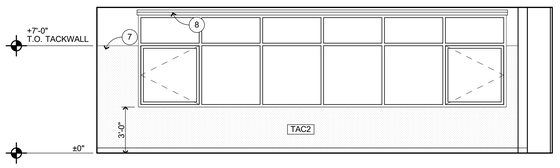

WEST

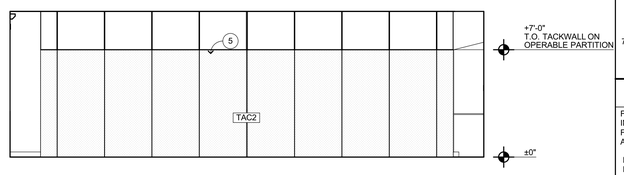

NORTH

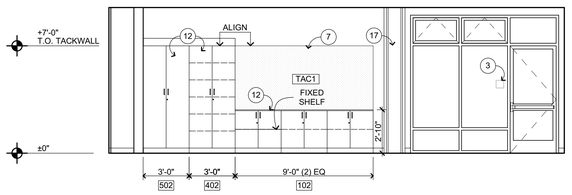

EAST

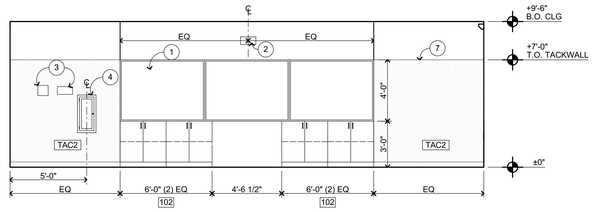

SOUTH

CLASSROOM **A102**

1/4" = 1'-0" A-A2.1

INTERIOR ELEVATION KEYNOTES

NOT ALL KEYNOTES MAY APPLY TO THIS SHEET

1. MARKER BOARD CASEWORK
2. WALL MOUNTED SHORT THROW PROJECTOR, OFOI
3. SIGNAGE, SEE 10/A-8.1
4. SEMI-RECESSED FIRE EXTINGUISHER, SEE 23/A-9.3 SIM
5. SOLID FOLDING PARTITION W/ TACKWALL COVERING
6. FOAM WALL PADS
7. TACK-WALL, SEE FIN SCHED
8. MANUAL WINDOW SHADES, SEE 27/A-10.3
9. MECHANICAL ITEM, S.M.D.
10. EYEWASH STATION
11. FUME HOOD
12. CASEWORK, SEE 3/A-10.4
13. OPEN-SHELVING BOOKSHELVES
14. FREE STANDING STAINLESS STEEL SINKS
15. ELECTRICAL ITEM, S.E.D.
16. PLUMBING ITEM, S.P.D.
17. STRUCTURAL ITEM, S.S.D.
18. MOP SINK, S.P.D.
19. ROOF ACCESS LADDER, SEE 24/A-9.7 25/A-9.7 MTL WD
20. MOTORIZED WINDOW SHADES, SEE 28/A-10.3
21. TOILET PARTITION, SEE 17/A-10.3 18/A-10.3
22. 4X8 WALL MOUNTED MARKERBOARD, SEE 34/A-10.3
23. ELECTRICAL APPLIANCE, OFCI

INTERIOR ELEVATION GENERAL NOTES

1. NOTES AND SYMBOLS ARE TO APPLY AT ALL AREAS OF SIMILAR GRAPHIC REPRESENTATION. SUCH INDICATIONS MAY BE LIMITED TO PROMOTE CLARITY OR AVOID REDUNDANCY. NO LIMITATION OF APPLICATION SHALL BE CONSTRUED WITHOUT SPECIFIC NOTATION.
2. REFER TO MECHANICAL DRAWINGS FOR REGISTERS AND VENTS NOT OTHERWISE SHOWN.
3. REFER TO ELECTRICAL DRAWINGS FOR HORNS, SPEAKERS, PULL STATIONS AND OTHER FEATURES NOT OTHERWISE SHOWN.
4. TYPICAL MOUNTING HEIGHTS OF ACCESSIBLE ELEMENTS AT ACCESSIBLE FIXTURES SEE 5/A-10.3
5. FLUSH VALVE HANDLES SHALL BE LOCATED AT THE WIDE SIDE OF ACCESSIBLE STALL.
6. FLOORING & BASE SHALL EXTEND UNDER ACCESSIBLE SINK/LAVATORY BASE CABINETS TO THE WALL. WATER SUPPLY AND DRAINPIPES ACCESSIBLE UNDER LAVATORIES SHALL BE INSULATED OR OTHERWISE COVERED. THERE SHALL BE NO SHARP OR ABRASIVE SURFACES UNDER LAVATORIES.
7. PROVIDE SOLID BLOCKING FOR CABINET, ACCESSORY, OR EQUIPMENT MOUNTING 1/A-10.3 WD FRMG 21/A-10.3 MTL FRMG

WALL FINISH CODES

FOR OVERALL WALL AND BASE FINISHES, SEE FINISH PLANS. FOR MATERIAL INFORMATION, SEE FINISH SCHEDULE SEE SHEET A-8.3. FOR PAINT FINISHES SEE SEC. 09 9113 (EXTERIOR) & 09 9123 (INTERIOR). ALL GYP BD TO BE TYPE 'X'.

P1 P2	PAINT
WT1 WT2	CERAMIC WALL TILE 35/A-10.3
TAC1 TAC2	TACK WALL 9/A-10.3
AP1	ACOUSTIC PANELS
MP1	METAL PERFORATED WALL PANELS
WP1	FRP PANEL
WP3	WALL FOAM PAD
PLY1	3/4" MDO FIRE RATED PLYWOOD

KEY PLAN

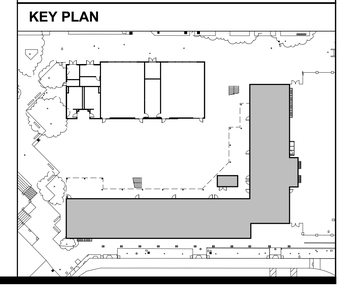

IDENTIFICATION STAMP
DIV. OF THE STATE ARCHITECT
APP: 01-119994 INC:
REVIEWED FOR
SS ☑ FLS ☑ ACS ☑
DATE: 08/16/2022

QUATTROCCHI KWOK ARCHITECTS
Main:
636 Fifth Street, Santa Rosa, CA 95404
East Bay:
55 Harrison Street, Suite 525,
Oakland, CA 94607
(707) 576-0829

LICENSED ARCHITECT
JIM THEISS
LICENSE # C22643
EXP JUNE 30, 2023
STATE OF CALIFORNIA

SIGNED: JUNE 24, 2022

LIBERTY HIGH SCHOOL

NEW CLASSROOM BUILDINGS

850 2ND STREET
BRENTWOOD, CA
94513

LIBERTY UNION HIGH SCHOOL DISTRICT

DSA APP NO. 01-119994

ARCH PROJECT NO:	1925.00
DRAWN BY:	JDS
DRAWING SCALE:	1/4" = 1'-0"
PTN: 61721-83	FILE NO: 7-H4

CONSTRUCTION DOCUMENTS

JUNE 24, 2022

SHEET TITLE

INTERIOR ELEVATIONS

SHEET NUMBER

A-A7.1

BIMcloud: archiserver - BIMcloud Basic for ARCHICAD 22/1925.00 Liberty HS Classroom, BLDG A, AC22 7/27/2022 5:29 PM

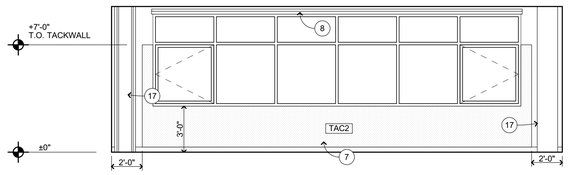

WEST

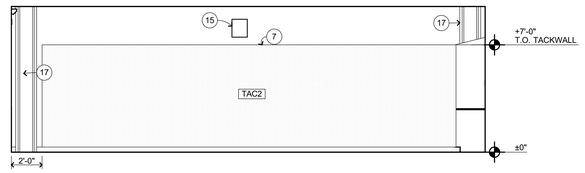

NORTH

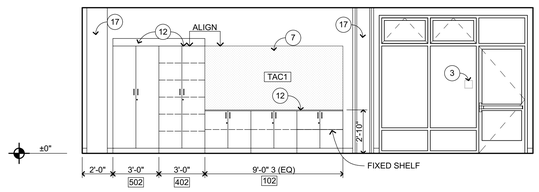

EAST

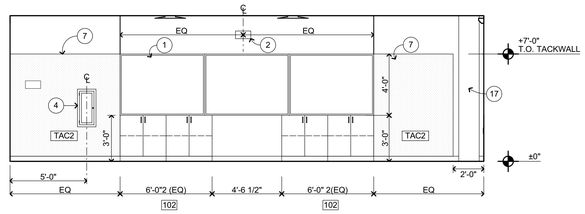

SOUTH

CLASSROOM **A103**

1/4" = 1'-0" A-A2.1

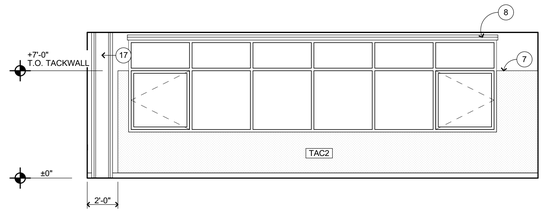

WEST

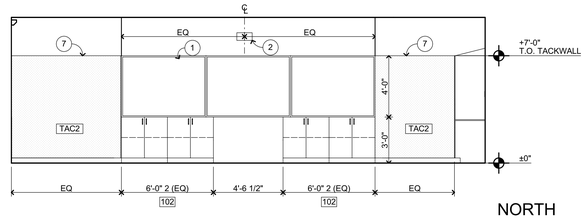

NORTH

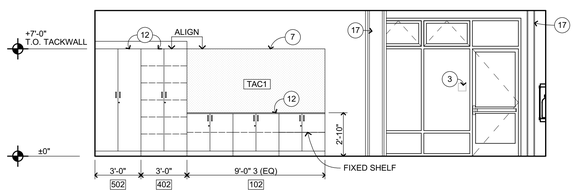

EAST

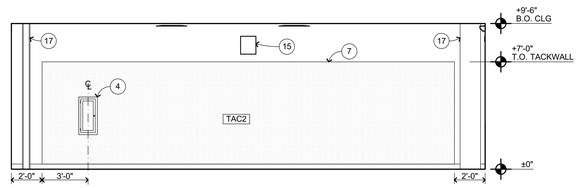

SOUTH

CLASSROOM **A104**

1/4" = 1'-0" A-A2.1

INTERIOR ELEVATION KEYNOTES

NOT ALL KEYNOTES MAY APPLY TO THIS SHEET

1. MARKER BOARD CASEWORK
2. WALL MOUNTED SHORT THROW PROJECTOR, OFOI
3. SIGNAGE, SEE 10/A-8.1
4. SEMI-RECESSED FIRE EXTINGUISHER, SEE 23/A-9.3 SIM
5. SOLID FOLDING PARTITION W/ TACKWALL COVERING
6. FOAM WALL PADS
7. TACK-WALL, SEE FIN SCHED
8. MANUAL WINDOW SHADES, SEE 27/A-10.3
9. MECHANICAL ITEM, S.M.D.
10. EYEWASH STATION
11. FUME HOOD
12. CASEWORK, SEE 3/A-10.4
13. OPEN-SHELVING BOOKSHELVES
14. FREE STANDING STAINLESS STEEL SINKS
15. ELECTRICAL ITEM, S.E.D.
16. PLUMBING ITEM, S.P.D.
17. STRUCTURAL ITEM, S.S.D.
18. MOP SINK, S.P.D.
19. ROOF ACCESS LADDER, SEE 24/A-9.7 25/A-9.7
20. MOTORIZED WINDOW SHADES, SEE 28/A-10.3 MTL WD
21. TOILET PARTITION, SEE 17/A-10.3 18/A-10.3
22. 4X8 WALL MOUNTED MARKERBOARD, SEE 34/A-10.3
23. ELECTRICAL APPLIANCE, OFCI

INTERIOR ELEVATION GENERAL NOTES

1. NOTES AND SYMBOLS ARE TO APPLY AT ALL AREAS OF SIMILAR GRAPHIC REPRESENTATION. SUCH INDICATIONS MAY BE LIMITED TO PROMOTE CLARITY OR AVOID REDUNDANCY. NO LIMITATION OF APPLICATION SHALL BE CONSTRUED WITHOUT SPECIFIC NOTATION.
2. REFER TO MECHANICAL DRAWINGS FOR REGISTERS AND VENTS NOT OTHERWISE SHOWN.
3. REFER TO ELECTRICAL DRAWINGS FOR HORNS, SPEAKERS, PULL STATIONS AND OTHER FEATURES NOT OTHERWISE SHOWN.
4. TYPICAL MOUNTING HEIGHTS OF ACCESSIBLE ELEMENTS AT ACCESSIBLE FIXTURES SEE 5/A-10.3
5. FLUSH VALVE HANDLES SHALL BE LOCATED AT THE WIDE SIDE OF ACCESSIBLE STALL.
6. FLOORING & BASE SHALL EXTEND UNDER ACCESSIBLE SINK/LAVATORY BASE CABINETS TO THE WALL. WATER SUPPLY AND DRAINPIPES ACCESSIBLE UNDER LAVATORIES SHALL BE INSULATED OR OTHERWISE COVERED. THERE SHALL BE NO SHARP OR ABRASIVE SURFACES UNDER LAVATORIES.
7. PROVIDE SOLID BLOCKING FOR CABINET, ACCESSORY, OR EQUIPMENT MOUNTING 1/A-10.3 WD FRMG 21/A-10.3 MTL FRMG

WALL FINISH CODES

FOR OVERALL WALL AND BASE FINISHES, SEE FINISH PLANS. FOR MATERIAL INFORMATION, SEE FINISH SCHEDULE SEE SHEET A-8.3. FOR PAINT FINISHES SEE SEC. 09 9113 (EXTERIOR) & 09 9123 (INTERIOR). ALL GYP BD TO BE TYPE 'X'.

P1 P2	PAINT
WT1 WT2	CERAMIC WALL TILE 35/A-10.3
TAC1 TAC2	TACK WALL 9/A-10.3
AP1	ACOUSTIC PANELS
MP1	METAL PERFORATED WALL PANELS
WP1	FRP PANEL
WP3	WALL FOAM PAD
PLY1	3/4" MDO FIRE RATED PLYWOOD

KEY PLAN

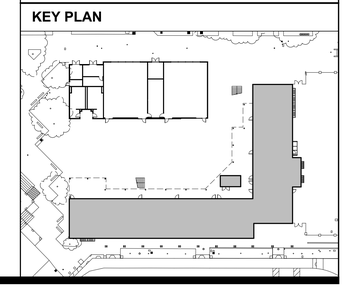

IDENTIFICATION STAMP
DIV. OF THE STATE ARCHITECT
APP: 01-119994 INC:
REVIEWED FOR
SS ☑ FLS ☑ ACS ☑
DATE: 08/16/2022

QUATTROCCHI KWOK ARCHITECTS
Main:
636 Fifth Street, Santa Rosa, CA 95404
East Bay:
55 Harrison Street, Suite 525,
Oakland, CA 94607
(707) 576-0829

LICENSED ARCHITECT
JIM THEISS
LICENSE # C22643
EXP JUNE 30, 2023
STATE OF CALIFORNIA

SIGNED: JUNE 24, 2022

LIBERTY HIGH SCHOOL

NEW CLASSROOM BUILDINGS

850 2ND STREET
BRENTWOOD, CA
94513

LIBERTY UNION HIGH SCHOOL DISTRICT

DSA APP NO. 01-119994

ARCH PROJECT NO:	1925.00
DRAWN BY:	JDS
DRAWING SCALE:	1/4" = 1'-0"
PTN: 61721-83	FILE NO: 7-H4

CONSTRUCTION DOCUMENTS

JUNE 24, 2022

SHEET TITLE

INTERIOR ELEVATIONS

SHEET NUMBER

A-A7.2

BIMcloud: archiserver - BIMcloud Basic for ARCHICAD 22/1925.00 Liberty HS Classroom, BLDG A, AC22 7/27/2022 5:29 PM

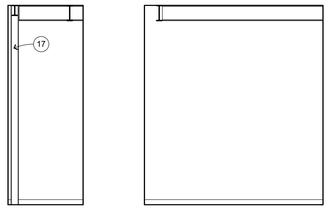

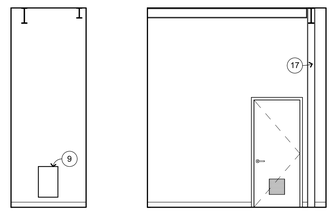

FIRE RISER **A107**
1/4" = 1'-0" A-A2.1

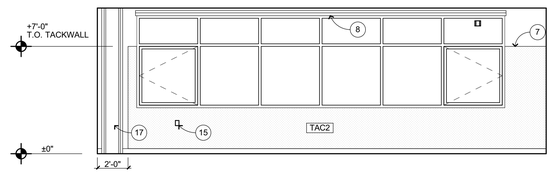

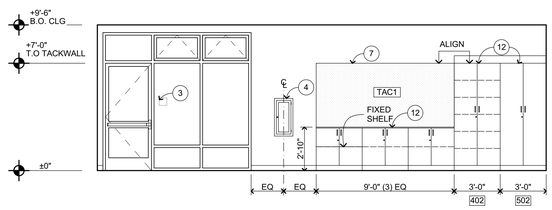

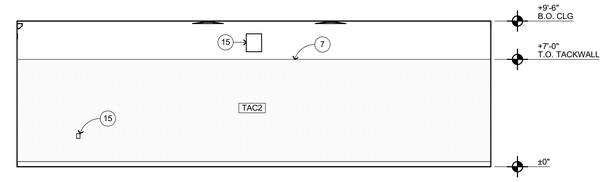

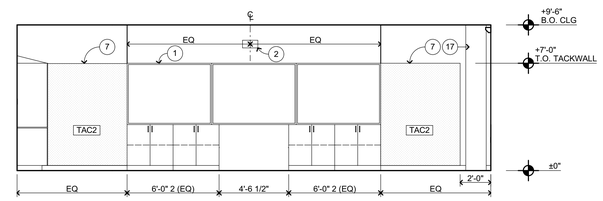

CLASSROOM **A105**
1/4" = 1'-0" A-A2.1

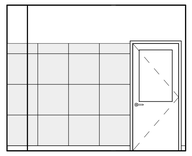

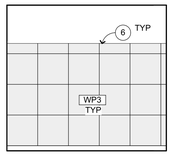

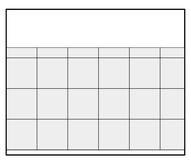

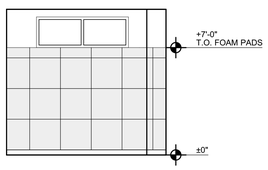

SENSORY ROOM **A106B**
1/4" = 1'-0" A-A2.1

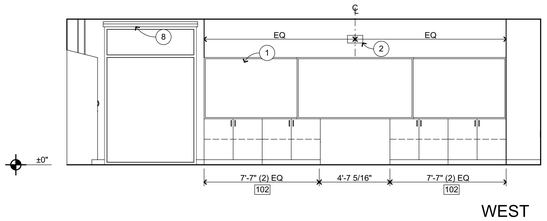

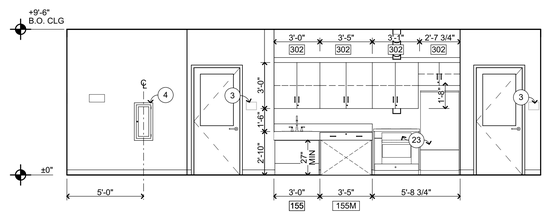

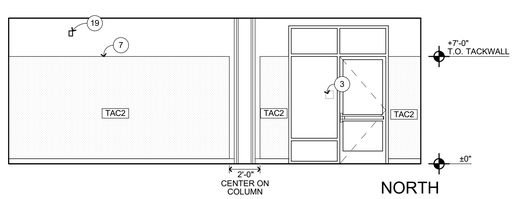

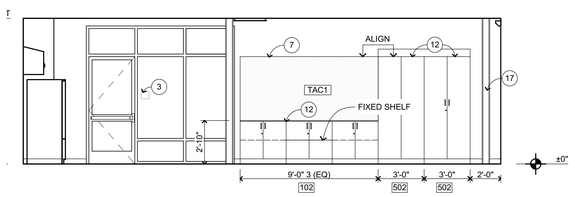

SPECIAL DAY CLASSROOM **A106**
1/4" = 1'-0" A-A2.1

INTERIOR ELEVATION KEYNOTES

NOT ALL KEYNOTES MAY APPLY TO THIS SHEET

1. MARKER BOARD CASEWORK
2. WALL MOUNTED SHORT THROW PROJECTOR, OFOI
3. SIGNAGE, SEE 10/A-8.1
4. SEMI-RECESSED FIRE EXTINGUISHER, SEE 23/A-9.3 SIM
5. SOLID FOLDING PARTITION W/ TACKWALL COVERING
6. FOAM WALL PADS
7. TACK-WALL, SEE FIN SCHED
8. MANUAL WINDOW SHADES, SEE 27/A-10.3
9. MECHANICAL ITEM, S.M.D.
10. EYEWASH STATION
11. FUME HOOD
12. CASEWORK, SEE 3/A-10.4
13. OPEN-SHELVING BOOKSHELVES
14. FREE STANDING STAINLESS STEEL SINKS
15. ELECTRICAL ITEM, S.E.D.
16. PLUMBING ITEM, S.P.D.
17. STRUCTURAL ITEM, S.S.D.
18. MOP SINK, S.P.D.
19. ROOF ACCESS LADDER, SEE 24/A-9.7 25/A-9.7 MTL WD
20. MOTORIZED WINDOW SHADES, SEE 28/A-10.3
21. TOILET PARTITION, SEE 17/A-10.3 18/A-10.3
22. 4X8 WALL MOUNTED MARKERBOARD, SEE 34/A-10.3
23. ELECTRICAL APPLIANCE, OFCI

INTERIOR ELEVATION GENERAL NOTES

1. NOTES AND SYMBOLS ARE TO APPLY AT ALL AREAS OF SIMILAR GRAPHIC REPRESENTATION. SUCH INDICATIONS MAY BE LIMITED TO PROMOTE CLARITY OR AVOID REDUNDANCY. NO LIMITATION OF APPLICATION SHALL BE CONSTRUED WITHOUT SPECIFIC NOTATION.
2. REFER TO MECHANICAL DRAWINGS FOR REGISTERS AND VENTS NOT OTHERWISE SHOWN.
3. REFER TO ELECTRICAL DRAWINGS FOR HORNS, SPEAKERS, PULL STATIONS AND OTHER FEATURES NOT OTHERWISE SHOWN.
4. TYPICAL MOUNTING HEIGHTS OF ACCESSIBLE ELEMENTS AT ACCESSIBLE FIXTURES SEE 5/A-10.3
5. FLUSH VALVE HANDLES SHALL BE LOCATED AT THE WIDE SIDE OF ACCESSIBLE STALL.
6. FLOORING & BASE SHALL EXTEND UNDER ACCESSIBLE SINK/LAVATORY BASE CABINETS TO THE WALL. WATER SUPPLY AND DRAINPIPES ACCESSIBLE UNDER LAVATORIES SHALL BE INSULATED OR OTHERWISE COVERED. THERE SHALL BE NO SHARP OR ABRASIVE SURFACES UNDER LAVATORIES.
7. PROVIDE SOLID BLOCKING FOR CABINET, ACCESSORY, OR EQUIPMENT MOUNTING 1/A-10.3 WD FRMG 21/A-10.3 MTL FRMG

WALL FINISH CODES

FOR OVERALL WALL AND BASE FINISHES, SEE FINISH PLANS. FOR MATERIAL INFORMATION, SEE FINISH SCHEDULE SEE SHEET A-8.3. FOR PAINT FINISHES SEE SEC. 09 9113 (EXTERIOR) & 09 9123 (INTERIOR).
ALL GYP BD TO BE TYPE 'X'.

P1 P2	PAINT
WT1 WT2	CERAMIC WALL TILE 35/A-10.3
TAC1 TAC2	TACK WALL 9/A-10.3
AP1	ACOUSTIC PANELS
MP1	METAL PERFORATED WALL PANELS
WP1	FRP PANEL
WP3	WALL FOAM PAD
PLY1	3/4" MDO FIRE RATED PLYWOOD

KEY PLAN

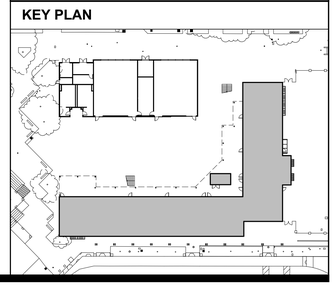

IDENTIFICATION STAMP
DIV. OF THE STATE ARCHITECT
APP: 01-119994 INC:
REVIEWED FOR
SS ☑ FLS ☑ ACS ☑
DATE: 08/16/2022

QUATTROCCHI KWOK ARCHITECTS
Main:
636 Fifth Street, Santa Rosa, CA 95404
East Bay:
55 Harrison Street, Suite 525,
Oakland, CA. 94607
(707) 576-0829

LICENSED ARCHITECT
JIM THEISS
LICENSE # C22643
EXP JUNE 30, 2023
STATE OF CALIFORNIA
SIGNED: JUNE 24, 2022

LIBERTY HIGH SCHOOL

NEW CLASSROOM BUILDINGS

850 2ND STREET
BRENTWOOD, CA
94513

LIBERTY UNION HIGH SCHOOL DISTRICT

DSA APP NO. 01-119994

ARCH PROJECT NO:	1925.00
DRAWN BY:	JDS
DRAWING SCALE:	1/4" = 1'-0"
PTN: 61721-83	FILE NO: 7-H4

CONSTRUCTION DOCUMENTS

JUNE 24, 2022

SHEET TITLE

INTERIOR ELEVATIONS

SHEET NUMBER

A-A7.3

BIMcloud: archiserver - BIMcloud Basic for ARCHICAD 22/1925.00 Liberty HS Classroom_BLDG A_AC22-7/27/2022-5:30 PM

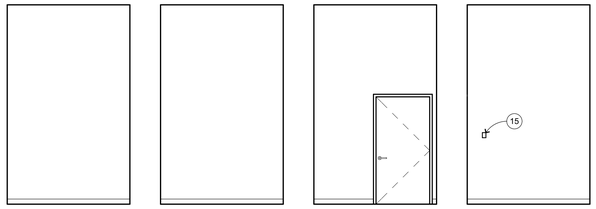

MACHINE RM **A112**
1/4" = 1'-0" A-A2.1

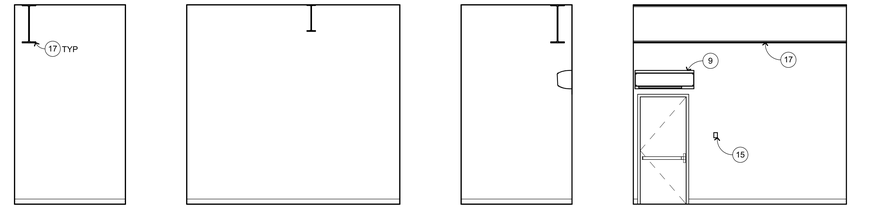

ELEC-IDF **A108**
1/4" = 1'-0" A-A2.1

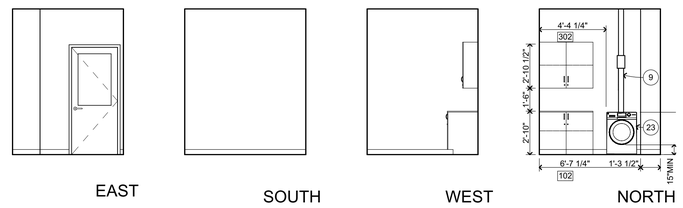

LAUNDRY **A109**
1/4" = 1'-0" A-A2.1

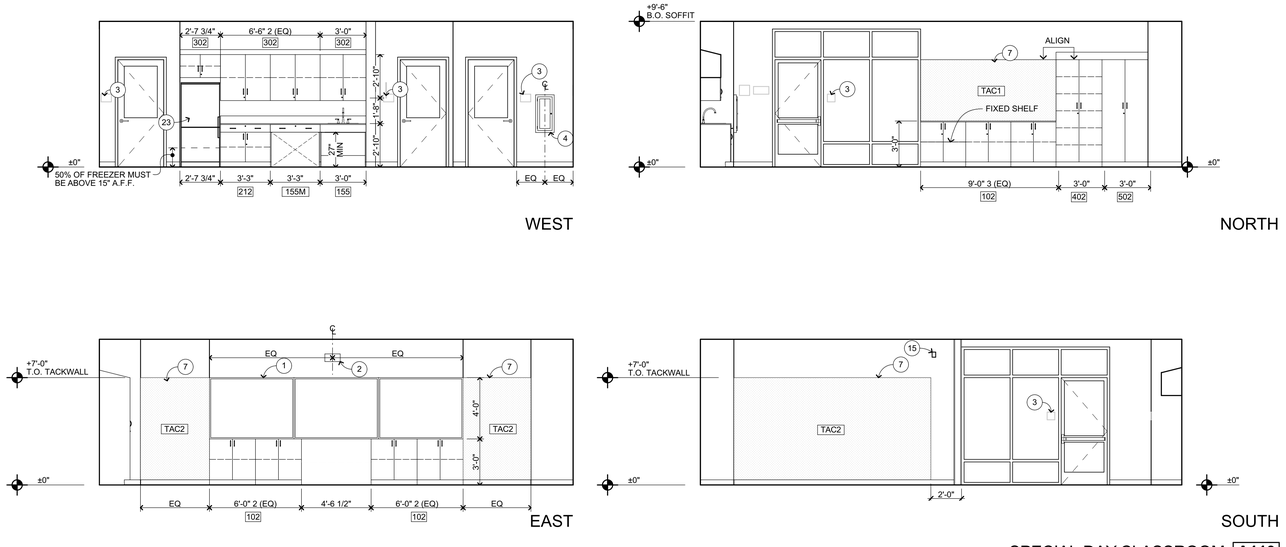

SPECIAL DAY CLASSROOM **A110**
1/4" = 1'-0" A-A2.1

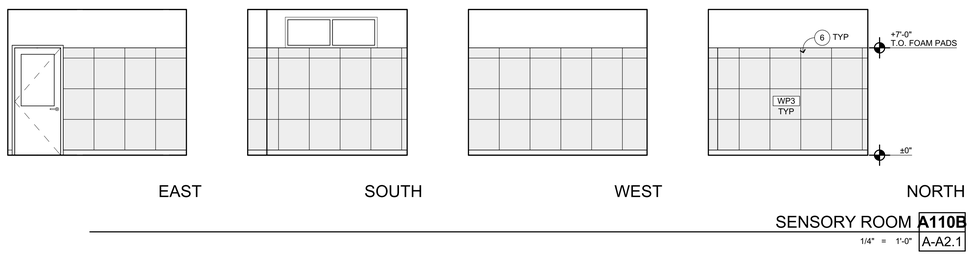

SENSORY ROOM **A110B**
1/4" = 1'-0" A-A2.1

INTERIOR ELEVATION KEYNOTES

NOT ALL KEYNOTES MAY APPLY TO THIS SHEET

1. MARKER BOARD CASEWORK
2. WALL MOUNTED SHORT THROW PROJECTOR, OFOI
3. SIGNAGE, SEE 10/A-8.1
4. SEMI-RECESSED FIRE EXTINGUISHER, SEE 23/A-9.3 SIM
5. SOLID FOLDING PARTITION W/ TACKWALL COVERING
6. FOAM WALL PADS
7. TACK-WALL, SEE FIN SCHED
8. MANUAL WINDOW SHADES, SEE 27/A-10.3
9. MECHANICAL ITEM, S.M.D.
10. EYEWASH STATION
11. FUME HOOD
12. CASEWORK, SEE 3/A-10.4
13. OPEN-SHELVING BOOKSHELVES
14. FREE STANDING STAINLESS STEEL SINKS
15. ELECTRICAL ITEM, S.E.D.
16. PLUMBING ITEM, S.P.D.
17. STRUCTURAL ITEM, S.S.D.
18. MOP SINK, S.P.D.
19. ROOF ACCESS LADDER, SEE 24/A-9.7 MTL, 25/A-9.7 WD
20. MOTORIZED WINDOW SHADES, SEE 28/A-10.3
21. TOILET PARTITION, SEE 17/A-10.3, 18/A-10.3
22. 4X8 WALL MOUNTED MARKERBOARD, SEE 34/A-10.3
23. ELECTRICAL APPLIANCE, OFCI

INTERIOR ELEVATION GENERAL NOTES

1. NOTES AND SYMBOLS ARE TO APPLY AT ALL AREAS OF SIMILAR GRAPHIC REPRESENTATION. SUCH INDICATIONS MAY BE LIMITED TO PROMOTE CLARITY OR AVOID REDUNDANCY. NO LIMITATION OF APPLICATION SHALL BE CONSTRUED WITHOUT SPECIFIC NOTATION.
2. REFER TO MECHANICAL DRAWINGS FOR REGISTERS AND VENTS NOT OTHERWISE SHOWN.
3. REFER TO ELECTRICAL DRAWINGS FOR HORNS, SPEAKERS, PULL STATIONS AND OTHER FEATURES NOT OTHERWISE SHOWN.
4. TYPICAL MOUNTING HEIGHTS OF ACCESSIBLE ELEMENTS AT ACCESSIBLE FIXTURES SEE 5/A-10.3
5. FLUSH VALVE HANDLES SHALL BE LOCATED AT THE WIDE SIDE OF ACCESSIBLE STALL.
6. FLOORING & BASE SHALL EXTEND UNDER ACCESSIBLE SINK/LAVATORY BASE CABINETS TO THE WALL. WATER SUPPLY AND DRAINPIPES ACCESSIBLE UNDER LAVATORIES SHALL BE INSULATED OR OTHERWISE COVERED. THERE SHALL BE NO SHARP OR ABRASIVE SURFACES UNDER LAVATORIES.
7. PROVIDE SOLID BLOCKING FOR CABINET, ACCESSORY, OR EQUIPMENT MOUNTING 1/A-10.3 WD FRMG, 21/A-10.3 MTL FRMG

WALL FINISH CODES

FOR OVERALL WALL AND BASE FINISHES, SEE FINISH PLANS. FOR MATERIAL INFORMATION, SEE FINISH SCHEDULE SEE SHEET A-8.3. FOR PAINT FINISHES SEE SEC. 09 9113 (EXTERIOR) & 09 9123 (INTERIOR).
ALL GYP BD TO BE TYPE 'X'.

P1 P2	PAINT	
WT1 WT2	CERAMIC WALL TILE	35/A-10.3
TAC1 TAC2	TACK WALL	9/A-10.3
AP1	ACOUSTIC PANELS	
MP1	METAL PERFORATED WALL PANELS	
WP1	FRP PANEL	
WP3	WALL FOAM PAD	
PLY1	3/4" MDO FIRE RATED PLYWOOD	

KEY PLAN

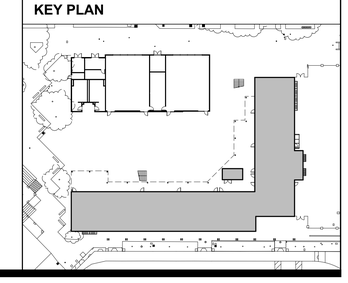

IDENTIFICATION STAMP
DIV. OF THE STATE ARCHITECT
APP: 01-119994 INC:
REVIEWED FOR
SS ☑ FLS ☑ ACS ☑
DATE: 08/16/2022

QUATTROCCHI KWOK ARCHITECTS
Main:
636 Fifth Street, Santa Rosa, CA 95404
East Bay:
55 Harrison Street, Suite 525,
Oakland, CA 94607
(707) 576-0829

LICENSED ARCHITECT
JIM THEISS
LICENSE # C22643
EXP JUNE 30, 2023
STATE OF CALIFORNIA

SIGNED: JUNE 24, 2022

LIBERTY HIGH SCHOOL

NEW CLASSROOM BUILDINGS

850 2ND STREET
BRENTWOOD, CA
94513

LIBERTY UNION HIGH SCHOOL DISTRICT

DSA APP NO. 01-119994
ARCH PROJECT NO: 1925.00
DRAWN BY: JDS
DRAWING SCALE: 1/4" = 1'-0"
PTN: 61721-83 FILE NO: 7-H4

CONSTRUCTION DOCUMENTS
JUNE 24, 2022

SHEET TITLE
INTERIOR ELEVATIONS

SHEET NUMBER
A-A7.4

BIMcloud: archiserver - BIMcloud Basic for ARCHICAD 22/1925.00 Liberty HS Classroom, BLDG A, AC22.7/27/2022.5:30 PM

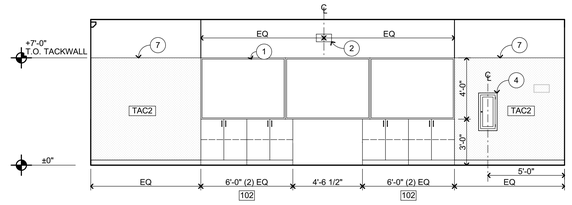

WEST

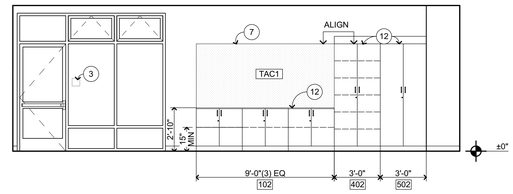

NORTH

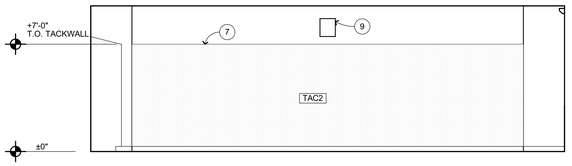

EAST

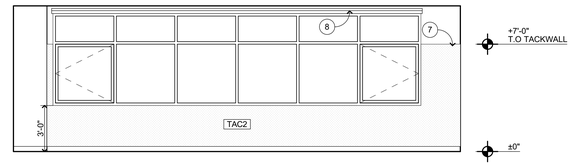

SOUTH

CLASSROOM **A111**

1/4" = 1'-0" A-A2.1

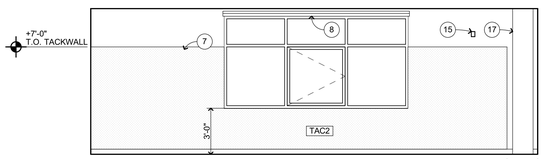

WEST

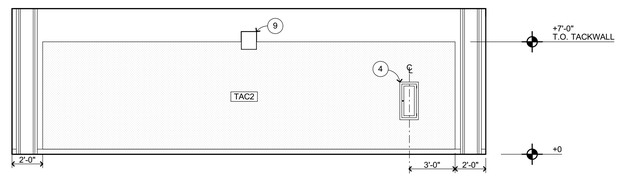

NORTH

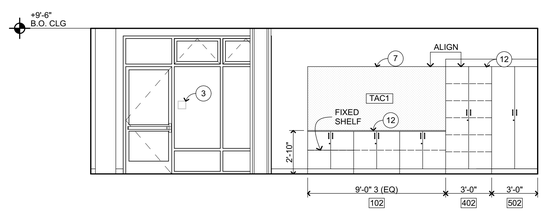

EAST

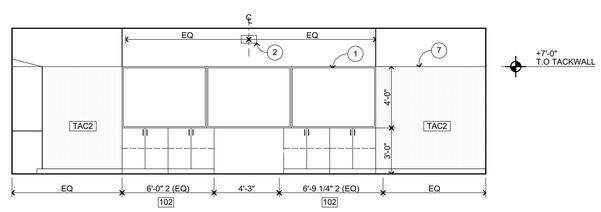

SOUTH

CLASSROOM **A201**

1/4" = 1'-0" A-A2.4

INTERIOR ELEVATION KEYNOTES

NOT ALL KEYNOTES MAY APPLY TO THIS SHEET

1. MARKER BOARD CASEWORK
2. WALL MOUNTED SHORT THROW PROJECTOR, OFOI
3. SIGNAGE, SEE 10/A-8.1
4. SEMI-RECESSED FIRE EXTINGUISHER, SEE 23/A-9.3 SIM
5. SOLID FOLDING PARTITION W/ TACKWALL COVERING
6. FOAM WALL PADS
7. TACK-WALL, SEE FIN SCHED
8. MANUAL WINDOW SHADES, SEE 27/A-10.3
9. MECHANICAL ITEM, S.M.D.
10. EYEWASH STATION
11. FUME HOOD
12. CASEWORK, SEE 3/A-10.4
13. OPEN-SHELVING BOOKSHELVES
14. FREE STANDING STAINLESS STEEL SINKS
15. ELECTRICAL ITEM, S.E.D.
16. PLUMBING ITEM, S.P.D.
17. STRUCTURAL ITEM, S.S.D.
18. MOP SINK, S.P.D.
19. ROOF ACCESS LADDER, SEE 24/A-9.7 25/A-9.7 MTL WD
20. MOTORIZED WINDOW SHADES, SEE 28/A-10.3
21. TOILET PARTITION, SEE 17/A-10.3 18/A-10.3
22. 4X8 WALL MOUNTED MARKERBOARD, SEE 34/A-10.3
23. ELECTRICAL APPLIANCE, OFCI

INTERIOR ELEVATION GENERAL NOTES

1. NOTES AND SYMBOLS ARE TO APPLY AT ALL AREAS OF SIMILAR GRAPHIC REPRESENTATION. SUCH INDICATIONS MAY BE LIMITED TO PROMOTE CLARITY OR AVOID REDUNDANCY. NO LIMITATION OF APPLICATION SHALL BE CONSTRUED WITHOUT SPECIFIC NOTATION.
2. REFER TO MECHANICAL DRAWINGS FOR REGISTERS AND VENTS NOT OTHERWISE SHOWN.
3. REFER TO ELECTRICAL DRAWINGS FOR HORNS, SPEAKERS, PULL STATIONS AND OTHER FEATURES NOT OTHERWISE SHOWN.
4. TYPICAL MOUNTING HEIGHTS OF ACCESSIBLE ELEMENTS AT ACCESSIBLE FIXTURES SEE 5/A-10.3
5. FLUSH VALVE HANDLES SHALL BE LOCATED AT THE WIDE SIDE OF ACCESSIBLE STALL.
6. FLOORING & BASE SHALL EXTEND UNDER ACCESSIBLE SINK/LAVATORY BASE CABINETS TO THE WALL. WATER SUPPLY AND DRAINPIPES ACCESSIBLE UNDER LAVATORIES SHALL BE INSULATED OR OTHERWISE COVERED. THERE SHALL BE NO SHARP OR ABRASIVE SURFACES UNDER LAVATORIES.
7. PROVIDE SOLID BLOCKING FOR CABINET, ACCESSORY, OR EQUIPMENT MOUNTING 1/A-10.3 WD FRMG 21/A-10.3 MTL FRMG

WALL FINISH CODES

FOR OVERALL WALL AND BASE FINISHES, SEE FINISH PLANS. FOR MATERIAL INFORMATION, SEE FINISH SCHEDULE SEE SHEET A-8.3. FOR PAINT FINISHES SEE SEC. 09 9113 (EXTERIOR) & 09 9123 (INTERIOR).
ALL GYP BD TO BE TYPE 'X'.

P1 P2	PAINT
WT1 WT2	CERAMIC WALL TILE 35/A-10.3
TAC1 TAC2	TACK WALL 9/A-10.3
AP1	ACOUSTIC PANELS
MP1	METAL PERFORATED WALL PANELS
WP1	FRP PANEL
WP3	WALL FOAM PAD
PLY1	3/4" MDO FIRE RATED PLYWOOD

KEY PLAN

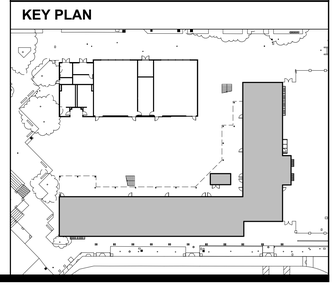

IDENTIFICATION STAMP
DIV. OF THE STATE ARCHITECT
APP: 01-119994 INC:
REVIEWED FOR
SS ☑ FLS ☑ ACS ☑
DATE: 08/16/2022

QUATTROCCHI KWOK ARCHITECTS
Main:
636 Fifth Street, Santa Rosa, CA 95404
East Bay:
55 Harrison Street, Suite 525,
Oakland, CA. 94607
(707) 576-0829

LICENSED ARCHITECT
JIM THEISS
LICENSE # C22643
EXP JUNE 30, 2023
STATE OF CALIFORNIA

SIGNED: JUNE 24, 2022

LIBERTY HIGH SCHOOL

NEW CLASSROOM BUILDINGS

850 2ND STREET
BRENTWOOD, CA
94513

LIBERTY UNION HIGH SCHOOL DISTRICT

DSA APP NO. 01-119994

ARCH PROJECT NO:	1925.00
DRAWN BY:	JDS
DRAWING SCALE:	1/4" = 1'-0"
PTN: 61721-83	FILE NO: 7-H4

CONSTRUCTION DOCUMENTS

JUNE 24, 2022

SHEET TITLE

INTERIOR ELEVATIONS

SHEET NUMBER

A-A7.5

BIMcloud: archiserver - BIMcloud Basic for ARCHICAD 22/1925.00 Liberty HS Classroom_BLDG A_AC22-7/27/2022-5:30 PM

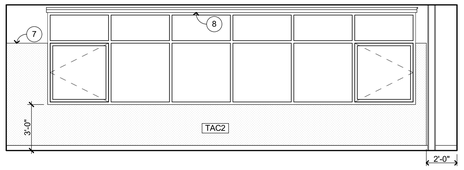

WEST

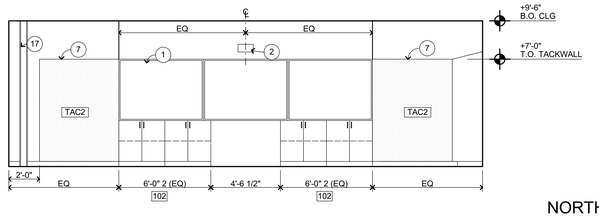

NORTH

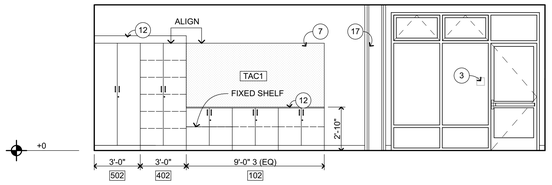

EAST

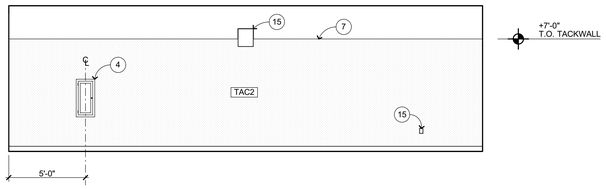

SOUTH

CLASSROOM **A202**

1/4" = 1'-0" A-A2.4

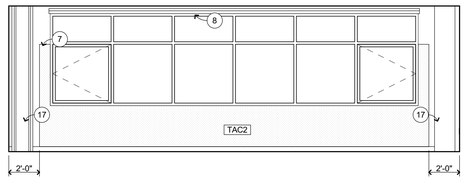

WEST

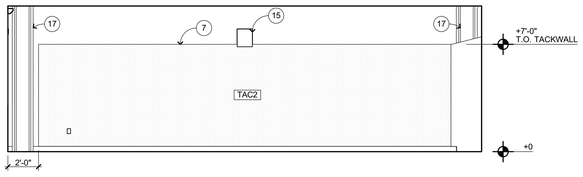

NORTH

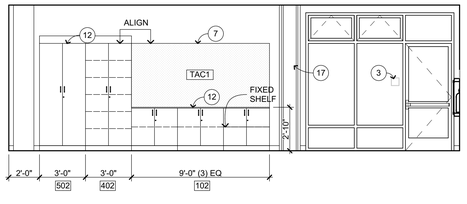

EAST

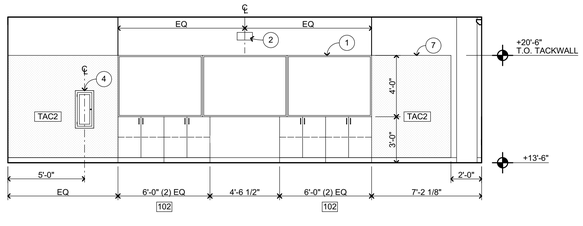

SOUTH

CLASSROOM **A203**

1/4" = 1'-0" A-A2.4

INTERIOR ELEVATION KEYNOTES

NOT ALL KEYNOTES MAY APPLY TO THIS SHEET

1. MARKER BOARD CASEWORK
2. WALL MOUNTED SHORT THROW PROJECTOR, OFOI
3. SIGNAGE, SEE 10/A-8.1
4. SEMI-RECESSED FIRE EXTINGUISHER, SEE 23/A-9.3 SIM
5. SOLID FOLDING PARTITION W/ TACKWALL COVERING
6. FOAM WALL PADS
7. TACK-WALL, SEE FIN SCHED
8. MANUAL WINDOW SHADES, SEE 27/A-10.3
9. MECHANICAL ITEM, S.M.D.
10. EYEWASH STATION
11. FUME HOOD
12. CASEWORK, SEE 3/A-10.4
13. OPEN-SHELVING BOOKSHELVES
14. FREE STANDING STAINLESS STEEL SINKS
15. ELECTRICAL ITEM, S.E.D.
16. PLUMBING ITEM, S.P.D.
17. STRUCTURAL ITEM, S.S.D.
18. MOP SINK, S.P.D.
19. ROOF ACCESS LADDER, SEE 24/A-9.7 25/A-9.7
20. MOTORIZED WINDOW SHADES, SEE 28/A-10.3 MTL WD
21. TOILET PARTITION, SEE 17/A-10.3 18/A-10.3
22. 4X8 WALL MOUNTED MARKERBOARD, SEE 34/A-10.3
23. ELECTRICAL APPLIANCE, OFCI

INTERIOR ELEVATION GENERAL NOTES

1. NOTES AND SYMBOLS ARE TO APPLY AT ALL AREAS OF SIMILAR GRAPHIC REPRESENTATION. SUCH INDICATIONS MAY BE LIMITED TO PROMOTE CLARITY OR AVOID REDUNDANCY. NO LIMITATION OF APPLICATION SHALL BE CONSTRUED WITHOUT SPECIFIC NOTATION.
2. REFER TO MECHANICAL DRAWINGS FOR REGISTERS AND VENTS NOT OTHERWISE SHOWN.
3. REFER TO ELECTRICAL DRAWINGS FOR HORNS, SPEAKERS, PULL STATIONS AND OTHER FEATURES NOT OTHERWISE SHOWN.
4. TYPICAL MOUNTING HEIGHTS OF ACCESSIBLE ELEMENTS AT ACCESSIBLE FIXTURES SEE 5/A-10.3
5. FLUSH VALVE HANDLES SHALL BE LOCATED AT THE WIDE SIDE OF ACCESSIBLE STALL.
6. FLOORING & BASE SHALL EXTEND UNDER ACCESSIBLE SINK/LAVATORY BASE CABINETS TO THE WALL. WATER SUPPLY AND DRAINPIPES ACCESSIBLE UNDER LAVATORIES SHALL BE INSULATED OR OTHERWISE COVERED. THERE SHALL BE NO SHARP OR ABRASIVE SURFACES UNDER LAVATORIES.
7. PROVIDE SOLID BLOCKING FOR CABINET, ACCESSORY, OR EQUIPMENT MOUNTING 1/A-10.3 WD FRMG 21/A-10.3 MTL FRMG

WALL FINISH CODES

FOR OVERALL WALL AND BASE FINISHES, SEE FINISH PLANS. FOR MATERIAL INFORMATION, SEE FINISH SCHEDULE SEE SHEET A-8.3. FOR PAINT FINISHES SEE SEC. 09 9113 (EXTERIOR) & 09 9123 (INTERIOR).
ALL GYP BD TO BE TYPE 'X'.

P1 P2	PAINT
WT1 WT2	CERAMIC WALL TILE 35/A-10.3
TAC1 TAC2	TACK WALL 9/A-10.3
AP1	ACOUSTIC PANELS
MP1	METAL PERFORATED WALL PANELS
WP1	FRP PANEL
WP3	WALL FOAM PAD
PLY1	3/4" MDO FIRE RATED PLYWOOD

KEY PLAN

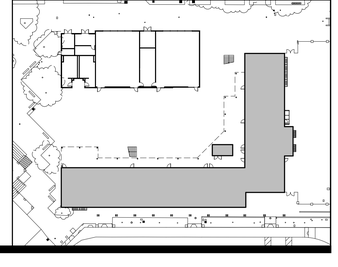

IDENTIFICATION STAMP
DIV. OF THE STATE ARCHITECT
APP: 01-119994 INC:
REVIEWED FOR
SS ☑ FLS ☑ ACS ☑
DATE: 08/16/2022

QUATTROCCHI KWOK ARCHITECTS
Main:
636 Fifth Street, Santa Rosa, CA 95404
East Bay:
55 Harrison Street, Suite 525,
Oakland, CA 94607
(707) 576-0829

LICENSED ARCHITECT
JIM THEISS
LICENSE # C22643
EXP JUNE 30, 2023
STATE OF CALIFORNIA

SIGNED: JUNE 24, 2022

LIBERTY HIGH SCHOOL

NEW CLASSROOM BUILDINGS

850 2ND STREET
BRENTWOOD, CA
94513

LIBERTY UNION HIGH SCHOOL DISTRICT

DSA APP NO. 01-119994

ARCH PROJECT NO:	1925.00
DRAWN BY:	JDS
DRAWING SCALE:	1/4" = 1'-0"
PTN: 61721-83	FILE NO: 7-H4

CONSTRUCTION DOCUMENTS

JUNE 24, 2022

SHEET TITLE

INTERIOR ELEVATIONS

SHEET NUMBER

A-A7.6

BIMcloud: archiserver - BIMcloud Basic for ARCHICAD 22/1925.00 Liberty HS Classroom BLDG A, AC22/7/27/2022/5:31 PM

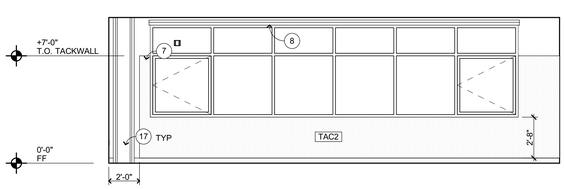

WEST

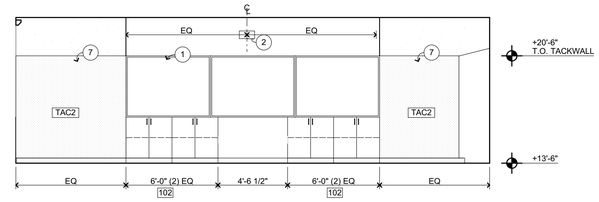

NORTH

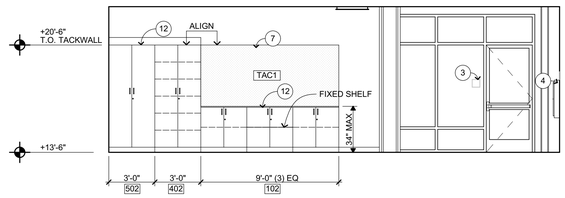

EAST

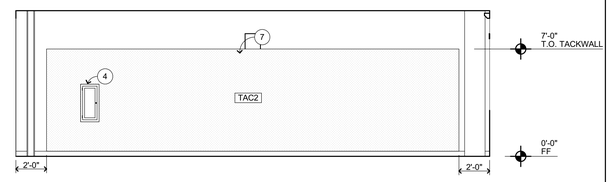

SOUTH

CLASSROOM **A204**

1/4" = 1'-0" A-A2.4

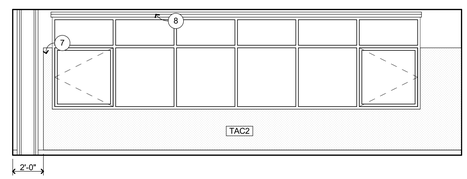

WEST

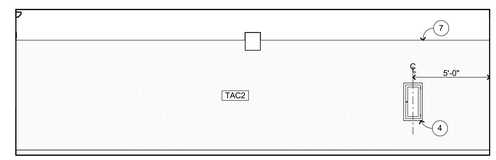

NORTH

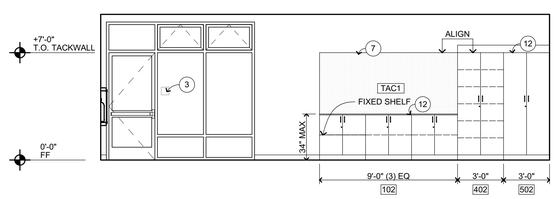

EAST

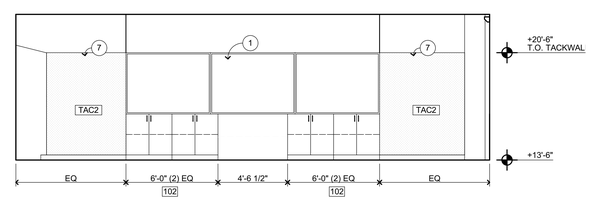

SOUTH

CLASSROOM **A205**

1/4" = 1'-0" A-A2.4

INTERIOR ELEVATION KEYNOTES

NOT ALL KEYNOTES MAY APPLY TO THIS SHEET

1. MARKER BOARD CASEWORK
2. WALL MOUNTED SHORT THROW PROJECTOR, OFOI
3. SIGNAGE, SEE 10/A-8.1
4. SEMI-RECESSED FIRE EXTINGUISHER, SEE 23/A-9.3 SIM
5. SOLID FOLDING PARTITION W/ TACKWALL COVERING
6. FOAM WALL PADS
7. TACK-WALL, SEE FIN SCHED
8. MANUAL WINDOW SHADES, SEE 27/A-10.3
9. MECHANICAL ITEM, S.M.D.
10. EYEWASH STATION
11. FUME HOOD
12. CASEWORK, SEE 3/A-10.4
13. OPEN-SHELVING BOOKSHELVES
14. FREE STANDING STAINLESS STEEL SINKS
15. ELECTRICAL ITEM, S.E.D.
16. PLUMBING ITEM, S.P.D.
17. STRUCTURAL ITEM, S.S.D.
18. MOP SINK, S.P.D.
19. ROOF ACCESS LADDER, SEE 24/A-9.7 25/A-9.7 MTL WD
20. MOTORIZED WINDOW SHADES, SEE 28/A-10.3
21. TOILET PARTITION, SEE 17/A-10.3 18/A-10.3
22. 4X8 WALL MOUNTED MARKERBOARD, SEE 34/A-10.3
23. ELECTRICAL APPLIANCE, OFCI

INTERIOR ELEVATION GENERAL NOTES

1. NOTES AND SYMBOLS ARE TO APPLY AT ALL AREAS OF SIMILAR GRAPHIC REPRESENTATION. SUCH INDICATIONS MAY BE LIMITED TO PROMOTE CLARITY OR AVOID REDUNDANCY. NO LIMITATION OF APPLICATION SHALL BE CONSTRUED WITHOUT SPECIFIC NOTATION.
2. REFER TO MECHANICAL DRAWINGS FOR REGISTERS AND VENTS NOT OTHERWISE SHOWN.
3. REFER TO ELECTRICAL DRAWINGS FOR HORNS, SPEAKERS, PULL STATIONS AND OTHER FEATURES NOT OTHERWISE SHOWN.
4. TYPICAL MOUNTING HEIGHTS OF ACCESSIBLE ELEMENTS AT ACCESSIBLE FIXTURES SEE 5/A-10.3
5. FLUSH VALVE HANDLES SHALL BE LOCATED AT THE WIDE SIDE OF ACCESSIBLE STALL.
6. FLOORING & BASE SHALL EXTEND UNDER ACCESSIBLE SINK/LAVATORY BASE CABINETS TO THE WALL. WATER SUPPLY AND DRAINPIPES ACCESSIBLE UNDER LAVATORIES SHALL BE INSULATED OR OTHERWISE COVERED. THERE SHALL BE NO SHARP OR ABRASIVE SURFACES UNDER LAVATORIES.
7. PROVIDE SOLID BLOCKING FOR CABINET, ACCESSORY, OR EQUIPMENT MOUNTING 1/A-10.3 WD FRMG 21/A-10.3 MTL FRMG

WALL FINISH CODES

FOR OVERALL WALL AND BASE FINISHES, SEE FINISH PLANS. FOR MATERIAL INFORMATION, SEE FINISH SCHEDULE SEE SHEET A-8.3. FOR PAINT FINISHES SEE SEC. 09 9113 (EXTERIOR) & 09 9123 (INTERIOR).
ALL GYP BD TO BE TYPE 'X'.

P1 P2	PAINT
WT1 WT2	CERAMIC WALL TILE 35/A-10.3
TAC1 TAC2	TACK WALL 9/A-10.3
AP1	ACOUSTIC PANELS
MP1	METAL PERFORATED WALL PANELS
WP1	FRP PANEL
WP3	WALL FOAM PAD
PLY1	3/4" MDO FIRE RATED PLYWOOD

KEY PLAN

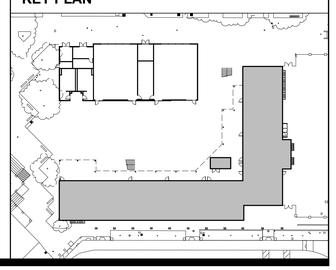

IDENTIFICATION STAMP
DIV. OF THE STATE ARCHITECT
APP: 01-119994 INC:
REVIEWED FOR
SS ☑ FLS ☑ ACS ☑
DATE: 08/16/2022

QUATTROCCHI KWOK ARCHITECTS
Main:
636 Fifth Street, Santa Rosa, CA 95404
East Bay:
55 Harrison Street, Suite 525,
Oakland, CA 94607
(707) 576-0329

LICENSED ARCHITECT
JIM THEISS
LICENSE # C22643
EXP JUNE 30, 2023
STATE OF CALIFORNIA

SIGNED: JUNE 24, 2022

LIBERTY HIGH SCHOOL

NEW CLASSROOM BUILDINGS

850 2ND STREET
BRENTWOOD, CA
94513

LIBERTY UNION HIGH SCHOOL DISTRICT

DSA APP NO. 01-119994

ARCH PROJECT NO:	1925.00
DRAWN BY:	JDS
DRAWING SCALE:	1/4" = 1'-0"
PTN: 61721-83	FILE NO: 7-H4

CONSTRUCTION DOCUMENTS

JUNE 24, 2022

SHEET TITLE

INTERIOR ELEVATIONS

SHEET NUMBER

A-A7.7

BIMcloud: archiserver - BIMcloud Basic for ARCHICAD 22/1925.00 Liberty HS Classroom_BLDG A_AC22.7/27/2022.5:31 PM

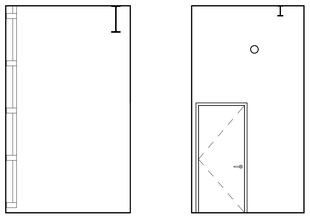

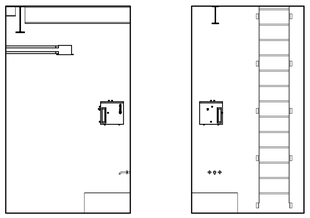

CUSTODIAN **A207**

1/4" = 1'-0" A-A2.4

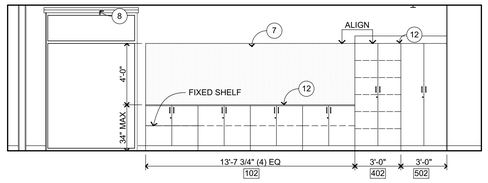

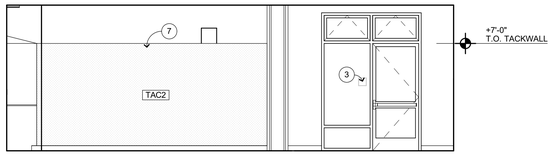

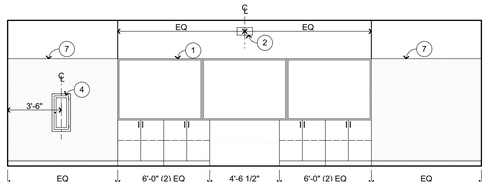

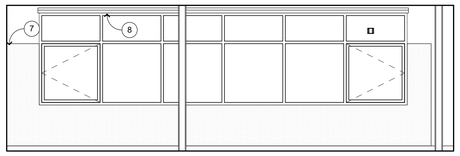

CLASSROOM **A206**

1/4" = 1'-0" A-A2.4

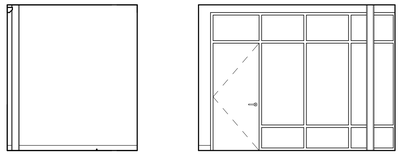

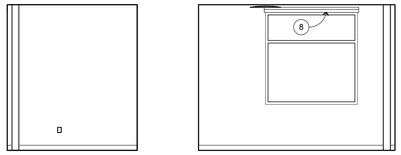

FLEXIBLE OFFICE **A208B**

1/4" = 1'-0" A-A2.4

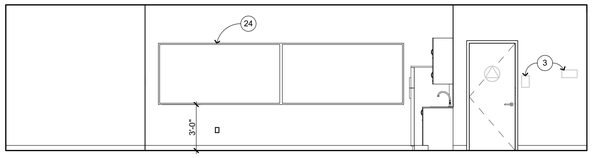

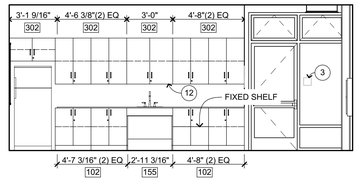

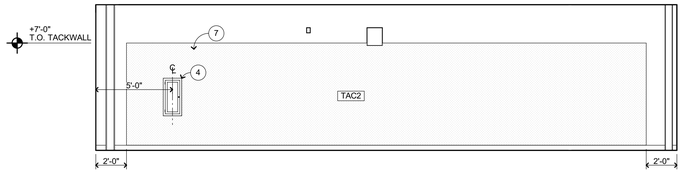

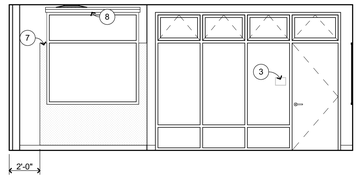

STAFF BREAK ROOM **A208**

1/4" = 1'-0" A-A2.4

INTERIOR ELEVATION KEYNOTES

NOT ALL KEYNOTES MAY APPLY TO THIS SHEET

1. MARKER BOARD CASEWORK
2. WALL MOUNTED SHORT THROW PROJECTOR, OFOI
3. SIGNAGE, SEE 10/A-8.1
4. SEMI-RECESSED FIRE EXTINGUISHER, SEE 23/A-9.3 SIM
5. SOLID FOLDING PARTITION W/ TACKWALL COVERING
6. FOAM WALL PADS
7. TACK-WALL, SEE FIN SCHED
8. MANUAL WINDOW SHADES, SEE 27/A-10.3
9. MECHANICAL ITEM, S.M.D.
10. EYEWASH STATION
11. FUME HOOD
12. CASEWORK, SEE 3/A-10.4
13. OPEN-SHELVING BOOKSHELVES
14. FREE STANDING STAINLESS STEEL SINKS
15. ELECTRICAL ITEM, S.E.D.
16. PLUMBING ITEM, S.P.D.
17. STRUCTURAL ITEM, S.S.D.
18. MOP SINK, S.P.D.
19. ROOF ACCESS LADDER, SEE 24/A-9.7 MTL 25/A-9.7 WD
20. MOTORIZED WINDOW SHADES, SEE 28/A-10.3
21. TOILET PARTITION, SEE 17/A-10.3 18/A-10.3
22. 4X8 WALL MOUNTED MARKERBOARD, SEE 34/A-10.3
23. ELECTRICAL APPLIANCE, OFCI

INTERIOR ELEVATION GENERAL NOTES

1. NOTES AND SYMBOLS ARE TO APPLY AT ALL AREAS OF SIMILAR GRAPHIC REPRESENTATION. SUCH INDICATIONS MAY BE LIMITED TO PROMOTE CLARITY OR AVOID REDUNDANCY. NO LIMITATION OF APPLICATION SHALL BE CONSTRUED WITHOUT SPECIFIC NOTATION.
2. REFER TO MECHANICAL DRAWINGS FOR REGISTERS AND VENTS NOT OTHERWISE SHOWN.
3. REFER TO ELECTRICAL DRAWINGS FOR HORNS, SPEAKERS, PULL STATIONS AND OTHER FEATURES NOT OTHERWISE SHOWN.
4. TYPICAL MOUNTING HEIGHTS OF ACCESSIBLE ELEMENTS AT ACCESSIBLE FIXTURES SEE 5/A-10.3
5. FLUSH VALVE HANDLES SHALL BE LOCATED AT THE WIDE SIDE OF ACCESSIBLE STALL.
6. FLOORING & BASE SHALL EXTEND UNDER ACCESSIBLE SINK/LAVATORY BASE CABINETS TO THE WALL. WATER SUPPLY AND DRAINPIPES ACCESSIBLE UNDER LAVATORIES SHALL BE INSULATED OR OTHERWISE COVERED. THERE SHALL BE NO SHARP OR ABRASIVE SURFACES UNDER LAVATORIES.
7. PROVIDE SOLID BLOCKING FOR CABINET, ACCESSORY, OR EQUIPMENT MOUNTING 1/A-10.3 WD FRMG 21/A-10.3 MTL FRMG

WALL FINISH CODES

FOR OVERALL WALL AND BASE FINISHES, SEE FINISH PLANS. FOR MATERIAL INFORMATION, SEE FINISH SCHEDULE SEE SHEET A-8.3. FOR PAINT FINISHES SEE SEC. 09 9113 (EXTERIOR) & 09 9123 (INTERIOR).
ALL GYP BD TO BE TYPE 'X'.

P1 P2	PAINT
WT1 WT2	CERAMIC WALL TILE 35/A-10.3
TAC1 TAC2	TACK WALL 9/A-10.3
AP1	ACOUSTIC PANELS
MP1	METAL PERFORATED WALL PANELS
WP1	FRP PANEL
WP3	WALL FOAM PAD
PLY1	3/4" MDO FIRE RATED PLYWOOD

KEY PLAN

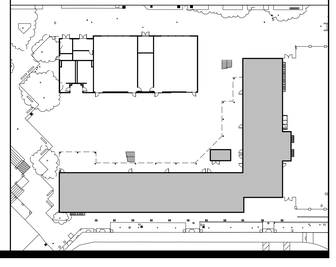

IDENTIFICATION STAMP
DIV. OF THE STATE ARCHITECT
APP: 01-119994 INC:
REVIEWED FOR
SS ☑ FLS ☑ ACS ☑
DATE: 08/16/2022

QUATTROCCHI KWOK ARCHITECTS
Main:
636 Fifth Street, Santa Rosa, CA 95404
East Bay:
55 Harrison Street, Suite 525,
Oakland, CA 94607
(707) 576-0829

LICENSED ARCHITECT
JIM THEISS
LICENSE # C22643
EXP JUNE 30, 2023
STATE OF CALIFORNIA

SIGNED: JUNE 24, 2022

LIBERTY HIGH SCHOOL

NEW CLASSROOM BUILDINGS

850 2ND STREET
BRENTWOOD, CA
94513

LIBERTY UNION HIGH SCHOOL DISTRICT

DSA APP NO. 01-119994

ARCH PROJECT NO:	1925.00
DRAWN BY:	JDS
DRAWING SCALE:	1/4" = 1'-0"
PTN: 61721-83	FILE NO: 7-H4

CONSTRUCTION DOCUMENTS

JUNE 24, 2022

SHEET TITLE

INTERIOR ELEVATIONS

SHEET NUMBER

A-A7.8

BIMcloud: archiserver - BIMcloud Basic for ARCHICAD 22/1925.00 Liberty HS Classroom_BLDG A_AC22:7/27/2022 5:31 PM

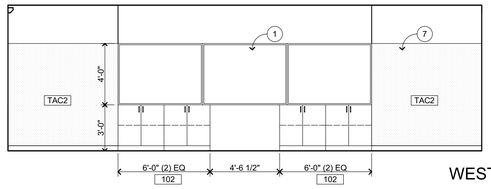

WEST

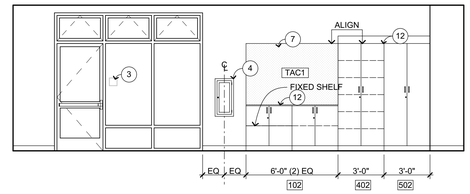

NORTH

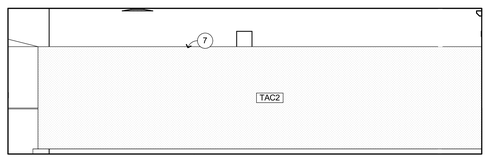

EAST

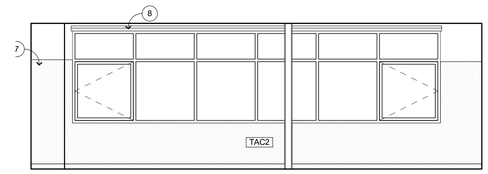

SOUTH

CLASSROOM **A209**

1/4" = 1'-0" A-A2.4

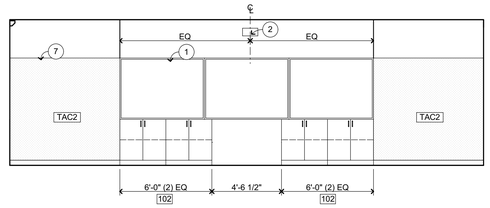

WEST

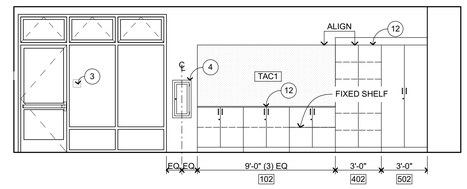

NORTH

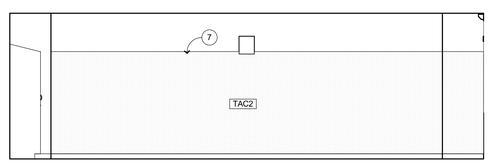

EAST

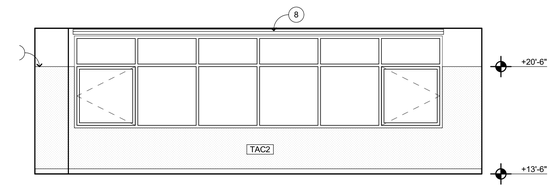

SOUTH

CLASSROOM **A210**

1/4" = 1'-0" A-A2.4

INTERIOR ELEVATION KEYNOTES

NOT ALL KEYNOTES MAY APPLY TO THIS SHEET

1. MARKER BOARD CASEWORK
2. WALL MOUNTED SHORT THROW PROJECTOR, OFOI
3. SIGNAGE, SEE 10/A-8.1
4. SEMI-RECESSED FIRE EXTINGUISHER, SEE 23/A-9.3 SIM
5. SOLID FOLDING PARTITION W/ TACKWALL COVERING
6. FOAM WALL PADS
7. TACK-WALL, SEE FIN SCHED
8. MANUAL WINDOW SHADES, SEE 27/A-10.3
9. MECHANICAL ITEM, S.M.D.
10. EYEWASH STATION
11. FUME HOOD
12. CASEWORK, SEE 3/A-10.4
13. OPEN-SHELVING BOOKSHELVES
14. FREE STANDING STAINLESS STEEL SINKS
15. ELECTRICAL ITEM, S.E.D.
16. PLUMBING ITEM, S.P.D.
17. STRUCTURAL ITEM, S.S.D.
18. MOP SINK, S.P.D.
19. ROOF ACCESS LADDER, SEE 24/A-9.7 25/A-9.7
20. MOTORIZED WINDOW SHADES, SEE 28/A-10.3 MTL WD
21. TOILET PARTITION, SEE 17/A-10.3 18/A-10.3
22. 4X8 WALL MOUNTED MARKERBOARD, SEE 34/A-10.3
23. ELECTRICAL APPLIANCE, OFCI

INTERIOR ELEVATION GENERAL NOTES

1. NOTES AND SYMBOLS ARE TO APPLY AT ALL AREAS OF SIMILAR GRAPHIC REPRESENTATION. SUCH INDICATIONS MAY BE LIMITED TO PROMOTE CLARITY OR AVOID REDUNDANCY. NO LIMITATION OF APPLICATION SHALL BE CONSTRUED WITHOUT SPECIFIC NOTATION.
2. REFER TO MECHANICAL DRAWINGS FOR REGISTERS AND VENTS NOT OTHERWISE SHOWN.
3. REFER TO ELECTRICAL DRAWINGS FOR HORNS, SPEAKERS, PULL STATIONS AND OTHER FEATURES NOT OTHERWISE SHOWN.
4. TYPICAL MOUNTING HEIGHTS OF ACCESSIBLE ELEMENTS AT ACCESSIBLE FIXTURES SEE 5/A-10.3
5. FLUSH VALVE HANDLES SHALL BE LOCATED AT THE WIDE SIDE OF ACCESSIBLE STALL.
6. FLOORING & BASE SHALL EXTEND UNDER ACCESSIBLE SINK/LAVATORY BASE CABINETS TO THE WALL. WATER SUPPLY AND DRAINPIPES ACCESSIBLE UNDER LAVATORIES SHALL BE INSULATED OR OTHERWISE COVERED. THERE SHALL BE NO SHARP OR ABRASIVE SURFACES UNDER LAVATORIES.
7. PROVIDE SOLID BLOCKING FOR CABINET, ACCESSORY, OR EQUIPMENT MOUNTING 1/A-10.3 WD FRMG 21/A-10.3 MTL FRMG

WALL FINISH CODES

FOR OVERALL WALL AND BASE FINISHES, SEE FINISH PLANS. FOR MATERIAL INFORMATION, SEE FINISH SCHEDULE SEE SHEET A-8.3. FOR PAINT FINISHES SEE SEC. 09 9113 (EXTERIOR) & 09 9123 (INTERIOR). ALL GYP BD TO BE TYPE 'X'.

P1 P2	PAINT
WT1 WT2	CERAMIC WALL TILE 35/A-10.3
TAC1 TAC2	TACK WALL 9/A-10.3
AP1	ACOUSTIC PANELS
MP1	METAL PERFORATED WALL PANELS
WP1	FRP PANEL
WP3	WALL FOAM PAD
PLY1	3/4" MDO FIRE RATED PLYWOOD

KEY PLAN

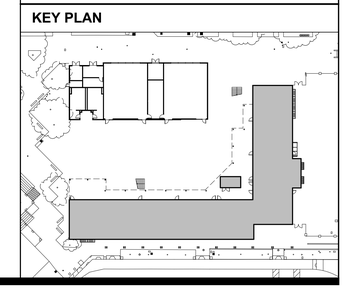

IDENTIFICATION STAMP
DIV. OF THE STATE ARCHITECT
APP: 01-119994 INC:
REVIEWED FOR
SS ☑ FLS ☑ ACS ☑
DATE: 08/16/2022

QUATTROCCHI KWOK ARCHITECTS
Main:
636 Fifth Street, Santa Rosa, CA 95404
East Bay:
55 Harrison Street, Suite 525,
Oakland, CA 94607
(707) 576-0829

LICENSED ARCHITECT
JIM THEISS
LICENSE # C22643
EXP JUNE 30, 2023
STATE OF CALIFORNIA
SIGNED: JUNE 24, 2022

LIBERTY HIGH SCHOOL

NEW CLASSROOM BUILDINGS

850 2ND STREET
BRENTWOOD, CA
94513

LIBERTY UNION HIGH SCHOOL DISTRICT

DSA APP NO. 01-119994

ARCH PROJECT NO:	1925.00
DRAWN BY:	JDS
DRAWING SCALE:	1/4" = 1'-0"
PTN: 61721-83	FILE NO: 7-H4

CONSTRUCTION DOCUMENTS

JUNE 24, 2022

SHEET TITLE

INTERIOR ELEVATIONS

SHEET NUMBER

A-A7.9

BIMcloud: archiserver - BIMcloud Basic for ARCHICAD 22/1925.00 Liberty HS Classroom, BLDG A, AC22 7/27/2022 5:31 PM

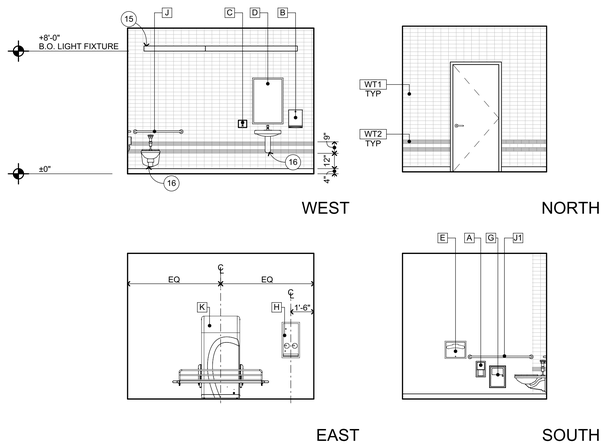

TOILET **A110A**

1/4" = 1'-0" A-A2.1

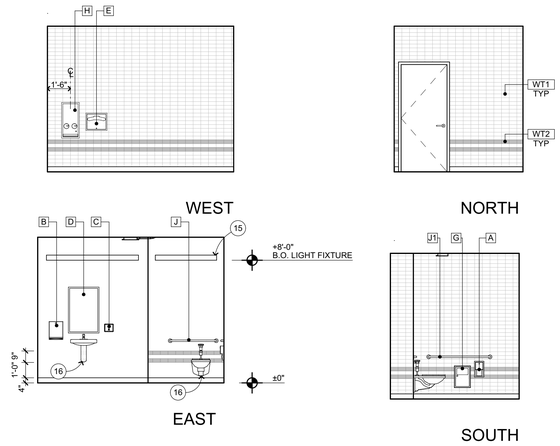

TOILET **A106A**

1/4" = 1'-0" A-A2.1

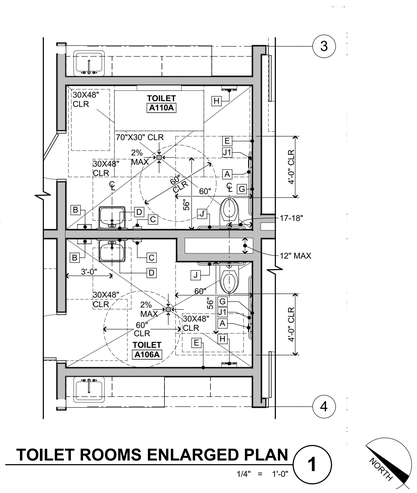

TOILET ROOMS ENLARGED PLAN 1

1/4" = 1'-0"

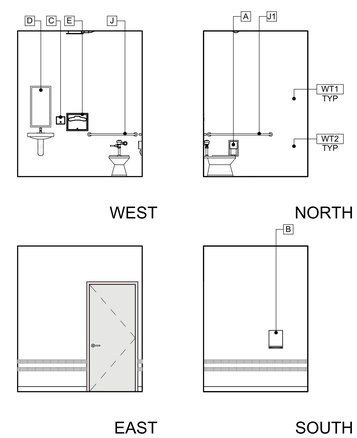

TOILET **A208A**

1/4" = 1'-0" A-A2.4

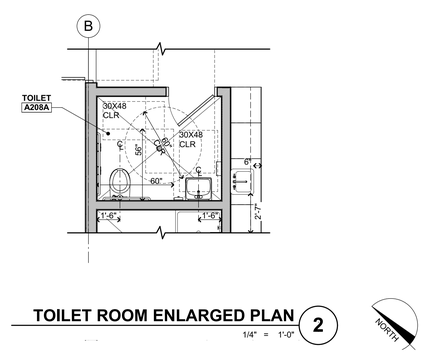

TOILET ROOM ENLARGED PLAN 2

1/4" = 1'-0"

INTERIOR ELEVATION KEYNOTES

NOT ALL KEYNOTES MAY APPLY TO THIS SHEET

1. MARKER BOARD CASEWORK
2. WALL MOUNTED SHORT THROW PROJECTOR, OFOI
3. SIGNAGE, SEE 10/A-8.1
4. SEMI-RECESSED FIRE EXTINGUISHER, SEE 23/A-9.3 SIM
5. SOLID FOLDING PARTITION W/ TACKWALL COVERING
6. FOAM WALL PADS
7. TACK-WALL, SEE FIN SCHED
8. MANUAL WINDOW SHADES, SEE 27/A-10.3
9. MECHANICAL ITEM, S.M.D.
10. EYEWASH STATION
11. FUME HOOD
12. CASEWORK, SEE 3/A-10.4
13. OPEN-SHELVING BOOKSHELVES
14. FREE STANDING STAINLESS STEEL SINKS
15. ELECTRICAL ITEM, S.E.D.
16. PLUMBING ITEM, S.P.D.
17. STRUCTURAL ITEM, S.S.D.
18. MOP SINK, S.P.D.
19. ROOF ACCESS LADDER, SEE 24/A-9.7 25/A-9.7 MTL WD
20. MOTORIZED WINDOW SHADES, SEE 28/A-10.3
21. TOILET PARTITION, SEE 17/A-10.3 18/A-10.3
22. 4X8 WALL MOUNTED MARKERBOARD, SEE 34/A-10.3
23. ELECTRICAL APPLIANCE, OFCI

INTERIOR ELEVATION GENERAL NOTES

1. NOTES AND SYMBOLS ARE TO APPLY AT ALL AREAS OF SIMILAR GRAPHIC REPRESENTATION. SUCH INDICATIONS MAY BE LIMITED TO PROMOTE CLARITY OR AVOID REDUNDANCY. NO LIMITATION OF APPLICATION SHALL BE CONSTRUED WITHOUT SPECIFIC NOTATION.
2. REFER TO MECHANICAL DRAWINGS FOR REGISTERS AND VENTS NOT OTHERWISE SHOWN.
3. REFER TO ELECTRICAL DRAWINGS FOR HORNS, SPEAKERS, PULL STATIONS AND OTHER FEATURES NOT OTHERWISE SHOWN.
4. TYPICAL MOUNTING HEIGHTS OF ACCESSIBLE ELEMENTS AT ACCESSIBLE FIXTURES SEE 5/A-10.3
5. FLUSH VALVE HANDLES SHALL BE LOCATED AT THE WIDE SIDE OF ACCESSIBLE STALL.
6. FLOORING & BASE SHALL EXTEND UNDER ACCESSIBLE SINK/LAVATORY BASE CABINETS TO THE WALL. WATER SUPPLY AND DRAINPIPES ACCESSIBLE UNDER LAVATORIES SHALL BE INSULATED OR OTHERWISE COVERED. THERE SHALL BE NO SHARP OR ABRASIVE SURFACES UNDER LAVATORIES.
7. PROVIDE SOLID BLOCKING FOR CABINET, ACCESSORY, OR EQUIPMENT MOUNTING 1/A-10.3 WD FRMG 21/A-10.3 MTL FRMG

WALL FINISH CODES

FOR OVERALL WALL AND BASE FINISHES, SEE FINISH PLANS. FOR MATERIAL INFORMATION, SEE FINISH SCHEDULE SEE SHEET A-8.3. FOR PAINT FINISHES SEE SEC. 09 9113 (EXTERIOR) & 09 9123 (INTERIOR).
ALL GYP BD TO BE TYPE 'X'.

P1 P2	PAINT
WT1 WT2	CERAMIC WALL TILE 35/A-10.3
TAC1 TAC2	TACK WALL 9/A-10.3
AP1	ACOUSTIC PANELS
MP1	METAL PERFORATED WALL PANELS
WP1	FRP PANEL
WP3	WALL FOAM PAD
PLY1	3/4" MDO FIRE RATED PLYWOOD

TOILET ROOM ACCESSORY SCHEDULE

A	TOILET PAPER DISPENSER, RECESSED (3" MAXIMUM PROJECTION)
B	PAPER TOWEL DISPENSER, RECESSED
C	SOAP DISPENSER, SURFACE MOUNTED
D	MIRROR (TYP), FOR ATTACHMENT SEE 12/A-10.3 WD FRMG 22/A-10.3 MTL FRMG
E	TOILET SEAT COVER DISPENSER, RECESSED
F	ELECTRIC HAND DRYER, SURFACE MOUNTED
G	SANITARY NAPKIN RECEPTACLE, RECESSED (3" MAXIMUM PROJECTION)
H	SANITARY NAPKIN DISPENSER, RECESSED (3" MAXIMUM PROJECTION)
J	36" GRAB BAR, FOR ATTACHMENT SEE 6/A-10.3 WD FRMG 26/A-10.3 MTL FRMG
J1	48" GRAB BAR, FOR ATTACHMENT SEE
K	ACCESSIBLE CHANGING TABLE

KEY PLAN

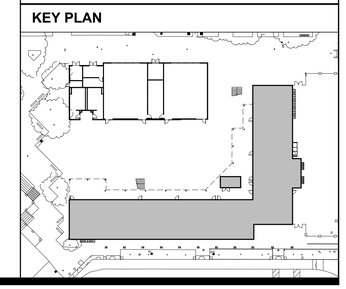

IDENTIFICATION STAMP
DIV. OF THE STATE ARCHITECT
APP: 01-119994 INC:
REVIEWED FOR
SS ☑ FLS ☑ ACS ☑
DATE: 08/16/2022

QUATTROCCHI KWOK ARCHITECTS
Main:
636 Fifth Street, Santa Rosa, CA 95404
East Bay:
55 Harrison Street, Suite 525,
Oakland, CA 94607
(707) 576-0829

LICENSED ARCHITECT
JIM THEISS
LICENSE # C22643
EXP JUNE 30, 2023
STATE OF CALIFORNIA

SIGNED: JUNE 24, 2022

LIBERTY HIGH SCHOOL

NEW CLASSROOM BUILDINGS

850 2ND STREET
BRENTWOOD, CA
94513

LIBERTY UNION HIGH SCHOOL DISTRICT

DSA APP NO. 01-119994

ARCH PROJECT NO:	1925.00
DRAWN BY:	JDS
DRAWING SCALE:	1/4" = 1'-0"
PTN: 61721-83	FILE NO: 7-H4

CONSTRUCTION DOCUMENTS

JUNE 24, 2022

SHEET TITLE

BLDG A - RESTROOM PLANS AND INTERIOR ELEVATIONS

SHEET NUMBER

A-A7.10

BIMcloud: archiserver - BIMcloud Basic for ARCHICAD 22/1925.00 Liberty HS Classroom_BLDG A_AC22.7/27/2022 5:32 PM

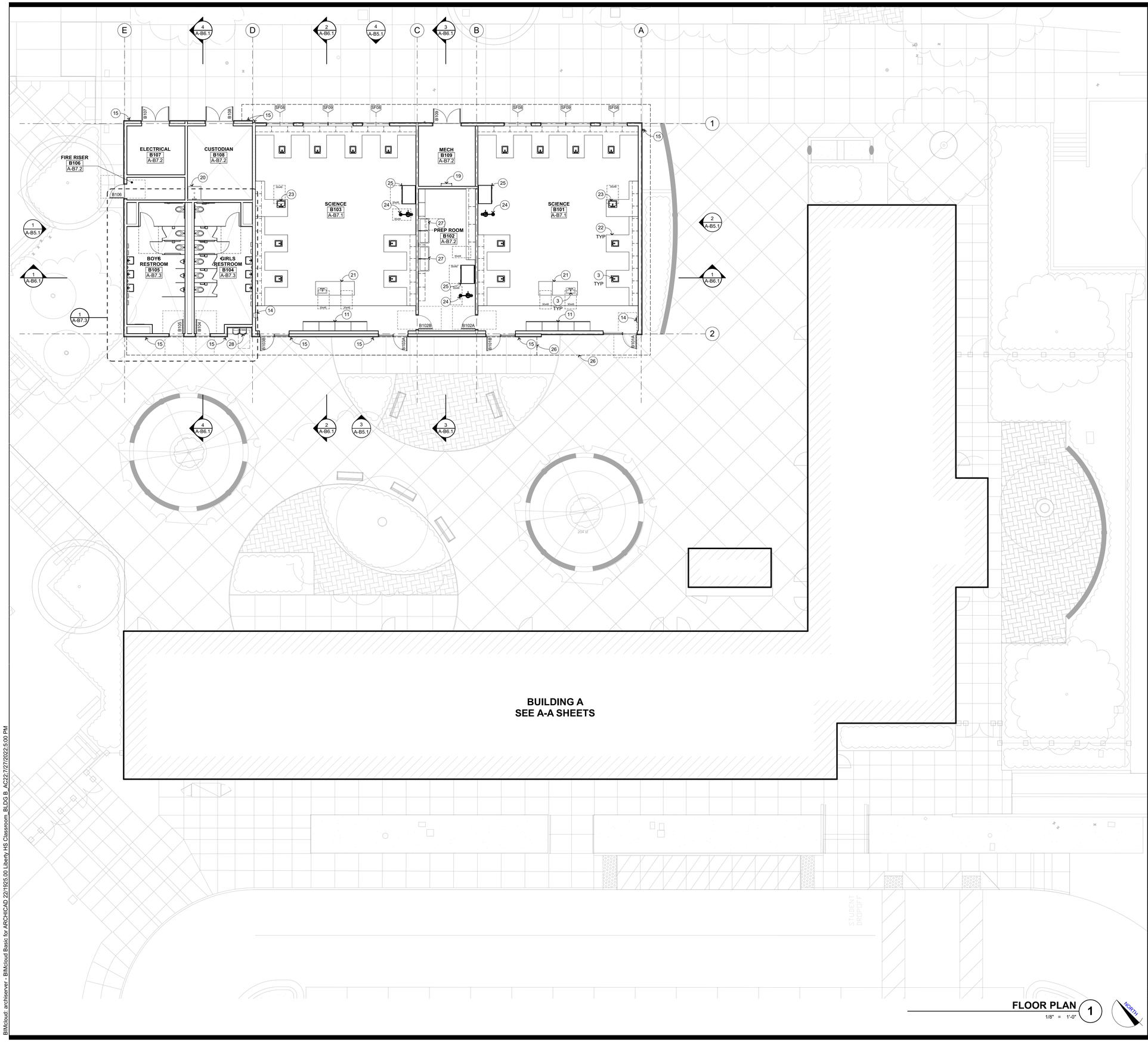

FLOOR PLAN 1
1/8" = 1'-0"

FLOOR PLAN KEYNOTES

NOT ALL KEYNOTES MAY APPLY TO THIS SHEET

1. FIRE SPRINKLER RISER, S.P.D.
2. MECHANICAL ITEM, S.M.D.
3. PLUMBING ITEM / FIXTURE, S.P.D.
4. ELECTRICAL ITEM, S.E.D.
5. STRUCTURAL ITEM, S.S.D.
6. INTEGRATED RAIN CANOPY ABOVE
7. SHADE STRUCTURE ABOVE
8. MANUAL WINDOW SHADES, SEE 13/A-9.4
9. FOLDING PANEL PARTITION
10. ACCESSIBLE BASE CABINET W/ SINK
11. CUSTOM CASEWORK W/ MARKERBOARD, SEE 2/A-10.5
12. CASEWORK, SEE 3/A-10.4
13. BASE CABINETS W/ COUNTERTOP
14. RECESSED FIRE EXTINGUISHER CABINET, SEE 13/A-10.3 SIM
15. RAINWATER LEADER, SEE 9/A-9.8
16. INTEGRATED WALK-OFF CARPET, SEE FINISH PLANS
17. SECOND LEVEL DECK OVERHEAD
18. PERFORATED METAL SIGANGE, SEE 22/A-9.8
19. ROOF ACCESS LADDER, SEE 24/A-9.7 MTL, 25/A-9.7 WD
20. MOP SINK
21. TEACHER'S DEMONSTRATION TABLE, SEE 18/A-10.4
22. EPOXY RESIN, SCIENCE LAB STATION W/ SINK AND GAS BURNER
23. ACCESSIBLE HEIGHT SCIENCE LAB STATION
24. EMERGENCY EYEWASH STATION, S.P.D.
25. FUME HOOD, S.M.D.
26. ROOF LINE ABOVE
27. FREESTANDING SS SINK, S.P.D.
28. ACCESSIBLE HI-LO DRINKING FOUNTAIN W/ BOTTLE FILLER, SEE 2/A-10.3, 7/A-10.3
29. WASHER/DRYER ALL-IN-ONE COMBO, OFCI. PER CBC 11B-611
30. REFRIGERATOR W/ BOTTOM FREEZER, OFCI. PER CBC 11B-804.6.6
31. ELECTRIC OVEN RANGE WITH FRONT CONTROLS , OFCI. PER CBC 11B-804.6.4
32. 4x8' WALL MOUNTED MARKBOARD, SEE 34/A-10.3

WALL TYPE LEGEND

WD FRAMING: 6" STUDS, TYP U.O.N.
MTL FRAMING: 6" STUDS, TYP U.O.N.

- EXT WALL MTL FRMG W/ CEM PL O/ INSUL BD, SEE 4/A-9.1
- INT WALL MTL FRMG W/ GYP BD ON EA SIDE, SEE 22/A-9.1
- INT FURRING WALL MTL FRMG 22/A-9.1 SIM
- METAL FRAMING - 1 HOUR RATED 21/A-9.1
- EXT WALL WD FRMG W/ CEM PL O/ INSUL BD, SEE 4/A-9.2
- INT WALL WD FRMG W/ GYP BD ON EA SIDE, SEE 24/A-9.2
- INT FURRING WALL WD FRMG 24/A-9.2 SIM
- WD FRAMING - 1 HOUR RATED 23/A-9.2
- 6" METAL STUD SIZE, 6" U.O.N.
- 45 ACOUSTIC RATING (STC), SEE 28/A-9.3
- B101A DOOR A IN ROOM NUMBER 101 IN BUILDING B ACCESSIBLE CLEARANCES SHOWN DASHED SEE 2/A-8.1
- W03 WINDOW NUMBER 03

KEY PLAN

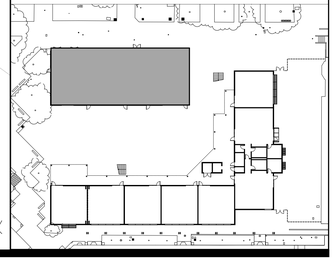

IDENTIFICATION STAMP
DIV. OF THE STATE ARCHITECT
APP: 01-119994 INC:
REVIEWED FOR
SS ☑ FLS ☑ ACS ☑
DATE: 08/16/2022

QUATTROCCHI KWOK ARCHITECTS
Main:
636 Fifth Street, Santa Rosa, CA 95404
East Bay:
55 Harrison Street, Suite 525,
Oakland, CA 94607
(707) 576-0829

LICENSED ARCHITECT
JIM THEISS
LICENSE # C22643
EXP JUNE 30, 2023
STATE OF CALIFORNIA

SIGNED: JUNE 24, 2022

LIBERTY HIGH SCHOOL

NEW CLASSROOM BUILDINGS

850 2ND STREET
BRENTWOOD, CA
94513

LIBERTY UNION HIGH SCHOOL DISTRICT

DSA APP NO. 01-119994

ARCH PROJECT NO:	1925.00
DRAWN BY:	HD
DRAWING SCALE:	1/8" = 1'-0"
PTN: 61721-83	FILE NO: 7-H4

CONSTRUCTION DOCUMENTS

JUNE 24, 2022

SHEET TITLE

BLDG B - FLOOR PLAN

SHEET NUMBER

A-B2.1

BIMcloud: archiserver - BIMcloud Basic for ARCHICAD 22/1925.00 Liberty HS Classroom_BLDG B_AC22.7/27/2022:5:00 PM

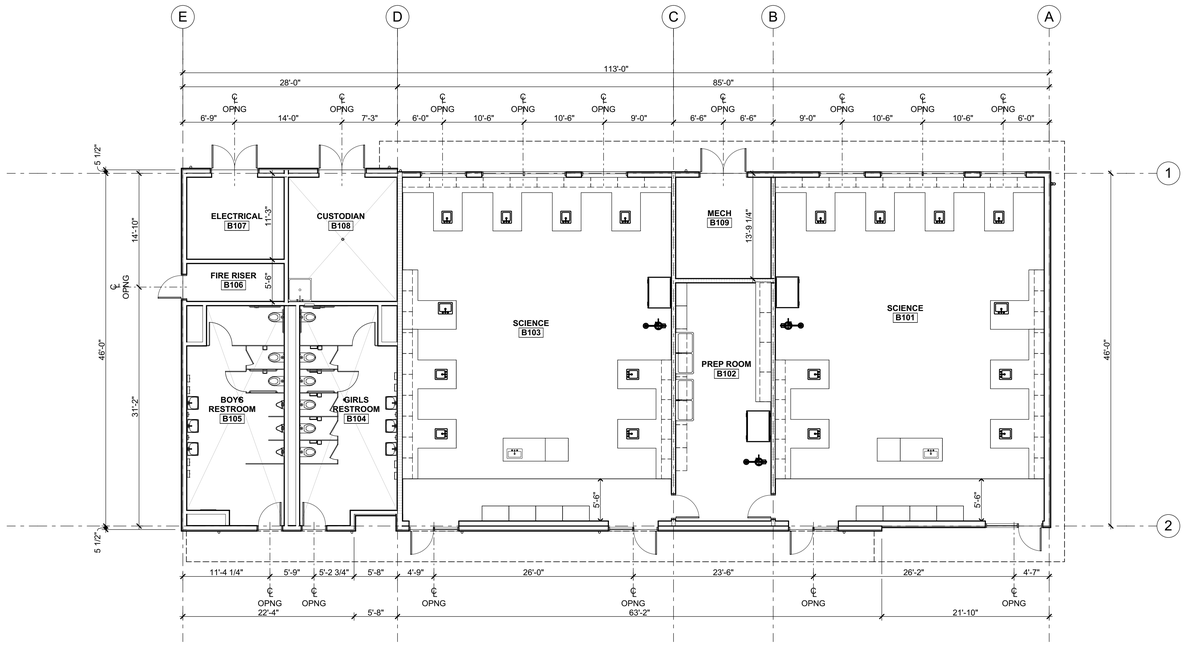

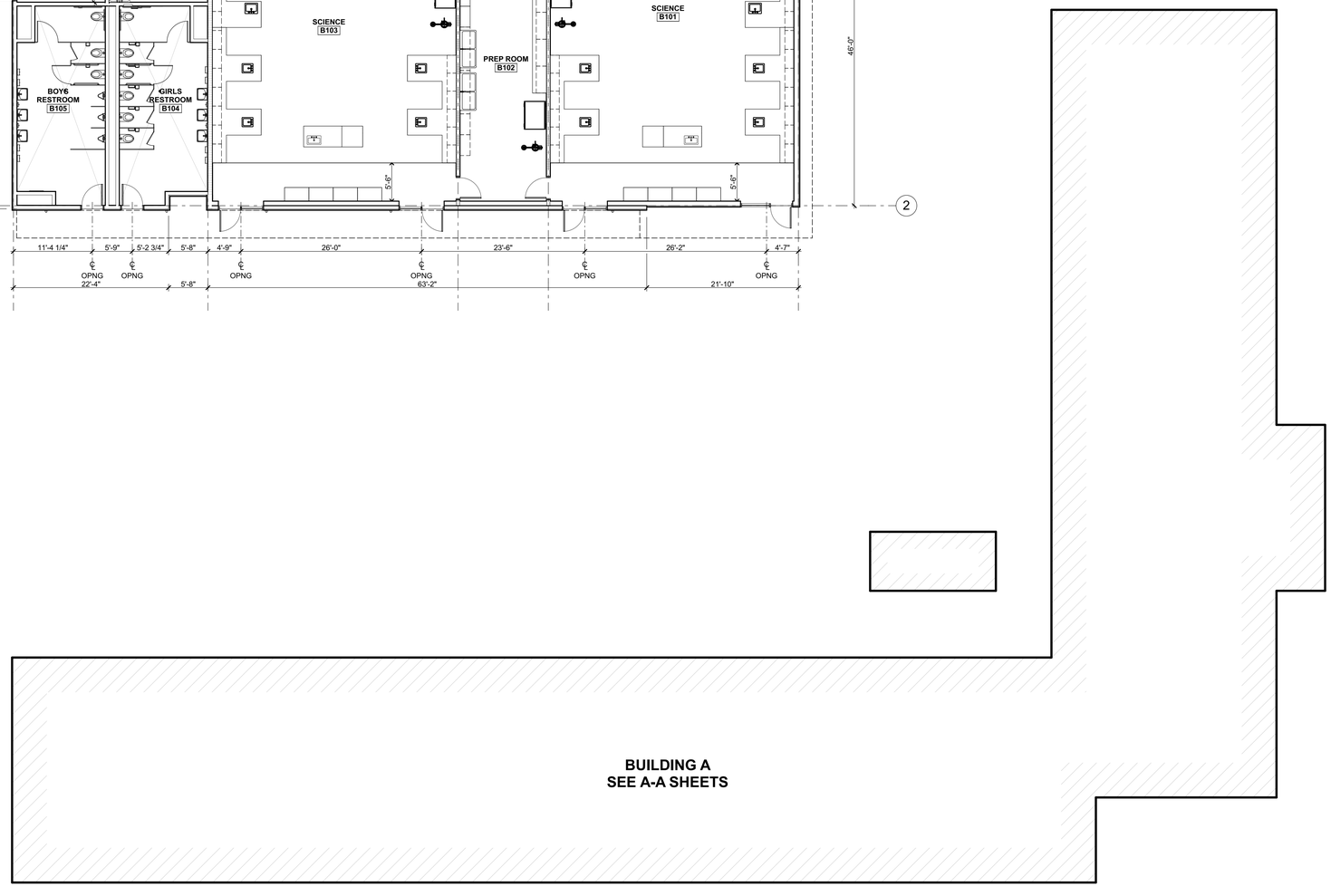

DIMENSION PLAN 1

1/8" = 1'-0"

NORTH

WALL TYPE LEGEND

WD FRAMING: 6" STUDS, TYP U.O.N.
MTL FRAMING: 6" STUDS, TYP U.O.N.

- EXT WALL MTL FRMG W/ CEM PL O/ INSUL BD, SEE 4 / A-9.1
- INT WALL MTL FRMG W/ GYP BD ON EA SIDE, SEE 22 / A-9.1
- INT FURRING WALL MTL FRMG 22 / A-9.1 SIM
- METAL FRAMING - 1 HOUR RATED 21 / A-9.1
- EXT WALL WD FRMG W/ CEM PL O/ INSUL BD, SEE 4 / A-9.2
- INT WALL WD FRMG W/ GYP BD ON EA SIDE, SEE 24 / A-9.2
- INT FURRING WALL WD FRMG 24 / A-9.2 SIM
- WD FRAMING - 1 HOUR RATED 23 / A-9.2
- 6" METAL STUD SIZE, 6" U.O.N.
- 45 ACOUSTIC RATING (STC), SEE 28 / A-9.3
- B101A DOOR A IN ROOM NUMBER 101 IN BUILDING B ACCESSIBLE CLEARANCES SHOWN DASHED SEE 2 / A-8.1
- W03 WINDOW NUMBER 03

KEY PLAN

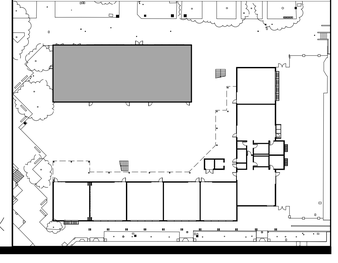

IDENTIFICATION STAMP
DIV. OF THE STATE ARCHITECT
APP: 01-119994 INC:
REVIEWED FOR
SS ☑ FLS ☑ ACS ☑
DATE: 08/16/2022

QUATTROCCHI KWOK ARCHITECTS
Main:
636 Fifth Street, Santa Rosa, CA 95404
East Bay:
55 Harrison Street, Suite 525,
Oakland, CA 94607
(707) 576-0829

LICENSED ARCHITECT
JIM THEISS
LICENSE # C22643
EXP JUNE 30, 2023
STATE OF CALIFORNIA

SIGNED: JUNE 24, 2022

LIBERTY HIGH SCHOOL

NEW CLASSROOM BUILDINGS

850 2ND STREET
BRENTWOOD, CA
94513

LIBERTY UNION
HIGH SCHOOL
DISTRICT

DSA APP NO. 01-119994

ARCH PROJECT NO:	1925.00
DRAWN BY:	HD
DRAWING SCALE:	1/8" = 1'-0"
PTN. 61721-83	FILE NO: 7-H4

CONSTRUCTION DOCUMENTS

JUNE 24, 2022

SHEET TITLE

BLDG B - DIMENSION PLAN

SHEET NUMBER

A-B2.2

BIMcloud: archiserver - BIMcloud Basic for ARCHICAD 22/1925.00 Liberty HS Classroom_BLDG B_AC22:7/27/2022:5:00 PM

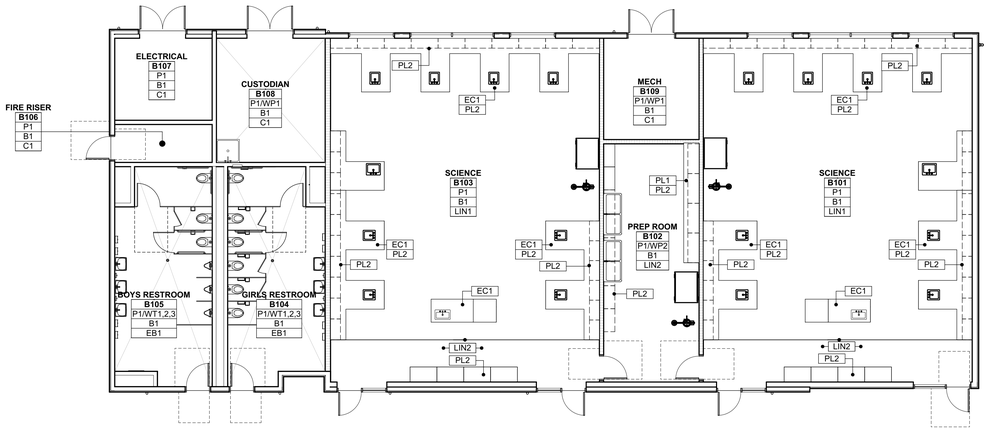

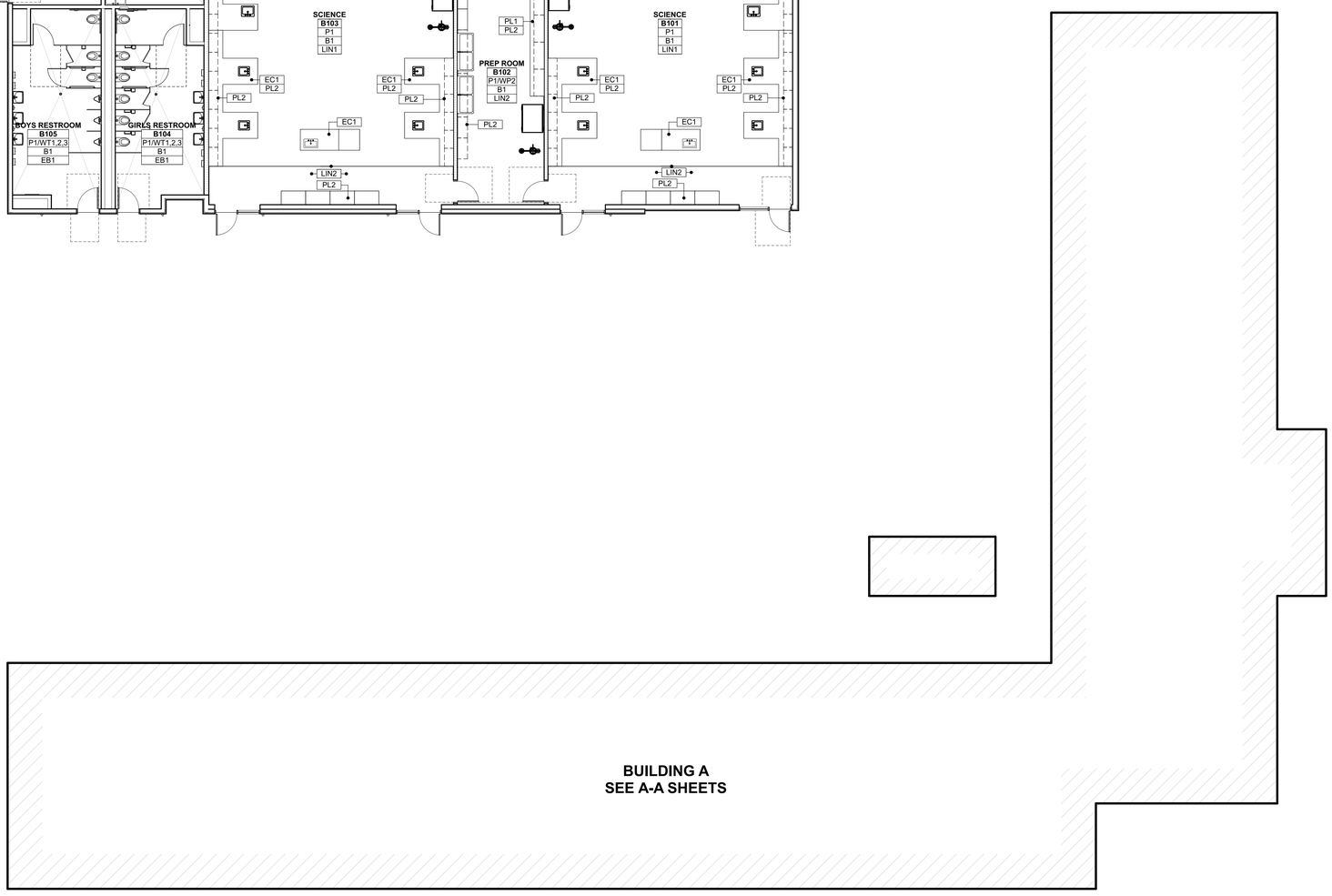

FINISH PLAN GENERAL NOTES

1. SEE FINISH PLAN SHEETS (A-A2.3), (A-A2.6), (A-B2.3), INTERIOR ELEVATION SHEETS (A-A7.1),(A-A7.2),(A-A7.3),(A-A7.4),(A-B7.1) DETAILS AND PROJECT SPECIFICATIONS FOR THE EXTENT OF FINISH DOCUMENTATION AND PRODUCT AND MATERIAL INFORMATION.
2. SEE REFLECTED CEILING PLAN SHEETS (A-A3.1),(A-A3.2),(A-B3.1), FOR SPECIFIC LOCATIONS & CONFIGURATIONS OF GYP. BD. SOFFITS, SUSPENDED CEILING SYSTEMS AND OTHER CEILING ELEMENTS. ALL GYP. SOFFITS TO BE PAINTED P1, U.O.N.
3. FLOOR FINISH INSTALLATION SHALL BE SMOOTH. CHANGES IN LEVEL OF ¼ INCH HIGH MAXIMUM SHALL BE PERMITTED TO BE VERTICAL. CHANGES IN LEVEL OF 1/4 INCH VERTICAL PLUS 1/4 INCH BEVELED SHALL BE IN ACCORDANCE WITH CBC 11B 303. EXPOSED EDGES OF THE FLOORING SHALL BE FASTENED TO THE FLOOR SURFACE AND HAVE TRIM IN ACCORDANCE WITH ACCESSORIES AND INSTALLATIONS OF PRODUCT SPECIFICATION SECTION.
4. NEW FLOORING TO EXTEND UNDER ALL BUILT-IN CASEWORK.
5. CONTRACTOR TO VERIFY W/ ARCHITECT ALL MATERIAL / COLOR TERMINATION POINTS ON ALL HORIZONTAL & VERTICAL SURFACES PRIOR TO START OF WORK.
6. INTERIOR PAINTED WALLS ARE TO BE P1 TYP, U.O.N.. SEE FINISH SCHEDULE AND PROJECT SPECIFICATION FOR PAINTING SCHEDULE AND SHEEN DESIGNATION, U.O.N..
7. ALL INTERIOR GRILLES AND REGISTERS TO MATCH ADJACENT WALL COLOR, U.O.N.
8. ALL PAINTED HOLLOW METAL DOOR FRAMES TO BE PAINTED ON ALL SIDES, TYP U.O.N.. SEE DOOR SCHEDULE ON SHEET (A-8.1) FOR FINISH TYPES.
9. ALL PAINTED METAL WINDOW FRAMES TO BE PAINTED ON ALL SIDES, TYP U.O.N.. SEE WINDOW SCHEDULE ON SHEET (A-8.2) FINISH TYPES.
10. FOR FACTORY FINISH WINDOW FRAMES SEE WINDOW SCHEDULE ON SHEET (A-8.2) FINISH TYPES.

FINISH PLAN LEGEND

SEE SHEET A-8.3 FOR FINISH INFORMATION

ROOM NAME
ROOM #

P1	WALL FINISH CODE
B1	BASE FINISH CODE
CPT1	FLOOR FINISH CODE
CPT2	SECONDARY FLOOR FINISH TAG
	FLOOR MATERIAL TRANSITION
	GRAIN DIRECTION
P2	WALL FINISH TAG
	FINISH CODE
	EXTENT OF MATERIAL
PL1	PL1 REFERS TO COUNTERTOP FINISH
PL2	PL2 REFERS TO CABINET FACE FINISH

FINISH PLAN 1
1/8" = 1'-0"

NORTH

KEY PLAN

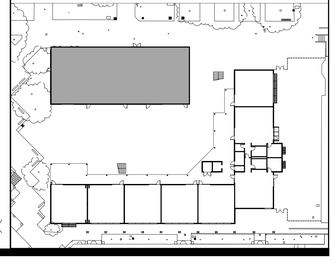

IDENTIFICATION STAMP
DIV. OF THE STATE ARCHITECT
APP: 01-119994 INC:
REVIEWED FOR
SS ☑ FLS ☑ ACS ☑
DATE: 08/16/2022

QUATTROCCHI KWOK ARCHITECTS
Main:
636 Fifth Street, Santa Rosa, CA 95404
East Bay:
55 Harrison Street, Suite 525,
Oakland, CA. 94607
(707) 576-0829

LICENSED ARCHITECT
JIM THEISS
LICENSE # C22643
EXP JUNE 30, 2023
STATE OF CALIFORNIA

SIGNED: JUNE 24, 2022

LIBERTY HIGH SCHOOL

NEW CLASSROOM BUILDINGS

850 2ND STREET
BRENTWOOD, CA
94513

LIBERTY UNION
HIGH SCHOOL
DISTRICT

DSA APP NO. 01-119994

ARCH PROJECT NO:	1925.00
DRAWN BY:	HD
DRAWING SCALE:	1/8" = 1'-0"
PTN. 61721-83	FILE NO: 7-H4

CONSTRUCTION DOCUMENTS

JUNE 24, 2022

SHEET TITLE

BLDG B - FINISH PLAN

SHEET NUMBER

A-B2.3

BIMcloud: archiserver - BIMcloud Basic for ARCHICAD 22/1925.00 Liberty HS Classroom_BLDG B_AC22:7/27/2022,5:00 PM

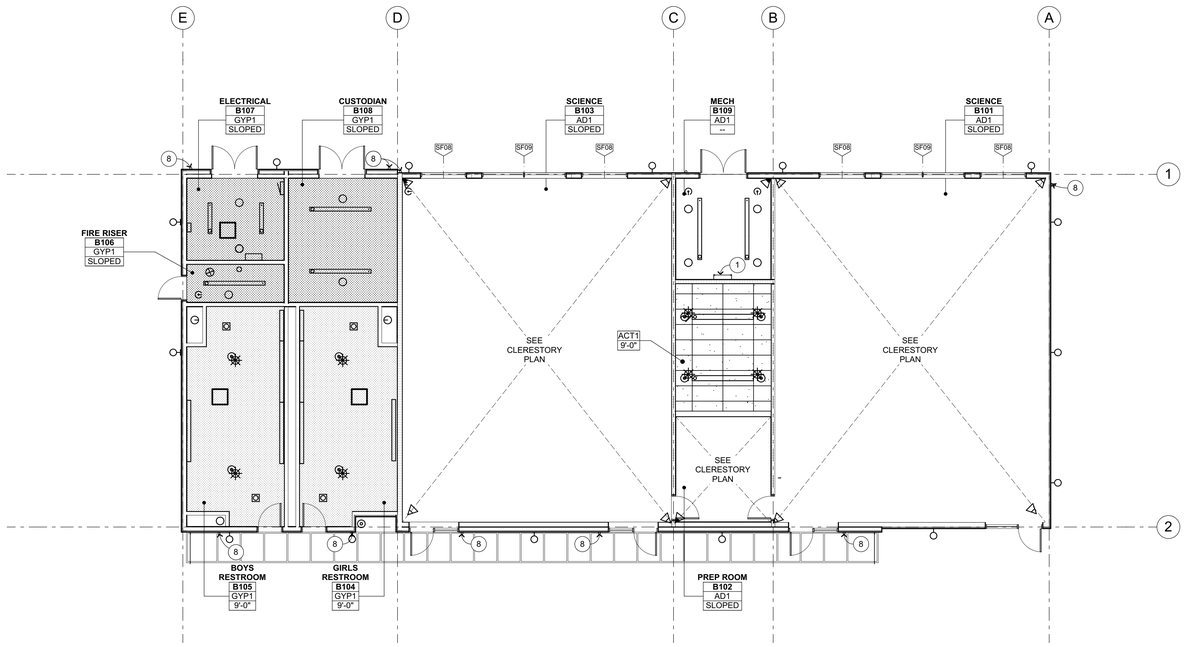

REFLECTED CEILING PLAN

1/8" = 1'-0"

NORTH

REFLECTED CEILING PLAN KEYNOTES

NOT ALL KEYNOTES MAY APPLY TO THIS SHEET

1. ROOF ACCESS LADDER, SEE 24/A-9.7 25/A-9.7
2. EXPOSED STRUCTURE, S.S.D. MTL WD
3. SHADE STRUCTURE, SEE 22/A-9.4
4. INTEGRATED RAIN CANOPY
5. MANUAL WINDOW SHADES, SEE 27/A-10.3
6. POWERED WINDOW SHADES, SEE 28/A-10.3
7. WALL MOUNTED SHORT THROW PROJECTOR, OFOI CONTR SHALL PROVIDE BACKING PER 21/A-10.3 25/A-10.4
8. RAIN WATER LEADER, SEE 9/A-9.8

REFLECTED CEILING PLAN LEGEND

ROOM NUMBER
XX1
X'-X"

XX1 REFERS TO CEILING FINISH CODE SEE BELOW.
X'-X" REFERS TO FINISHED CEILING HEIGHT AFF.
WHERE CEILING HEIGHT IS INDICATED AS "OPEN" OR "- -", ROOM IS OPEN TO STRUCTURE ABOVE. FOR CEILING CONFIGURATION & HEIGHT WHERE CEILING HEIGHT IS INDICATED AS CURVED, SLOPING, OR VARIES, REFER TO SECTION DRAWINGS.

DOORS SHOWN DASHED INDICATE DOOR BELOW. FOR DEMO, (E), AND (N) DOOR/FRAME INFORMATION SEE FLOOR PLANS & DOOR SCHEDULE

ELECTRICAL ITEMS, S.E.D.

MECHANICAL ITEMS, S.M.D.

FIRE SPRINKLERS, S.F.P.D.

CEILING FINISH CODES

FOR PAINT FINISHES SEE SEC. 09 9113 (EXTERIOR) & 09 9123 (INTERIOR).

SEE FINISH SCHEDULE ON SHEET A-8.3 FOR FINISH INFORMATION

- GYPSUM BOARD
- 2'X4' SUSPENDED CEILING SYSTEM W/ ACOUSTIC TILE — 3/A-10.2 MTL, 7/A-10.1 WD
- EXTERIOR CEMENT PLASTER W/ CONTROL JOINTS AS SHOWN — 4/A-9.1 MTL, 4/A-9.2 WD
- ACOUSTIC METAL DECK
- EXPOSED CEILING/ROOF STRUCTURE, PAINTED
- OPEN AIR CHASE

KEY PLAN

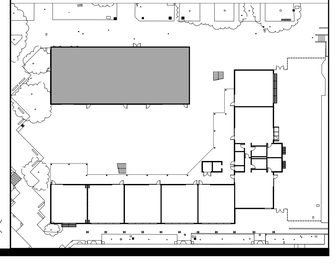

IDENTIFICATION STAMP
DIV. OF THE STATE ARCHITECT
APP: 01-119994 INC:
REVIEWED FOR
SS ☑ FLS ☑ ACS ☑
DATE: 08/16/2022

QUATTROCCHI KWOK ARCHITECTS
Main:
636 Fifth Street, Santa Rosa, CA 95404
East Bay:
55 Harrison Street, Suite 525,
Oakland, CA 94607
(707) 576-0829

LICENSED ARCHITECT
JIM THEISS
LICENSE # C22643
EXP JUNE 30, 2023
STATE OF CALIFORNIA

SIGNED: JUNE 24, 2022

LIBERTY HIGH SCHOOL

NEW CLASSROOM BUILDINGS

850 2ND STREET
BRENTWOOD, CA
94513

LIBERTY UNION HIGH SCHOOL DISTRICT

DSA APP NO. 01-119994

ARCH PROJECT NO:	1925.00
DRAWN BY:	HD
DRAWING SCALE:	1/8" = 1'-0"
PTN: 61721-83	FILE NO: 7-H4

CONSTRUCTION DOCUMENTS

JUNE 24, 2022

SHEET TITLE

BLDG B - REFLECTED CEILING PLAN

SHEET NUMBER

A-B3.1

BIMcloud: archiserver - BIMcloud Basic for ARCHICAD 22/1925.00 Liberty HS Classroom_BLDG B_AC22.7/27/2022 5:00 PM

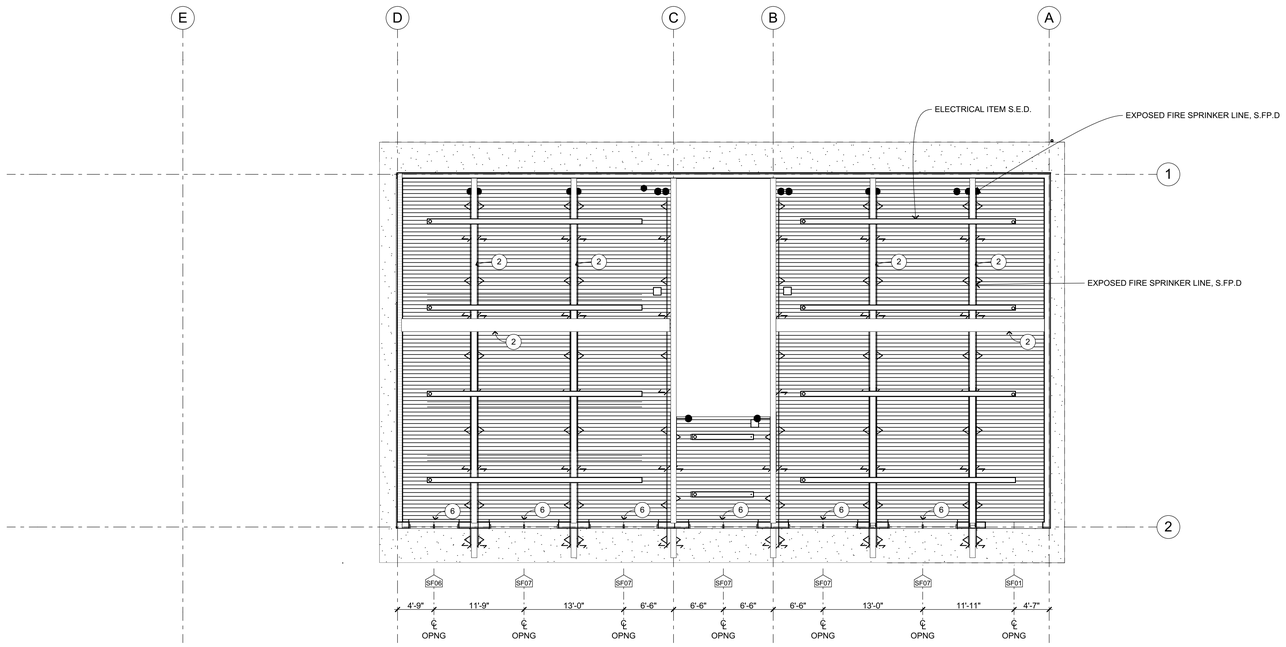

CLERESTORY PLAN 1

1/8" = 1'-0"

NORTH

REFLECTED CEILING PLAN KEYNOTES

NOT ALL KEYNOTES MAY APPLY TO THIS SHEET

1. ROOF ACCESS LADDER, SEE 24/A-9.7 25/A-9.7 MTL WD
2. EXPOSED STRUCTURE, S.S.D.
3. SHADE STRUCTURE, SEE 22/A-9.4
4. INTEGRATED RAIN CANOPY
5. MANUAL WINDOW SHADES, SEE 27/A-10.3
6. POWERED WINDOW SHADES, SEE 28/A-10.3
7. WALL MOUNTED SHORT THROW PROJECTOR, OFOI CONTR SHALL PROVIDE BACKING PER 21/A-10.3 26/A-10.4
8. RAIN WATER LEADER, SEE 9/A-9.8

REFLECTED CEILING PLAN LEGEND

ROOM NUMBER
XX1
X'-X"

XX1 REFERS TO CEILING FINISH CODE SEE BELOW.
X'-X" REFERS TO FINISHED CEILING HEIGHT AFF.
WHERE CEILING HEIGHT IS INDICATED AS "OPEN" OR "- -", ROOM IS OPEN TO STRUCTURE ABOVE. FOR CEILING CONFIGURATION & HEIGHT WHERE CEILING HEIGHT IS INDICATED AS CURVED, SLOPING, OR VARIES, REFER TO SECTION DRAWINGS.

DOORS SHOWN DASHED INDICATE DOOR BELOW. FOR DEMO, (E), AND (N) DOOR/FRAME INFORMATION SEE FLOOR PLANS & DOOR SCHEDULE

ELECTRICAL ITEMS, S.E.D.

MECHANICAL ITEMS, S.M.D.

FIRE SPRINKLERS, S.F.P.D.

CEILING FINISH CODES

FOR PAINT FINISHES SEE SEC. 09 9113 (EXTERIOR) & 09 9123 (INTERIOR).

SEE FINISH SCHEDULE ON SHEET A-8.3 FOR FINISH INFORMATION

- GYPSUM BOARD
- 2'X4' SUSPENDED CEILING SYSTEM W/ ACOUSTIC TILE — 3/A-10.2 MTL, 7/A-10.1 WD
- EXTERIOR CEMENT PLASTER W/ CONTROL JOINTS AS SHOWN — 4/A-9.1 MTL, 4/A-9.2 WD
- ACOUSTIC METAL DECK
- EXPOSED CEILING/ROOF STRUCTURE, PAINTED
- OPEN AIR CHASE

KEY PLAN

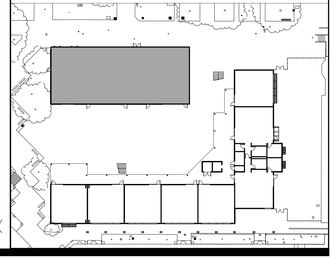

IDENTIFICATION STAMP
DIV. OF THE STATE ARCHITECT
APP: 01-119994 INC:
REVIEWED FOR
SS ☑ FLS ☑ ACS ☑
DATE: 08/16/2022

QUATTROCCHI KWOK ARCHITECTS
Main:
636 Fifth Street, Santa Rosa, CA 95404
East Bay:
55 Harrison Street, Suite 525,
Oakland, CA 94607
(707) 576-0829

LICENSED ARCHITECT
JIM THEISS
LICENSE # C22643
EXP. JUNE 30, 2023
STATE OF CALIFORNIA

SIGNED: JUNE 24, 2022

LIBERTY HIGH SCHOOL

NEW CLASSROOM BUILDINGS

850 2ND STREET
BRENTWOOD, CA
94513

LIBERTY UNION HIGH SCHOOL DISTRICT

DSA APP NO. 01-119994

ARCH PROJECT NO:	1925.00
DRAWN BY:	HD
DRAWING SCALE:	1/8" = 1'-0"
PTN: 61721-83	FILE NO: 7-H4

CONSTRUCTION DOCUMENTS

JUNE 24, 2022

SHEET TITLE

BLDG B - CLERESTORY PLAN

SHEET NUMBER

A-B3.2

BIMcloud: archiserver - BIMcloud Basic for ARCHICAD 22/1925.00 Liberty HS Classroom_BLDG B_AC22.7/27/2022-5:00 PM

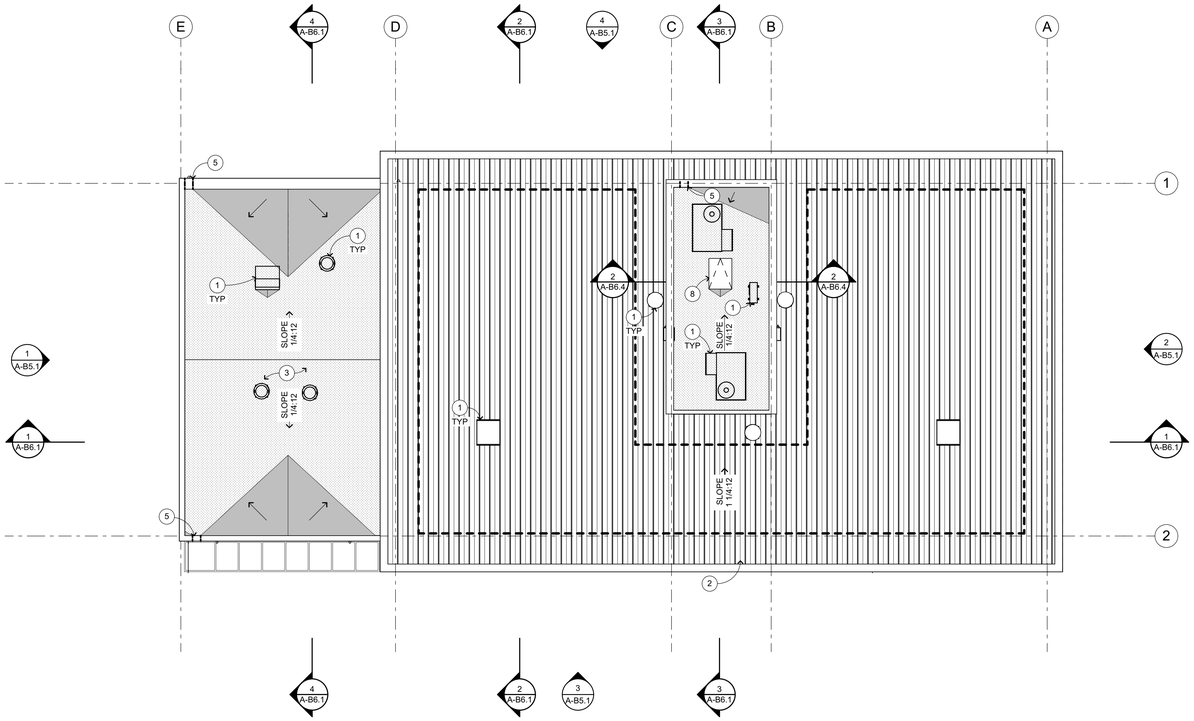

ROOF PLAN KEYNOTES

NOT ALL KEYNOTES MAY APPLY TO THIS SHEET

1. MECHANICAL ITEM (S.M.D.), FOR CURB WHERE OCCURS SEE 13/A-9.5
2. STANDING SEAM METAL ROOF, SEE 14/A-9.6, 15/A-9.6, 26/A-9.6
3. BUILT-UP ROOFING O/PLYWOOD SHEATHING, SEE 1/A-9.6
4. ROOF DRAIN W/ OVERFLOW, SEE 2/A-9.5
5. ROOF SCUPPER W/ CONDUCTOR, SEE MTL 2/A-9.5, WD 11/A-9.5
6. GUTTER, SEE MTL 2/A-9.8, WD 12/A-9.8
7. SHADE STRUCTURE, SEE 22/A-9.4
8. ROOF ACCESS HATCH, SEE 17/A-9.7
9. ROOF ANCHOR, SEE 24/A-9.5

ROOF PLAN LEGEND

SEE FINISH SCHEDULE ON SHEET A-8.3 FOR ADDITIONAL INFORMATION

- +0'-0" — DIMENSION INDICATING TOP OF ROOF LEVEL. SEE DETAILS FOR TOP OF ROOF LOCATION WITHIN ASSEMBLY
- MODIFIED BITUMEN ROOFING O/ MTL FRAMING 1/A-9.5
- MODIFIED BITUMEN ROOFING O/ WD FRAMING 1/A-9.6
- MODIFIED BITUMEN ROOFING O/ TAPERED INSULATION
- PREFORMED METAL ROOFING O/ ACOUSTIC DECKING 26/A-9.6
- SOLAR READY N.I.C.

KEY PLAN

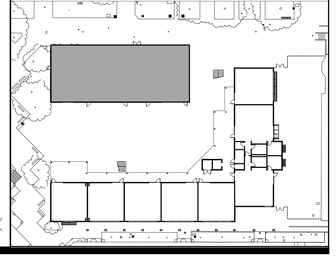

ROOF PLAN 1

1/8" = 1'-0"

NORTH

IDENTIFICATION STAMP
DIV. OF THE STATE ARCHITECT
APP: 01-119994 INC:
REVIEWED FOR
SS ☑ FLS ☑ ACS ☑
DATE: 08/16/2022

QUATTROCCHI KWOK ARCHITECTS
Main:
636 Fifth Street, Santa Rosa, CA 95404
East Bay:
55 Harrison Street, Suite 525,
Oakland, CA 94607
(707) 576-0829

LICENSED ARCHITECT
JIM THEISS
LICENSE # C22643
EXP JUNE 30, 2023
STATE OF CALIFORNIA

SIGNED: JUNE 24, 2022

LIBERTY HIGH SCHOOL

NEW CLASSROOM BUILDINGS

850 2ND STREET
BRENTWOOD, CA
94513

LIBERTY UNION HIGH SCHOOL DISTRICT

DSA APP NO. 01-119994

ARCH PROJECT NO:	1925.00
DRAWN BY:	HD
DRAWING SCALE:	1/8" = 1'-0"
PTN. 61721-83	FILE NO: 7-H4

CONSTRUCTION DOCUMENTS

JUNE 24, 2022

SHEET TITLE

BLDG B - ROOF PLAN

SHEET NUMBER

A-B4.1

BIMcloud: archiserver - BIMcloud Basic for ARCHICAD 22/1925.00 Liberty HS Classroom_BLDG B_AC22:7/27/2022 5:00 PM

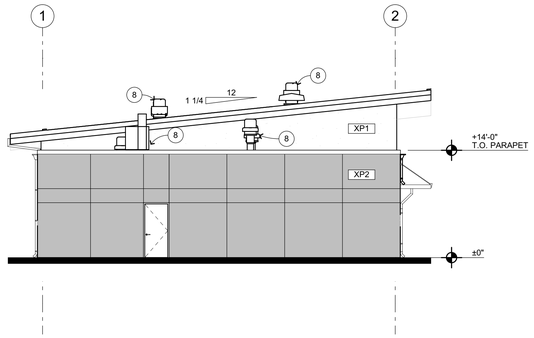

NORTH ELEVATION 1

1/8" = 1'-0"

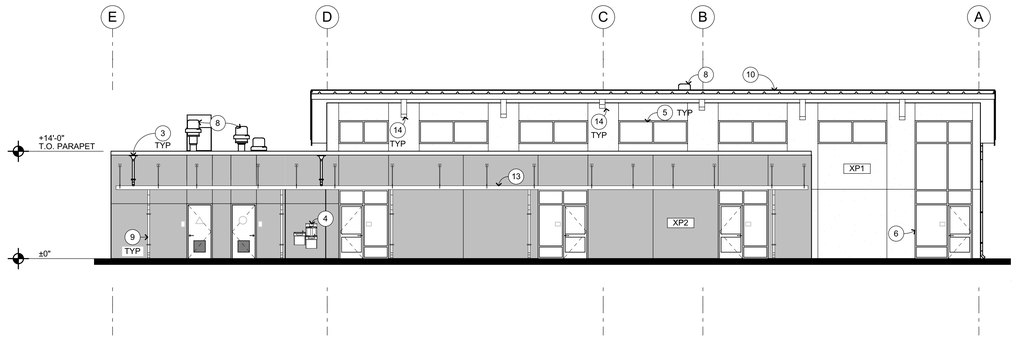

WEST ELEVATION 3

1/8" = 1'-0"

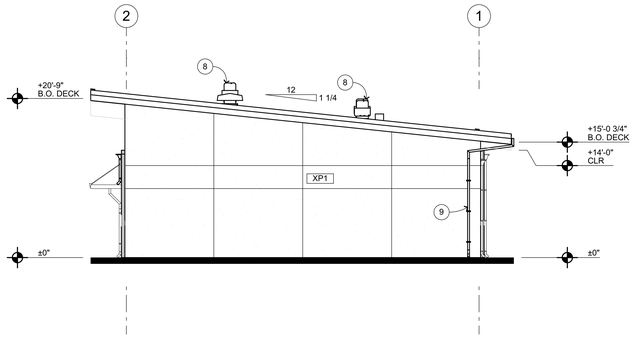

SOUTH ELEVATION 2

1/8" = 1'-0"

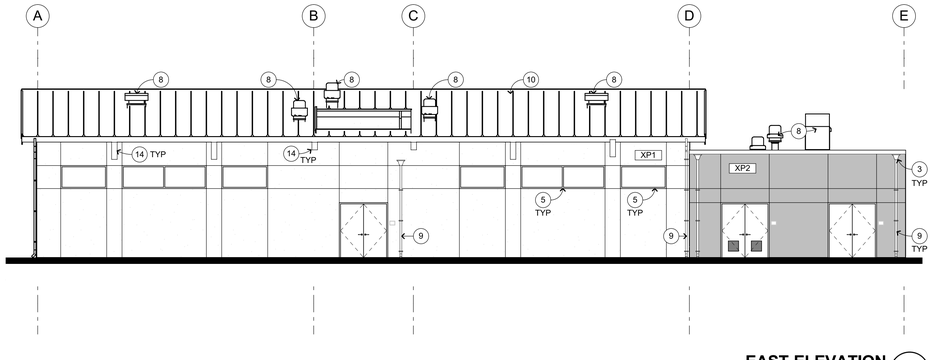

EAST ELEVATION 4

1/8" = 1'-0"

EXTERIOR ELEVATION KEYNOTES

NOT ALL KEYNOTES MAY APPLY TO THIS SHEET

1. LIGHT FIXTURE, S.E.D.
2. SHADE STRUCTURE, SEE 22/A-9.4
3. SCUPPER W/ CONDUCTOR HEAD, SEE 11/A-9.5
4. ACCESSIBLE HI-LO DRINKING FOUNTAIN W/ BOTTLE FILLER, SEE 2/A-10.3
5. STOREFRONT WINDOWS, SEE A-8.2 FOR WINDOW SCHEDULE
6. CURTAIN WALL SYSTEM
7. STRUCTURAL PERFORATED METAL SIGNAGE
8. MECHANICAL ITEM, S.M.D.
9. RAIN WATER LEADER, SEE 4/A-9.8
10. STANDING SEAM MTL ROOF, SEE 24/A-9.6
11. STRUCTURAL COLUMN, S.S.D.
12. GUARDRAIL, SEE 10/A-A6.4
13. INTEGRATED RAIN CANOPY, SEE 2/A-9.7
14. STRUCTURAL BEAM, S.S.D.

EXTERIOR ELEVATION LEGEND

SEE FINISH SCHEDULE ON SHEET A-8.3 FOR FINISH INFORMATION

XX1 — XX1 REFERS TO EXTERIOR FINISH CODE SEE BELOW.

PLASTER CONTROL JOINT, TYP

XP1 CEMENT PLASTER 4/A-9.1

XP2 CEMENT PLASTER; COLUMNS

DM1 PERFORATED METAL PANELS

KEY PLAN

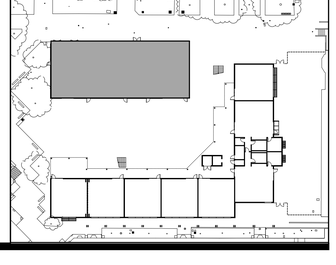

IDENTIFICATION STAMP
DIV. OF THE STATE ARCHITECT
APP: 01-119994 INC:
REVIEWED FOR
SS ☑ FLS ☑ ACS ☑
DATE: 08/16/2022

QUATTROCCHI KWOK ARCHITECTS
Main:
636 Fifth Street, Santa Rosa, CA 95404
East Bay:
55 Harrison Street, Suite 525,
Oakland, CA 94607
(707) 576-0829

LICENSED ARCHITECT
JIM THEISS
LICENSE # C22643
EXP JUNE 30, 2023
STATE OF CALIFORNIA

SIGNED: JUNE 24, 2022

LIBERTY HIGH SCHOOL

NEW CLASSROOM BUILDINGS

850 2ND STREET
BRENTWOOD, CA
94513

LIBERTY UNION HIGH SCHOOL DISTRICT

DSA APP NO. 01-119994

ARCH PROJECT NO:	1925.00
DRAWN BY:	HD
DRAWING SCALE:	1/8" = 1'-0"
PTN: 61721-83	FILE NO: 7-H4

CONSTRUCTION DOCUMENTS

JUNE 24, 2022

SHEET TITLE

BLDG B - EXTERIOR ELEVATIONS

SHEET NUMBER

A-B5.1

BIMcloud: archiserver - BIMcloud Basic for ARCHICAD 22/1925.00 Liberty HS Classroom, BLDG B_AC22.7/27/2022:5:00 PM

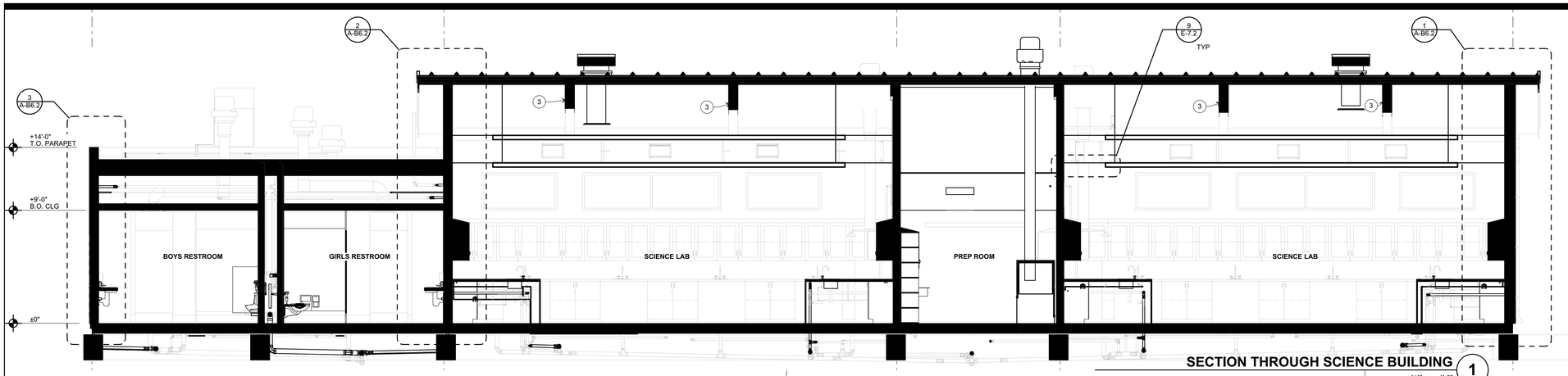

SECTION THROUGH SCIENCE BUILDING 1

1/4" = 1'-0"

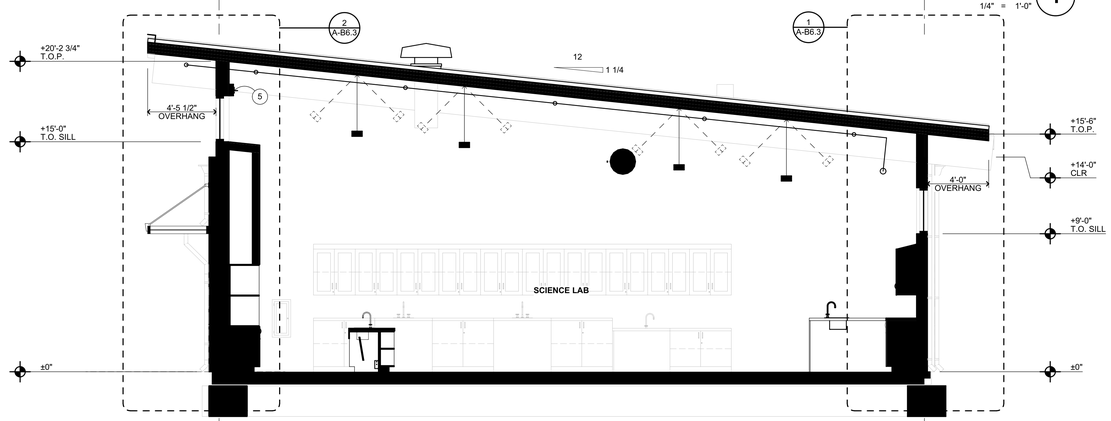

SECTION THROUGH SCIENCE LAB 2

1/4" = 1'-0"

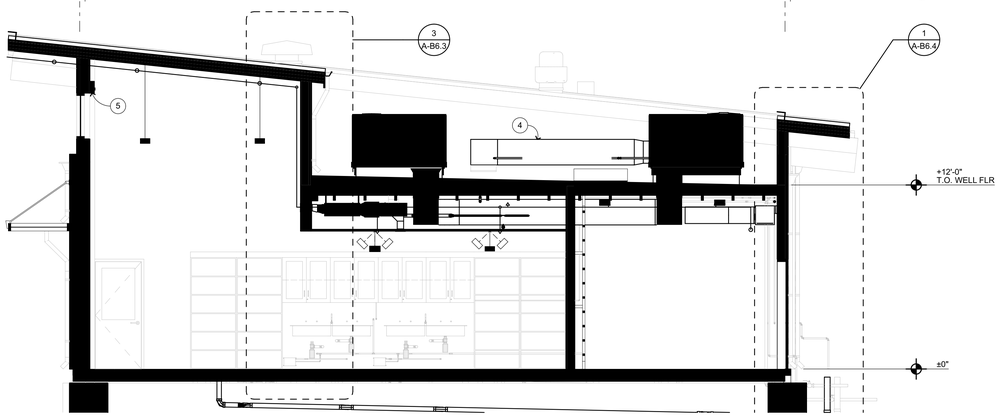

SECTION THROUGH PREP ROOM / MECH WELL 3

1/4" = 1'-0"

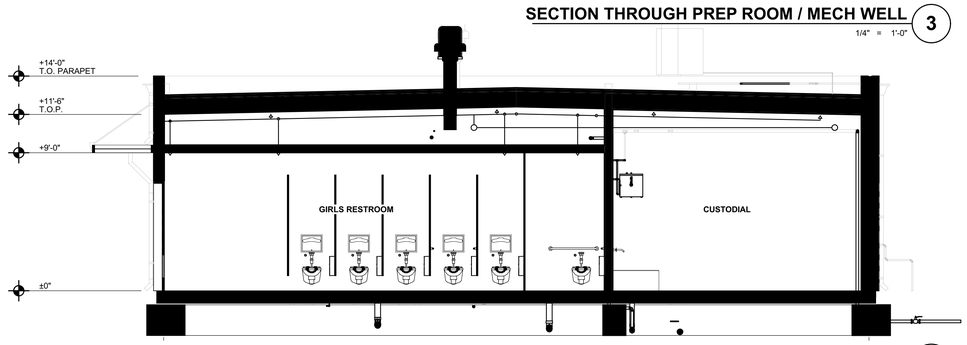

SECTION THROUGH RESTROOMS 4

1/4" = 1'-0"

SECTION KEYNOTES

NOT ALL KEYNOTES MAY APPLY TO THIS SHEET

1. STRUCTURAL FRAMING, S.S.D.
2. MECHANICAL ITEM, S.M.D.
3. EXPOSED STRUCTURAL BEAMS, S.S.D.
4. ROOF HATCH, SEE 17/A-9.7
5. MOTORIZED WINDOW SHADES, SEE 28/A-10.3
6. PERFORATED METAL SIGNAGE, SEE 22/A-9.9

KEY PLAN

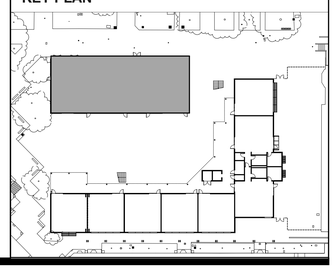

IDENTIFICATION STAMP
DIV. OF THE STATE ARCHITECT
APP: 01-119994 INC:
REVIEWED FOR
SS ☑ FLS ☑ ACS ☑
DATE: 08/16/2022

QUATTROCCHI KWOK ARCHITECTS
Main:
636 Fifth Street, Santa Rosa, CA 95404
East Bay:
55 Harrison Street, Suite 525,
Oakland, CA 94607
(707) 576-0829

LICENSED ARCHITECT
JIM THEISS
LICENSE # C22643
EXP JUNE 30, 2023
STATE OF CALIFORNIA

SIGNED: JUNE 24, 2022

LIBERTY HIGH SCHOOL

NEW CLASSROOM BUILDINGS

850 2ND STREET
BRENTWOOD, CA
94513

LIBERTY UNION HIGH SCHOOL DISTRICT

DSA APP NO. 01-119994

ARCH PROJECT NO:	1925.00
DRAWN BY:	HD
DRAWING SCALE:	1/4" = 1'-0"
PTN: 61721-83	FILE NO: 7-H4

CONSTRUCTION DOCUMENTS

JUNE 24, 2022

SHEET TITLE

BLDG B - BUILDING SECTIONS

SHEET NUMBER

A-B6.1

BIMcloud: archiserver - BIMcloud Basic for ARCHICAD 22/1925.00 Liberty HS Classroom_BLDG B_AC22.7/27/2022 5:00 PM

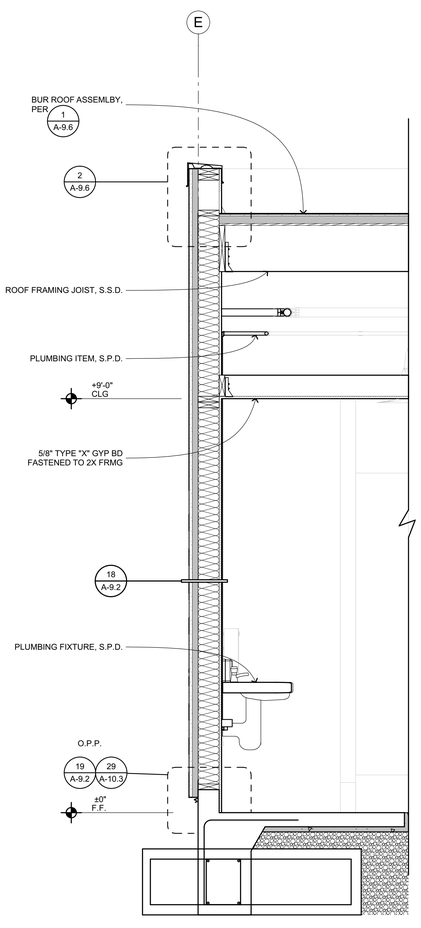

EXT WALL AT RESTROOM 3

3/4" = 1'-0"

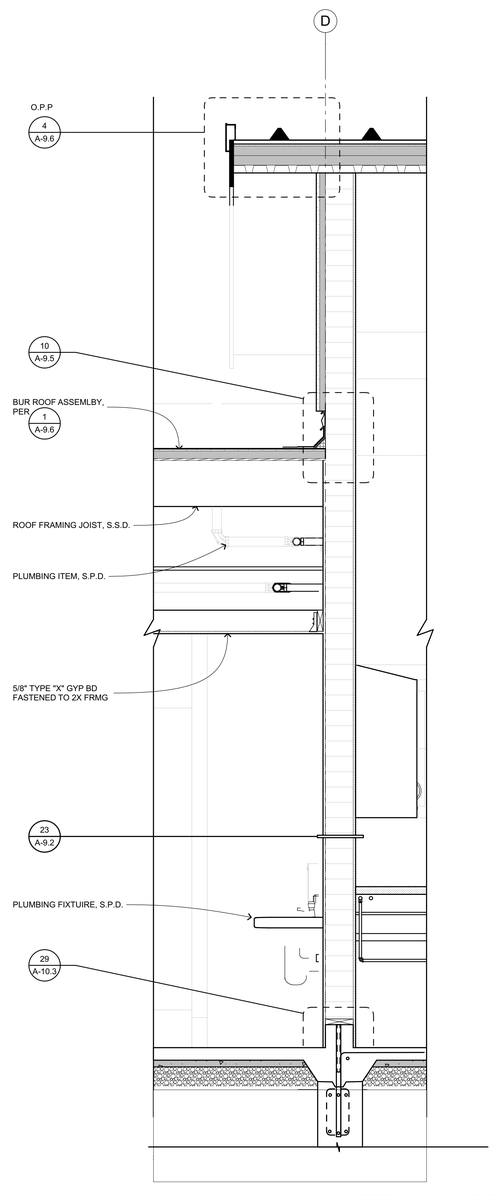

RATED WALL AT RESTROOM 2

3/4" = 1'-0"

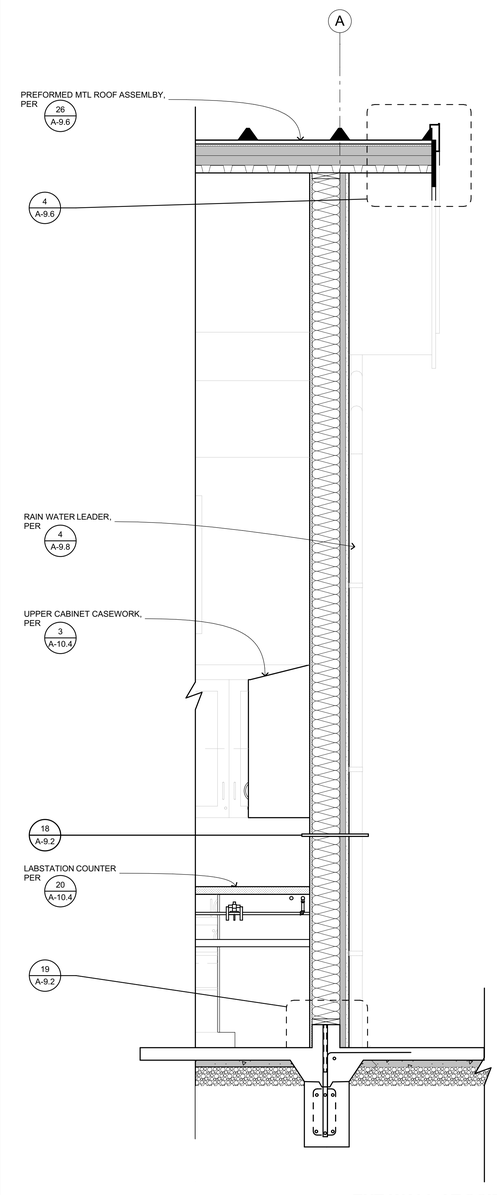

EXT WALL AT SCIENCE LAB 1

3/4" = 1'-0"

IDENTIFICATION STAMP
DIV. OF THE STATE ARCHITECT
APP: 01-119994 INC:
REVIEWED FOR
SS ☑ FLS ☑ ACS ☑
DATE: 08/16/2022

QUATTROCCHI KWOK ARCHITECTS
Main:
636 Fifth Street, Santa Rosa, CA 95404
East Bay:
55 Harrison Street, Suite 525,
Oakland, CA 94607
(707) 576-0829

LICENSED ARCHITECT
JIM THISS
LICENSE # C22643
EXP. JUNE 30, 2023
STATE OF CALIFORNIA

SIGNED: JUNE 24, 2022

LIBERTY HIGH SCHOOL

NEW CLASSROOM BUILDINGS

850 2ND STREET
BRENTWOOD, CA
94513

LIBERTY UNION HIGH SCHOOL DISTRICT

DSA APP NO. 01-119994

ARCH PROJECT NO:	1925.00
DRAWN BY:	JDS
DRAWING SCALE:	3/4" = 1'-0"
PTN: 61721-83	FILE NO: 7-H4

CONSTRUCTION DOCUMENTS

JUNE 24, 2022

SHEET TITLE

WALL SECTIONS

SHEET NUMBER

A-B6.2

BIMcloud: archiserver - BIMcloud Basic for ARCHICAD 22/1925.00 Liberty HS Classroom_BLDG B_AC22:7/27/2022 5:00 PM

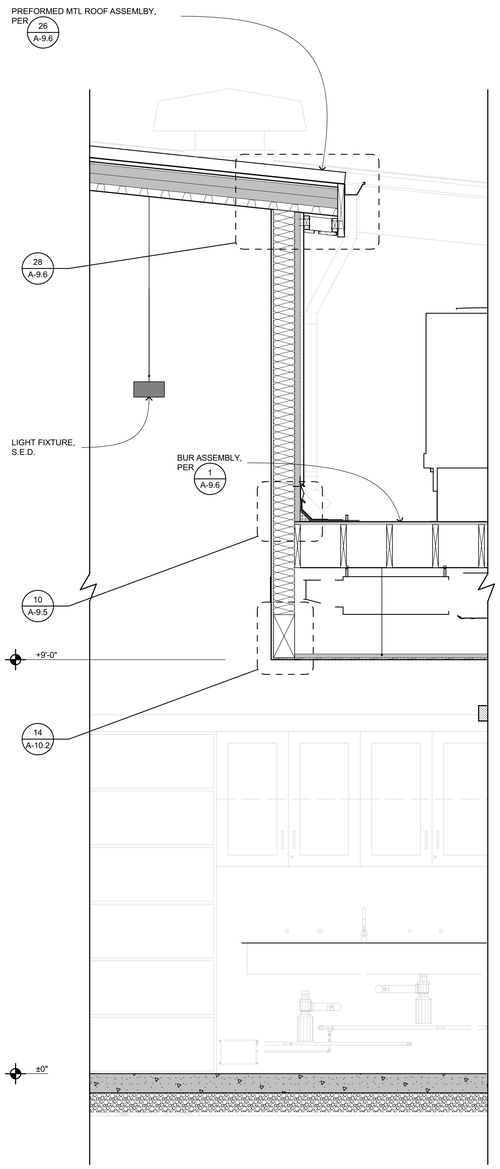

EXT WALL AT MECH WELL 3

3/4" = 1'-0"

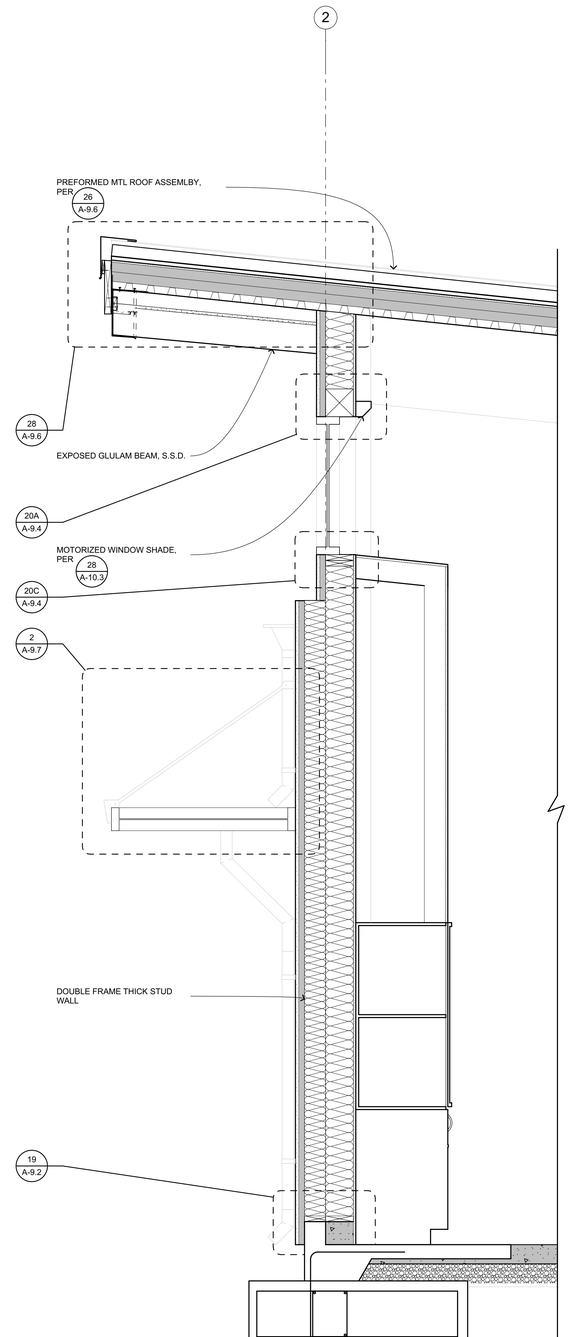

EXT WEST WALL AT SCIENCE LAB 2

3/4" = 1'-0"

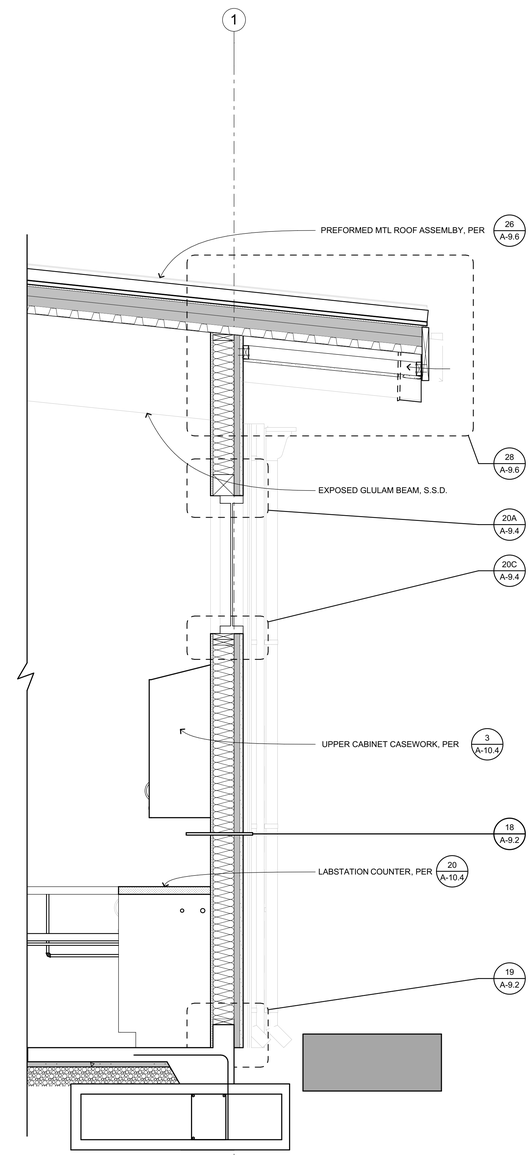

EXT EAST WALL AT SCIENCE LAB 1

3/4" = 1'-0"

IDENTIFICATION STAMP
DIV. OF THE STATE ARCHITECT
APP: 01-119994 INC:
REVIEWED FOR
SS ☑ FLS ☑ ACS ☑
DATE: 08/16/2022

QUATTROCCHI KWOK ARCHITECTS
Main:
636 Fifth Street, Santa Rosa, CA 95404
East Bay:
55 Harrison Street, Suite 525,
Oakland, CA 94607
(707) 576-0829

LICENSED ARCHITECT
JIM THISS
LICENSE # C22643
EXP JUNE 30, 2023
STATE OF CALIFORNIA

SIGNED: JUNE 24, 2022

LIBERTY HIGH SCHOOL

NEW CLASSROOM BUILDINGS

850 2ND STREET
BRENTWOOD, CA
94513

LIBERTY UNION HIGH SCHOOL DISTRICT

DSA APP NO. 01-119994

ARCH PROJECT NO:	1925.00
DRAWN BY:	JDS
DRAWING SCALE:	3/4" = 1'-0"
PTN: 61721-83	FILE NO: 7-H4

CONSTRUCTION DOCUMENTS

JUNE 24, 2022

SHEET TITLE

WALL SECTIONS

SHEET NUMBER

A-B6.3

BIMcloud: archiserver - BIMcloud Basic for ARCHICAD 22/1925.00 Liberty HS Classroom_BLDG B_AC22.7/27/2022 5:00 PM

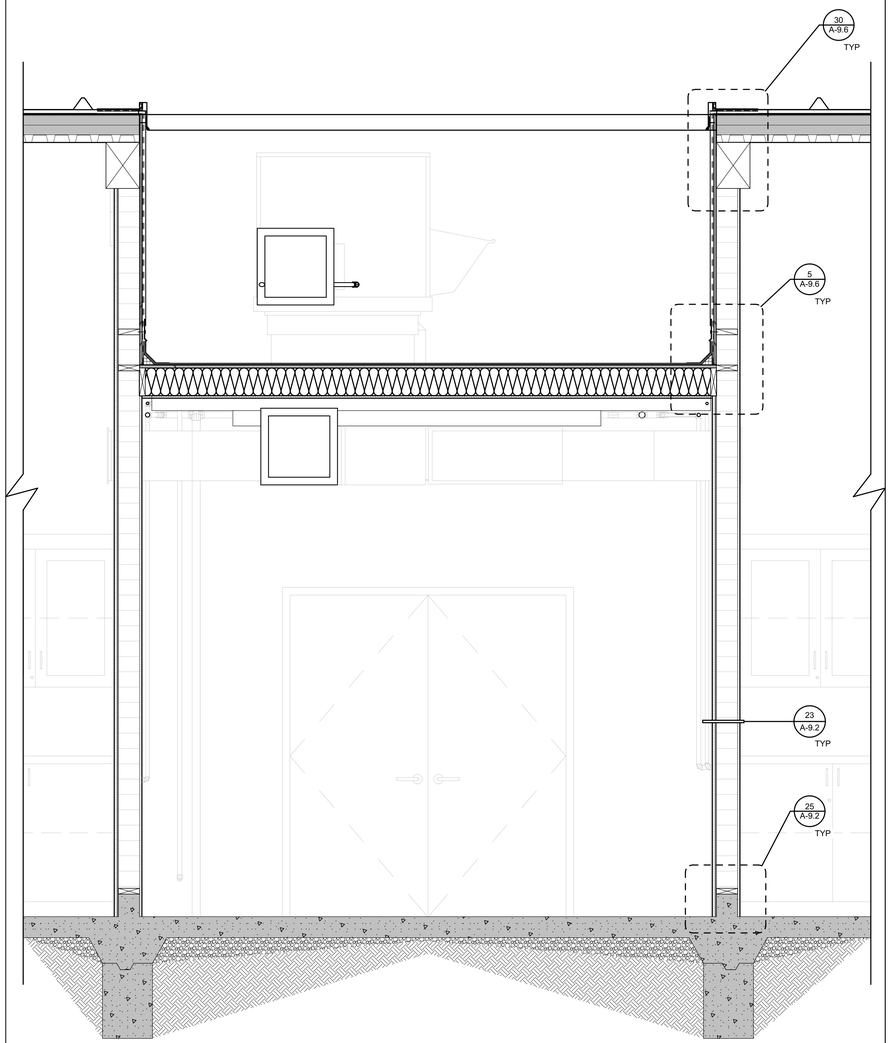

SECTION THROUGH MECHANICAL WALL (2)

3/4" = 1'-0"

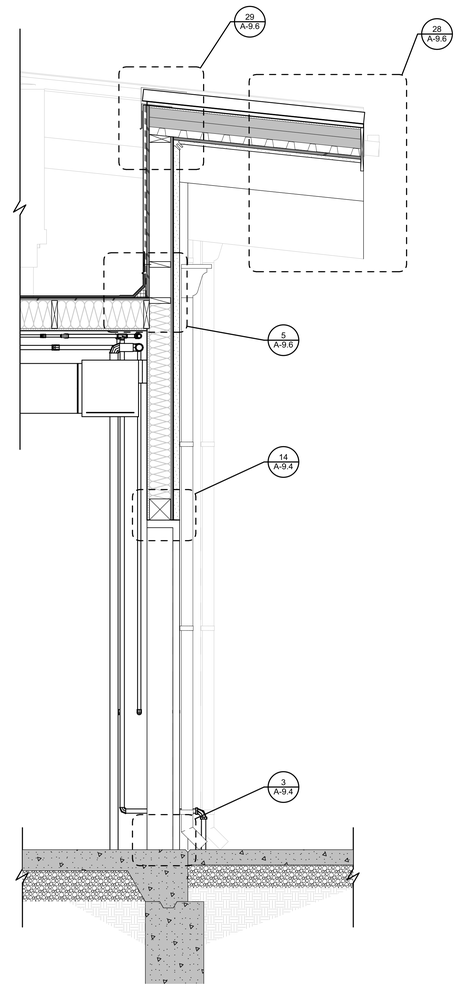

EXT EAST WALL AT MECH WELL (1)

3/4" = 1'-0"

IDENTIFICATION STAMP
DIV. OF THE STATE ARCHITECT
APP: 01-119994 INC:
REVIEWED FOR
SS ☑ FLS ☑ ACS ☑
DATE: 08/16/2022

QUATTROCCHI KWOK ARCHITECTS
Main:
636 Fifth Street, Santa Rosa, CA 95404
East Bay:
55 Harrison Street, Suite 525,
Oakland, CA 94607
(707) 576-0829

LICENSED ARCHITECT
JIM THEISS
LICENSE # C22643
EXP JUNE 30, 2023
STATE OF CALIFORNIA

SIGNED: JUNE 24, 2022

LIBERTY HIGH SCHOOL

NEW CLASSROOM BUILDINGS

850 2ND STREET
BRENTWOOD, CA
94513

LIBERTY UNION HIGH SCHOOL DISTRICT

DSA APP NO. 01-119994

ARCH PROJECT NO:	1925.00
DRAWN BY:	JDS
DRAWING SCALE:	3/4" = 1'-0"
PTN: 61721-83	FILE NO: 7-H4

CONSTRUCTION DOCUMENTS

JUNE 24, 2022

SHEET TITLE

WALL SECTIONS

SHEET NUMBER

A-B6.4

BIMcloud: archiserver - BIMcloud Basic for ARCHICAD 22/1925.00 Liberty HS Classroom_BLDG B_AC22:7/27/2022:5:00 PM

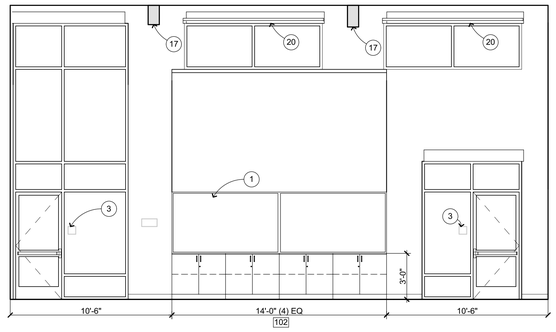

WEST

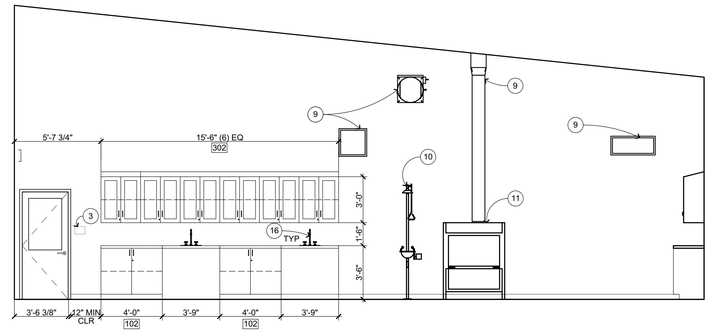

NORTH

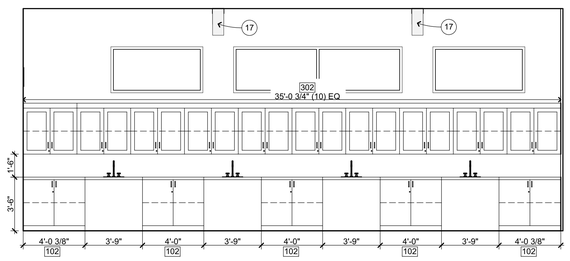

EAST

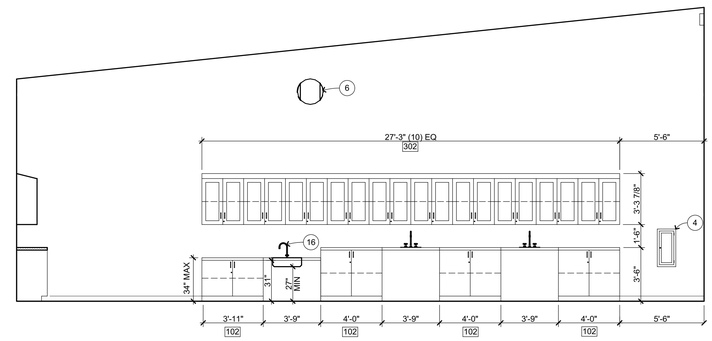

SOUTH

SCIENCE LAB **B101**

1/4" = 1'-0" A-B2.1

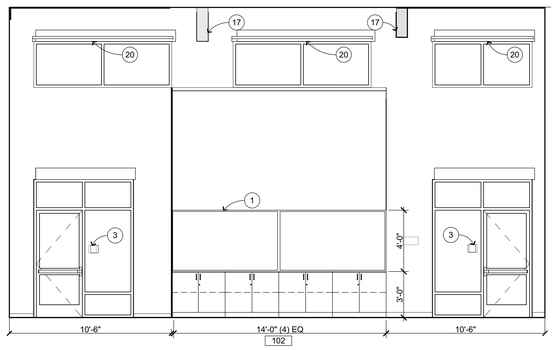

WEST

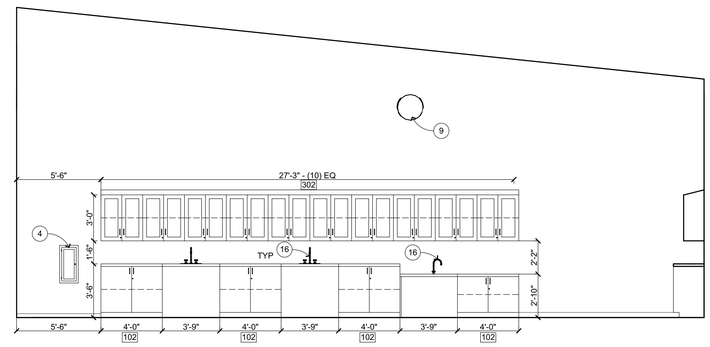

NORTH

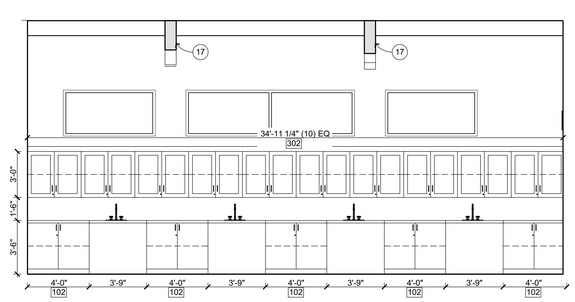

EAST

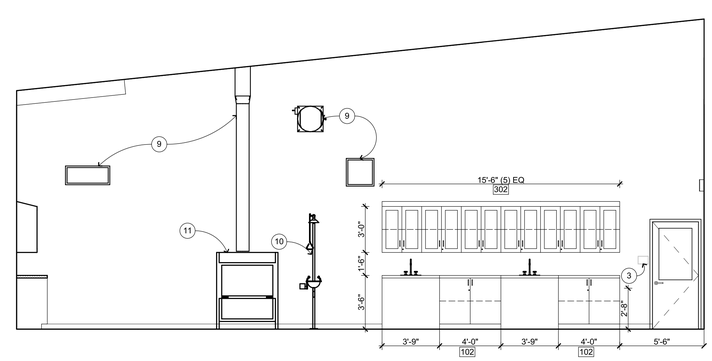

SOUTH

SCIENCE LAB **B103**

1/4" = 1'-0" A-B2.1

INTERIOR ELEVATION KEYNOTES

NOT ALL KEYNOTES MAY APPLY TO THIS SHEET

1. MARKER BOARD CASEWORK
2. WALL MOUNTED SHORT THROW PROJECTOR, OFOI
3. SIGNAGE, SEE 10/A-8.1
4. SEMI-RECESSED FIRE EXTINGUISHER, SEE 23/A-9.3 SIM
5. SOLID FOLDING PARTITION W/ TACKWALL COVERING
6. FOAM WALL PADS
7. TACK-WALL, SEE FIN SCHED
8. MANUAL WINDOW SHADES, SEE 27/A-10.3
9. MECHANICAL ITEM, S.M.D.
10. EYEWASH STATION
11. FUME HOOD
12. CASEWORK, SEE 3/A-10.4
13. OPEN-SHELVING BOOKSHELVES
14. FREE STANDING STAINLESS STEEL SINKS
15. ELECTRICAL ITEM, S.E.D.
16. PLUMBING ITEM, S.P.D.
17. STRUCTURAL ITEM, S.S.D.
18. MOP SINK, S.P.D.
19. ROOF ACCESS LADDER, SEE 24/A-9.7 25/A-9.7
20. MOTORIZED WINDOW SHADES, SEE 28/A-10.3 MTL WD
21. TOILET PARTITION, SEE 17/A-10.3 18/A-10.3
22. 4X8 WALL MOUNTED MARKERBOARD, SEE 34/A-10.3
23. ELECTRICAL APPLIANCE, OFCI

INTERIOR ELEVATION GENERAL NOTES

1. NOTES AND SYMBOLS ARE TO APPLY AT ALL AREAS OF SIMILAR GRAPHIC REPRESENTATION. SUCH INDICATIONS MAY BE LIMITED TO PROMOTE CLARITY OR AVOID REDUNDANCY. NO LIMITATION OF APPLICATION SHALL BE CONSTRUED WITHOUT SPECIFIC NOTATION.
2. REFER TO MECHANICAL DRAWINGS FOR REGISTERS AND VENTS NOT OTHERWISE SHOWN.
3. REFER TO ELECTRICAL DRAWINGS FOR HORNS, SPEAKERS, PULL STATIONS AND OTHER FEATURES NOT OTHERWISE SHOWN.
4. TYPICAL MOUNTING HEIGHTS OF ACCESSIBLE ELEMENTS AT ACCESSIBLE FIXTURES SEE 5/A-10.3
5. FLUSH VALVE HANDLES SHALL BE LOCATED AT THE WIDE SIDE OF ACCESSIBLE STALL.
6. FLOORING & BASE SHALL EXTEND UNDER ACCESSIBLE SINK/LAVATORY BASE CABINETS TO THE WALL. WATER SUPPLY AND DRAINPIPES ACCESSIBLE UNDER LAVATORIES SHALL BE INSULATED OR OTHERWISE COVERED. THERE SHALL BE NO SHARP OR ABRASIVE SURFACES UNDER LAVATORIES.
7. PROVIDE SOLID BLOCKING FOR CABINET, ACCESSORY, OR EQUIPMENT MOUNTING 1/A-10.3 WD FRMG 21/A-10.3 MTL FRMG

WALL FINISH CODES

FOR OVERALL WALL AND BASE FINISHES, SEE FINISH PLANS. FOR MATERIAL INFORMATION, SEE FINISH SCHEDULE SEE SHEET A-8.3. FOR PAINT FINISHES SEE SEC. 09 9113 (EXTERIOR) & 09 9123 (INTERIOR). ALL GYP BD TO BE TYPE 'X'.

P1 P2	PAINT
WT1 WT2	CERAMIC WALL TILE 35/A-10.3
TAC1 TAC2	TACK WALL 9/A-10.3
AP1	ACOUSTIC PANELS
MP1	METAL PERFORATED WALL PANELS
WP1	FRP PANEL
WP3	WALL FOAM PAD
PLY1	3/4" MDO FIRE RATED PLYWOOD

KEY PLAN

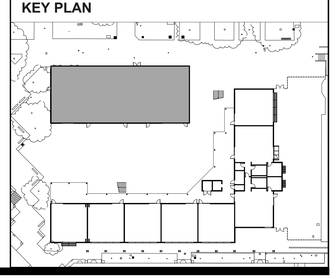

IDENTIFICATION STAMP
DIV. OF THE STATE ARCHITECT
APP: 01-119994 INC:
REVIEWED FOR
SS ☑ FLS ☑ ACS ☑
DATE: 08/16/2022

QUATTROCCHI KWOK ARCHITECTS
Main:
636 Fifth Street, Santa Rosa, CA 95404
East Bay:
55 Harrison Street, Suite 525,
Oakland, CA 94607
(707) 576-0829

LICENSED ARCHITECT
JIM THEISS
LICENSE # C22643
EXP. JUNE 30, 2023
STATE OF CALIFORNIA
SIGNED: JUNE 24, 2022

LIBERTY HIGH SCHOOL

NEW CLASSROOM BUILDINGS

850 2ND STREET
BRENTWOOD, CA
94513

LIBERTY UNION HIGH SCHOOL DISTRICT

DSA APP NO. 01-119994

ARCH PROJECT NO:	1925.00
DRAWN BY:	HD
DRAWING SCALE:	1/8" = 1'-0"
PTN: 61721-83	FILE NO: 7-H4

CONSTRUCTION DOCUMENTS

JUNE 24, 2022

SHEET TITLE

INTERIOR ELEVATIONS

SHEET NUMBER

A-B7.1

BIMcloud: archiserver - BIMcloud Basic for ARCHICAD 22/1925.00 Liberty HS Classroom_BLDG B_AC22.7/27/2022 5:00 PM

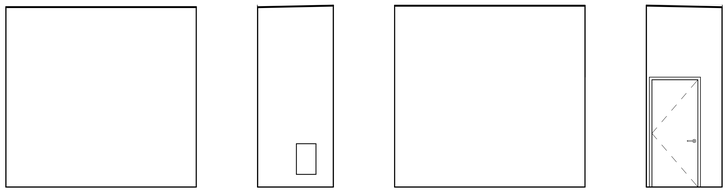

FIRE RISER **B106**
1/4" = 1'-0" A-B2.1

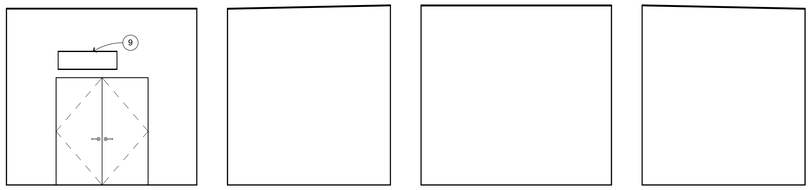

ELECTRICAL **B107**
1/4" = 1'-0" A-B2.1

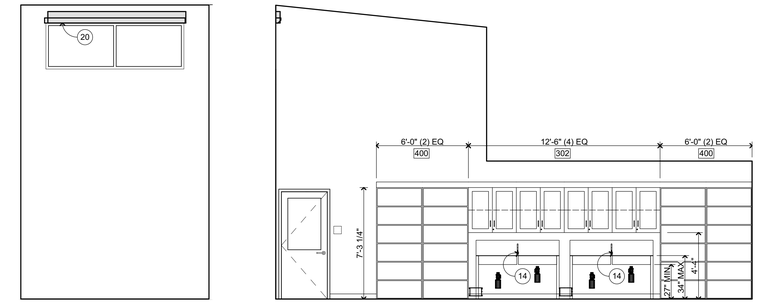

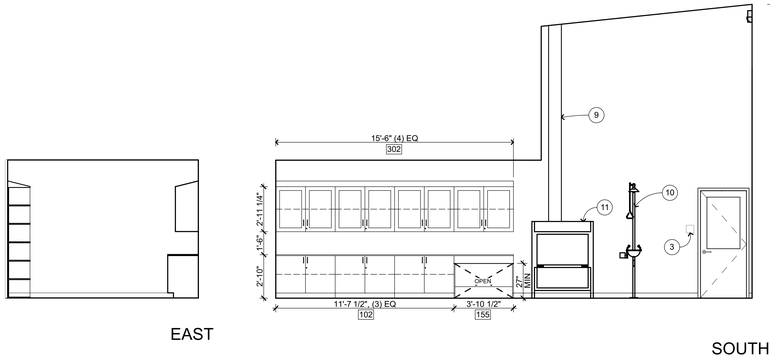

PREP ROOM **B102**
1/4" = 1'-0" A-B2.1

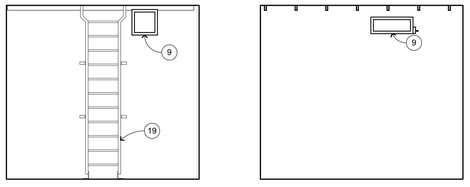

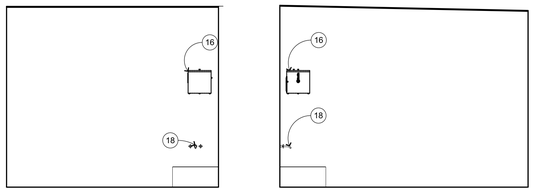

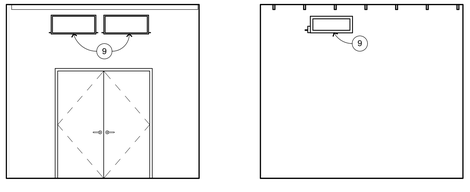

MECHANICAL **B109**
1/4" = 1'-0" A-B2.1

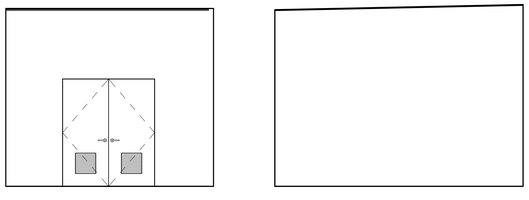

CUSTODIAN ROOM **B108**
1/4" = 1'-0" A-B2.1

INTERIOR ELEVATION KEYNOTES

NOT ALL KEYNOTES MAY APPLY TO THIS SHEET

1. MARKER BOARD CASEWORK
2. WALL MOUNTED SHORT THROW PROJECTOR, OFOI
3. SIGNAGE, SEE 10 / A-8.1
4. SEMI-RECESSED FIRE EXTINGUISHER, SEE 23 / A-9.3 SIM
5. SOLID FOLDING PARTITION W/ TACKWALL COVERING
6. FOAM WALL PADS
7. TACK-WALL, SEE FIN SCHED
8. MANUAL WINDOW SHADES, SEE 27 / A-10.3
9. MECHANICAL ITEM, S.M.D.
10. EYEWASH STATION
11. FUME HOOD
12. CASEWORK, SEE 3 / A-10.4
13. OPEN-SHELVING BOOKSHELVES
14. FREE STANDING STAINLESS STEEL SINKS
15. ELECTRICAL ITEM, S.E.D.
16. PLUMBING ITEM, S.P.D.
17. STRUCTURAL ITEM, S.S.D.
18. MOP SINK, S.P.D.
19. ROOF ACCESS LADDER, SEE 24 / A-9.7 MTL, 25 / A-9.7 WD
20. MOTORIZED WINDOW SHADES, SEE 28 / A-10.3
21. TOILET PARTITION, SEE 17 / A-10.3, 18 / A-10.3
22. 4X8 WALL MOUNTED MARKERBOARD, SEE 34 / A-10.3
23. ELECTRICAL APPLIANCE, OFCI

INTERIOR ELEVATION GENERAL NOTES

1. NOTES AND SYMBOLS ARE TO APPLY AT ALL AREAS OF SIMILAR GRAPHIC REPRESENTATION. SUCH INDICATIONS MAY BE LIMITED TO PROMOTE CLARITY OR AVOID REDUNDANCY. NO LIMITATION OF APPLICATION SHALL BE CONSTRUED WITHOUT SPECIFIC NOTATION.
2. REFER TO MECHANICAL DRAWINGS FOR REGISTERS AND VENTS NOT OTHERWISE SHOWN.
3. REFER TO ELECTRICAL DRAWINGS FOR HORNS, SPEAKERS, PULL STATIONS AND OTHER FEATURES NOT OTHERWISE SHOWN.
4. TYPICAL MOUNTING HEIGHTS OF ACCESSIBLE ELEMENTS AT ACCESSIBLE FIXTURES SEE 5 / A-10.3
5. FLUSH VALVE HANDLES SHALL BE LOCATED AT THE WIDE SIDE OF ACCESSIBLE STALL.
6. FLOORING & BASE SHALL EXTEND UNDER ACCESSIBLE SINK/LAVATORY BASE CABINETS TO THE WALL. WATER SUPPLY AND DRAINPIPES ACCESSIBLE UNDER LAVATORIES SHALL BE INSULATED OR OTHERWISE COVERED. THERE SHALL BE NO SHARP OR ABRASIVE SURFACES UNDER LAVATORIES.
7. PROVIDE SOLID BLOCKING FOR CABINET, ACCESSORY, OR EQUIPMENT MOUNTING 1 / A-10.3 WD FRMG, 21 / A-10.3 MTL FRMG

WALL FINISH CODES

FOR OVERALL WALL AND BASE FINISHES, SEE FINISH PLANS. FOR MATERIAL INFORMATION, SEE FINISH SCHEDULE SEE SHEET A-8.3. FOR PAINT FINISHES SEE SEC. 09 9113 (EXTERIOR) & 09 9123 (INTERIOR).
ALL GYP BD TO BE TYPE 'X'.

P1 P2	PAINT
WT1 WT2	CERAMIC WALL TILE 35 / A-10.3
TAC1 TAC2	TACK WALL 9 / A-10.3
AP1	ACOUSTIC PANELS
MP1	METAL PERFORATED WALL PANELS
WP1	FRP PANEL
WP3	WALL FOAM PAD
PLY1	3/4" MDO FIRE RATED PLYWOOD

KEY PLAN

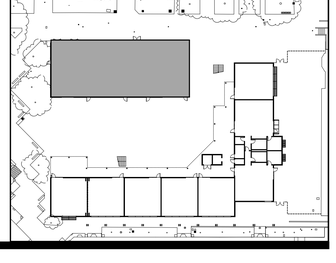

IDENTIFICATION STAMP
DIV. OF THE STATE ARCHITECT
APP: 01-119994 INC:
REVIEWED FOR
SS ☑ FLS ☑ ACS ☑
DATE: 08/16/2022

QUATTROCCHI KWOK ARCHITECTS
Main:
636 Fifth Street, Santa Rosa, CA 95404
East Bay:
55 Harrison Street, Suite 525,
Oakland, CA 94607
(707) 576-0829

LICENSED ARCHITECT
JIM THEISS
LICENSE # C22643
EXP. JUNE 30, 2023
STATE OF CALIFORNIA
SIGNED: JUNE 24, 2022

LIBERTY HIGH SCHOOL

NEW CLASSROOM BUILDINGS

850 2ND STREET
BRENTWOOD, CA
94513

LIBERTY UNION HIGH SCHOOL DISTRICT

DSA APP NO. 01-119994
ARCH PROJECT NO: 1925.00
DRAWN BY: HD
DRAWING SCALE: 1/8" = 1'-0"
PTN: 61721-83 FILE NO: 7-H4
CONSTRUCTION DOCUMENTS
JUNE 24, 2022

SHEET TITLE
INTERIOR ELEVATIONS

SHEET NUMBER
A-B7.2

BIMcloud: archiserver - BIMcloud Basic for ARCHICAD 22/1925.00 Liberty HS Classroom BLDG B_AC22 7/27/2022 5:00 PM

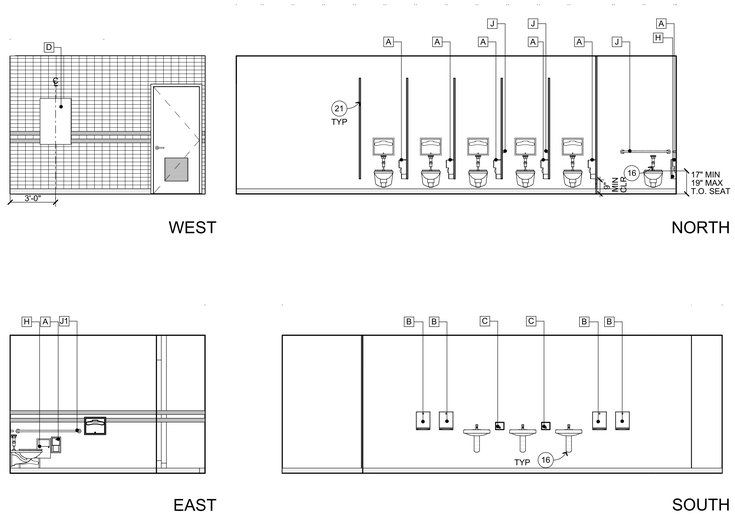

GIRLS RESTROOM **B104**

1/4" = 1'-0" A-B2.1

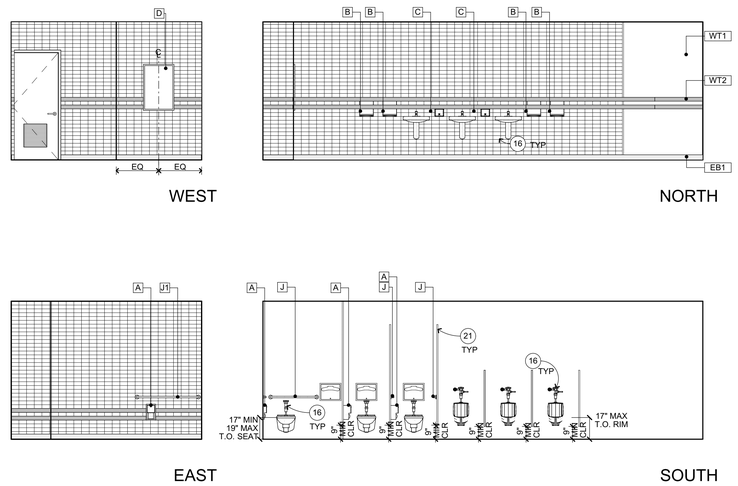

BOYS RESTROOM **B105**

1/4" = 1'-0" A-B2.1

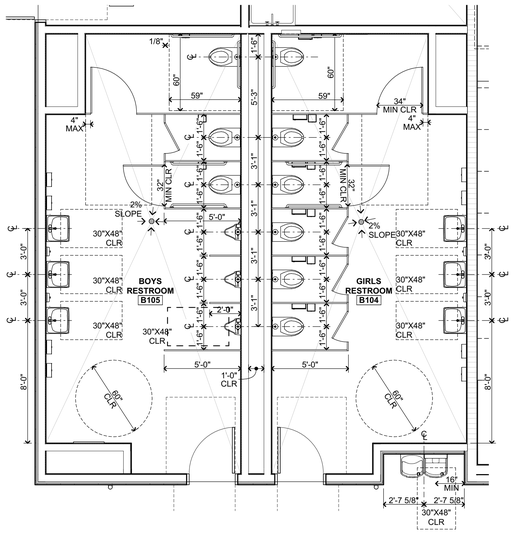

ENLARGED RESTROOM PLAN 1

1/4" = 1'-0"

INTERIOR ELEVATION KEYNOTES

NOT ALL KEYNOTES MAY APPLY TO THIS SHEET

1. MARKER BOARD CASEWORK
2. WALL MOUNTED SHORT THROW PROJECTOR, OFOI
3. SIGNAGE, SEE 10/A-8.1
4. SEMI-RECESSED FIRE EXTINGUISHER, SEE 23/A-9.3 SIM
5. SOLID FOLDING PARTITION W/ TACKWALL COVERING
6. FOAM WALL PADS
7. TACK-WALL, SEE FIN SCHED
8. MANUAL WINDOW SHADES, SEE 27/A-10.3
9. MECHANICAL ITEM, S.M.D.
10. EYEWASH STATION
11. FUME HOOD
12. CASEWORK, SEE 3/A-10.4
13. OPEN-SHELVING BOOKSHELVES
14. FREE STANDING STAINLESS STEEL SINKS
15. ELECTRICAL ITEM, S.E.D.
16. PLUMBING ITEM, S.P.D.
17. STRUCTURAL ITEM, S.S.D.
18. MOP SINK, S.P.D.
19. ROOF ACCESS LADDER, SEE 24/A-9.7 25/A-9.7 MTL WD
20. MOTORIZED WINDOW SHADES, SEE 28/A-10.3
21. TOILET PARTITION, SEE 17/A-10.3 18/A-10.3
22. 4X8 WALL MOUNTED MARKERBOARD, SEE 34/A-10.3
23. ELECTRICAL APPLIANCE, OFCI

INTERIOR ELEVATION GENERAL NOTES

1. NOTES AND SYMBOLS ARE TO APPLY AT ALL AREAS OF SIMILAR GRAPHIC REPRESENTATION. SUCH INDICATIONS MAY BE LIMITED TO PROMOTE CLARITY OR AVOID REDUNDANCY. NO LIMITATION OF APPLICATION SHALL BE CONSTRUED WITHOUT SPECIFIC NOTATION.
2. REFER TO MECHANICAL DRAWINGS FOR REGISTERS AND VENTS NOT OTHERWISE SHOWN.
3. REFER TO ELECTRICAL DRAWINGS FOR HORNS, SPEAKERS, PULL STATIONS AND OTHER FEATURES NOT OTHERWISE SHOWN.
4. TYPICAL MOUNTING HEIGHTS OF ACCESSIBLE ELEMENTS AT ACCESSIBLE FIXTURES SEE 5/A-10.3
5. FLUSH VALVE HANDLES SHALL BE LOCATED AT THE WIDE SIDE OF ACCESSIBLE STALL.
6. FLOORING & BASE SHALL EXTEND UNDER ACCESSIBLE SINK/LAVATORY BASE CABINETS TO THE WALL. WATER SUPPLY AND DRAINPIPES ACCESSIBLE UNDER LAVATORIES SHALL BE INSULATED OR OTHERWISE COVERED. THERE SHALL BE NO SHARP OR ABRASIVE SURFACES UNDER LAVATORIES.
7. PROVIDE SOLID BLOCKING FOR CABINET, ACCESSORY, OR EQUIPMENT MOUNTING 1/A-10.3 WD FRMG 21/A-10.3 MTL FRMG

WALL FINISH CODES

FOR OVERALL WALL AND BASE FINISHES, SEE FINISH PLANS. FOR MATERIAL INFORMATION, SEE FINISH SCHEDULE SEE SHEET A-8.3. FOR PAINT FINISHES SEE SEC. 09 9113 (EXTERIOR) & 09 9123 (INTERIOR).
ALL GYP BD TO BE TYPE 'X'.

P1 P2	PAINT
WT1 WT2	CERAMIC WALL TILE — 35/A-10.3
TAC1 TAC2	TACK WALL — 9/A-10.3
AP1	ACOUSTIC PANELS
MP1	METAL PERFORATED WALL PANELS
WP1	FRP PANEL
WP3	WALL FOAM PAD
PLY1	3/4" MDO FIRE RATED PLYWOOD

TOILET ROOM ACCESSORY SCHEDULE

A	TOILET PAPER DISPENSER, RECESSED (3" MAXIMUM PROJECTION)
B	PAPER TOWEL DISPENSER, RECESSED
C	SOAP DISPENSER, SURFACE MOUNTED
D	MIRROR (TYP), FOR ATTACHMENT SEE 12/A-10.3 WD FRMG 22/A-10.3 MTL FRMG
E	TOILET SEAT COVER DISPENSER, RECESSED
F	ELECTRIC HAND DRYER, SURFACE MOUNTED
G	SANITARY NAPKIN RECEPTACLE, RECESSED (3" MAXIMUM PROJECTION)
H	SANITARY NAPKIN DISPENSER, RECESSED (3" MAXIMUM PROJECTION)
J	36" GRAB BAR, FOR ATTACHMENT SEE 6/A-10.3 WD FRMG 26/A-10.3 MTL FRMG
J1	48" GRAB BAR, FOR ATTACHMENT SEE
K	ACCESSIBLE CHANGING TABLE

KEY PLAN

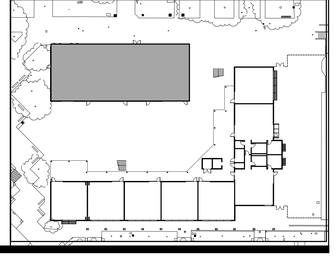

IDENTIFICATION STAMP
DIV. OF THE STATE ARCHITECT
APP: 01-119994 INC:
REVIEWED FOR
SS ☑ FLS ☑ ACS ☑
DATE: 08/16/2022

QUATTROCCHI KWOK ARCHITECTS
Main:
636 Fifth Street, Santa Rosa, CA 95404
East Bay:
55 Harrison Street, Suite 525,
Oakland, CA 94607
(707) 576-0829

LICENSED ARCHITECT
JIM THEISS
LICENSE # C22643
EXP JUNE 30, 2023
STATE OF CALIFORNIA

SIGNED: JUNE 24, 2022

LIBERTY HIGH SCHOOL

NEW CLASSROOM BUILDINGS

850 2ND STREET
BRENTWOOD, CA
94513

LIBERTY UNION HIGH SCHOOL DISTRICT

DSA APP NO. 01-119994

ARCH PROJECT NO:	1925.00
DRAWN BY:	HD
DRAWING SCALE:	1/8" = 1'-0"
PTN: 61721-83	FILE NO: 7-H4

CONSTRUCTION DOCUMENTS

JUNE 24, 2022

SHEET TITLE

ENLARGED RESTROOM PLANS AND INTERIOR ELEVATIONS

SHEET NUMBER

A-B7.3

BIMcloud: archiserver - BIMcloud Basic for ARCHICAD 22/1925.00 Liberty HS Classroom, BLDG B, AC22:7/27/2022:5:00 PM

DOOR SCHEDULE

Element ID	TYPE	DOOR SIZE	DOOR MAT	DOOR FIN	FRAME TYPE	FRAME MAT	FRAME FIN	LOUVER SIZE	LABEL	HDWR	P. H.	REMARKS
A101	F	3'-0" x 7'-0"	ALUM	FAC FIN	SF10	ALUM	FAC FIN		-	1	PH	
A102	F	3'-0" x 7'-0"	ALUM	FAC FIN	SF11	ALUM	FAC FIN		-	1	PH	
A103	F	3'-0" x 7'-0"	ALUM	FAC FIN	SF11	ALUM	FAC FIN		-	1	PH	
A104	F	3'-0" x 7'-0"	ALUM	FAC FIN	SF11	ALUM	FAC FIN		-	2	PH	
A105	F	3'-0" x 7'-0"	ALUM	FAC FIN	SF10	ALUM	FAC FIN		-	2	PH	
A106A	F	3'-0" x 7'-0"	ALUM	FAC FIN	SF13	ALUM	FAC FIN		-	2	PH	
A106AA	A	3'-0" x 7'-0"	WOOD	STAIN	1	H.M.	PAINT		-	3		
A106B	F	3'-0" x 7'-0"	ALUM	FAC FIN	SF10	ALUM	FAC FIN		-	1	PH	
A106BA	D	3'-0" x 7'-0"	WOOD	STAIN	1	H.M.	PAINT		-	4		
A106C	D	3'-0" x 7'-0"	WOOD	STAIN	1	H.M.	PAINT		-	5		
A107	B	3'-0" x 7'-0"	H.M.	PAINT	1	H.M.	PAINT	1'-0" x 1'-0"	-	6		
A108	A	3'-0" x 7'-0"	H.M.	PAINT	1	H.M.	PAINT		-	6	PH	
A109A	D	3'-0" x 7'-0"	WOOD	STAIN	1	H.M.	PAINT		-	4		
A110A	F	3'-0" x 7'-0"	ALUM	FAC FIN	SF10	ALUM	FAC FIN		-	1	PH	
A110AA	A	3'-0" x 7'-0"	WOOD	STAIN	1	H.M.	PAINT		-	3		
A110B	F	3'-0" x 7'-0"	ALUM	FAC FIN	SF11	ALUM	FAC FIN		-	1	PH	
A110BA	D	3'-0" x 7'-0"	WOOD	STAIN	1	H.M.	PAINT		-	4		
A111A	F	3'-0" x 7'-0"	ALUM	FAC FIN	SF10	ALUM	FAC FIN		-	1	PH	
A112	A	3'-6" x 7'-0"	H.M.	PAINT	1	H.M.	PAINT		-	6		
A201	F	3'-0" x 7'-0"	ALUM	FAC FIN	SF10	ALUM	FAC FIN		-	1	PH	
A202	F	3'-0" x 7'-0"	ALUM	FAC FIN	SF11	ALUM	FAC FIN		-	1	PH	
A203	F	3'-0" x 7'-0"	ALUM	FAC FIN	SF11	ALUM	FAC FIN		-	1	PH	
A204	F	3'-0" x 7'-0"	ALUM	FAC FIN	SF11	ALUM	FAC FIN		-	2	PH	
A205	F	3'-0" x 7'-0"	ALUM	FAC FIN	SF10	ALUM	FAC FIN		-	2	PH	
A206	F	3'-0" x 7'-0"	ALUM	FAC FIN	SF13	ALUM	FAC FIN		-	2	PH	
A207	A	3'-0" x 7'-0"	H.M.	PAINT	1	H.M.	PAINT		-	6		
A208	F	3'-0" x 7'-0"	ALUM	FAC FIN	SF13	ALUM	FAC FIN		-	2	PH	
A208A	A	3'-0" x 7'-0"	WOOD	STAIN	1	H.M.	PAINT		-	7		
A208B	A	3'-0" x 7'-0"	WOOD	STAIN	4	H.M.	PAINT		-	4		
A209	F	3'-0" x 7'-0"	ALUM	FAC FIN	SF10	ALUM	FAC FIN		-	2	PH	
A210	F	3'-0" x 7'-0"	ALUM	FAC FIN	SF10	ALUM	FAC FIN		-	1	PH	
B101A	F	3'-0" x 7'-0"	ALUM	FAC FIN	CW01	ALUM	FAC FIN		-	2	PH	
B101B	F	3'-0" x 7'-0"	ALUM	FAC FIN	SF13	ALUM	FAC FIN		-	1	PH	
B102A	D	3'-0" x 7'-0"	WOOD	STAIN	1	H.M.	PAINT		45-MIN	8		ADD "D-H" LABEL
B102B	D	3'-0" x 7'-0"	WOOD	STAIN	1	H.M.	PAINT		45-MIN	8		ADD "D-H" LABEL
B103A	F	3'-0" x 7'-0"	ALUM	FAC FIN	SF14	ALUM	FAC FIN		-	1	PH	
B103B	F	3'-0" x 7'-0"	ALUM	FAC FIN	SF13	ALUM	FAC FIN		-	1	PH	
B104	B	3'-0" x 7'-0"	H.M.	PAINT	1	H.M.	PAINT	1'-6" x 1'-6"	-	10		
B105	B	3'-0" x 7'-0"	H.M.	PAINT	1	H.M.	PAINT	1'-6" x 1'-6"	-	10		
B106	A	3'-0" x 7'-0"	H.M.	PAINT	1	H.M.	PAINT		-	6		
B107	A	PR - 3'-0" x 7'-0"	H.M.	PAINT	2	H.M.	PAINT		-	9		
B108	B	PR - 3'-0" x 7'-0"	H.M.	PAINT	2	H.M.	PAINT	1'-4" x 1'-4"	-	9		
B109	A	PR - 3'-0" x 7'-0"	H.M.	PAINT	2	H.M.	PAINT		-	9		

GATE SCHEDULE

ID	GATE TYPE	WIDTH	HEIGHT	HDWR GROUP	DETAIL	REMARKS
G01	DOUBLE-GATE	6'-0"	8'-0"	12		
G02	SINGLE-GATE	3'-0"	8'-0"	11		
G03	DOUBLE-GATE	6'-0"	8'-0"	12		
G04	DOUBLE-GATE	6'-0"	8'-0"	12		

DOOR PANEL TYPES

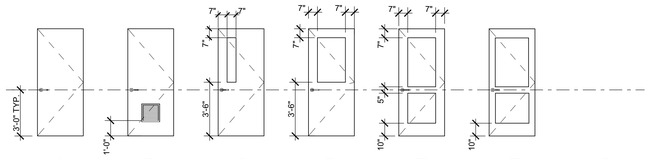

A — FLUSH

B — FLUSH W/ LOUVER SIZE PER SCHEDULE

C — FLUSH W/ VISION LITE
3'-7" MAX FIN FLR TO VISION LITE, TYP

D — FLUSH W/ HALF LITE

E — FLUSH W/ FULL LITE

F — ALUMINUM ENTRANCE DIMENSIONS PER MANUF.

G — NOT USED

H — NOT USED

J — NOT USED

1. ALL EXIT DOORS IN SCHOOL BUILDINGS, INCLUDING BUT NOT LIMITED TO DOORS OF TOILET ROOMS AND STORAGE ROOMS SHALL CONFORM TO CBC 1010. EXIT DOORS SHALL BE OPERABLE FROM THE INSIDE WITHOUT THE USE OF A KEY, OR SPECIAL KNOWLEDGE OR EFFORT.
2. EXIT DEVICES (PANIC HARDWARE) SHALL BE INSTALLED IN CONFORMANCE WITH CBC 1010.1.10. PANIC HARDWARE IS REQUIRED FROM ROOMS AND CORRIDORS OF A OR E OCCUPANCY WHERE OCCUPANT LOAD EXCEEDS 50 PER CBC 1010.1.10
3. ALL DOORS AT E OCCUPANCY WITH AN OCCUPANT LOAD GREATER THAN 5 SHALL BE LOCKABLE FROM THE INSIDE.
4. DOORS WITH CLOSERS SHALL BE ADJUSTED TO PROVIDE MINIMUM DOOR CLOSER PERIOD OF FIVE SECONDS FROM A POSITION OF 90 DEGREES TO WITHIN 12 DEGREES OF THE DOOR LATCH, MEASURED FROM THE LEADING EDGE OF THE DOOR.
5. MAXIMUM EFFORT TO OPERATE DOORS SHALL NOT EXCEED 5 POUNDS APPLIED IN THE DIRECTION OF TRAVEL. REQUIRED FIRE DOORS SHALL HAVE A MAXIMUM OPERATING EFFORT NOT TO EXCEED 15 POUNDS. THESE FORCES DO NOT APPLY TO THE FORCE REQUIRED TO RETRACT LATCH BOLTS OR DISENGAGE OTHER DEVICES THAT HOLD THE DOOR OR GATE IN A CLOSED POSITION.
6. SEE ARCHITECTURAL SIGNAGE DRAWINGS FOR SIGNS ON DOORS AND SIGNS RELATED TO ENTRANCE AND EXIT. REFER TO SITE PLAN FOR SITE SIGNAGE.

DOOR GENERAL NOTES (1)

1/4" = 1'-0" Z101005

HOLLOW METAL DOOR FRAME TYPES

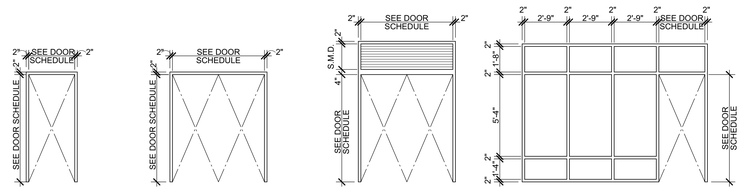

1 — HOLLOW METAL FRAME

2 — HOLLOW METAL FRAME

3 — HOLLOW METAL FRAME W/ TRANSOM LOUVER

4 — HOLLOW METAL FRAME W/ SIDELIGHTS

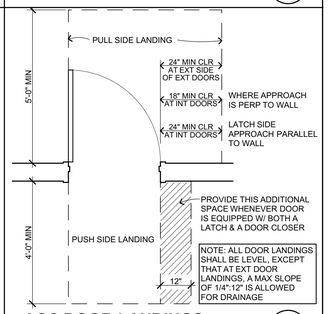

ACC DOOR LANDINGS (2)

1/2" = 1'-0" B203301

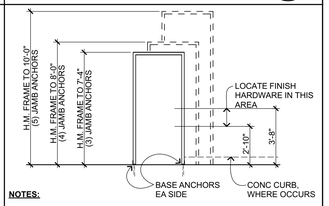

NOTES:

1. PROVIDE DOOR FRAME ANCHORAGE AS FOLLOWS: PROVIDE A MINIMUM OF (3) FRAME ANCHORS AT EA JAMB OF DOOR FRAMES AT 24" O.C. MAX WITHIN 18" OF TOP AND BOTTOM. JAMB ANCHORS TO BE SPACED EQUALLY.
2. ATTACHANCHORS TO WOOD FRAMING WITH #8 F.H.W.S., 1 1/2" MINIMUM PENETRATION.
3. BASE ANCHORS ARE ADDITIONAL TO THE NUMBER OF JAMB ANCHORS INDICATED ON THIS DIAGRAM. SEE 3/A-8.1

HM FRAME ANCHORAGE (3)

1/4" = 1'-0" B203106

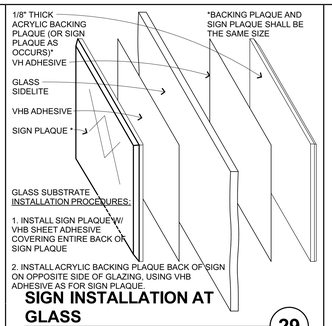

INSTALLATION PROCEDURES:

1. INSTALL SIGN PLAQUE W/ VHB SHEET ADHESIVE COVERING ENTIRE BACK OF SIGN PLAQUE
2. INSTALL ACRYLIC BACKING PLAQUE BACK OF SIGN ON OPPOSITE SIDE OF GLAZING, USING VHB ADHESIVE AS FOR SIGN PLAQUE.

SIGN INSTALLATION AT GLASS (29)

6" = 1'-0" C103304

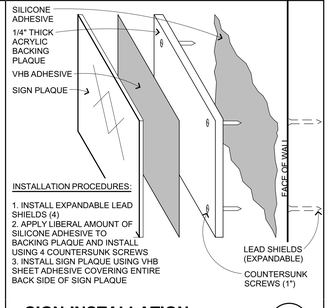

INSTALLATION PROCEDURES:

1. INSTALL EXPANDABLE LEAD SHIELDS (4)
2. APPLY LIBERAL AMOUNT OF SILICONE ADHESIVE TO BACKING PLAQUE AND INSTALL USING 4 COUNTERSUNK SCREWS
3. INSTALL SIGN PLAQUE USING VHB SHEET ADHESIVE COVERING ENTIRE BACK SIDE OF SIGN PLAQUE

SIGN INSTALLATION (30)

6" = 1'-0" C1033301

MINIMUM CBC REQUIREMENTS.

TYPICAL PLAQUE NOTES U.O.N.

NON-GLARE FINISH PLAQUES WITH TACTILE CONTRACTED SYMBOLS (RAISED 1/32") INCLUDES CALIFORNIA CONTRACTED GRADE 2 BRAILLE RAISED 1/40" PER CBC REQUIREMENTS. SAN SERIF FONT SELECTION SHALL HAVE THE WIDTH OF THE UPPERCASE LETTER "O" IS 60% MIN AND 110% MAX OF THE HEIGHT OF THE UPPERCASE LETTER "I". A STROKE WIDTH TO HEIGHT OF THE UPPERCASE LETTER "I" SHALL BE 10% MAX OF HT OF CHARACTER.

CUSTOM COLORS, LAYOUT & LETTER STYLES TO BE SELECTED & APPROVED BY ARCHITECT. SIGNAGE SYMBOLS, BACKGROUND, MOUNTING SURFACE TO CONTRAST, 70% MINIMUM CONTRAST.

WHERE SIGN PLAQUES ARE PLACED ON GLASS, ANY BACKING PLAQUE OR SIGN IS TO BE THE SAME SIZE.

TEXT

TEXT SIZE*
5/8" MIN. TEXT (48 PT)
2" MAX.

TYP DIM TEXT & BRAILLE

RAISED TEXT — 3/8" MIN 1/2" MAX

* FOR WALL MOUNTED SIGNS WHICH MAY BE VIEWED W/O OBSTRUCTION. BASED ON HT OF UPPERCASE LETTER "I")

MOUNTING OF SIGNS

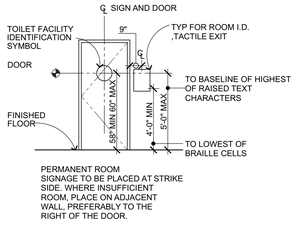

A1 ACCESSIBLE ENTRANCE SIGN

VINYL, 6"X6" BACKING WITH VINYL SYMBOL. BLUE BACKGROUND WITH WHITE SYMBOL. PROVIDE AT MAIN ENTRANCE AND AS NOTED.

STRIKE SIDE TOILET ROOM SIGNAGE

(PLAQUE NOTES TYP FOR EACH SIGN)

PROVIDE AT ACCESSIBLE TOILET ROOMS.

USE "GIRLS" & BOYS" WHERE TOILET ROOMS ARE PRIMARILY USED BY CHILDREN.

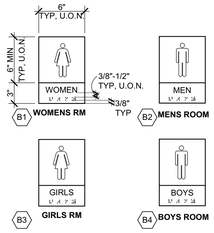

B1 WOMENS RM — B2 MENS ROOM — B3 GIRLS RM — B4 BOYS ROOM — B5 GENDER NEUTRAL

TOILET ROOM DOOR SIGNAGE

(NOTES TYP FOR EACH SIGN)

PROVIDE AT ACCESSIBLE TOILET ROOMS.

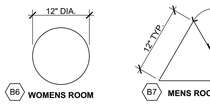

B6 WOMENS ROOM — B7 MENS ROOM

B8 GENDER NEUTRAL

UNISEX TOILET FACILITY IDENTIFICATION SYMBOLS

CIRCLE, 12 INCHES IN DIAMETER WITH AN EQUILATERAL TRIANGLE 1/4" THICK SUPERIMPOSED ON THE CIRCLE AND WITHIN THE 12 INCH DIAMETER VERTEX POINTING UPWARD. COLOR OF TRIANGLE SHALL CONTRAST WITH COLOR OF CIRCLE: COLOR OF CIRCLE SHALL CONTRAST WITH COLOR OF DOOR.70% MINIMUM CONTRAST.

- DOUBLE STICK FOAM TAPE ADHESIVE. SEE PLANS FOR LOCATIONS.
- PROVIDE AT ACCESSIBLE TOILET ROOM DOOR CENTERED AT 60" HIGH. SEE ACCOMPANYING DIAGRAM.

A2 LIFT SIGNAGE

LAYOUT AND LETTER STYLE TO BE SELECTED & APPROVED BY ARCHITECT.

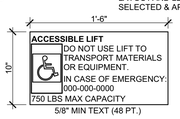

F1 FIRE RISER ROOM SIGN

"FIRE RISER INSIDE"

POST AS INDICATED ON INTERIOR AND EXTERIOR DOORS TO FIRE RISER ROOMS. CENTER ON DOOR. NO BRAILLE REQUIRED FOR THIS SIGN. LETTERING SHALL BE IN CONTRASTING COLOR WITH A MINIMUM STROKE OF 3/8 INCH

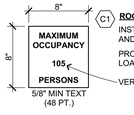

C1 ROOM OCCUPANCY SIGNAGE

INSTALLATION LOCATION PER PLANS AND CBC REQUIREMENTS.

PROVIDE AT ALL ROOMS W/ OCCUPANT LOADS GREATER THAN 50

VERIFY ACTUAL # W/ ARCHITECT

C2 ASSISTIVE LISTENING SIGN

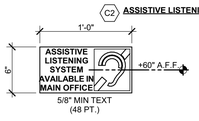

D1 E1 E2 SIGNAGE SIZES TO MATCH, MODIFY AS REQUIRED

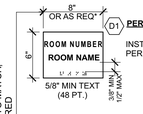

D1 PERMANENT ROOM I.D. SIGNAGE

INSTALL NEXT TO ENTRANCE DOORS, PER CBC REQUIREMENTS.

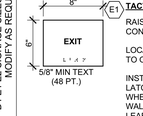

E1 TACTILE EXIT SIGN AT ALL EXIT DOORS

RAISED LETTERS "EXIT". BRAILLE "EXIT". CONTRACTED GRADE 2 BRAILLE

LOCATED AT ALL EXIT DOORS IN ADDITION TO OVERHEAD, ILLUMINATED EXIT SIGNS.

INSTALL ON THE WALL ADJACENT TO THE LATCH ON THE OUTSIDE OF THE DOOR WHERE THERE IS NO WALL SPACE ON THE WALL LATCH SIDE INCLUDING AT DOUBLE LEAF DOORS. SIGNS SHALL BE PLACED ON THE NEAREST ADJACENT WALL, PREFERABLY ON THE RIGHT SIDE.

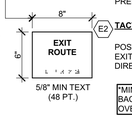

E2 TACTILE EXIT ROUTE SIGN

POST AS INDICATED AT DOORS TO EXIT ROUTE THAT DO NOT LEAD DIRECTLY TO THE EXTERIOR

*MIN DIMENSIONS SHOWN, WHERE BACK TO BACK SIGNS ARE APPLIED OVER GLASS, WIDTHS TO MATCH.

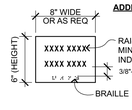

ADDITIONAL ROOM ID AND SIGNAGE

RAISED CHARACTERS (ALL CAPS) 5/8" MIN TEXT (48PT) 2" MAX (OR AS INDICATED BELOW)

3/8"-1/2" B/T RAISED CHARACTERS AND BRAILLE

F1 **FIRE RISER ROOM SIGN** "FIRE RISER INSIDE"	POST AS INDICATED AT INTERIOR AND EXTERIOR DOORS TO FIRE RISER ROOMS
G1 **ELEVATOR MACHINE ROOM SIGN** "NO COMBUSTIBLE STORAGE PERMITTED IN THIS ROOM"	POST INSIDE ELEVATOR MACHINE ROOM IN A CONSPICUOUS LOCATION, MIN OF 1.5" HIGH LETTERS ON A CONSTRASTING BACKGROUND. NO BRAILLE FOR THIS SIGN ONLY.
H1 **AREA OF RESCUE ASSISTANCE SIGN** "AREA OF RESCUE ASSISTANCE"	POST ABOVE TWO-WAY COMMUNICATION DEVICE AT ELEVATOR

ACCESSIBLE SIGNAGE (10)

1/4" = 1'-0" C103332-2019

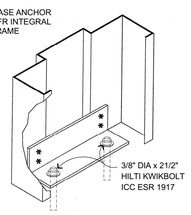

HM FRAME BASE ANCHOR (4)

3" = 1'-0" B203106.1

1. ALL INTERIOR GLAZING SHALL BE 1/4" CLEAR TEMPERED, U.O.N.
2. ALL EXTERIOR GLAZING SHALL BE INSULATED GLASS UNITS W/ 1/4" TEMPERED GLASS, U.O.N.
3. PROVIDE RATED GLASS AT RATED ASSEMBLIES IN ACCORDANCE WITH CBC CHAPTERS 7 AND 24.
4. FOR DETAILED DOOR AND WINDOW GLAZING INFORMATION REFER TO SPECIFICATION SECTION 08 8000.

GLAZING GENERAL NOTES (5)

1/4" = 1'-0" Z101013

IDENTIFICATION STAMP
DIV. OF THE STATE ARCHITECT
APP: 01-119994 INC:
REVIEWED FOR
SS ☑ FLS ☑ ACS ☑
DATE: 08/16/2022

QUATTROCCHI KWOK ARCHITECTS
Main:
636 Fifth Street, Santa Rosa, CA 95404
East Bay:
55 Harrison Street, Suite 525, Oakland, CA 94607
(707) 576-0829

LICENSED ARCHITECT — JIM THEISS — LICENSE # C22643 — EXP JUNE 30, 2023 — STATE OF CALIFORNIA

SIGNED: JUNE 24, 2022

LIBERTY HIGH SCHOOL

NEW CLASSROOM BUILDINGS

850 2ND STREET
BRENTWOOD, CA
94513

LIBERTY UNION HIGH SCHOOL DISTRICT

DSA APP NO.	01-119994
ARCH PROJECT NO:	1925.00
DRAWN BY:	JDS
DRAWING SCALE:	AS SHOWN
PTN: 61721-83	FILE NO: 7-H4

CONSTRUCTION DOCUMENTS

JUNE 24, 2022

SHEET TITLE

DOOR SCHEDULE AND SIGNAGE

SHEET NUMBER

A-8.1

BIMcloud: archiserver - BIMcloud Basic for ARCHICAD 22/1925.00 Liberty HS Classroom, BLDG A, AC22-7/27/2022-5:32 PM

ALUMINUM STOREFRONT TYPES

ALL BUILDINGS

ALUMINUM FRAMING IS 2x4" TYP, U.N.O. ALL ALUMINUM STOREFRONTS AND CURTAINWALLS SHALL BE SUBMITTED AS A DEFFERRED SUBMITAL.
REFER TO 5/A-8.1 AND SPEC SECTION 08 8000 FOR ADDITIONAL NOTES AND INFORMATION NOT INDICATED

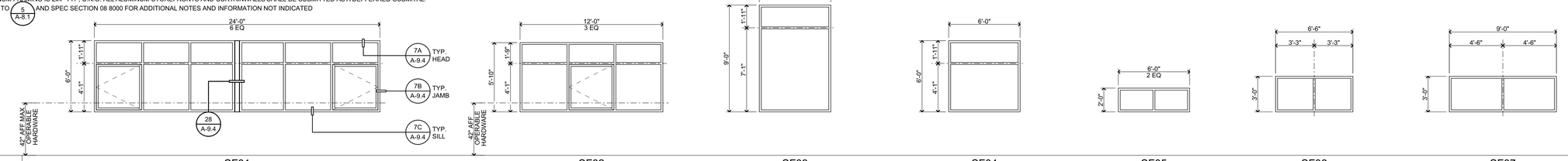

	SF01	SF02	SF03	SF04	SF05	SF06	SF07
TYPE	ALUMINUM STOREFRONT	ALUMINUM STOREFRONT	ALUMINUM STOREFRONT	ALUMINUM STOREFRONT	ALUMINUM STOREFRONT	ALUMINUM STOREFRONT	ALUMINUM STOREFRONT
GLAZING	DUAL GLAZED	DUAL GLAZED	DUAL GLAZED	DUAL GLAZED	DUAL GLAZED	DUAL GLAZED	DUAL GLAZED
OPERATION	(2) CASEMENT SASHES	CASEMENT SASH	-	-	-	-	-
RATING			-	-	-	-	-
NOTES	IF LOCATED ON FIRST FLOOR, PROVIDE 4" OPENING REGULATOR AT CASEMENT SASHES	IF LOCATED ON FIRST FLOOR, PROVIDE 4" OPENING REGULATOR AT CASEMENT SASHES	-	-	-	-	-

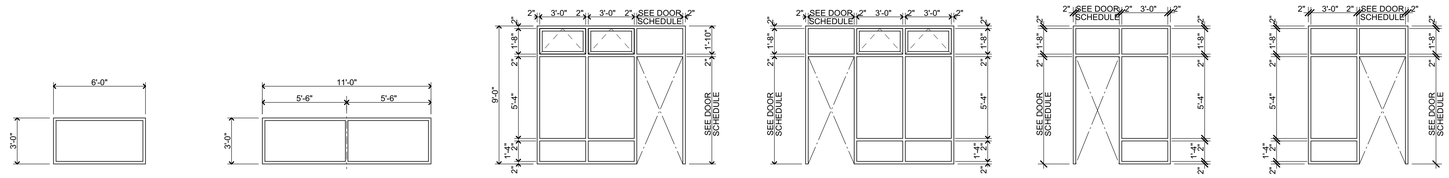

	SF08	SF09	SF10	SF11	SF13	SF14
TYPE	ALUMINUM STOREFRONT	ALUMINUM STOREFRONT	ALUMINUM STOREFRONT	ALUMINUM STOREFRONT	ALUMINUM STOREFRONT	ALUMINUM STOREFRONT
GLAZING	DUAL GLAZED	DUAL GLAZED	DUAL GLAZED	DUAL GLAZED	DUAL GLAZED	DUAL GLAZED
OPERATION	-	-	(2) AWNING TRANSOM SASHES	(2) AWNING TRANSOM SASHES	-	-
RATING	-	-	-	-	-	-
NOTES	-	-	NO OPERABLE SASHES AT DOORS: A106B, A110A,	NO OPERABLE SASHES AT DOORS: A110B	-	-

CURTAINWALL TYPES

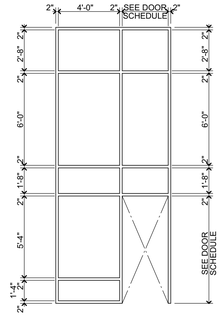

	CW01
TYPE	ALUMINUM CURTAINWALL
GLAZING	DUAL GLAZED
OPERATION	-
RATING	-
NOTES	-

BIMcloud: archiserver - BIMcloud Basic for ARCHICAD 22/1925.00 Liberty HS Classroom, BLDG A, AC22.7/27/2022,5:32 PM

IDENTIFICATION STAMP
DIV. OF THE STATE ARCHITECT
APP: 01-119994 INC:
REVIEWED FOR
SS ☑ FLS ☑ ACS ☑
DATE: 08/16/2022

QUATTROCCHI KWOK ARCHITECTS
Main:
636 Fifth Street, Santa Rosa, CA 95404
East Bay:
55 Harrison Street, Suite 525,
Oakland, CA 94607
(707) 576-0829

LICENSED ARCHITECT
JIM THEISS
LICENSE # C22643
EXP JUNE 30, 2023
STATE OF CALIFORNIA

SIGNED: JUNE 24, 2022

LIBERTY HIGH SCHOOL

NEW CLASSROOM BUILDINGS

850 2ND STREET
BRENTWOOD, CA
94513

LIBERTY UNION HIGH SCHOOL DISTRICT

DSA APP NO. 01-119994

ARCH PROJECT NO:	1925.00
DRAWN BY:	JDS
DRAWING SCALE:	NTS
PTN: 61721-83	FILE NO: 7-H4

CONSTRUCTION DOCUMENTS

JUNE 24, 2022

SHEET TITLE

WINDOW SCHEDULE

SHEET NUMBER

A-8.2

Liberty High School/LUHSD

Liberty High School New Classrooms
Finish & Material Schedule-INTERIOR

SPEC SECTION	FINISH CODE	MATERIAL	MANUFACTURER	PRODUCT	COLOR	FINISH	SIZE	COMMENTS	INSTALLATION
BASE									
09 6500	B1	RESILIENT BASE	BURKE	4" TP STANDARD BASE	DEEP SPACE #198		4"H x 100' ROLLS		
09 6500	CB1	COVED BASE	FORBO	MARMOLEUM CONCRETE	3732 ASTEROID	PER SPECIFICATION	6" HIGH MIN	INTEGRAL TO MATCH ADJACENT FLOORING PRODUCT	
09 6700	EB1	EPOXY (FLUID-APPLIED) COVE BASE	TERA-LITE	TERA-GEM III, DQ TERA-BLEND	GRAY W/ 2 CLEAR COATS	#70 MESH		INTEGRAL TO MATCH ADJACENT FLOORING PRODUCT	
FLOOR									
03 3511	C1	SEALED CONCRETE	WR MEADOWS	LIQUI-HARD	NATURAL GRAY CONCRETE			SEE FINISH PLAN	
09 6500	LIN1	MARMOLEUM SOLID SHEET	FORBO	MARMOLEUM CONCRETE	3723 NEBULA	PER SPECIFICATION		FIELD COLOR, SEE FINISH PLAN	
09 6500	LIN2	MARMOLEUM SOLID SHEET	FORBO	MARMOLEUM FRESCO	3203 HENNA	PER SPECIFICATION		ACCENT COLOR, SEE FINISH PLAN	
09 6700	EP1	EPOXY FLUID APPLIED FLOORING	TERA LITE	TERA-GEM III, DQ TERA-BLEND	GREY W/ 2 CLEAR SEAL	#70 MESH			
09 6813	CPT1	CARPET TILE	TARKETT/TANDUS	COLOR MAP 11130	NOCTURNAL #42807	PER SPECIFICATION	24"X24"	SEE FINISH PLAN	VERTICAL ASHLAR
09 6813	CPT2	CARPET TILE	TARKETT	ROCK SOLID	DESERT ROSE	PER SPECIFICATION	24"X24"	ACCENT NEAR DOOR SEE FINISH PLAN	VERTICAL ASHLAR
09 6813	CPT3	CARPET TILE (WALKOFF)	TARKETT	ABRASIVE ACTION II 02578	CHARCOAL	PER SPECIFICATION	24"X24"	WALK-OFF, SEE FINISH PLAN	VERTICAL ASHLAR
09 6500	RB1	RUBBER TILE FLOOR	MANNINGTON	RESET RUBBER	BEIGE TONES 824	PER SPECIFICATION	24"X24" OR 4'X50' ROLLS	SPECIAL DAY SENSORY ROOMS	GLUED WITH MANNINGTON ADHESIVE
PAINT									
09 9123	P1	GENERAL PAINT	SHERWIN WILLIAMS	PER SPECIFICATION	SW7003 TOQUE WHITE	PER SPECIFICATION			
09 9123	P2	GENERAL PAINT	SHERWIN WILLIAMS	PER SPECIFICATION	SW7019 GAUNTLET GRAY	PER SPECIFICATION		STRUCTURAL BEAMS, MECHANICAL ABOVE CLOUD CEILING, SEE RCP	
09 9123	ES1	EXPOSED STRUCTURE METAL COLUMN			PAINT TO MATCH P2	PAINT			
WALL									
06 8316	WP1	WALL PROTECTION / FRP	FRP	MARLITE	WHITE 100	P100	PEBBLED SURFACE	4'x8' PANELS	OFF-WHITE
06 8316	WP2	WALL PROTECTION	ACROVYN	WALL PROTECTION	265 FOG			PREP ROOM BUILDING B,	
06 8316	WP3	WALL PROTECTION	GREAT MATS	FOAM WALL MATS	TBD	TBD	2'X6'X2"	SENSORY ROOM 2" FOAM LAMINATED TO 1/2" PLY	PRE CUT AND WRAP FOR ALL OUTLETS ETC. ATTACHED WITH SCREWS
09 3000	WT1	WALL TILE	DALTILE	COLOR WHEEL CLASSIC	ARCTIC WHITE 0190	SEMI-GLOSS	3"X6"	FIELD, SEE INT COLOR BOARD	GROUT- 1/4" 1/8" COLOR TBD, GC TO PROVIDE GROUT OPTIONS
09 3000	WT2	WALL TILE	DALTILE	COLOR WHEEL CLASSIC	MUSTARD 1012	SEMI-GLOSS	3"X6"	ACCENT, SEE INT COLOR BOARD	
09 7200	TAC1	TACKWALL	CARNEGIE	XOREL-METEOR	6427 2003 YELLOW			ACCENT TAC WALL SEE FINISH PLAN AND INTERIOR ELEVATION	
09 7200	TAC2	TACKWALL	CARNEGIE	XOREL-METEOR	6427 711 WHITE			FIELD TAC COLOR SEE FINISH PLAN	
CEILINGS									
05 3000	AD1	EXPOSED ACOUSTIC METAL DECK			PAINT TO MATCH P1				
09 2116	GYP1	GYP BOARD			PAINT TO MATCH P1				
09 5100	ACT1	ACOUSTICAL CEILING TILE	ARMSTRONG	CALLA	WHITE		2'x4'	SEE RCP	
		CEILING GRID SYSTEM	ARMSTRONG	SUPRAFINE XL	WHITE		9/16" EXPOSED TEE	SEE RCP	
09 9123	ES1	EXPOSED STRUCTURE GLULAM			STAINED TO MATCH PL1				
WINDOW COVERING									
12 2400	WS1	WINDOW SHADE	MECHOSHADE 5X	ECOVEIL MECH/5 ROUND 4" SNAPLOC FASCIA	CLOTH: EGGSHELL 1566 FASCIA COLOR: XP5 GREY	1550 SERIES (3% OPEN)		MANUAL IN BUILDING A AND MOTORIZED IN BUILDING B	
		FASCIA COLOR	MECHOSHADE 5X	FASCIA	ALABASTER	GLOSS			
CASEWORK									
09 7200	WC1	WALLCOVERING	DRY ERASE						
06 4100	PL1	PLASTIC LAMINATE	WILSONART	HPL	WASHI CRYSTAL 5017	FINE VELVET FINISH		FOR TYP. COUNTERTOPS	
06 4100	PL2	PLASTIC LAMINATE	WILSONART	HPL	LIMBER MAPLE 10734-60	MATTE		FOR TYP. CABINETS , U.O.N	INSTALL GRAIN PATTERN VERTICALLY
12 3553	EC1	EPOXY RESIN (LAB COUNTERTOP)	TRESPA	TRESPA TOPLAB BASE	BLACK	CRYSTAL MATTE		LAB CLASSROOMS COUNTER TOP	

ACCESSORIES									
10 2113	TP1	TOILET PARTITIONS	SCRANTON	HINY HIDERS	CHARCOAL GREY	GRIP EX			
DOORS AND FRAMES									
08 1113	-	HOLLOW METAL DOORS	CECO DOOR (ASSA ABLOY GROUP)		MATCH XP2	SEMI-GLOSS		SEE EXT FINISH SCHEDULE FOR COLOR INFORMATION	

Liberty High School New Classrooms
Material Legend-EXTERIOR

SPEC SECTION	FINISH CODE	MATERIAL	MANUFACTURER	PRODUCT	COLOR	FINISH	SIZE	COMMENTS	INSTALLATION
EXTERIOR PAINTING									
09 9113	XP1	EXTERIOR PAINT- CEMENT PLASTER	SHERWIN WILLIAMS	SW6119 ANTIQUE WHITE	OFF WHITE	FLAT / MATTE			
09 9113	XP2	EXTERIOR PAINT- CEMENT PLASTER	SHERWIN WILLIAMS	SW7019 GAUNLET GRAY	DARK GRAY ACCENT	FLAT / MATTE			
09 9113	XP3	EXTERIOR PAINT- CEMENT PLASTER	SHERWIN WILLIAMS -> KELLY MOORE	KM 160 BRAVADO RED	DARK RED ACCENT	FLAT / MATTE			
WALL CLADDING									
09 2513	CP1	CEMENT PLASTER	BMI PRODUCTS	BMI 690 PLASTER	INTEGRAL TO MATCH XP1	ACRYLIC		OFF WHITE - FIELD	
09 2513	CP2	CEMENT PLASTER	BMI PRODUCTS	BMI 690 PLASTER	INTEGRAL TO MATCH XP2	ACRYLIC		DARK GRAY ACCENT	
09 2513	CP3	CEMENT PLASTER	BMI PRODUCTS	BMI 690 PLASTER	INTEGRAL TO MATCH XP3	ACRYLIC		DARK RED ACCENT	
EXTERIOR METAL									
05 7000	DM1	PERFORATED METAL PANELS	BOK MODERN		ANODIZED ALUMINIUM			AT ENTRANCE, SIGNAGE: "LIBERTY HIGH SCHOOL"	
05 7000	DM2	PERFORATED METAL PANELS			BRAVADO RED				
ROOFING									
07 4113	MRP1	METAL ROOF PANELS	GARLAND	STANDING SEAM	RIVER ROCK				
STAIRS									
05 5100	XTR1	PRECAST CONCRETE TREADS AND RISERS	CENTURY GROUP	EXTERIOR STAIRS	N/A	SEE SPEC			
05 5100	XRL1	GUARDRAILS / HANDRAILS				GALVANIZED STEEL		SEE EXTERIOR ELEVATION	
EXTERIOR MISC.									
07 1800	TC1	TRAFFIC COATING							
07 6200	SM1	SHEET METAL FLASHING AND TRIM							
DOORS AND FRAMES									
08 1113	-	HOLLOW METAL DOORS			PAINT TO MATCH P3	SEMI-GLOSS		SEE DOOR SCHEDULE AND/OR GENERAL NOTES	
08 1113		HOLLOW METAL FRAMES			PAINT TO MATCH P3	SEMI-GLOSS		SEE DOOR SCHEDULE AND/OR GENERAL NOTES	
ALUMINUM OPENINGS									
08 4313	-	ALUMINUM ENTRANCES AND STOREFRONT	OLDCASTLE GLASS		740 EC DARK BRONZE - DK C-1	FACTORY FINISH			
08 4413	-	ALUMINUM CURTAIN WALL	OLDCASTLE GLASS		740 EC DARK BRONZE - DK C-1	FACTORY FINISH			
08 5113	-	ALUMINUM WINDOWS	PER SPECIFICATION			FACTORY FINISH			

IDENTIFICATION STAMP
DIV. OF THE STATE ARCHITECT
APP: 01-119994 INC:
REVIEWED FOR
SS ☑ FLS ☑ ACS ☑
DATE: 08/16/2022

QUATTROCCHI KWOK ARCHITECTS
Main:
636 Fifth Street, Santa Rosa, CA 95404
East Bay:
55 Harrison Street, Suite 525, Oakland, CA 94607
(707) 576-0829

LICENSED ARCHITECT
JIM THEISS
LICENSE # C22643
EXP JUNE 30, 2023
STATE OF CALIFORNIA

SIGNED: JUNE 24, 2022

LIBERTY HIGH SCHOOL

NEW CLASSROOM BUILDINGS

850 2ND STREET
BRENTWOOD, CA
94513

LIBERTY UNION HIGH SCHOOL DISTRICT

DSA APP NO. 01-119994
ARCH PROJECT NO: 1925.00
DRAWN BY: HD
DRAWING SCALE: NTS
PTN: 61721-83 FILE NO: 7-H4
CONSTRUCTION DOCUMENTS
JUNE 24, 2022
SHEET TITLE

FINISH SCHEDULE

SHEET NUMBER

A-8.3

BIMcloud: archiserver - BIMcloud Basic for ARCHICAD 22/1925.00 Liberty HS Classroom_BLDG A_AC22:7/27/2022,5:32 PM

NOTE 1: AT ALL 1-HR AND 2-HR WALLS, THE AGGREGATE AREA OF WALL PENETRATIONS FOR ELECTRICAL OUTLET BOXES SHALL NOT EXCEED 100 SQ IN IN ANY 100 SQ FT OF WALL AREA. OUTLET BOXES ON OPPOSITE SIDES OF 1-HR WALLS SHALL BE SEPARATED BY A HORIZONTAL DISTANCE OF AT LEAST 24".

FOR PENETRATION AT RATED WALLS, SEE 33/A-9.1

NOTE 2: FIRE WALLS, FIRE BARRIERS, FIRE PARTITIONS, SMOKE BARRIERS AND SMOKE PARTITIONS OR ANY OTHER WALL REQUIRED TO HAVE PROTECTED OPENINGS OR PENETRATIONS SHALL BE EFFECTIVELY AND PERMANENTLY IDENTIFIED WITH SIGNS OR STENCILING. SUCH IDENTIFICATION SHALL:

-BE LOCATED IN ACCESSIBLE CONCEALED FLOOR, FLOOR-CEILING OR ATTIC SPACES AND

-BE LOCATED WITHIN 15 FEET OF THE END OF EACH WALL AND AT INTERVALS NOT EXCEEDING 30 FEET MEASURED HORIZONTALLY ALONG THE WALL OR PARTITION AND

-INCLUDE LETTERING NOT LESS THAN 3 INCHES IN HEIGHT WITH A MINIMUM 3/8 INCH STROKE IN A CONTRASTING COLOR INCORPORATING THE SUGGESTED WORDING: **"FIRE AND SMOKE BARRIER - PROTECT ALL OPENINGS".**

(REFERENCE CBC 2019 703.7)

FIRE RATED WALLS TYP NOTES

1/4" = 1'-0" C101114 **31**

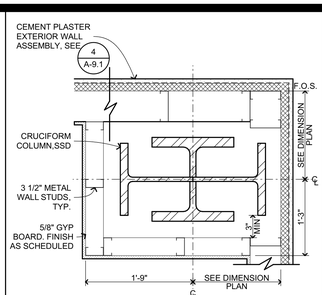

FURRED WALL AT CRUCIFORM COLUMN, TYP

1" = 1'-0" 1925.00 **26**

GYPSUM ASSOCIATION FIRE RESISTANCE DESIGN MANUAL, 21st EDITION
GA FILE NO. WP 1350 STC 35-39

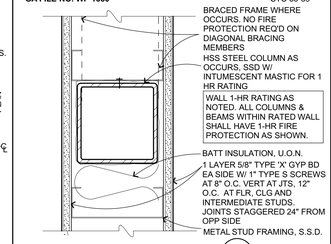

NOTE: FOR ADDITIONAL INFORMATION ALSO SEE 31/A-9.1

1-HR INT WALL METAL

3" = 1'-0" C101106 **21**

FLEX FLASHING INSTALLED BEFORE BUILDING PAPER, U.O.N.

DETAIL APPLIES TO ALL FRAMED WALL PENETRATIONS

FLEX FLASH MATERIAL SHALL BE SELF SEALING, FULLY ADHERED COMPOSITE FLEX FLASH, U.O.N.

12" WIDE FLEX SILL FLASH: x LENGTH REQ'D TO EXTEND 12" BEYOND OPNG AS SHOWN. ATTACH AT TOP ONLY (SEE BELOW)

BUILDING PAPER FLAP BENEATH - DO NOT ATTACH AT BOTTOM

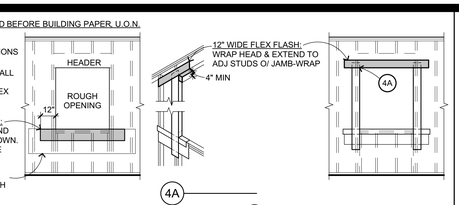

1 STEP 1 - SILL FLASHING

4 STEP 4 - WRAP AT HEAD

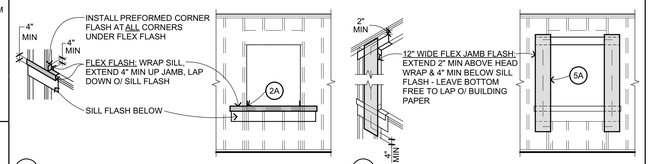

2 STEP 2 - WINDOW WRAP AT SILL

5 STEP 5 - JAMB FLASHING

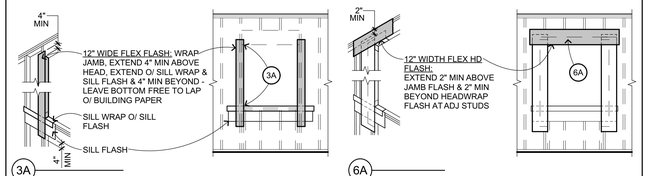

3 STEP 3 - WRAP AT JAMB

6 STEP 6 - HEAD FLASHING

TYP FLASHING/PAPERING

1/4" = 1'-0" B201103 **12**

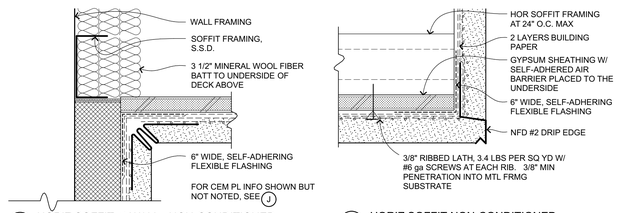

A HORIZ SOFFIT at WALL - NON-CONDITIONED
VERTICAL SECTION

G HORIZ SOFFIT NON-CONDITIONED
VERTICAL SECTION

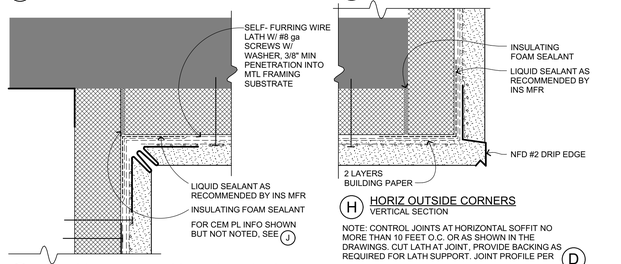

B HORIZ SOFFIT at WALL - CONDITIONED SPACE
VERTICAL SECTION

H HORIZ OUTSIDE CORNERS
VERTICAL SECTION

NOTE: CONTROL JOINTS AT HORIZONTAL SOFFIT NO MORE THAN 10 FEET O.C. OR AS SHOWN IN THE DRAWINGS. CUT LATH AT JOINT. PROVIDE BACKING AS REQUIRED FOR LATH SUPPORT. JOINT PROFILE PER D

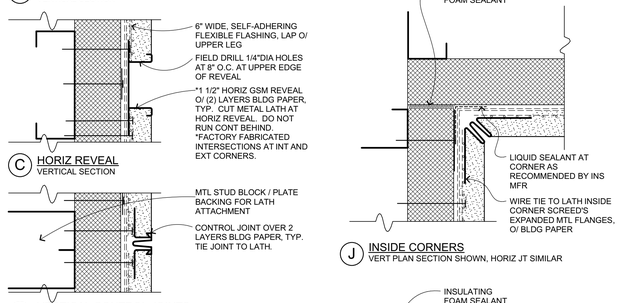

C HORIZ REVEAL
VERTICAL SECTION

J INSIDE CORNERS
VERT PLAN SECTION SHOWN, HORIZ JT SIMILAR

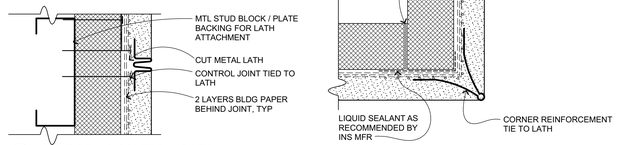

D VERTICAL CONTROL JOINTS
PLAN SECTION

E HORIZ & DIAG CONTROL JOINTS
VERTICAL SECTION

K VERT OUTSIDE CORNER
PLAN SECTION

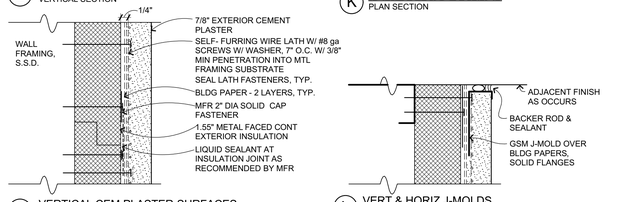

F VERTICAL CEM PLASTER SURFACES
VERTICAL SECTION

L VERT & HORIZ J-MOLDS
VERTICAL & PLAN SECTION

NOTES:

EXTERIOR WALL ASSEMBLY IS A PROPRIETARY SYSTEM, SEE PROJECT MANUAL

FOR FLASHING AT OPENINGS SEE 12/A-9.1

FOR SLIP JOINT AT FLOOR FRAMING SEE 14/A-9.1

FOR BASE OF WALL SEE 15/A-9.1

TYP CEM PLAS AT MTL FRMG W/ EXT INSULATION

6" = 1'-0" B201410 **4**

UL SYSTEM W-L-7040
1 AND 2 HOUR RATED ASSMBLIES

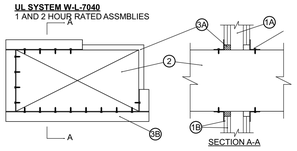

1. Wall Assembly: The fire-rated gypsum wallboard/stud wall assembly shall be constructed of the materials and in the manner specified in the individual U300 or U400 Series Wall and Partition Designs in the Fire Resistance directory or California Building Code.
A. Studs: As noted in rated assembly design. Additional framing members shall be used to completely frame around opening.
B. Wallboard, Gypsum*: Nom 5/8 inch thick , number of layers and sheet orientation shall be as specified in the individual Wall and Partition Design Number. Max area of opening is 1244 inch with the dimension of 49-1/4 inch The hourly F F rating of the firestop system is equal to the hourly fire rating of the wall assembly in which it is installed.
2. Steel Duct: Nom 24 inch by 48 inch (or smaller) No. 24 gauge (or heavier) galv steel duct to be installed within the firestop system. The annular pace shall be min 1/4 inch to a max 1 inch Duct to be rigidly supported on both sides of the wall assembly.
3. Firestop System: The firestop system shall consist of the following:
A. Fill, Void or Cavity Material*: Sealant: In 1-Hr assemblies, min 5/8 inch thickness of fill material applied within annulus flush with both surfaces of wall. In 2-Hr assemblies, min 1-1/4 inch thickness of sealant applied within annulus flush with both surfaces of wall.
HILTI CONSTRUCTION CHEMICALS, DIV OF HILTI, Inc. - FS-ONE Sealant or CP601S Elastomeric Firestop sealant or CP606 Flexible Sealant
B. Steel Retaining Angle: Min 1-1/2 inch by 1-1/2 inch No. 16 MSG (0.060 inch) galv steel angles cut to fit contour of duct with a 1-1/2 inch overlap on both surfaces of wall. Vertical leg of angle secured to duct with min No. 8 by 3/4 inch long sheet metal screws per side, spaced a max of 3 inch O.C.
*Bearing the UL Classification Marking

1-HR WALL PENETRATION

1" = 1'-0" C104201 **33**

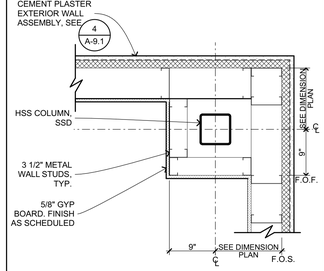

FURRED WALL AT HSS COLUMN, TYP

1" = 1'-0" 1925.00 **27**

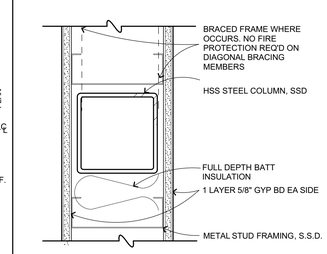

TYP INT NON RATED WALL MTL

3" = 1'-0" C101108 **22**

NOTE
CLEAN AND PREPARE ALL SURFACES BEFORE INSTALLATION

FOR CONDITIONS SHOWN BUT NOT NOTED, SEE 24/A-9.1

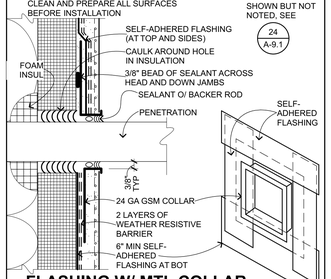

FLASHING W/ MTL COLLAR AT PENETRATION

6" = 1'-0" B201098 **28**

NOTE: BASIS OF DESIGN USG. UL **HW-S-0001.**
REFER TO MANUFACTURER'S PRODUCT INFORMATION FOR SPECIFIC UL ASSEMBLY, TERMINOLOGY OR DETAILS.

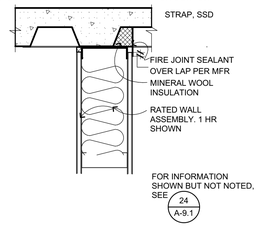

1 HR MTL WALL AT MTL DECK II

1 1/2"= 1'-0" C101112 **23**

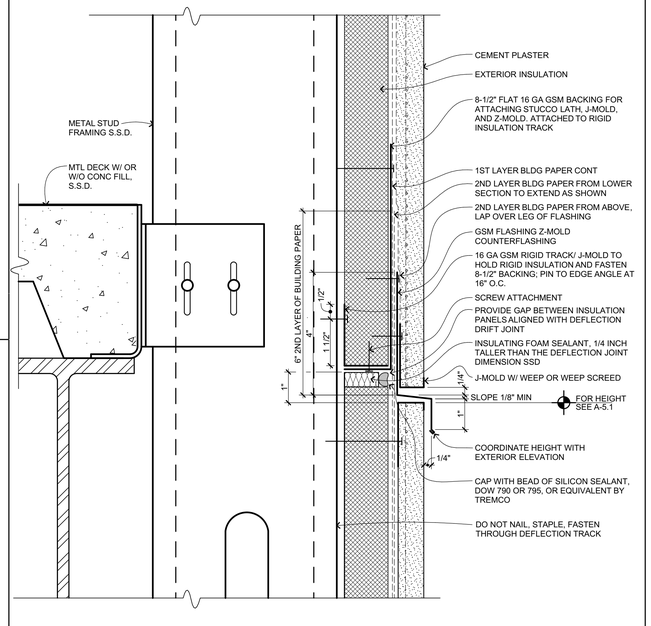

CEMENT PLASTER SLIP JT AT FLOOR / TALL WALL JOINT

6" = 1'-0" B201404_D **14**

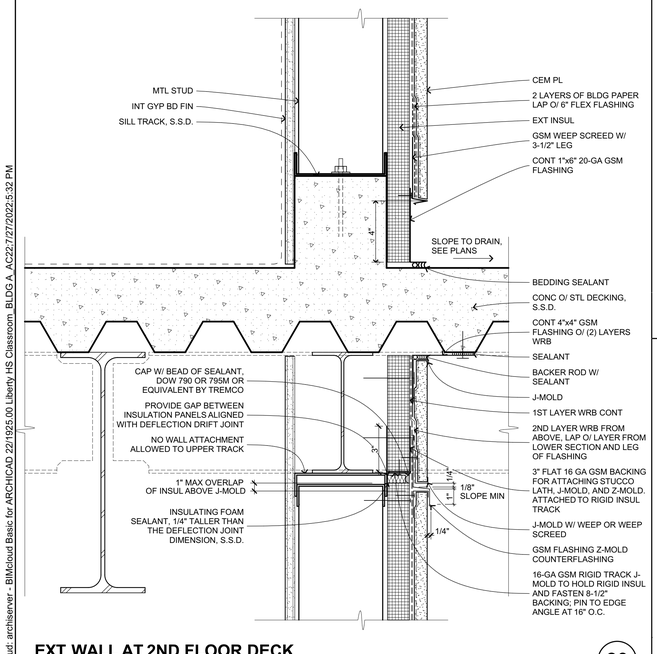

EXT WALL AT 2ND FLOOR DECK

3" = 1'-0" 1925.00 **30**

NOTE: BASIS OF DESIGN USG. UL **HW-S-0001.**
REFER TO MANUFACTURER'S PRODUCT INFORMATION FOR SPECIFIC UL ASSEMBLY, TERMINOLOGY OR DETAILS.

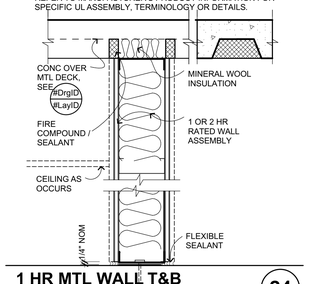

1 HR MTL WALL T&B

1 1/2"= 1'-0" C101111 **24**

EXPOSED STEEL WITHIN THE YELLOW STRIPE BOUNDARY IS STRUCTURAL AND PROTECTED. DO NOT DRILL, SCREW, PENETRATE OR DAMAGE THE SURFACE IN ANY WAY.
DO NOT REMOVE THIS TAG

ADHESIVE STICKER (NO SHOT PINS ALLOWED)

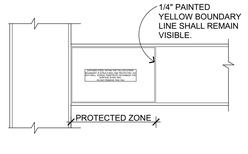

STRUCT STL TAG MOMENT FRAME

1/4" = 1'-0" C101121 **25**

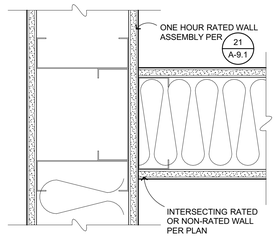

RATED WALL INTERSECTION

3" = 1'-0" C101115 **20**

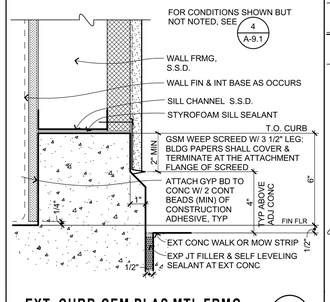

EXT. CURB-CEM PLAS MTL FRMG

3" = 1'-0" B201411 **15**

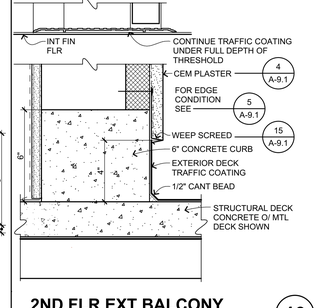

2ND FLR EXT BALCONY

3" = 1'-0" B201412 **10**

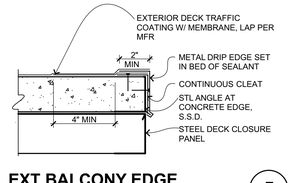

EXT BALCONY EDGE

3" = 1'-0" **5**

IDENTIFICATION STAMP
DIV. OF THE STATE ARCHITECT
APP: 01-119994 INC:
REVIEWED FOR
SS ☑ FLS ☑ ACS ☑
DATE: 08/16/2022

QUATTROCCHI KWOK ARCHITECTS
Main:
636 Fifth Street, Santa Rosa, CA 95404
East Bay:
55 Harrison Street, Suite 525, Oakland, CA 94607
(707) 576-0829

LICENSED ARCHITECT
JIM THEISS
LICENSE # C22643
EXP JUNE 30, 2023
STATE OF CALIFORNIA

SIGNED: JUNE 24, 2022

LIBERTY HIGH SCHOOL

NEW CLASSROOM BUILDINGS

850 2ND STREET
BRENTWOOD, CA
94513

LIBERTY UNION HIGH SCHOOL DISTRICT

DSA APP NO. 01-119994

ARCH PROJECT NO:	1925.00
DRAWN BY:	JDS
DRAWING SCALE:	AS NOTED
PTN: 61721-83	FILE NO: 7-H4

CONSTRUCTION DOCUMENTS

JUNE 24, 2022

SHEET TITLE

WALL DETAILS METAL FRAMED

SHEET NUMBER

A-9.1

BIMcloud: archiserver - BIMcloud Basic for ARCHICAD 22/1925.00 Liberty HS Classroom BLDG A, AC22/7/27/2022,5:32 PM

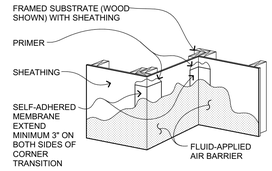

1 AIR BARRIER - INSIDE AND OUTSIDE CORNERS

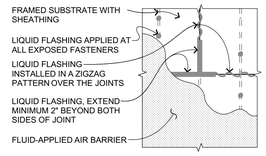

3 AIR BARRIER - SHEATHING JOINT TREATMENT

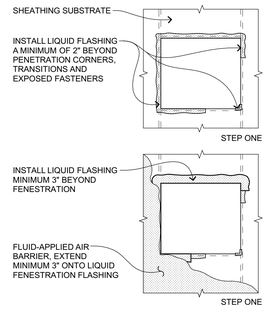

2 AIR BARRIER - FENESTRATION SHEATHING

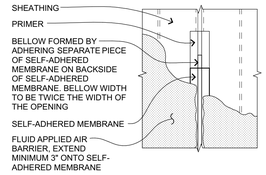

4 AIR BARRIER - EXPJOINT AT SHEATH'G SUBSTRATE

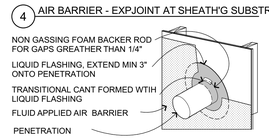

4 AIR BARRIER - PENETRATION

NOTE: PRIMER WHERE NOT SHOWN OR INDICATED ON DETAIL DRAWINS, REFER TO MATERIAL PRODUCT DATASHEETS FOR PRIMER APPLICATION REQUIREMENTS.

AIR BARRIER

1/4" = 1'-0" B201103.1 **17**

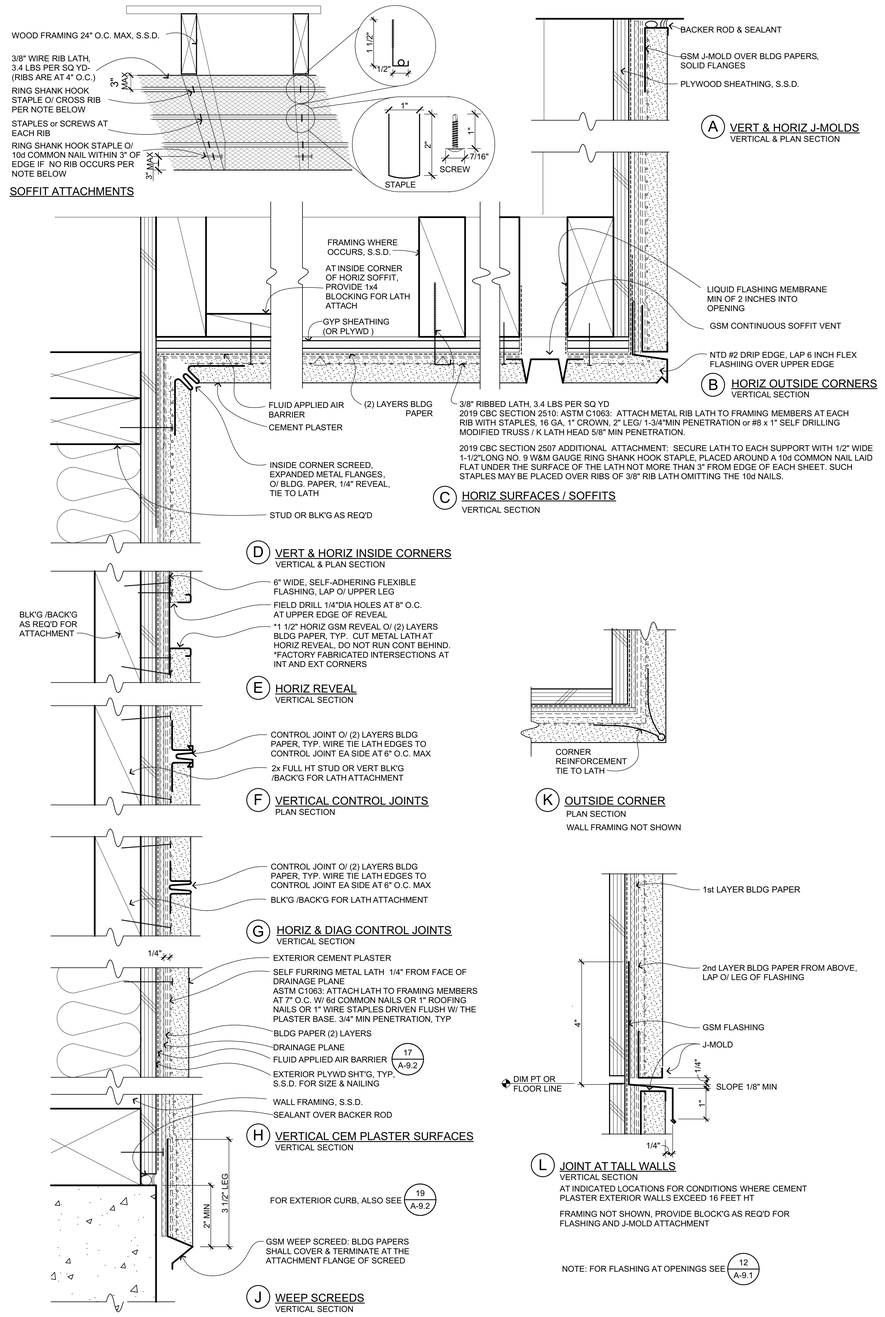

CEM PLASTER W/ DRAINAGE PLANE AND AIR BARRIER

6" = 1'-0" B201418 **4**

GYPSUM ASSOCIATION FIRE RESISTANCE DESIGN MANUAL, 21stEDITION
GA FILE NO. WP 3614 STC 40

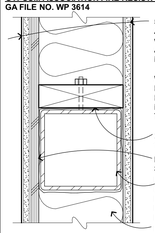

NOTE: FOR ADDITIONAL INFORMATION ALSO SEE 31 A-9.1

1-HR INTERIOR WALL

3" = 1'-0" C101101 **23**

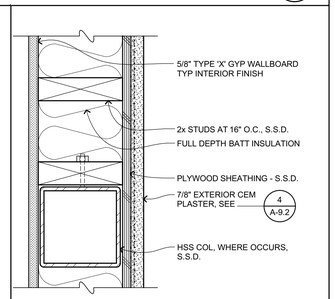

TYP EXT WALL

3" = 1'-0" B201100 **18**

STC 40

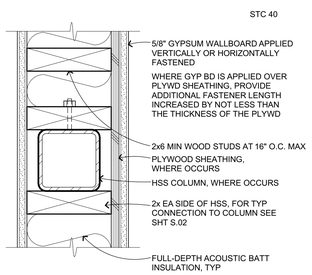

TYP INT WALL-NON RATED

3" = 1'-0" C101105 **24**

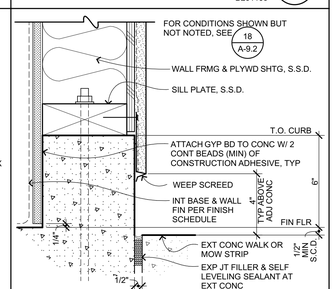

EXT CURB - CEM PLAS WD FRMG

3" = 1'-0" B201102 **19**

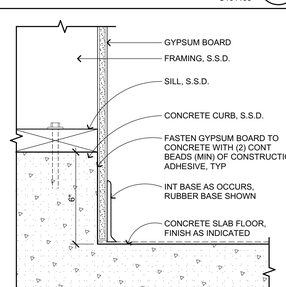

CONC CURB AT INT WALL-WD FRMG

3" = 1'-0" C301101 **25**

BIMcloud: archiserver - BIMcloud Basic for ARCHICAD 22/1925.00 Liberty HS Classroom, BLDG A, AC22:7/27/2022:5:32 PM

IDENTIFICATION STAMP
DIV. OF THE STATE ARCHITECT
APP: 01-119994 INC:
REVIEWED FOR
SS ☑ FLS ☑ ACS ☑
DATE: 08/16/2022

QUATTROCCHI KWOK ARCHITECTS
Main:
636 Fifth Street, Santa Rosa, CA 95404
East Bay:
55 Harrison Street, Suite 525, Oakland, CA 94607
(707) 576-0829

LICENSED ARCHITECT
JIM THEISS
LICENSE # C22643
EXP JUNE 30, 2023
STATE OF CALIFORNIA
SIGNED: JUNE 24, 2022

LIBERTY HIGH SCHOOL

NEW CLASSROOM BUILDINGS

850 2ND STREET
BRENTWOOD, CA
94513

LIBERTY UNION HIGH SCHOOL DISTRICT

DSA APP NO. 01-119994
ARCH PROJECT NO: 1925.00
DRAWN BY:
DRAWING SCALE: AS NOTED
PTN: 61721-83 FILE NO: 7-H4
CONSTRUCTION DOCUMENTS
JUNE 24, 2022
SHEET TITLE

WALL DETAILS WOOD FRAMED

SHEET NUMBER

A-9.2

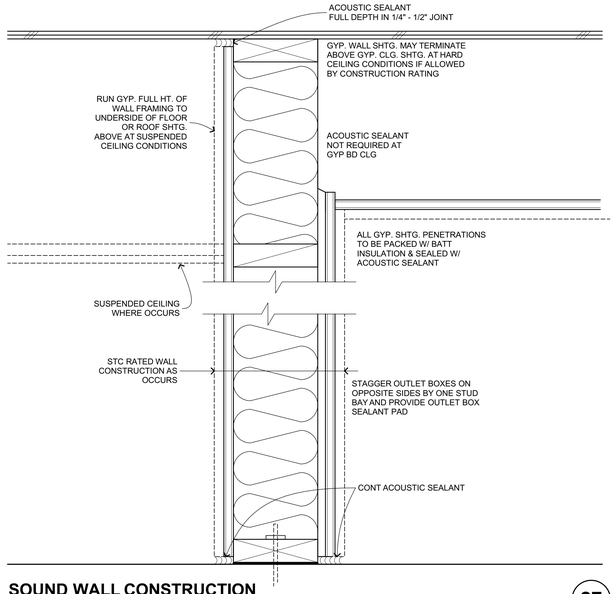

SOUND WALL CONSTRUCTION

3" = 1'-0" C101135 **27**

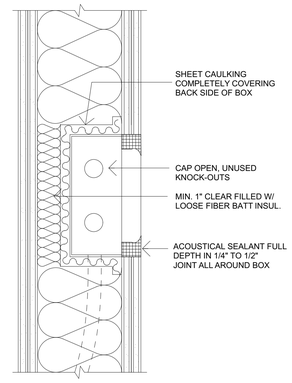

(A) BOX SIZE 4" X 8" AND UNDER

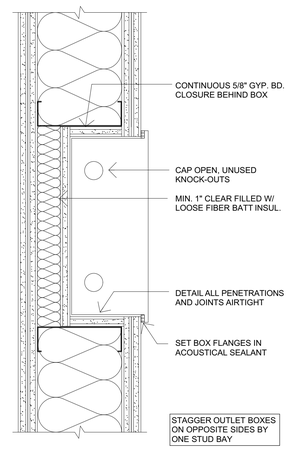

(B) BOX SIZE OVER 4" X 8"

AIRTIGHT RECESSES MTL

3" = 1'-0" C101137_B **23**

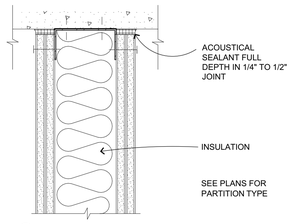

(A) AT FLAT SURFACE

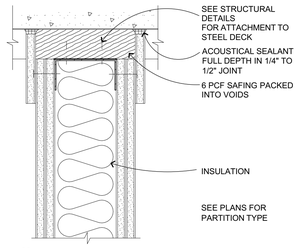

(B) AT STEEL DECK PERPENDICULAR TO FLUTES

AT ALL LOCATIONS, INCLUDING AIR PLENUMS, ALL OPEN STUD WALL CAVITIES AND OTHER OPENINGS TO BE SEALED TO PREVENT THE PASSAGE OF AIR AND SOUND

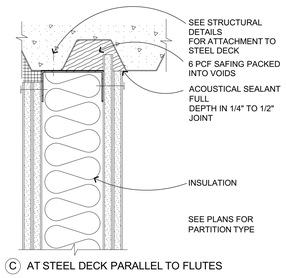

(C) AT STEEL DECK PARALLEL TO FLUTES

AIRTIGHT CONSTRUCTION

3" = 1'-0" C101136_B **19**

GYPSUM ASSOCIATION FIRE RESISTANCE DESIGN MANUAL, 21st EDITION
FLOOR-CEILING ASSEMBLY: GA FILE NO. FC 5529
ROOF-CEILING ASSEMBLY: GA FILE NO. RC 2601

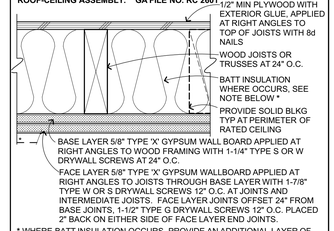

* WHERE BATT INSULATION OCCURS, PROVIDE AN ADDITIONAL LAYER OF 5/8" TYPE 'X' GYPSUM WALLBOARD, APPLIED PER THE FACE LAYER WITH AN ADDITIONAL FASTENER LENGTH INCREASED BY NOT LESS THAN THE THICKNESS OF THE ADDITIONAL LAYER OF GYP BD

1-HR CEILING CONSTRUCTION

3" = 1'-0" B1010.20 WD 1HR 001 **2**

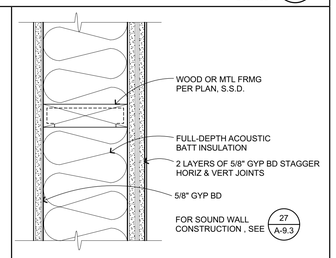

STC 45 SOUND WALL

3" = 1'-0" C101131 **28**

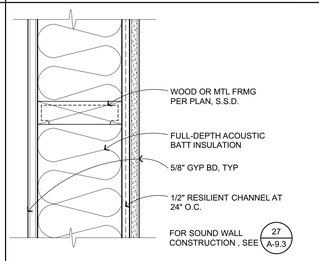

STC 50 SOUND WALL

3" = 1'-0" C101132 **29**

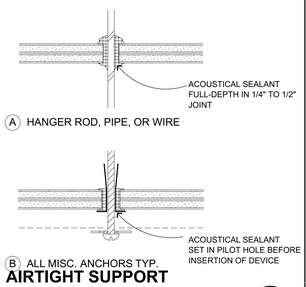

(A) HANGER ROD, PIPE, OR WIRE

(B) ALL MISC. ANCHORS TYP.

AIRTIGHT SUPPORT ELEMENTS

3" = 1'-0" C101138 **24**

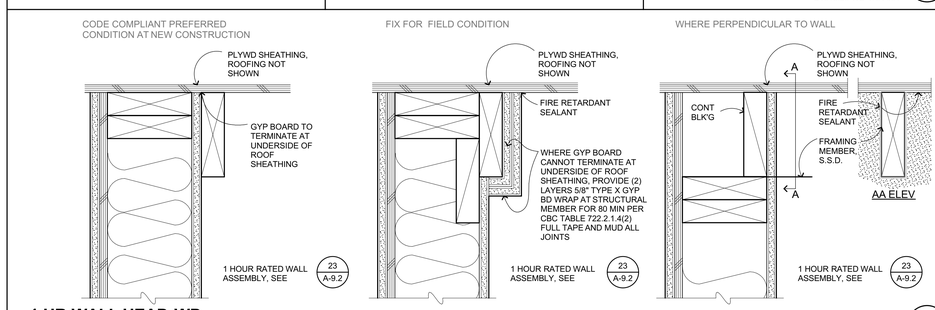

1 HR WALL HEAD-WD

3" = 1'-0" C101101.1 **3**

NOTE
CLEAN AND PREPARE ALL SURFACES BEFORE INSTALLATION

FOR CONDITIONS SHOWN BUT NOT NOTED, SEE 24 A-9.1

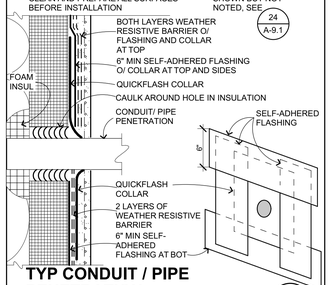

TYP CONDUIT / PIPE PENETRATION

6" = 1'-0" B201098 **30**

BIMcloud: archiserver - BIMcloud Basic for ARCHICAD 22/1925.00 Liberty HS Classroom, BLDG A, AC22/7/27/2022-5:32 PM

IDENTIFICATION STAMP
DIV. OF THE STATE ARCHITECT
APP: 01-119994 INC:
REVIEWED FOR
SS ☑ FLS ☑ ACS ☑
DATE: 08/16/2022

QUATTROCCHI KWOK ARCHITECTS
Main:
636 Fifth Street, Santa Rosa, CA 95404
East Bay:
55 Harrison Street, Suite 525,
Oakland, CA 94607
(707) 576-0829

LICENSED ARCHITECT
JIM THEISS
LICENSE # C22643
EXP JUNE 30, 2023
STATE OF CALIFORNIA

SIGNED: JUNE 24, 2022

LIBERTY HIGH SCHOOL

NEW CLASSROOM BUILDINGS

850 2ND STREET
BRENTWOOD, CA
94513

LIBERTY UNION HIGH SCHOOL DISTRICT

DSA APP NO. 01-119994
ARCH PROJECT NO: 1925.00
DRAWN BY:
DRAWING SCALE:
PTN: 61721-83 FILE NO: 7-H4
CONSTRUCTION DOCUMENTS
JUNE 24, 2022
SHEET TITLE

FRAMING DETAILS

SHEET NUMBER

A-9.3

NOTE: ALUMNIUM STOREFRONT AND INTEGRATED SUNSHADE SYSTEM ARE FROM THE SAME MANUFACTURER AND TO BE A DEFERRED SUBMITTAL FOR APPROVAL.

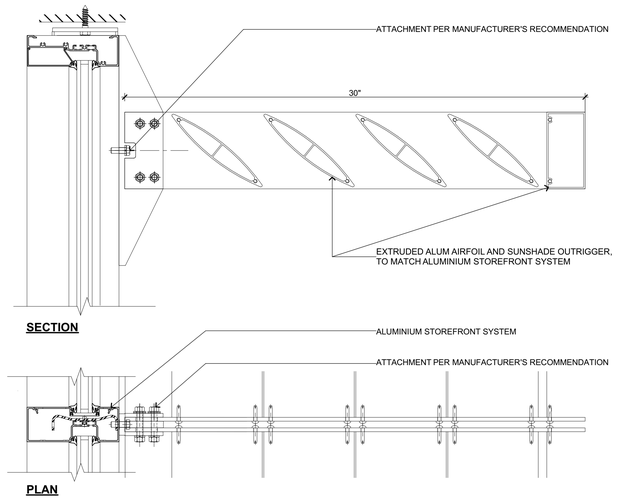

STOREFRONT SUNSHADE 22

3" = 1'-0" 1925.00

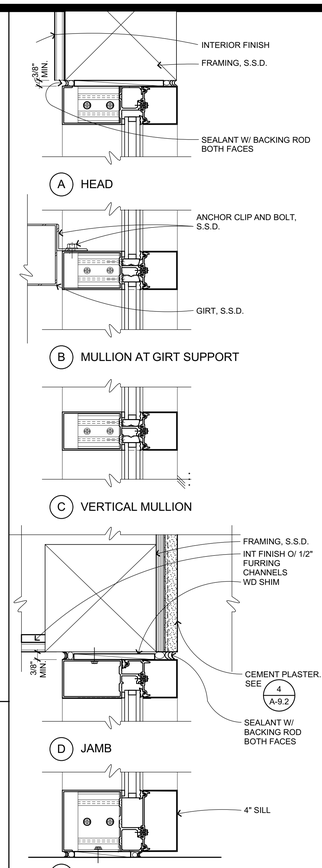

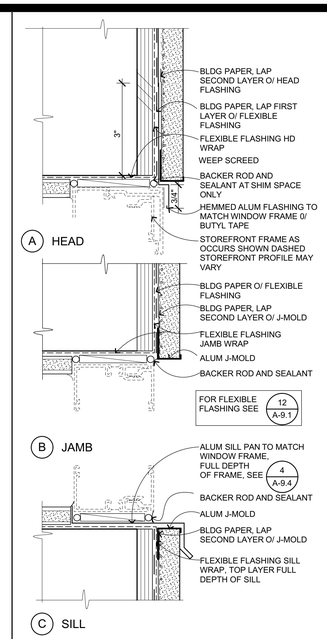

STOREFRONT FLASH'G-ENLARGED 12

6" = 1'-0" B202102_A

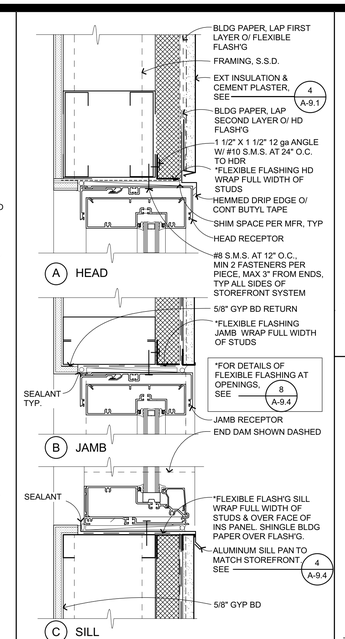

6" ALUM STOREFRONT EXT INS 7

3" = 1'-0" B202101.3_B

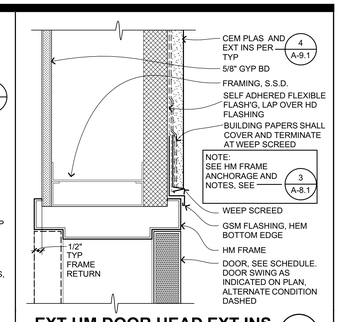

EXT HM DOOR HEAD EXT INS 1

3" = 1'-0" B203101_B

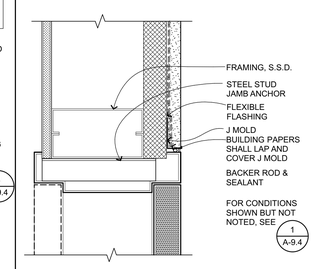

EXT HM DOOR JAMB EXT INS 2

3" = 1'-0" B203102_B

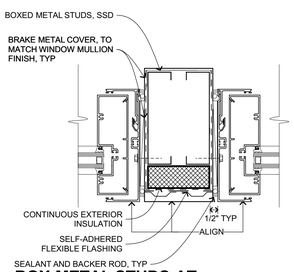

BOX METAL STUDS AT WINDOWS 28

3" = 1'-0" 1925.00

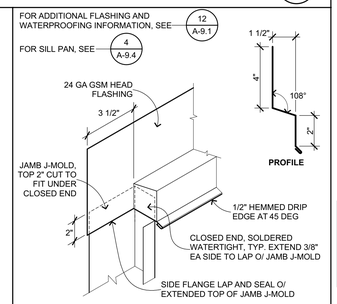

EXT DOOR FLASHING 23

3" = 1'-0" B201099

CURTAIN WALL IS DEFERRED APPROVAL ITEM. FASTENERS SUBJECT TO CHANGE BASED UPON ENGINEERED DESIGN FOR SPECIFIC INSTALLATION.
FASTEN CURTAIN WALL PERIMETER W/ FASTENERS AT 12" O.C. MIN. USING A MINIMUM OF 2 FASTENERS PER PIECE AT A MAXIMUM DISTANCE OF 3" FROM ENDS. AT STEEL FRAMING USE 1/4" S.S SELF-DRILLING, SELF-TAPPING SCREWS. AT CONCRETE USE 3/8" BOLTS W/ EXPANSION SHIELDS AND MINIMUM OF 3" PENETRATION.

CURTAIN WALL 18

3" = 1'-0" B202301

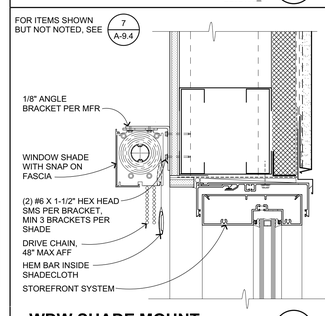

WDW SHADE MOUNT 13

3" = 1'-0" 1925.00

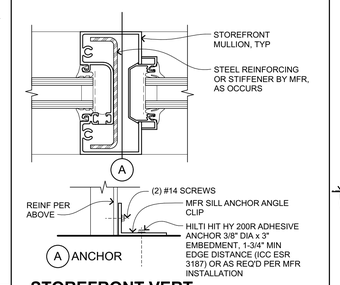

STOREFRONT VERT MULLION 8

6" = 1'-0" B202103

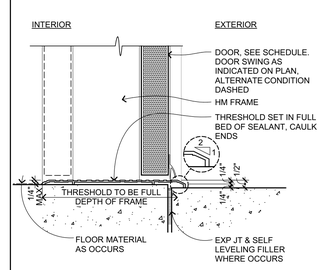

THRESHOLD 3

3" = 1'-0" B203103

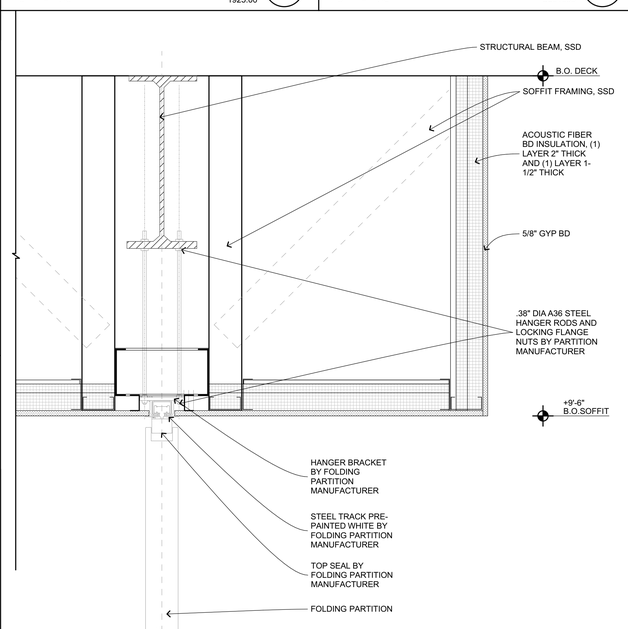

FOLDING PARTITION HEAD 25

1 1/2"= 1'-0"

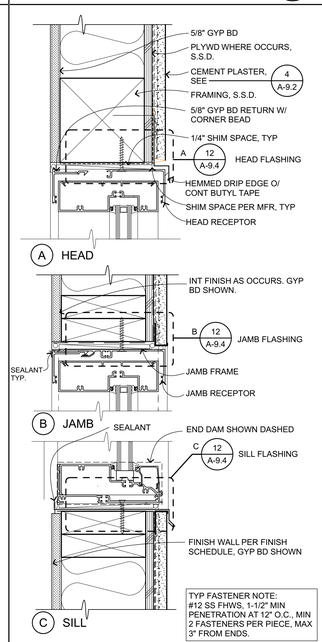

TYP FASTENER NOTE:
#12 SS FHWS, 1-1/2" MIN. PENETRATION AT 12" O.C., MIN 2 FASTENERS PER PIECE, MAX 3" FROM ENDS.

6" ALUM STOREFRONT 20

3" = 1'-0" B202101.2_A

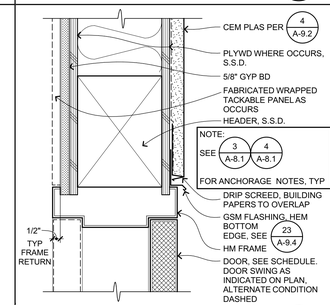

EXT HM DR HEAD 14

3" = 1'-0" B203101_A

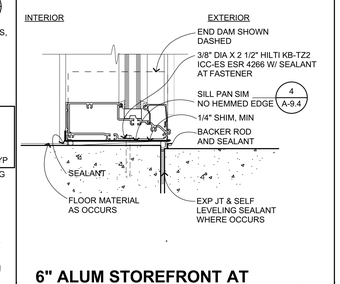

6" ALUM STOREFRONT AT GRADE 9

3" = 1'-0" B202104

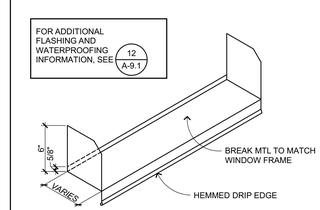

SILL PAN 4

1 1/2"= 1'-0" B201105

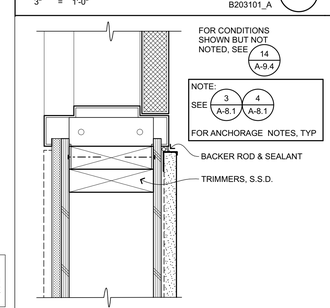

EXT HM JAMB 15

3" = 1'-0" B203102_A

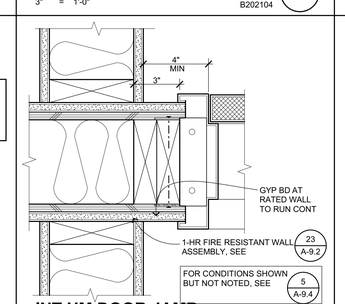

INT HM DOOR JAMB ADJACENT 10

3" = 1'-0" C102502A

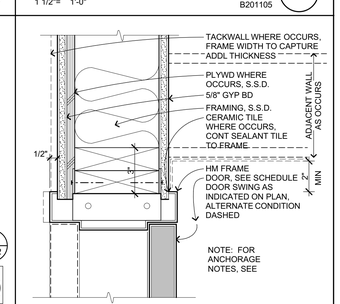

INT HM HEAD/JAMB 5

3" = 1'-0" C102501

IDENTIFICATION STAMP
DIV. OF THE STATE ARCHITECT
APP: 01-119994 INC:
REVIEWED FOR
SS ☑ FLS ☑ ACS ☑
DATE: 08/16/2022

QUATTROCCHI KWOK ARCHITECTS
Main:
636 Fifth Street, Santa Rosa, CA 95404
East Bay:
55 Harrison Street, Suite 525, Oakland, CA 94607
(707) 576-0829

LICENSED ARCHITECT
JIM THEISS
LICENSE # C22643
EXP JUNE 30, 2023
STATE OF CALIFORNIA
SIGNED: JUNE 24, 2022

LIBERTY HIGH SCHOOL

NEW CLASSROOM BUILDINGS

850 2ND STREET
BRENTWOOD, CA
94513

LIBERTY UNION HIGH SCHOOL DISTRICT

DSA APP NO. 01-119994

ARCH PROJECT NO:	1925.00
DRAWN BY:	JDS
DRAWING SCALE:	AS NOTED
PTN: 61721-83	FILE NO: 7-H4

CONSTRUCTION DOCUMENTS
JUNE 24, 2022
SHEET TITLE

OPENING DETAILS

SHEET NUMBER
A-9.4

BIMcloud: archiserver - BIMcloud Basic for ARCHICAD 22/1925.00 Liberty HS Classroom_BLDG A_AC22-7/27/2022-5:32 PM

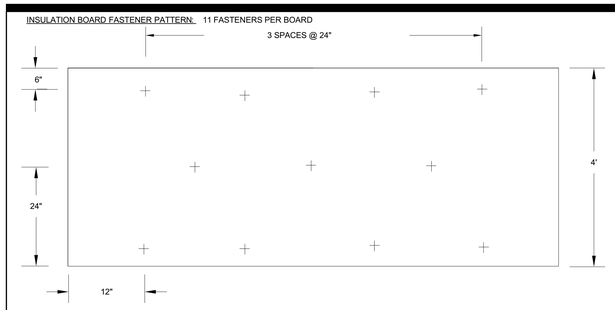

INSUL BOARD FASTENER PATTERN

1/4" = 1'-0" 1925.00 **26**

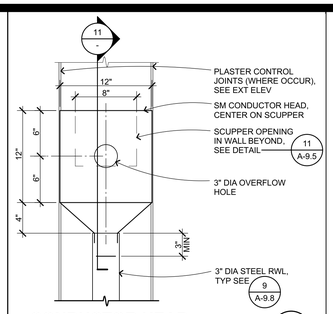

CONDUCTOR HEAD

1 1/2"= 1'-0" B301415 **21**

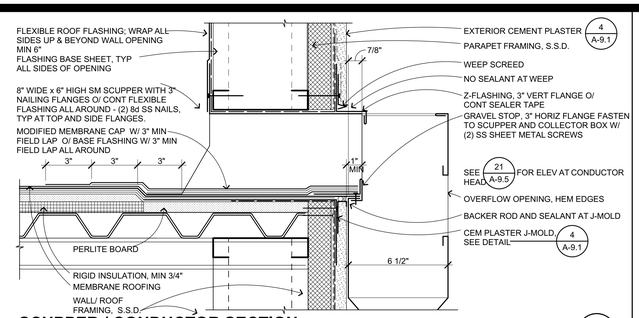

SCUPPER / CONDUCTOR SECTION

3" = 1'-0" B301414 **11**

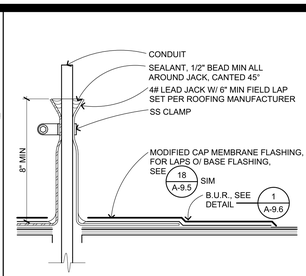

CONDUIT ROOF PENETRATION FLASH'G

3" = 1'-0" B301215 **6**

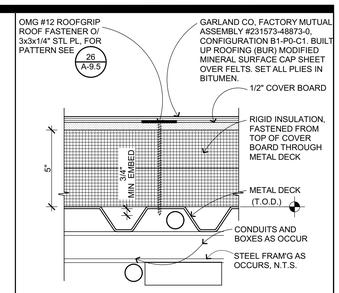

B.U.R. AT MTL DECK

3" = 1'-0" B301205.1 **1**

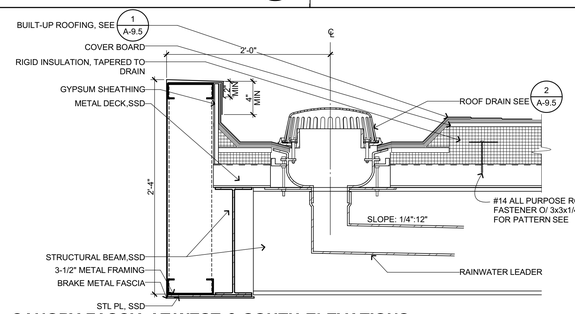

CANOPY FASCIA AT WEST & SOUTH ELEVATIONS

1 1/2"= 1'-0" 1925.00 **17**

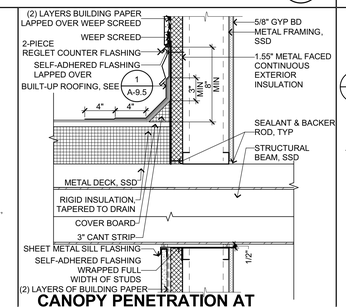

CANOPY PENETRATION AT WEST & SOUTH ELEVATIONS

1 1/2"= 1'-0" 1925.00 **12**

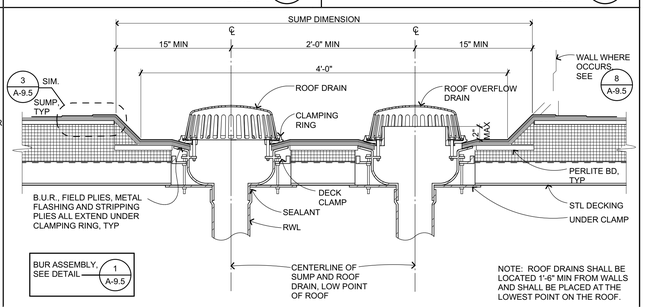

ROOF DRAIN- MTL FRMG

1 1/2"= 1'-0" B304302_B **2**

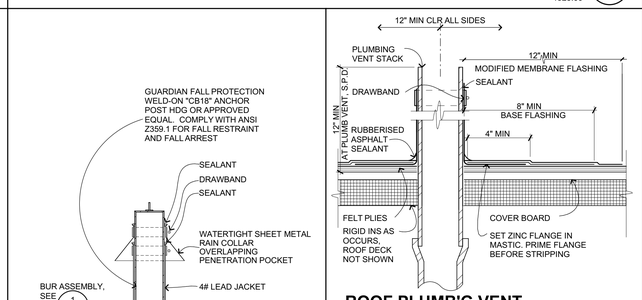

ROOF PLUMB'G VENT FLASH'G

3" = 1'-0" B301214 **18**

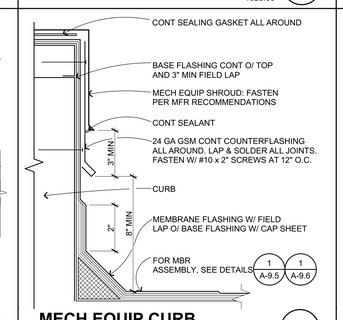

MECH EQUIP CURB

3" = 1'-0" B201398 **13**

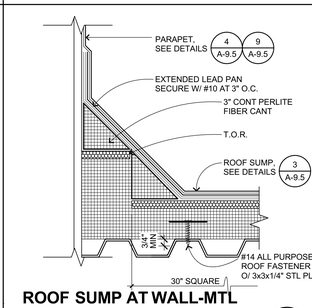

ROOF SUMP AT WALL-MTL DECK

3" = 1'-0" B301213 **8**

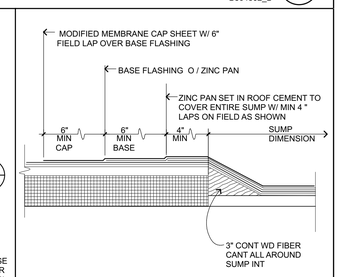

ROOF DRAIN EDGE

3" = 1'-0" B304303 **3**

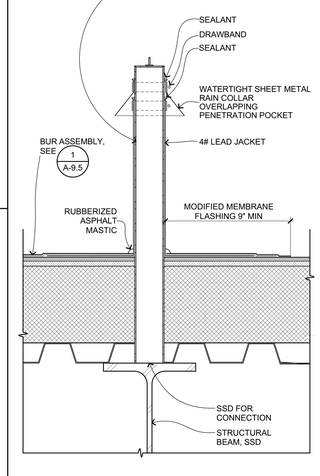

ROOF ANCHOR DETAIL

3" = 1'-0" B301214.1621.00 **24**

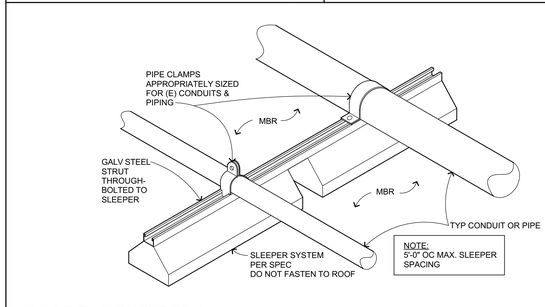

ROOF TOP SLEEPERS

1 1/2"= 1'-0" B201399 **14**

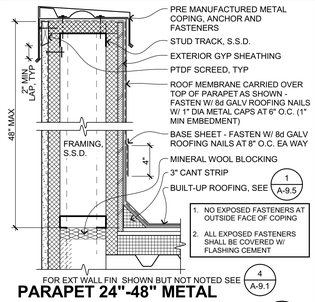

PARAPET 24"-48" METAL FRAMING

1 1/2"= 1'-0" B301204.2 **9**

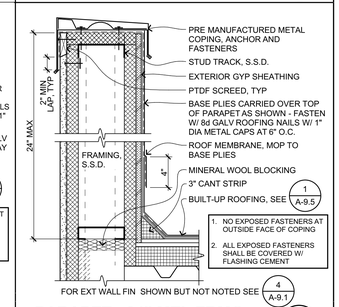

PARAPET <24" MTL FRMG

1 1/2"= 1'-0" B301204.1 **4**

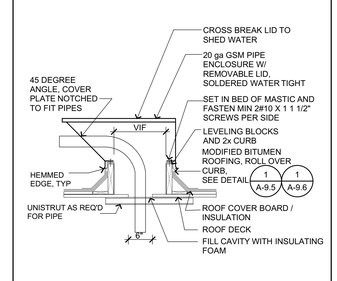

PIPE ENCLOSURE

3" = 1'-0" B201404 **15**

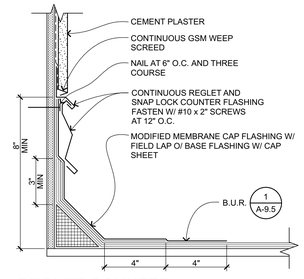

REGLET COUNTER FLASHING

3" = 1'-0" B301208 **10**

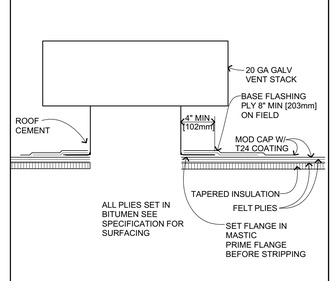

SM ROOF VENT

6" = 1'-0" B301216 **5**

IDENTIFICATION STAMP
DIV. OF THE STATE ARCHITECT
APP: 01-119994 INC:
REVIEWED FOR
SS ☑ FLS ☑ ACS ☑
DATE: 08/16/2022

QUATTROCCHI KWOK ARCHITECTS
Main:
636 Fifth Street, Santa Rosa, CA 95404
East Bay:
55 Harrison Street, Suite 525, Oakland, CA 94607
(707) 576-0829

LICENSED ARCHITECT
JIM THEISS
LICENSE # C22643
EXP JUNE 30, 2023
STATE OF CALIFORNIA

SIGNED: JUNE 24, 2022

LIBERTY HIGH SCHOOL

NEW CLASSROOM BUILDINGS

850 2ND STREET
BRENTWOOD, CA
94513

LIBERTY UNION HIGH SCHOOL DISTRICT

DSA APP NO. 01-119994

ARCH PROJECT NO:	1925.00
DRAWN BY:	JDS
DRAWING SCALE:	AS NOTED
PTN: 61721-83	FILE NO: 7-H4

CONSTRUCTION DOCUMENTS
JUNE 24, 2022

SHEET TITLE

ROOF DETAILS

SHEET NUMBER

A-9.5

BIMcloud: archiserver - BIMcloud Basic for ARCHICAD 22/1925.00 Liberty HS Classroom_BLDG A_AC22.7/27/2022,5:32 PM

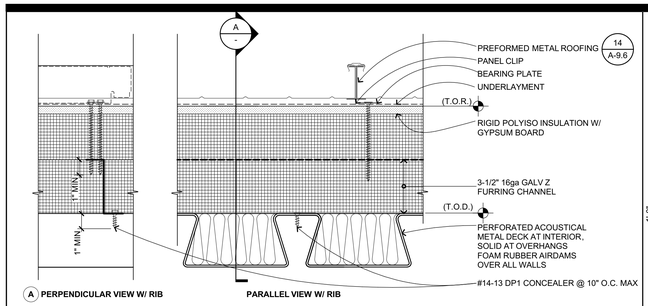

MTL ROOF'G AT MTL SOUND DECK

3" = 1'-0" B301119.2 **26**

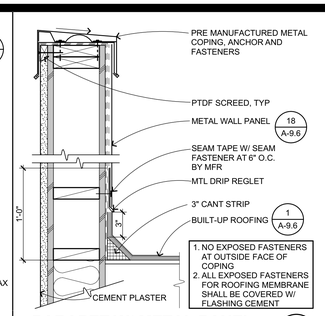

PARAPET W/ METAL PANEL

1 1/2"= 1'-0" B201204 **21**

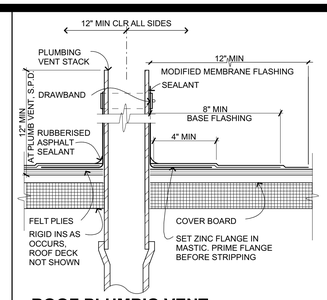

ROOF PLUMB'G VENT FLASH'G

3" = 1'-0" B301214 **11**

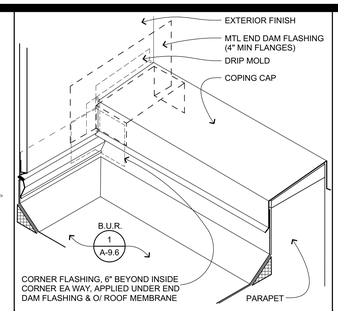

COPING FLASH-INTERSECTION

1 1/2"= 1'-0" B301207 **6**

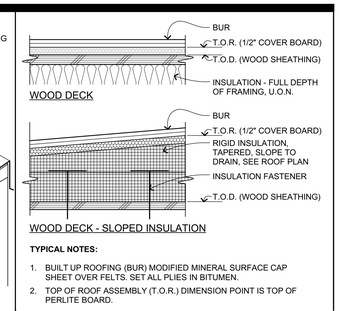

TYPICAL NOTES:

1. BUILT UP ROOFING (BUR) MODIFIED MINERAL SURFACE CAP SHEET OVER FELTS. SET ALL PLIES IN BITUMEN.
2. TOP OF ROOF ASSEMBLY (T.O.R.) DIMENSION POINT IS TOP OF PERLITE BOARD.

TYP B.U.R. ASSEMBLIES

3" = 1'-0" B301201 **1**

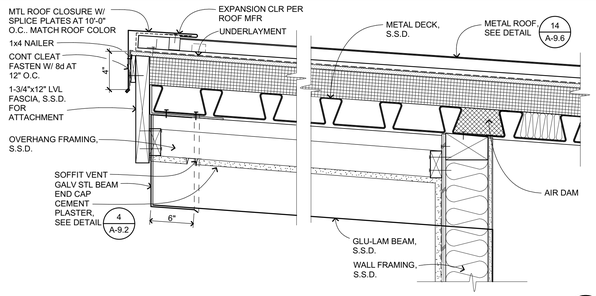

HIGH ROOF OVERHANG - BUILDING B

1 1/2"= 1'-0" B201603 **27**

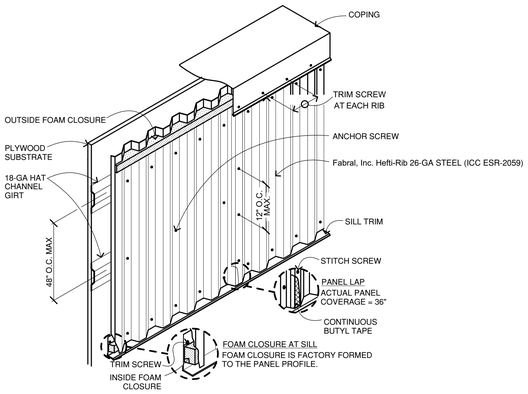

FASTENER AND ACCESSORY NOTES -- ICC ESR 1976

ANCHOR SCREW
- #12-14 X 1 1/4" TEKS2 by ITW Buildex HWH, 2-PT, SELF-DRILLING SCREW W/ NEOPRENE BONDED WASHER.
- AT EACH GIRT, INSTALL @7.2" O.C. MAX

STITCH SCREW
- #10-16 x 1" TEKS 2 by ITW Buldex HWH, 1-PT, SELF-DRILLING SCREW W/ NEOPRENE BONDED WASHER
- VERT SPACING 12" O.C. MAX

TRIM SCREW
- #8x1/2" PAN HEAD, PT.1, SELF-DRILLING SCREW
- HORIZONTAL SPACING = ONE PER EACH PANEL RIB

FOAM CLOSURE
- INSIDE AND OUTSIDE CLOSURES. (1) ONE EACH PER 36" PANEL
- WHEN INSTALLED PROPERLY, FOAM CLOSURE IS COMPRESSED 20%

BUTYL SEALANT TAPE
- BUTYL TAPE IS 1/8" THICK X 1/2" WIDE AND SUPPLIED IN ROLLS OF 30'-0".
- APPLIED TO NON-EXPOSED LAP CONDITION, THEN FASTEN LAP SCREWS @ 12" O.C. MAX. VERTICALLY.

METAL WALL PANEL

6" = 1'-0" B201202 **18**

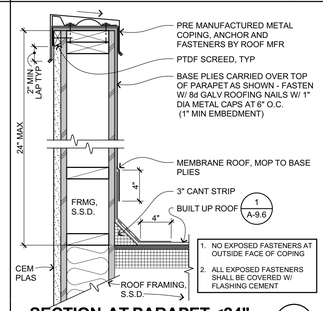

SECTION AT PARAPET <24"

1 1/2"= 1'-0" B301202.1 **2**

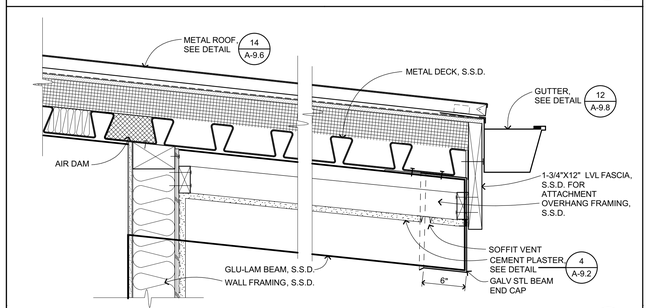

VENTED EAVE - BUILDING B

1 1/2"= 1'-0" B201602 **28**

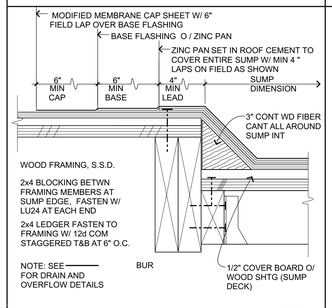

ROOF DRAIN SUMP WD ALT

3" = 1'-0" B304304 **13**

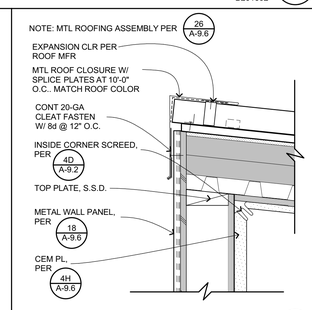

RIDGE AT MECH WELL

1 1/2"= 1'-0" 1925.00 **29**

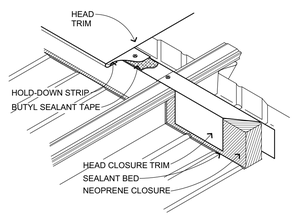

MTL ROOF HD ASSEMBLY RMER SPAN

3" = 1'-0" B301113 **24**

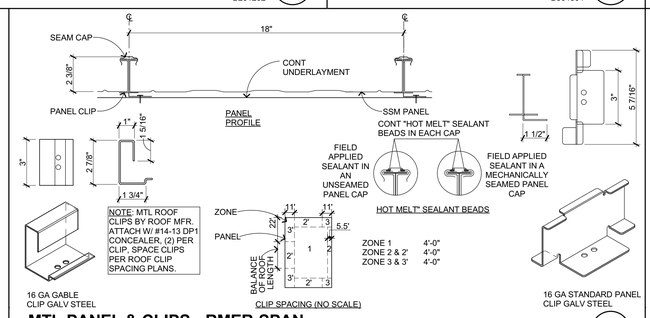

MTL PANEL & CLIPS - RMER SPAN

3" = 1'-0" B301116 **14**

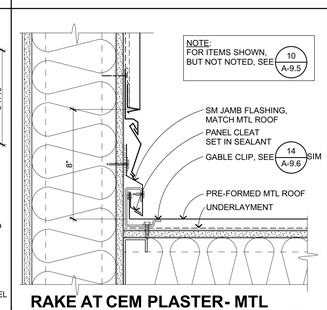

RAKE AT CEM PLASTER- MTL FRMG

3" = 1'-0" B301109 **9**

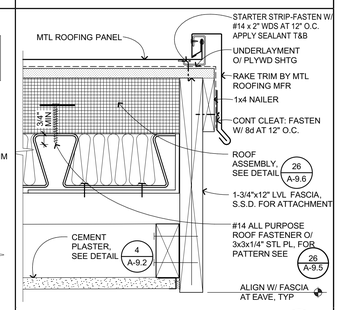

ROOF RAKE

3" = 1'-0" B301103_A **4**

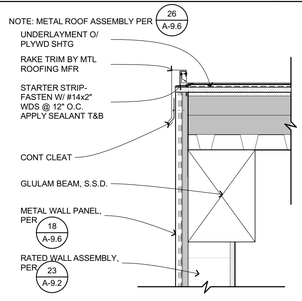

RAKE AT MECH WELL

1 1/2"= 1'-0" 1925.00 **30**

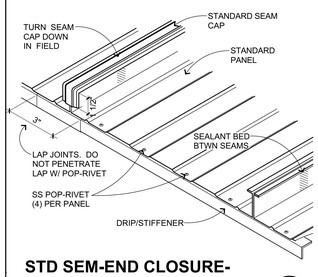

STD SEM-END CLOSURE- RMER SPAN

3" = 1'-0" B301114 **25**

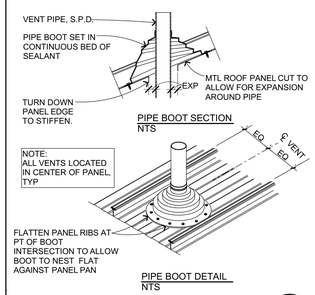

VENT BOOT AT MTL ROOF

6" = 1'-0" B301115 **20**

1. STANDING SEAM METAL ROOFING CLIPS TO BE SECURED PER 14 A-9.6 OR 24 A-9.6
2. ALL OTHER FASTENERS FOR FLASHING AND APPURTENANCES SHALL EXTEND 1/2" MINIMUM BEYOND WALL OF METAL FRAMING OR SOLID BACKING AND SHALL PENETRATE 1 1/2" MINIMUM INTO WOOD FRAMING OR SOLID BLOCKING. FASTENERS SHALL BE #10 MINIMUM SCREWS OF APPROVED TYPE (STAINLESS STEEL WITH NEOPRENE WASHERS WHERE EXPOSED).
3. ISOLATE ALL GSM AND OTHER FERROUS FLASHINGS AND FASTENERS FROM NON-FERROUS MATERIALS WITH SELF - ADHERED FLEXIBLE MEMBRANE.

TYP MTL ROOF NOTES

3" = 1'-0" B301118 **15**

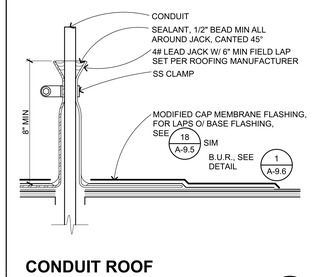

CONDUIT ROOF PENETRATION FLASH'G

3" = 1'-0" B301215 **10**

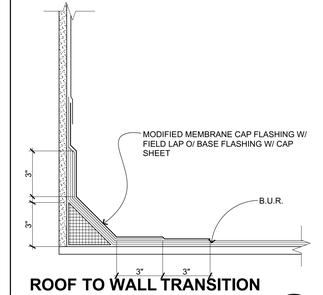

ROOF TO WALL TRANSITION (CANT STRIP)

3" = 1'-0" B301218 **5**

BIMcloud: archiserver - BIMcloud Basic for ARCHICAD 22/1925.00 Liberty HS Classroom, BLDG A, AC22-7/27/2022-5:32 PM

IDENTIFICATION STAMP
DIV. OF THE STATE ARCHITECT
APP: 01-119994 INC:
REVIEWED FOR
SS ☑ FLS ☑ ACS ☑
DATE: 08/16/2022

QUATTROCCHI KWOK ARCHITECTS
Main:
636 Fifth Street, Santa Rosa, CA 95404
East Bay:
55 Harrison Street, Suite 525, Oakland, CA 94607
(707) 576-0829

LICENSED ARCHITECT
JIM THEISS
LICENSE # C22643
EXP JUNE 30, 2023
STATE OF CALIFORNIA
SIGNED: JUNE 24, 2022

LIBERTY HIGH SCHOOL

NEW CLASSROOM BUILDINGS

850 2ND STREET
BRENTWOOD, CA
94513

LIBERTY UNION HIGH SCHOOL DISTRICT

DSA APP NO. 01-119994

ARCH PROJECT NO:	1925.00
DRAWN BY:	JDS & PAG
DRAWING SCALE:	AS NOTED
PTN: 61721-83	FILE NO: 7-H4

CONSTRUCTION DOCUMENTS

JUNE 24, 2022

SHEET TITLE

ROOF DETAILS

SHEET NUMBER

A-9.6

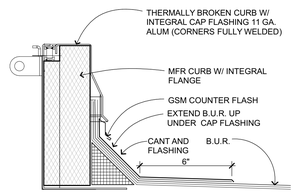

ACCESS HATCH CURB

3" = 1'-0" 1870.00 **26**

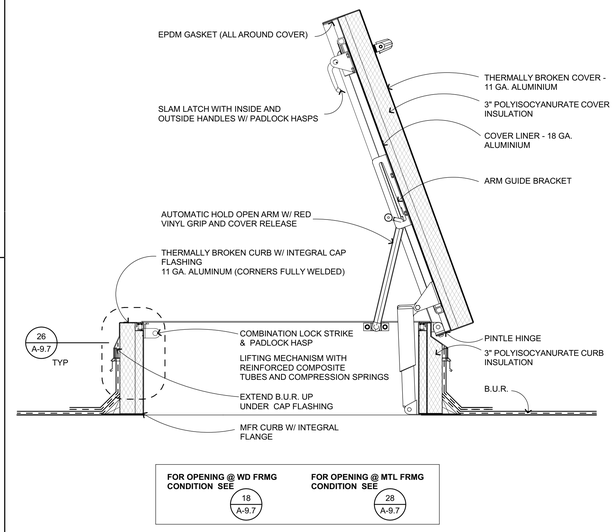

ROOF ACCESS HATCH

1 1/2"= 1'-0" B302301 **17**

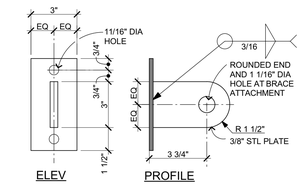

UPPER WALL BRACKET

3" = 1'-0" B205001 **11**

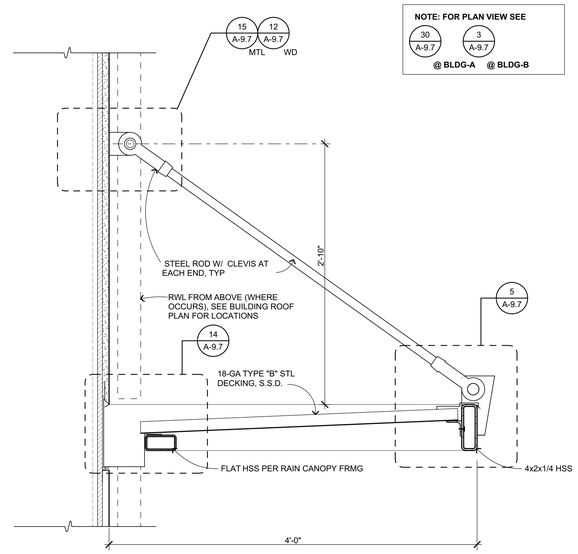

TYP RAIN CANOPY

1 1/2"= 1'-0" B205110 **2**

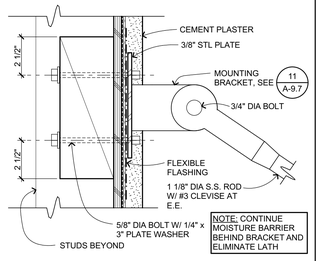

UPPER BRACKET INSTALLATION @ WD FRMG

3" = 1'-0" B205002_B **12**

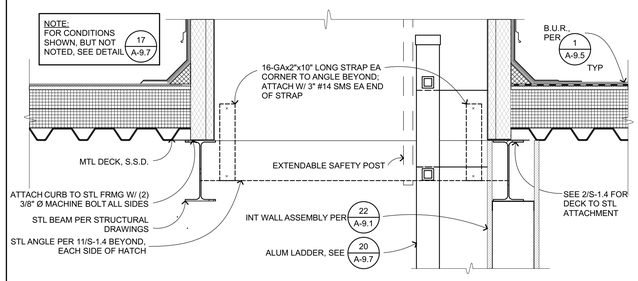

ROOF HATCH AT MTL FRMG

1 1/2"= 1'-0" B302303_A **28**

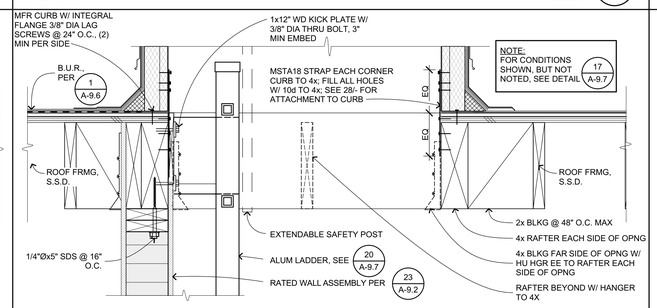

ROOF HATCH AT WD FRMG

1 1/2"= 1'-0" B302303_B **18**

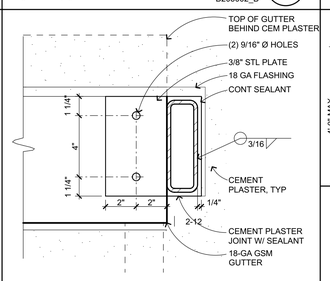

RAIN CANOPY END ATTACHMENT

3" = 1'-0" B205114_A 1925.00 **13**

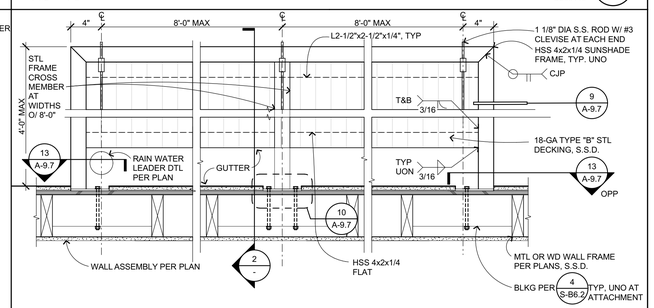

BLDG-B RAIN CANOPY PLAN

1 1/2"= 1'-0" B205111_B 1925.00 **3**

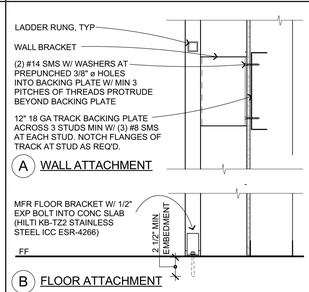

LADDER ATT AT MTL STUD

1 1/2"= 1'-0" C103402 **24**

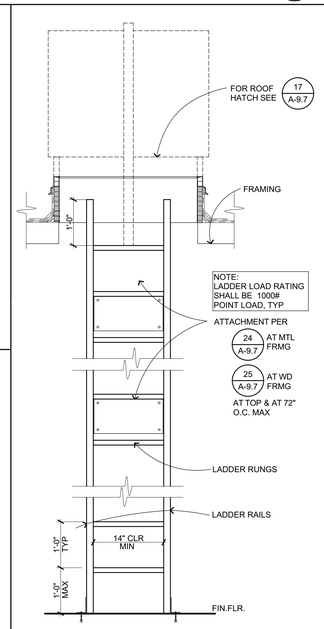

INT ALUM LADDER

3/4" = 1'-0" C103401 **20**

RAIN CANOPY GUTTER

3" = 1'-0" B205115 **14**

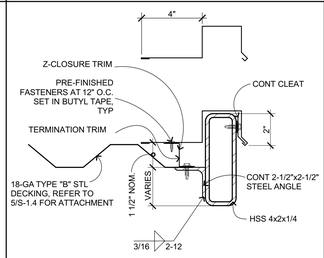

RAIN CANOPY RAKE

3" = 1'-0" B205113 **9**

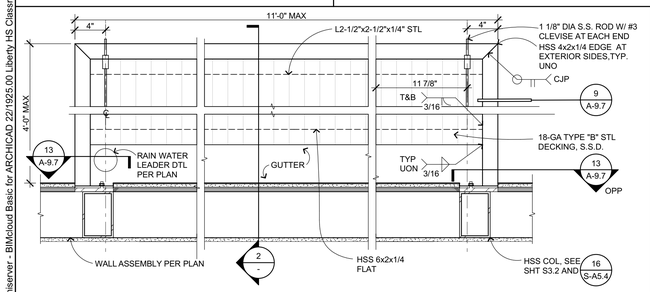

BLDG-A RAIN CANOPY PLAN

1 1/2"= 1'-0" B205111_A 1925.00 **30**

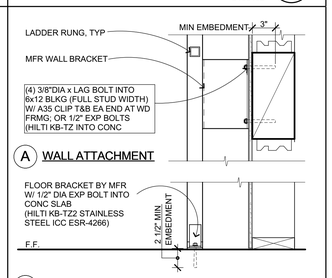

LADDER ATT AT WD

1 1/2"= 1'-0" C103403 **25**

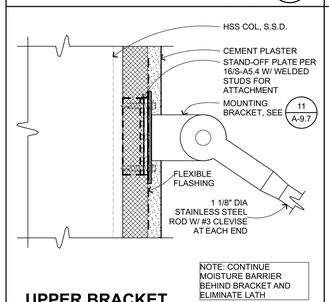

UPPER BRACKET INSTALLATION @ MTL FRMG

3" = 1'-0" B205002_A **15**

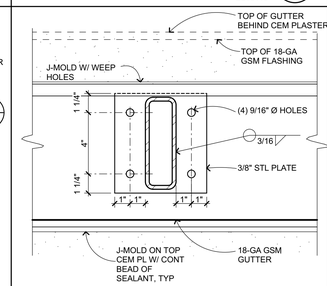

RAIN CANOPY INTER ATTACHMENT

3" = 1'-0" B205114_B 1925.00 **10**

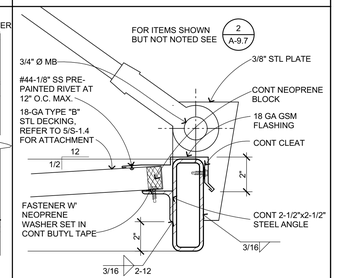

RAIN CANOPY HEAD

3" = 1'-0" B205112 **5**

IDENTIFICATION STAMP
DIV. OF THE STATE ARCHITECT
APP: 01-119994 INC:
REVIEWED FOR
SS ☑ FLS ☑ ACS ☑
DATE: 08/16/2022

QUATTROCCHI KWOK ARCHITECTS
Main:
636 Fifth Street, Santa Rosa, CA 95404
East Bay:
55 Harrison Street, Suite 525, Oakland, CA 94607
(707) 576-0829

LICENSED ARCHITECT
JIM THEISS
LICENSE # C22643
EXP JUNE 30, 2023
STATE OF CALIFORNIA
SIGNED: JUNE 24, 2022

LIBERTY HIGH SCHOOL

NEW CLASSROOM BUILDINGS

850 2ND STREET
BRENTWOOD, CA
94513

LIBERTY UNION HIGH SCHOOL DISTRICT

DSA APP NO. 01-119994

ARCH PROJECT NO:	1925.00
DRAWN BY:	JDS & PAG
DRAWING SCALE:	AS NOTED
PTN: 61721-83	FILE NO: 7-H4

CONSTRUCTION DOCUMENTS

JUNE 24, 2022

SHEET TITLE

CANOPY AND HATCH DETAILS

SHEET NUMBER

A-9.7

BIMcloud: archiserver - BIMcloud Basic for ARCHICAD 22/1925.00 Liberty HS Classroom: BLDG A AC22 7/27/2022-5:32 PM

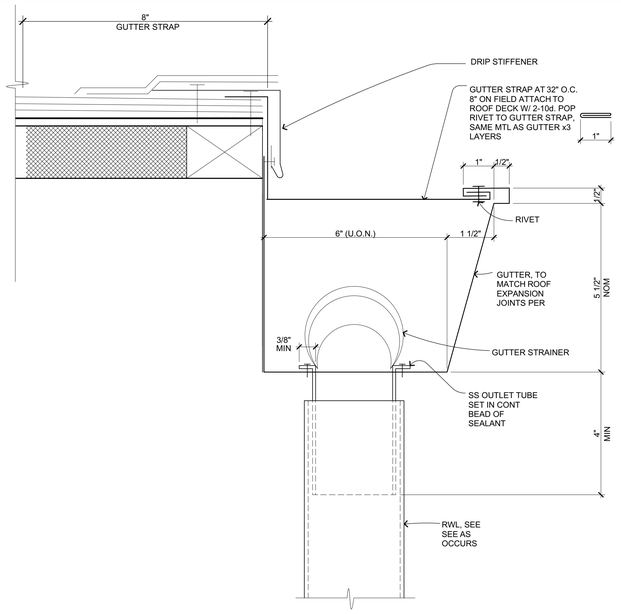

TYP GUTTER AT BUR

6" = 1'-0" B304104 **22**

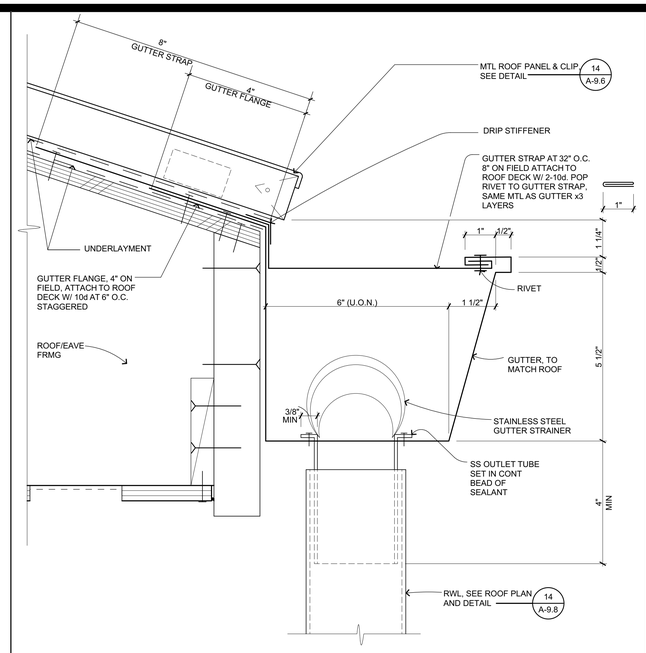

GUTTER AT WOOD FRAMING

6" = 1'-0" B304102 **12**

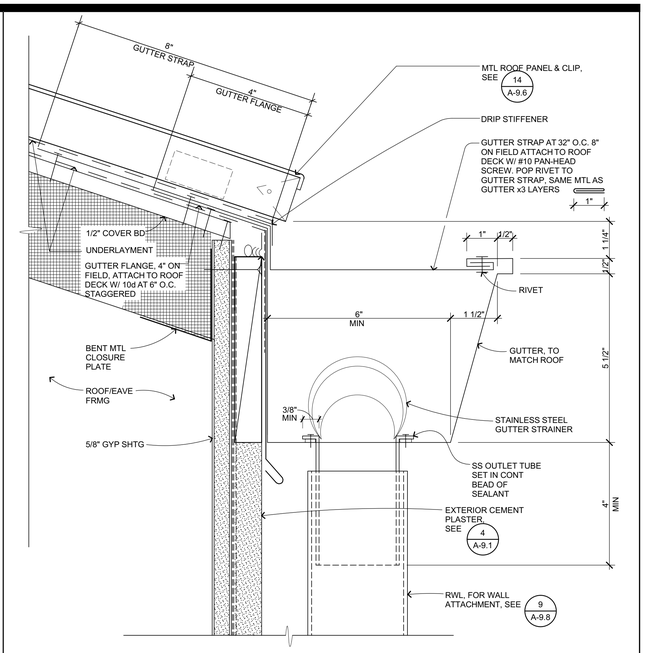

GUTTER- METAL ROOFING/FRAMING

6" = 1'-0" B304101 **2**

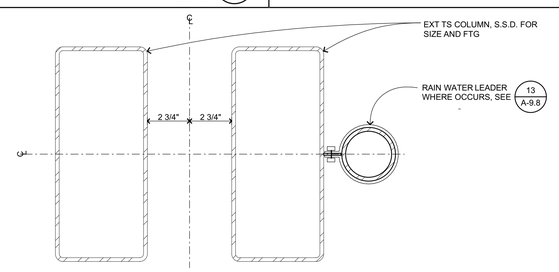

EXT DOUBLE COLUMN

3" = 1'-0" 1925.00 **18**

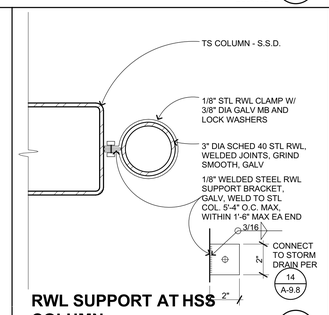

RWL SUPPORT AT HSS COLUMN

3" = 1'-0" B304205 **13**

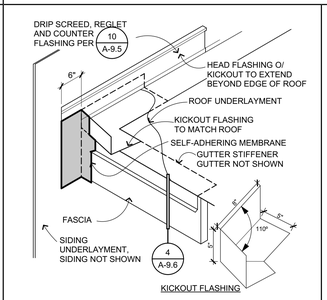

KICKOUT FLASHING

1 1/2"= 1'-0" B301220 **8**

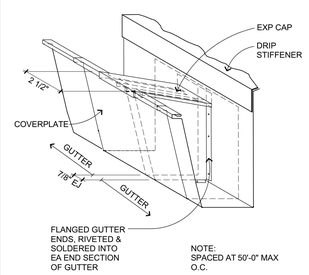

GUTTER EXPANSION JOINT

3" = 1'-0" B304103 **3**

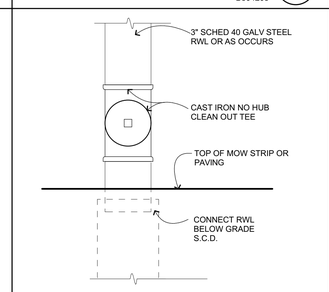

RWL AT GRADE

3" = 1'-0" B304209.1 **14**

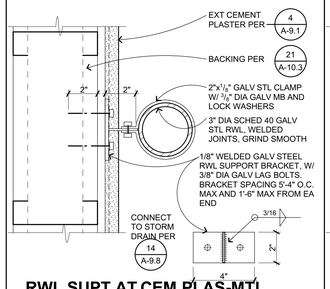

RWL SUPT AT CEM PLAS-MTL FRMG

3" = 1'-0" B304202 **9**

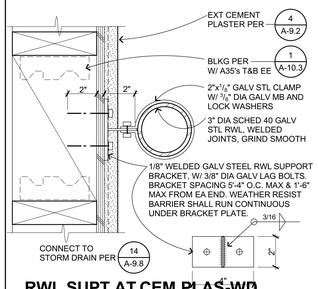

RWL SUPT AT CEM PLAS-WD FRMG

3" = 1'-0" B304201 **4**

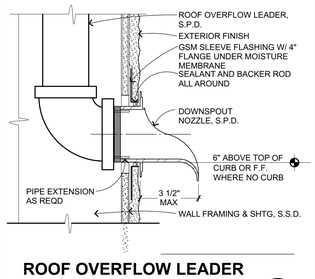

ROOF OVERFLOW LEADER NOZZLE

3" = 1'-0" B304214 **20**

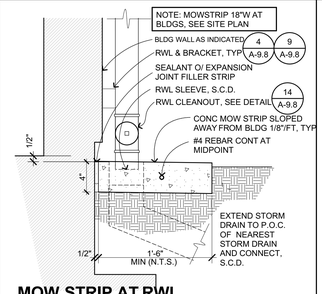

MOW STRIP AT RWL CONNECTION

1 1/2"= 1'-0" G203107A **10**

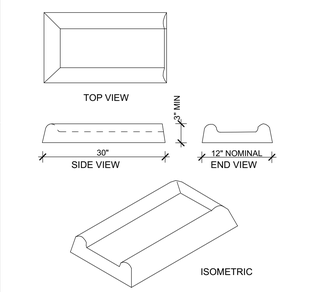

CONCRETE SPLASH BLOCK

3" = 1'-0" B304217 **5**

IDENTIFICATION STAMP
DIV. OF THE STATE ARCHITECT
APP: 01-119994 INC:
REVIEWED FOR
SS ☑ FLS ☑ ACS ☑
DATE: 08/16/2022

QUATTROCCHI KWOK ARCHITECTS
Main:
636 Fifth Street, Santa Rosa, CA 95404
East Bay:
55 Harrison Street, Suite 525,
Oakland, CA 94607
(707) 576-0829

LICENSED ARCHITECT
JIM THEISS
LICENSE # C22643
EXP JUNE 30, 2023
STATE OF CALIFORNIA

SIGNED: JUNE 24, 2022

LIBERTY HIGH SCHOOL

NEW CLASSROOM BUILDINGS

850 2ND STREET
BRENTWOOD, CA
94513

LIBERTY UNION HIGH SCHOOL DISTRICT

DSA APP NO. 01-119994

ARCH PROJECT NO:	1925.00
DRAWN BY:	JDS
DRAWING SCALE:	AS NOTED
PTN: 61721-83	FILE NO: 7-H4

CONSTRUCTION DOCUMENTS

JUNE 24, 2022

SHEET TITLE

GUTTER AND RWL DETAILS

SHEET NUMBER

A-9.8

BIMcloud: archiserver - BIMcloud Basic for ARCHICAD 22/1925.00 Liberty HS Classroom, BLDG A, AC22:7/27/2022:5:32 PM

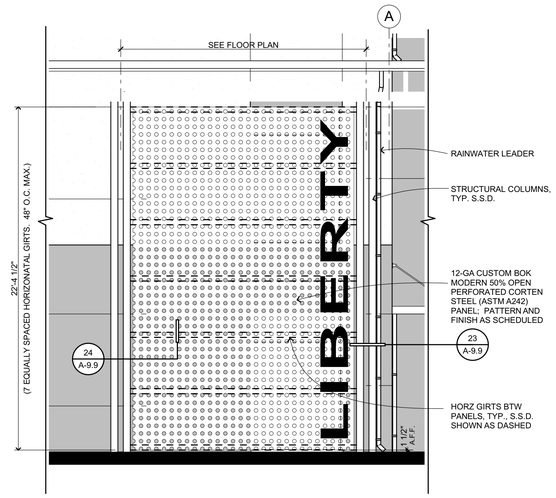

PERFORATED METAL PANEL ELEVATION

1/4" = 1'-0" 1925.00 **22**

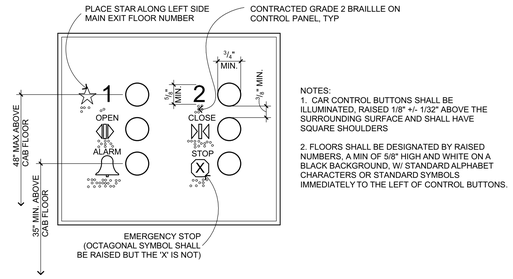

NOTES:
1. CAR CONTROL BUTTONS SHALL BE ILLUMINATED, RAISED 1/8" +/- 1/32" ABOVE THE SURROUNDING SURFACE AND SHALL HAVE SQUARE SHOULDERS

2. FLOORS SHALL BE DESIGNATED BY RAISED NUMBERS, A MIN OF 5/8" HIGH AND WHITE ON A BLACK BACKGROUND, W/ STANDARD ALPHABET CHARACTERS OR STANDARD SYMBOLS IMMEDIATELY TO THE LEFT OF CONTROL BUTTONS.

ELEV CONTROL PANEL

6" = 1'-0" D101102 **11**

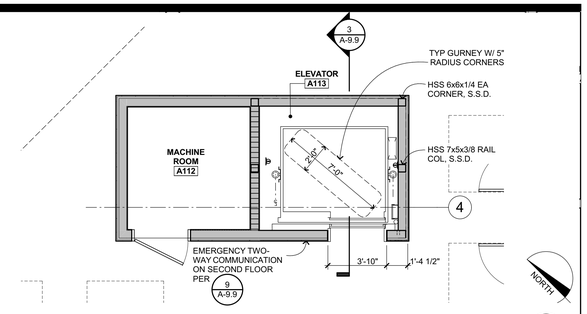

ENLARGED ELEVATOR PLAN

1/4" = 1'-0" **1**

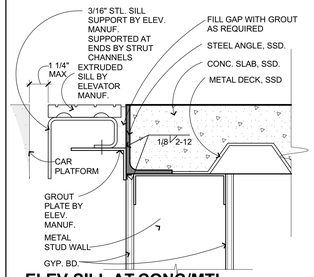

ELEV SILL AT CONC/MTL DECK

3" = 1'-0" C201201 **17**

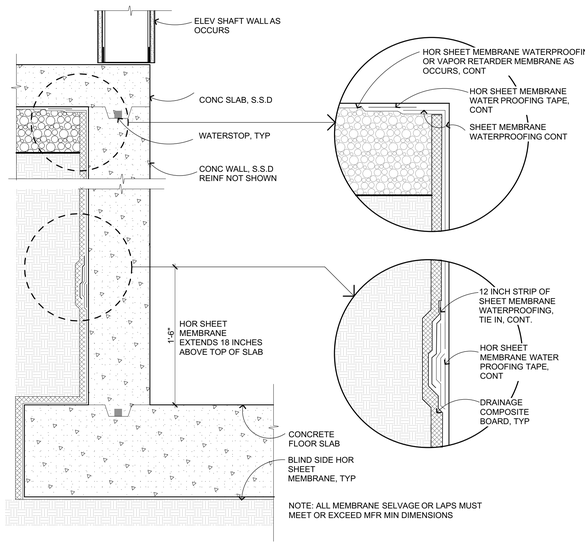

ELEV PIT

1 1/2"= 1'-0" D101104 **8**

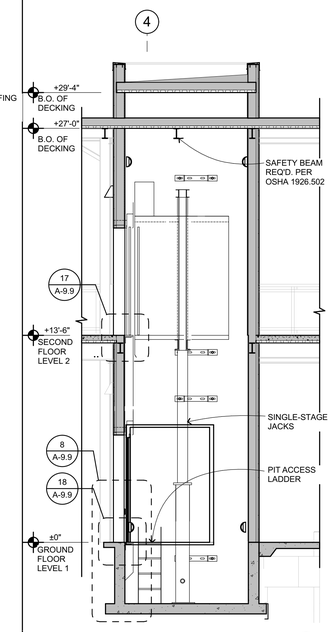

ELEVATOR SECTION

1/4" = 1'-0" **3**

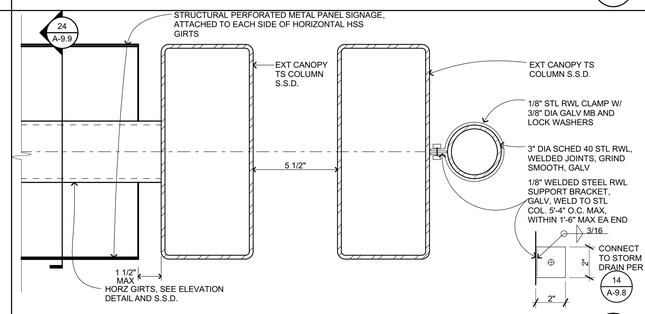

PERFORATED METAL PANEL SECTION

3" = 1'-0" 1925.00 **23**

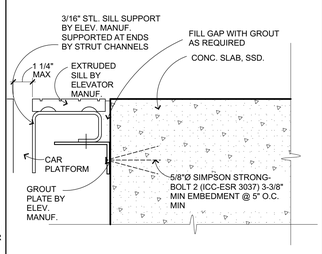

ELEV SILL AT CONC SLAB

3" = 1'-0" C201202 **18**

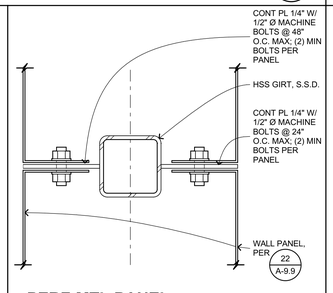

PERF MTL PANEL ATTACHMENT

3" = 1'-0" 1925.00 **24**

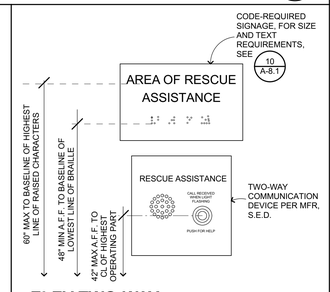

ELEV TWO-WAY COMMUNICATION

3" = 1'-0" 1268.04 **9**

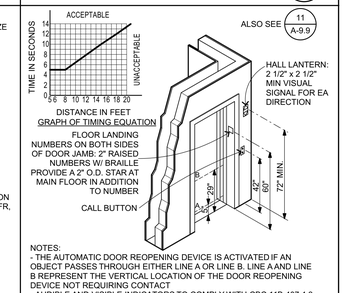

NOTES:
- THE AUTOMATIC DOOR REOPENING DEVICE IS ACTIVATED IF AN OBJECT PASSES THROUGH EITHER LINE A OR LINE B. LINE A AND LINE B REPRESENT THE VERTICAL LOCATION OF THE DOOR REOPENING DEVICE NOT REQUIRING CONTACT
- AUDIBLE AND VISIBLE INDICATORS TO COMPLY WITH CBC 11B-407.4.8

ELEVATOR ENTRY

1/4" = 1'-0" D101101 **4**

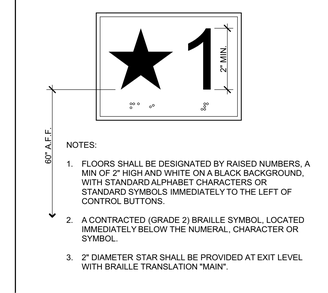

NOTES:

1. FLOORS SHALL BE DESIGNATED BY RAISED NUMBERS, A MIN OF 2" HIGH AND WHITE ON A BLACK BACKGROUND, WITH STANDARD ALPHABET CHARACTERS OR STANDARD SYMBOLS IMMEDIATELY TO THE LEFT OF CONTROL BUTTONS.
2. A CONTRACTED (GRADE 2) BRAILLE SYMBOL, LOCATED IMMEDIATELY BELOW THE NUMERAL, CHARACTER OR SYMBOL.
3. 2" DIAMETER STAR SHALL BE PROVIDED AT EXIT LEVEL WITH BRAILLE TRANSLATION "MAIN".

FLOOR DESIGNATION

6" = 1'-0" D101103 **5**

IDENTIFICATION STAMP
DIV. OF THE STATE ARCHITECT
APP: 01-119994 INC:
REVIEWED FOR
SS ☑ FLS ☑ ACS ☑
DATE: 08/16/2022

QUATTROCCHI KWOK ARCHITECTS
Main:
636 Fifth Street, Santa Rosa, CA 95404
East Bay:
55 Harrison Street, Suite 525, Oakland, CA 94607
(707) 576-0829

LICENSED ARCHITECT
JIM THEISS
LICENSE # C22643
EXP JUNE 30, 2023
STATE OF CALIFORNIA
SIGNED: JUNE 24, 2022

LIBERTY HIGH SCHOOL

NEW CLASSROOM BUILDINGS

850 2ND STREET
BRENTWOOD, CA 94513

LIBERTY UNION HIGH SCHOOL DISTRICT

DSA APP NO. 01-119994

ARCH PROJECT NO:	1925.00
DRAWN BY:	JDS
DRAWING SCALE:	AS SHOWN
PTN: 61721-83	FILE NO: 7-H4

CONSTRUCTION DOCUMENTS

JUNE 24, 2022

SHEET TITLE

ELEVATOR, LIFT AND DETAILS

SHEET NUMBER

A-9.9

BIMcloud: archiserver - BIMcloud Basic for ARCHICAD 22/1925.00 Liberty HS Classroom, BLDG A, AC22 7/27/2022-5:32 PM

PER DSA IR 25-2.13 (11/09/17)

1. CEILING SYSTEM GENERAL NOTES:
1.01 Ceiling system components shall comply with ASTM C635-07 and Section 5.1 of ASTM E580-10a.
1.02 The ceiling grid system must be rated heavy duty as defined by ASTM C635-08.
1.03 Ceiling systems ARMSTRONG WORLD INDUSTRIES PRELUDE XL, ICC ESR 1308
a. Main Runner: 7301.
b. Cross Runner: XL7340.
1.04 Seismic Wall Clip: BERC2 clip
1.05 Ceiling panels shall not support any light fixtures, air terminals or devices.
1.06 For ceiling installations utilizing acoustical tile panels of mineral or glass fiber, it is not mandatory to provide ¾" clearance between the acoustical tile panels and the wall on the sides of the ceiling which are free to slip. For all other ceiling panel types, provide ¾" clearance between the ceiling panel and the wall on the sides of the ceiling free to slip.

2. MATERIALS:
2.01 Ceiling wire shall be Class 1 zinc coated (galvanized) carbon steel conforming to ASTM A641-09a. Wire shall be #12 gage (0.106" diameter) with soft temper and minimum tensile strength = 70 ksi.
2.02 Galvanized sheet steel (including that used for metal stud and track compression struts/post) shall conform to ASTM A653-11, or other equivalent sheet steel listed in Section A2.1 of the North American Specification for the Design of Cold-Formed Steel Structural Members 2007, including supplement 2 dated 2010 (AISI S100-07/S2-10). Material 43 mil (18 gage) and lighter shall have minimum yield strength of 33 ksi.
Material 54 mil (16 gage) and heavier shall have a minimum yield strength of 50 ksi.
2.03 Electrical metallic tube (EMT) shall be ANSI C80.3/UL 797 carbon steel with G90 galvanizing. EMT shall have minimum yield strength (Fy) of 30 ksi and minimum ultimate strength (Fu) of 48 ksi.

3. ATTACHMENT OF HANGER AND BRACING WIRES:
3.01 Separate all ceiling hanger and bracing wires at least six (6) inches from all unbraced ducts, pipes, conduit, etc.
3.02 Hanger and bracing wires shall not attach to or bend around obstructions including but not limited to: piping, ductwork, conduit and equipment.
3.03 Hanger wires that are more than one (horizontal) in six (vertical) out of plumb shall have counter-sloping wires.
3.04 Slack safety wires shall be considered hanger wires for installation and testing requirements.
3.05 Hanger and bracing wire anchorage to the structure shall be installed in such a manner that the direction of the anchorage aligns closely with the direction of the wire. (e.g. bracing wire ceiling clips must be bent as shown in the details and rotated as required to align closely with the direction of the wire, screw eyes in wood must be installed so they align closely with the direction of the wire, etc.)

4. FASTENERS AND WELDING:
4.01 Sheet metal screws shall comply with ASTM C1513-10, ASME B18.6.4-89 (R2005). Penetration of screws through joined material shall not be less than three exposed threads.
4.02 Expansion anchors shall be:
a. Simpson Strong -Bolt 2 (ICC ESR 3037)
b. Hilti KB1 (IAPMO ER 678)
4.03 Power-Actuated Fasteners shall be:
a. Hilti X-U (ICC ESR-2269)
4.04 If not otherwise specified in the evaluation report, power-actuated fasteners installed in steel shall be installed so the entire pointed end of the fastener is driven through the steel member.
4.05 Power-actuated fasteners in concrete are not permitted for bracing wires.
4.06 Concrete reinforcement and prestressing tendons shall be located by non-destructive means prior to installing post - installed anchor.
4.07 Welding shall be in accordance with AWS D1.3 using E60XX series electrodes.

5. TESTING: All field testing must be performed in the presence of the project inspector.
5.01 Post-installed anchors in concrete used to support hanger wires shall be tested at a frequency of 10 percent. Power actuated fasteners in concrete shall be field tested for 200 lbs. in tension. All other post-installed anchors in concrete shall be tested in accordance with CBC Section 1913A.7.
5.02 Post-installed anchors in concrete used to attach bracing wires shall be tested at a frequency of 50 percent in accordance with CBC Section 1913A.7.

6. LIGHT FIXTURES:
6.01 All light fixtures shall be positively attached to the ceiling suspension systems by mechanical means to resist a horizontal force equal to the weight of the fixture. A minimum of two screws or approved fasteners are required at each light fixture, per ASTM E580, Section 5.3.1.
6.02 Surface-mounted light fixtures shall be attached to the main runner with at least two positive clamping devices. The clamping device shall completely surround the supporting ceiling runner and be made of steel with a minimum thickness of #14 gage. Rotational spring catches do not comply. A #12 gage slack safety wire shall be connected from each clamping device to the structure above. Provide additional supports when light fixtures are eight (8) feet or longer or exceed 56 lb. Maximum spacing between supports shall not exceed eight (8) feet.
6.03 Light fixtures weighing less than or equal to 10 lb. shall have a minimum of one (1) #12 gage slack safety wire connected from the fixture housing to the structure above.
6.04 Light fixtures weighing less than or equal to 10 lb. shall have a minimum of one (1) #12 gage slack safety wire connected from the fixture housing to the structure above.
6.05 Light fixtures weighing greater than 10 lb. but less than or equal to 56 lbs. may be supported directly on the ceiling runners, but they shall have a minimum of two (2) #12 gage slack safety wires connected from the fixture housing at diagonal corners to the structure above. Exception: All light fixtures greater than two by four feet weighing less than 56 lbs. shall have a #12 gage slack safety wire at each corner.
6.06 All Light fixtures weighing greater than 56 lb. shall be independently supported by not less than four (4) taut #12 gage hanger wires (one at each corner) attached from the fixture housing to the structure above or other approved hangers. The four (4) taut #12 gage wires or other approved hangers, including their attachment to the structure above, shall be capable of supporting four (4) times the weight of the fixture.

7. SERVICES WITHIN THE CEILING:
7.01 All flexible sprinkler hose fitting mounting brackets, ceiling-mounted air terminals or other services shall be positively attached to the ceiling suspension systems by mechanical means. Screws or approved fasteners are required. A minimum of two attachments are required at each component.
7.02 Ceiling-mounted air terminals or other services weighing less than or equal to 20 lb. shall have one (1) #12 gage slack safety wire attached from the terminal or service to the structure above.
7.03 Flexible sprinkler hose fittings, ceiling-mounted air terminals or other services weighing more than 20 lb. but less than or equal to 56 lb. shall have two (2) #12 gage slack safety wires (at diagonal corners) connected from the terminal or service to the structure above.
7.04 Flexible sprinkler hose fittings, ceiling-mounted air terminals or other services weighing more than 56 lb. shall be supported directly from the structure above by not less than four (4) taut #12 gage hanger wires attached from the terminal or service to the structure above or other approved hangers.

8. OTHER DEVICES WITHIN THE CEILING:
8.01 All lightweight miscellaneous devices, such as strobe lights, occupancy sensors, speakers, exit signs, etc., shall be attached to the ceiling grid. In addition, devices weighing more than 10 lbs. shall have a #12 gage slack safety wire anchored to the structure above. Devices weighing more than 20 lb. shall be supported independently from the structure above.

TYP SUSP CLG NOTES
1/4" = 1'-0" C303209_2019 1925.00 **28**

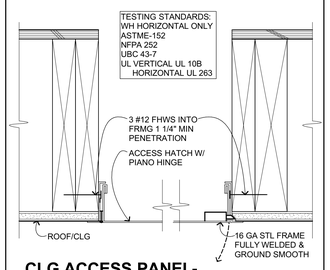

CLG ACCESS PANEL-NONRATED
3" = 1'-0" C303302 **21**

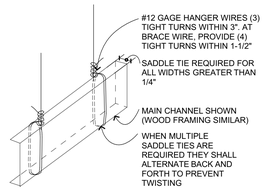

DSA IR 25.2-13 FIGURE 4.29

SADDLE TIE DETAIL
3" = 1'-0" C303221 **16**

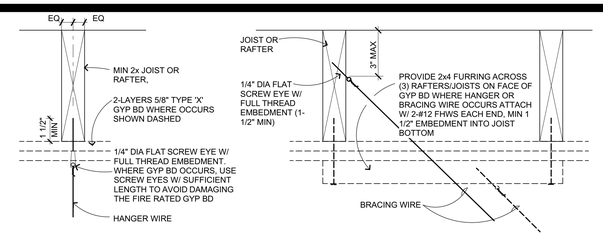

HANGER OR BRACING WIRE ANCHORS TO THE STRUCTURE SHOULD BE INSTALLED IN SUCH A MANNER THAT THE DIRECTION OF THE ANCHOR ALIGNS AS CLOSELY AS POSSIBLE W/ THE DIRECTION OF THE WIRE. HANGER AND BRACING WIRES SHALL NOT ATTACH TO OR BEND AROUND OBSTRUCTIONS INCLUDING BUT NOT LIMITED TO: PIPING, DUCTWORK, CONDUIT, AND EQUIPMENT.

FOR TYP WIRE FASTENING AT EA END OF HANGER AND BRACING WIRE CONNECTIONS SEE 29 / A-10.1

B TYPICAL HANGING AND BRACING WIRES DSA IR 25.2-13 FIGURES 4.25 & 4.35

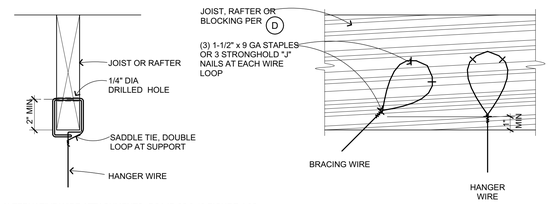

C ALTERNATIVE WIRE ATTACHMENTS DSA IR 25.2-13 FIGURE 4.25

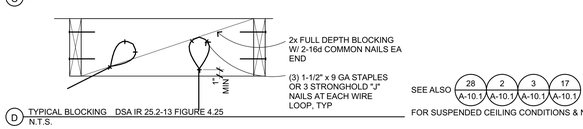

SEE ALSO 28 / A-10.1, 2 / A-10.1, 3 / A-10.1, 17 / A-10.1

D TYPICAL BLOCKING DSA IR 25.2-13 FIGURE 4.25
N.T.S.

FOR SUSPENDED CEILING CONDITIONS & NOTES

SUSP ACOUS CLG- WD FRMG
3" = 1'-0" C303204 **7**

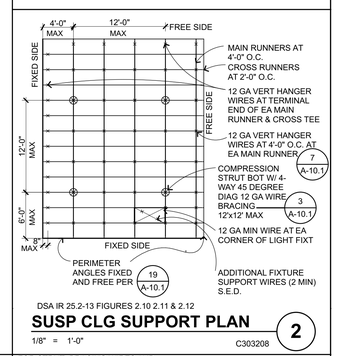

DSA IR 25.2-13 FIGURES 2.10.2.11 & 2.12

SUSP CLG SUPPORT PLAN
1/8" = 1'-0" C303208 **2**

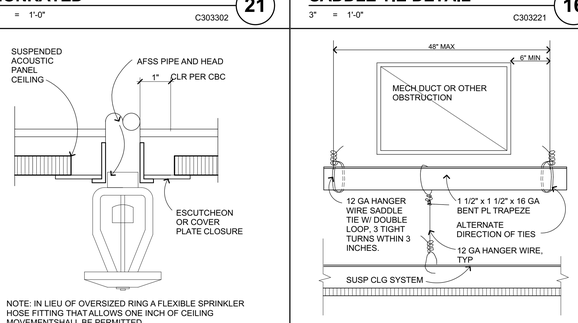

SUSP ACOUS CLG TRAPEZE
3" = 1'-0" C303203 **17**

NOTE: IN LIEU OF OVERSIZED RING A FLEXIBLE SPRINKLER HOSE FITTING THAT ALLOWS ONE INCH OF CEILING MOVEMENTSHALL BE PERMITTED

FIRE SPRINKLER HD PLATE
6" = 1'-0" C303217 **22**

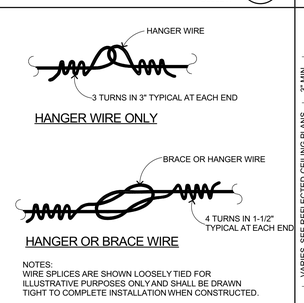

NOTES:
WIRE SPLICES ARE SHOWN LOOSELY TIED FOR ILLUSTRATIVE PURPOSES ONLY AND SHALL BE DRAWN TIGHT TO COMPLETE INSTALLATION WHEN CONSTRUCTED.

WIRE SPLICE DETAIL
3" = 1'-0" E201115 **23**

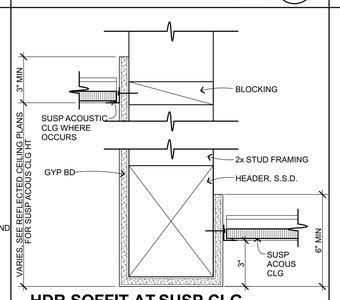

HDR SOFFIT AT SUSP CLG-WD
3" = 1'-0" C303210_A **18**

PER DSA IR-25.13, SHEET 3.20

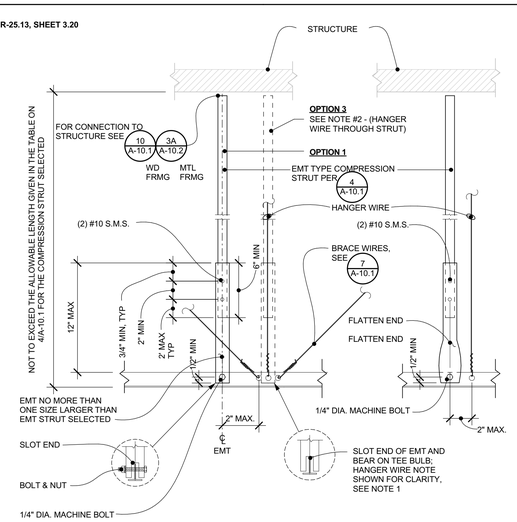

NOTES:
1. MACHINE BOLT IS NOT REQUIRED ON OPTION 3
2. OPTION 3 IS PERMITTED ONLY WHERE THE ROOF OR FLOOR STRUCTURE IS SAWN TIBER WITHOUT GYP BD

EMT COMPRESSION STRUT
1/4" = 1'-0" C303202A.1 **9**

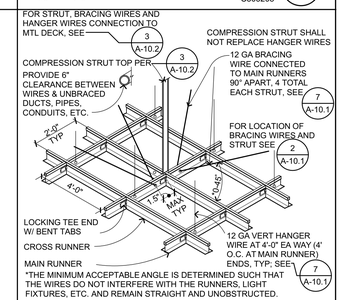

*THE MINIMUM ACCEPTABLE ANGLE IS DETERMINED SUCH THAT THE WIRES DO NOT INTERFERE WITH THE RUNNERS, LIGHT FIXTURES, ETC. AND REMAIN STRAIGHT AND UNOBSTRUCTED.

DSA IR 25.2-13 FIGURE 2.35

CROSS-TEE INTERSECTION
1 1/2"= 1'-0" C303201 **3**

PER IR 25-2

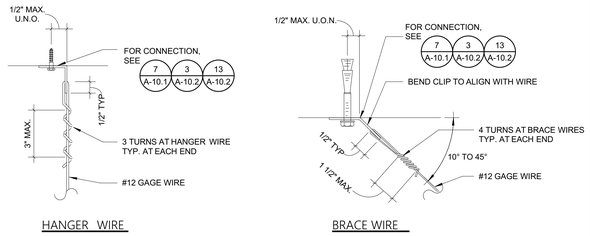

TYP HANGER AND BRACE WIRE CONNECTION
1/8" = 1'-0" **29**

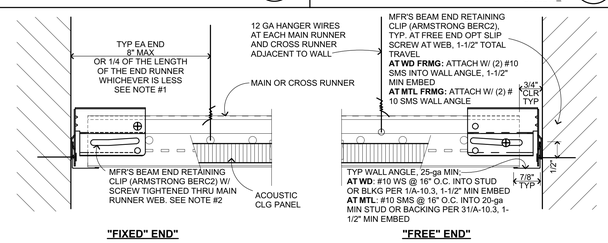

BASIS OF DESIGN: ARMSTRONG PRELUDE XL SEISMIC Rx. ICC ESR 1308. MFR'S ITEM NUMBERS: MAIN RUNNER - 7301WH; CROSS RUNNER - XL7380WH
NOTE 1: PERIMETER WIRES ARE NOT REQUIRED WHEN LENGTH OF TEE IS 8" OR LESS.
NOTE 2: PER IR 25-2.13 FIGURE 2.60 ALLOWS A SMALLER ANGLE WHEN USED IN CONJUCTION WITH A PROPRIETARY SEISMIC CLIP. ARMSTRONG BERC2 CLIP (ICC ESR 1308) IS USED AS BASIS OF DESIGN AND IS DETAILED AS SHOWN.

SUSP CLG PERIMETER- MFR CLIP
6" = 1'-0" C303206 **19**

PER DSA IR 25-2.13 FIGURE 3.21

FOR EMT COMPRESSION STRUT REFER TO 9 / A-10.1

EMT COMPRESSION STRUT	MAXIMUM LENGTH
1/2" DIA EMT (0.042" WALL TH)	3'-11"
3/4" DIA EMT (0.049" WALL TH)	6'-4"
1" DIA EMT (0.057" WALL TH)	9'-9"
1 1/4" DIA EMT (0.065" WALL TH)	12'-9"
1-1/2" DIA EMT (0.065" WALL TH)	14'-9"
2" DIA EMT (0.065" WALL TH)	18'-10"

FOR CHANNEL COMPRESSION STRUT REFER TO 10 / A-10.1

CHANNEL COMPRESSION STRUT	MAXIMUM LENGTH
250S125-33	5'-0"
250S137-33	6'-10"
362S137-33	8'-0"
250S137-43	8'-10"
400S137-43	10'-10"

COMPRESSION STRUT TABLE
1" = 1'-0" C303214 **4**

PER DSA IR-25-13

FOR COMPRESSION STRUT SIZING SEE 4 / A-10.1

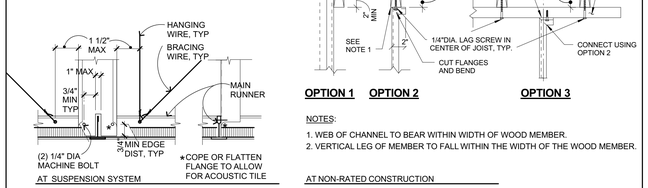

NOTES:
1. WEB OF CHANNEL TO BEAR WITHIN WIDTH OF WOOD MEMBER.
2. VERTICAL LEG OF MEMBER TO FALL WITHIN THE WIDTH OF THE WOOD MEMBER.

AT NON-RATED CONSTRUCTION

ALT MTL CHANNEL COMPRESSION STRUT
3" = 1'-0" C303202_A **10**

IDENTIFICATION STAMP
DIV. OF THE STATE ARCHITECT
APP: 01-119994 INC:
REVIEWED FOR
SS ☑ FLS ☑ ACS ☑
DATE: 08/16/2022

QUATTROCCHI KWOK ARCHITECTS
Main:
636 Fifth Street, Santa Rosa, CA 95404
East Bay:
55 Harrison Street, Suite 525, Oakland, CA 94607
(707) 576-0829

LICENSED ARCHITECT
JIM THEISS
LICENSE # C22643
EXP JUNE 30, 2023
STATE OF CALIFORNIA
SIGNED: JUNE 24, 2022

LIBERTY HIGH SCHOOL

NEW CLASSROOM BUILDINGS

850 2ND STREET
BRENTWOOD, CA 94513

LIBERTY UNION HIGH SCHOOL DISTRICT

DSA APP NO. 01-119994
ARCH PROJECT NO: 1925.00
DRAWN BY: JDS & PAG
DRAWING SCALE: AS NOTED
PTN: 61721-83 FILE NO: 7-H4
CONSTRUCTION DOCUMENTS
JUNE 24, 2022

SHEET TITLE
CEILING DETAILS WD

SHEET NUMBER
A-10.1

BIMcloud: archiserver - BIMcloud Basic for ARCHICAD 22/1925.00 Liberty HS Classroom, BLDG A, AC22.7/27/2022 5:32 PM

DSA IR 25.2-13 FIG 4.24
TYP ALL OPTIONS: APPLICABLE FOR PERIMETER WIRE ATTACHMENT OR WHERE OBSTRUCTIONS(S) PREVENT ATTACHMENT TO STRUCTURE ABOVE

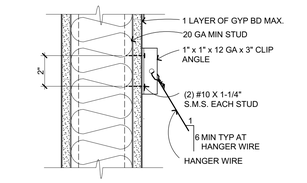

A HANGER WIRE OPTION 1

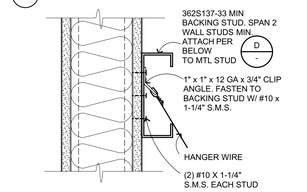

B HANGER WIRE OPTION 2

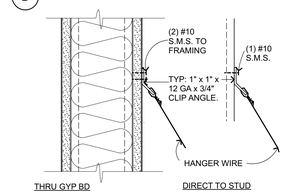

C HANGER WIRE OPTION 3

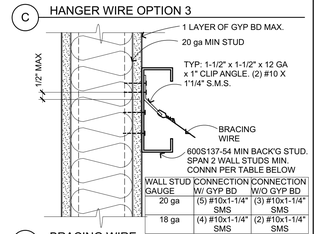

WALL STUD GAUGE	CONNECTION W/ GYP BD	CONNECTION W/O GYP BD
20 ga	(5) #10x1-1/4" SMS	(3) #10x1-1/4" SMS
18 ga	(4) #10x1-1/4" SMS	(2) #10x1-1/4" SMS

D BRACING WIRE

*NOTE: CLIP ANGLE CAN BE ATTACHED TO WALL STUD FLANGE WHEN THE FOLLOWING CONDITIONS ARE MET:
-WALL STUD IS 18ga MIN AND CAPABLE OF SUPPORTING THE BRACE FORCE.
- THE BRACE WIRE ALIGNS WITH THE WALL STUD WEB.

WIRES TO MTL STUD

3" = 1'-0" C303219 **13**

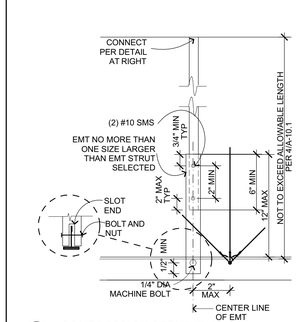

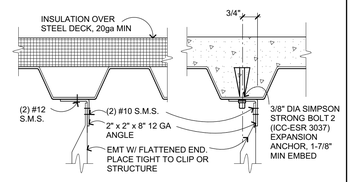

STEEL DECK W/ INSULATION — DSA IR 25.2-13 FIGURE 5.20 OPTION 1

STEEL DECK W/ CONC FILL — DSA IR 25.2-13 FIGURE 5.21 OPTION 1

FOR ALTERNATE METAL STUD COMPRESSION STRUT SEE 4 / A-10.2

A COMPRESSION STRUT (EMT) DSA IR 25.2-13 FIGURE 3.20 OPTION 1

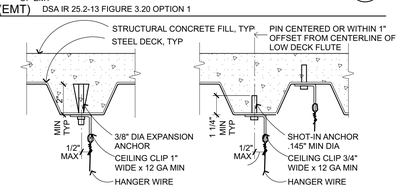

HANGER OR BRACING WIRE ANCHORS TO THE STRUCTURE SHOULD BE INSTALLED IN SUCH A MANNER THAT THE DIRECTION OF THE ANCHOR ALIGNS AS CLOSELY AS POSSIBLE W/ THE DIRECTION OF THE WIRE. HANGER AND BRACING WIRES SHALL NOT ATTACHTO OR BEND AROUND OBSTRUCTIONS INCLUDING BUT NOT LIMITED TO :PIPING, DUCTWORK, CONDUIT AND EQUIPMENT.

B TYPICAL HANGER WIRE AT STEEL DECK WITH CONCRETE FILL DSA IR 25.2-13 FIGURE 4.21 OPTIONS 1 & 2

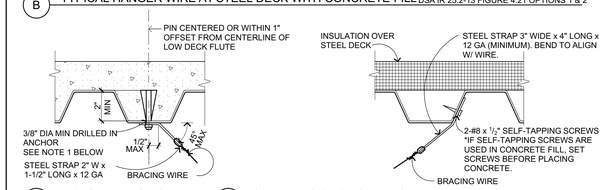

C TYPICAL BRACING WIRE
DSA IR 25.2-13 FIGURE 4.31 OPTION 1

D STEEL DECK W/ INSULATION20 GA MIN DECK
DSA IR 25.2-13 FIGURE 4.20

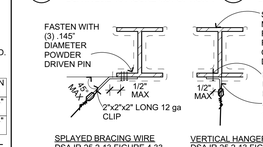

SPLAYED BRACING WIRE
DSA IR 25.2-13 FIGURE 4.33

VERTICAL HANGER WIRE
DSA IR 25.2-13 FIGURE 4.23

NOTE 1: WHEN DRILLED-IN CONCRETE ANCHORS OR SHOT-IN ANCHORS ARE USED IN REINFORCED CONCRETE FOR HANGER WIRES, 1 OUT OF10 ANCHORS MUST BE FIELD TESTED FOR 200 lbs IN TENSION. WHEN DRILLED-IN CONCRETE ANCHORS ARE USED FOR BRACING WIRES, 1 OUT OF 2 ANCHORS MUST BE FIELD TESTED FOR 440 lbs. IN TENSION. SHOT-IN ANCHORS IN CONCRETE ARE NOT PERMITTED FOR BRACING WIRES.

NOTE 2: EXPANSION ANCHORS HILTI KIWK BOLT T2 ICC ESR 1917 OR SIMPSON STRONG BOLT 2 ICC ESR 3037

E AT STEEL BEAM
NO PIN IS TO BE INSTALLED IN THE PROTECTED ZONE OF ANY STEEL MEMBER 25 / A-9.1

FOR SUSPENDED CEILING CONDITIONS & NOTES SEE ALSO 28 / A-10.1, 2 / A-10.1, 3 / A-10.1, 17 / A-10.1

SUSP ACOUS CLG-MTL DECK

3" = 1'-0" C303207 **3**

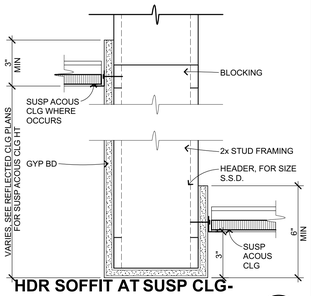

HDR SOFFIT AT SUSP CLG-MTL

3" = 1'-0" C303210_B **14**

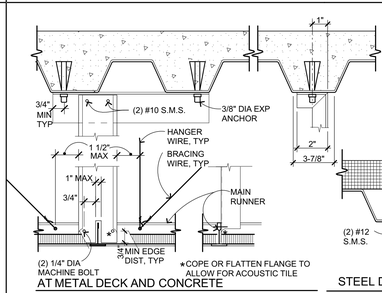

AT METAL DECK AND CONCRETE
DSA IR 25-2.13 FIGURE 5.21 OPTIONS 1 & 2

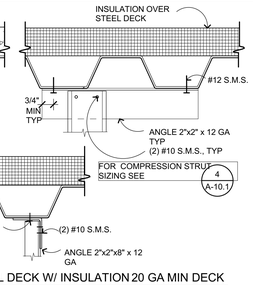

STEEL DECK W/ INSULATION 20 GA MIN DECK
DSA IR 25-2.13 FIGURE 5.20 OPTIONS 1 & 2

ALT MTL CHANNEL STRUT

3" = 1'-0" C303202B **4**

IDENTIFICATION STAMP
DIV. OF THE STATE ARCHITECT
APP: 01-119994 INC:
REVIEWED FOR
SS ☑ FLS ☑ ACS ☑
DATE: 08/16/2022

QUATTROCCHI KWOK ARCHITECTS
Main:
636 Fifth Street, Santa Rosa, CA 95404
East Bay:
55 Harrison Street, Suite 525,
Oakland, CA 94607
(707) 576-0829

LICENSED ARCHITECT
JIM THRISS
LICENSE # C22643
EXP. JUNE 30, 2023
STATE OF CALIFORNIA

SIGNED: JUNE 24, 2022

LIBERTY HIGH SCHOOL

NEW CLASSROOM BUILDINGS

850 2ND STREET
BRENTWOOD, CA
94513

LIBERTY UNION HIGH SCHOOL DISTRICT

DSA APP NO.	01-119994
ARCH PROJECT NO:	1925.00
DRAWN BY:	JDS & PAG
DRAWING SCALE:	AS NOTED
PTN: 61721-83	FILE NO: 7-H4

CONSTRUCTION DOCUMENTS

JUNE 24, 2022

SHEET TITLE

CEILING DETAILS CONC AND METAL

SHEET NUMBER

A-10.2

BIMcloud: archiserver - BIMcloud Basic for ARCHICAD 22/1925.00 Liberty HS Classroom, BLDG A, AC22-7/27/2022-5:32 PM

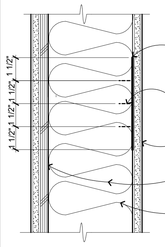

ALTERNATE WALL OR CEILING BLOCKING / BACKING FOR ATTACHING FIXTURES, EQUIPMENT, CABINETS, AS REQUIRED

MTL BACK'G PL AT WD 31

3" = 1'-0" C1080101_C

NOTES:
1. GRAB BARS SHALL NOT ROTATE
2. GRAB BARS, FLANGES & ANY EXPOSED SURFACE SHALL NOT HAVE ANY SHARP OR ABRASIVE ELEMENTS
3. CBC 11B-609.8 GRAB BARS & MOUNTINGS SHALL W/STAND 250 LBS IN ANY DIRECTION

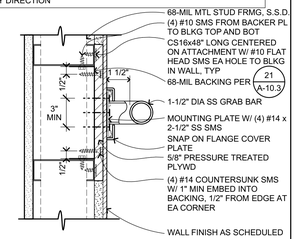

GRAB BAR ATTACH - MTL 26

3" = 1'-0" C103101_B 1925.00

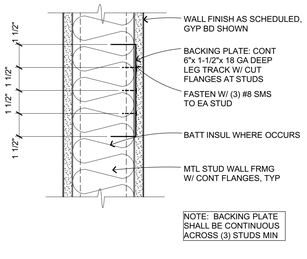

NOTE: BACKING PLATE SHALL BE CONTINUOUS ACROSS (3) STUDS MIN

BACKING PLATE AT MTL STUDS 21

3" = 1'-0" C108101_B

NOTES:
1. GRAB BARS SHALL NOT ROTATE.
2. GRAB BARS AND ANY SURFACE ADJACENT TO THEM CANNOT HAVE ANY SHARP OR ABRASIVE ELEMENTS.
3. CBC 11B-609.8 GRAB BAR MOUNTINGS SHALL WITHSTAND 250 LBS HORIZONTAL OR VERTICAL LOADING EACH, AND 500 LBS TOTAL PER GRAB BAR.

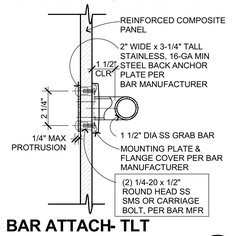

GRAB BAR ATTACH- TLT PARTITION 16

3" = 1'-0" C103101_C

NOTES:
1. GRAB BARS SHALL NOT ROTATE
2. GRAB BARS, FLANGES & ANY EXPOSED SURFACE SHALL NOT HAVE ANY SHARP OR ABRASIVE ELEMENTS
3. CBC 11B-609.8 GRAB BARS & MOUNTINGS SHALL W/STAND 250 LBS IN ANY DIRECTION

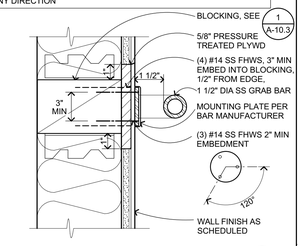

GRAB BAR ATTACH - WD 6

3" = 1'-0" C103102 1925.00

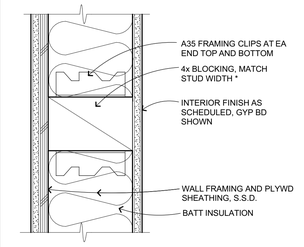

TYPICAL WALL OR CEILING BLOCKING / BACKING FOR ATTACHING FIXTURES, EQUIPMENT, CABINETS, REQUIRED

* WHERE STUD WIDTH > 5 1/2", 4 x 6 AT SIDE OF ATTACHMENT MAY BE USED.

BLKG/BACKING-WD 1

3" = 1'-0" C108101_A

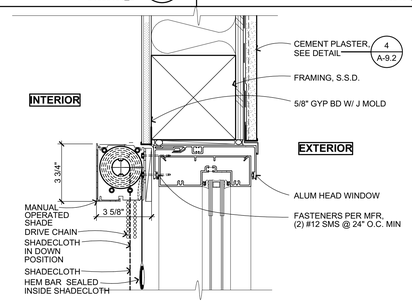

MANUAL WDW SHADE

3" = 1'-0" C104101 27

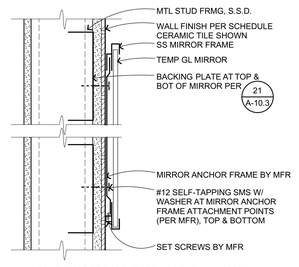

NOTE: SHIM AS REQ ABOVE CERAMIC TILE WAINSCOT

MIRROR ATTCHMENT MTL 22

3" = 1'-0" C103103_B

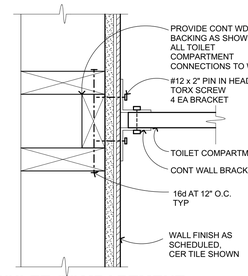

TOILET COMPARTMENT BACKING AT WOOD STUD 17

3" = 1'-0" C103104_A

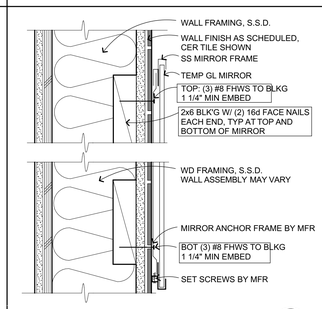

MIRROR ATTACHMENT WD 12

3" = 1'-0" C103103_A

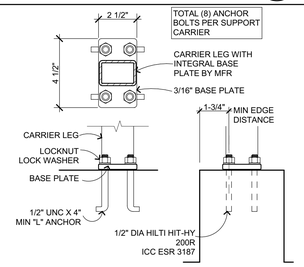

DF BASE ANCHOR 7

3" = 1'-0" D208109

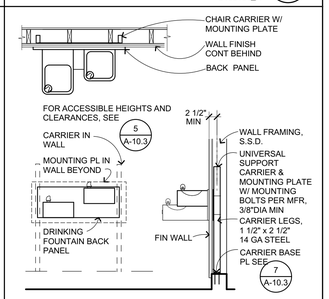

DF MOUNTING CARRIER WD 2

1/2" = 1'-0" D208108

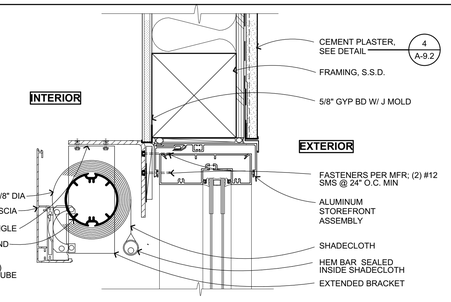

MOTORIZED WDW SHADE

3" = 1'-0" C104102 28

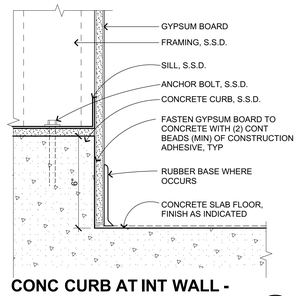

CONC CURB AT INT WALL - MTL 23

3" = 1'-0" C301102

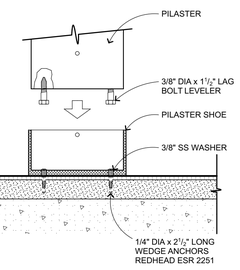

TOILET COMPARTMENT ATTACH AT FLOOR 18

3" = 1'-0" C1031015

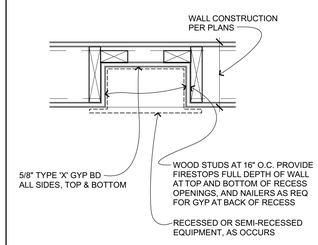

RECESS AT RATED WALL- WD FRMNG 13

1 1/2"= 1'-0" C104102

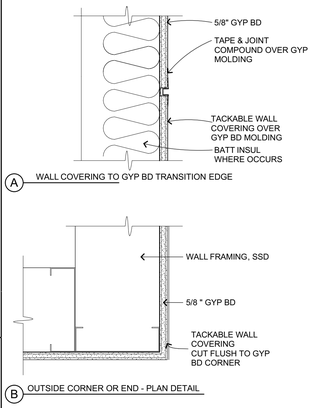

MANUFACTURED TACKABLE PANELS 9

3" = 1'-0" C301302

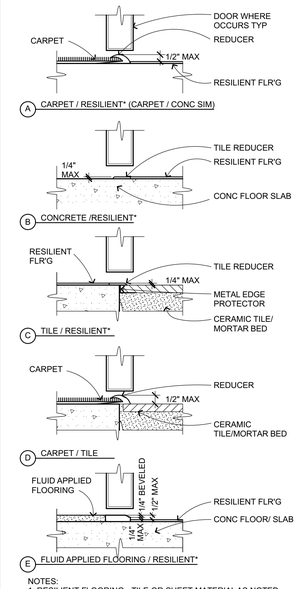

NOTES:
1. RESILIENT FLOORING - TILE OR SHEET MATERIAL AS NOTED OR SPECIFIED ELSEWHERE.
2. WHERE TRANSITION STRIP > 1/4" HT SHALL BE BEVELED 1:2 MAX OR EQUIVALENT THERETO.
3. DOOR AS OCCURS, TYP.

FLOOR TRANSITION/SILLS 4

3" = 1'-0" C102601

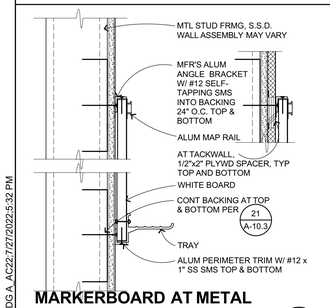

MARKERBOARD AT METAL STUDS 34

3" = 1'-0" C103201_B

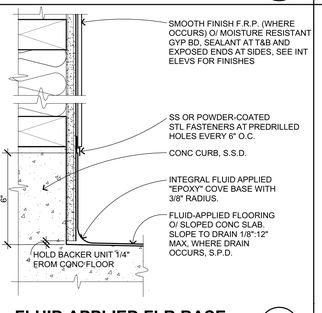

FLUID APPLIED FLR BASE 29

3" = 1'-0" C100500

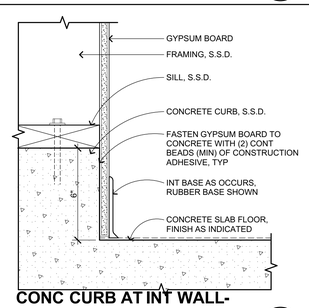

CONC CURB AT INT WALL- WD FRMG 24

3" = 1'-0" C301101

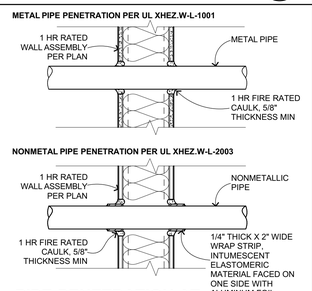

PIPE PENETRATION AT RATED WALL 19

1 1/2"= 1'-0" B100097

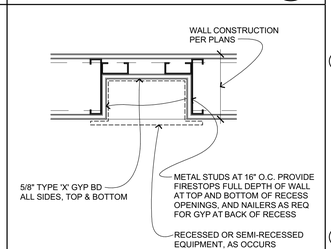

RECESS AT RATED WALL- MTL FRAMING 14

1 1/2"= 1'-0" B104101

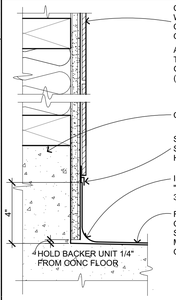

CERAMIC TILE 35

3" = 1'-0" C301201

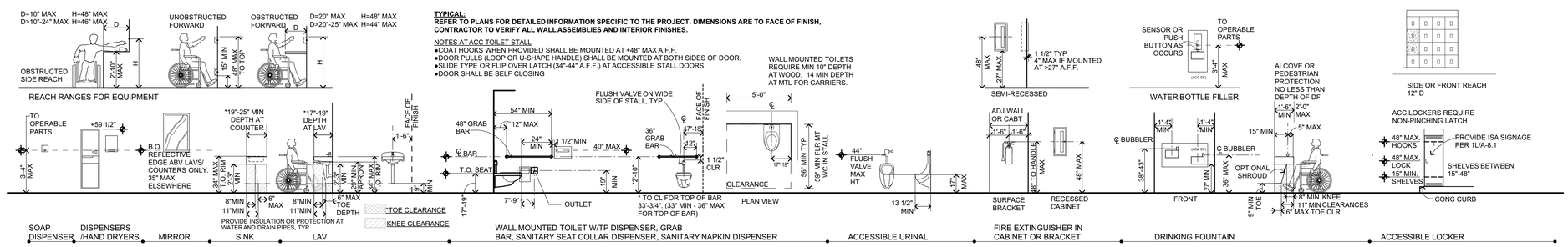

ACC MOUNTING HEIGHTS - ADULT 5

1/4" = 1'-0" C401101-2019

TYPICAL:
REFER TO PLANS FOR DETAILED INFORMATION SPECIFIC TO THE PROJECT. DIMENSIONS ARE TO FACE OF FINISH, CONTRACTOR TO VERIFY ALL WALL ASSEMBLIES AND INTERIOR FINISHES.

NOTES AT ACC TOILET STALL
- COAT HOOKS WHEN PROVIDED SHALL BE MOUNTED AT +48" MAX A.F.F.
- DOOR PULLS (LOOP OR U-SHAPE HANDLE) SHALL BE MOUNTED AT BOTH SIDES OF DOOR.
- SLIDE TYPE OR FLIP OVER LATCH (34"-44" A.F.F.) AT ACCESSIBLE STALL DOORS.
- DOOR SHALL BE SELF CLOSING

IDENTIFICATION STAMP
DIV. OF THE STATE ARCHITECT
APP: 01-119994 INC:
REVIEWED FOR
SS ☑ FLS ☑ ACS ☑
DATE: 08/16/2022

QUATTROCCHI KWOK ARCHITECTS
Main:
636 Fifth Street, Santa Rosa, CA 95404
East Bay:
55 Harrison Street, Suite 525, Oakland, CA 94607
(707) 576-0829

LICENSED ARCHITECT
JIM THEISS
LICENSE # C22643
EXP. JUNE 30, 2023
STATE OF CALIFORNIA
SIGNED: JUNE 24, 2022

LIBERTY HIGH SCHOOL

NEW CLASSROOM BUILDINGS

850 2ND STREET
BRENTWOOD, CA 94513

LIBERTY UNION HIGH SCHOOL DISTRICT

DSA APP NO. 01-119994

ARCH PROJECT NO:	1925.00
DRAWN BY:	JDS & PAG
DRAWING SCALE:	AS NOTED
PTN: 61721-83	FILE NO: 7-H4

CONSTRUCTION DOCUMENTS

JUNE 24, 2022

SHEET TITLE

INTERIOR DETAILS

SHEET NUMBER

A-10.3

BIMcloud: archiserver - BIMcloud Basic for ARCHICAD 22/1925.00 Liberty HS Classroom_BLDG A_AC22-7/27/2022-5:32 PM

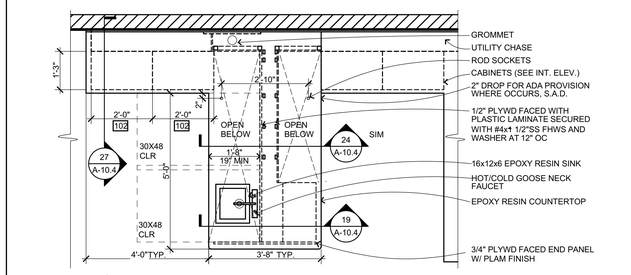

ACC LAB CASEWORK - PLAN

1/2" = 1'-0" E201111B **26**

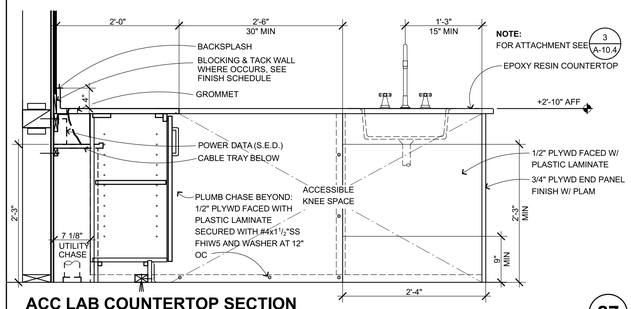

ACC LAB COUNTERTOP SECTION

1" = 1'-0" E201111A **27**

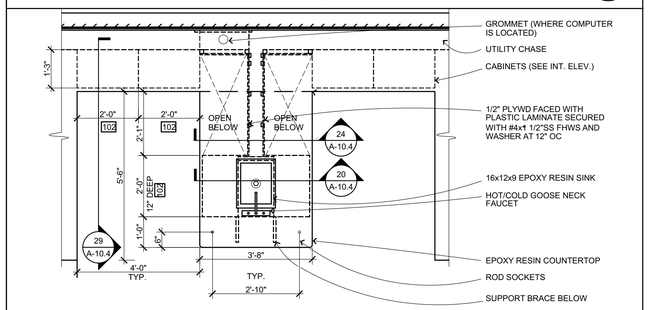

TYPICAL LAB CASEWORK - PLAN

1/2" = 1'-0" E201111B **28**

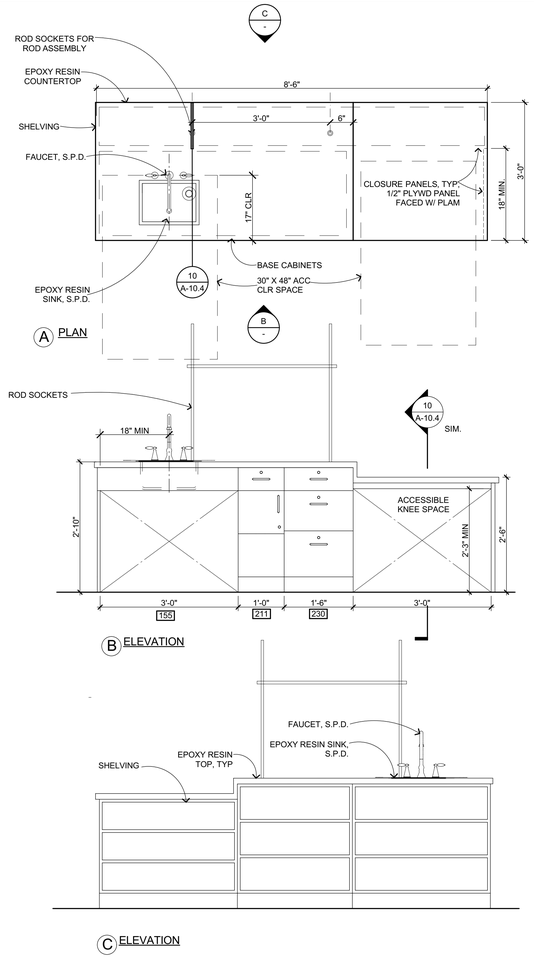

DEMONSTRATION TABLE

3/4" = 1'-0" E201109.1 **18**

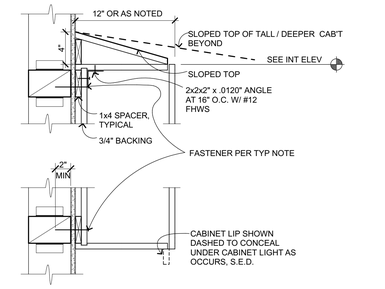

ATTACHMENT DETAILS SHOWN APPLY AT BOTH WOOD FRAMING AND METAL FRAMING. WOOD FRAMING IS SHOWN.

TYPICAL FASTENER :
2" MAX FROM ENDS. 3 MIN PER CABINET
WOOD: #12 F.H.W.S. AT 16" O.C. SET FLUSH.
ALTERNATE FASTENER 1/4" Ø SDS W/ 1-3/4" MIN EMBEDMENT INTO BLOCKING.
METAL: #12 MIN PAN HEAD SCREW W/ 1/2" MIN PENETRATION INTO MTL BACKING.

FOR BLOCKING AT WOOD FRAMING SEE 1 A-10.3

FOR BACKING AT METAL FRAMING SEE 21 A-10.3

CABINET NOTES:
PLASTIC LAMINATE CABINET U.O.N. ON INT ELEVATIONS OR OTHERWISE SCHEDULED.
DADO AND GLUE CABINET CARCASS. 3/4" BACKING, INTEGRAL TOE, TYPICAL

TYP CASEWORK ATTACHMENT

1 1/2"= 1'-0" E201100 **3**

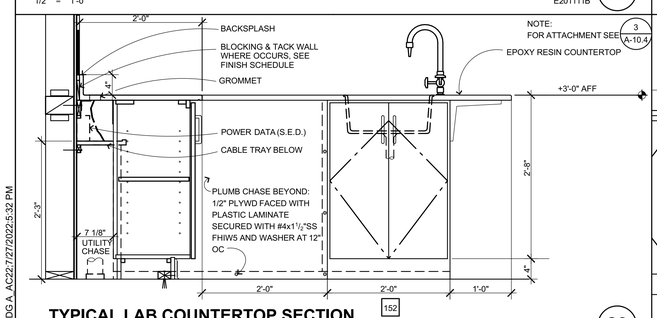

TYPICAL LAB COUNTERTOP SECTION

1" = 1'-0" E201111A **29**

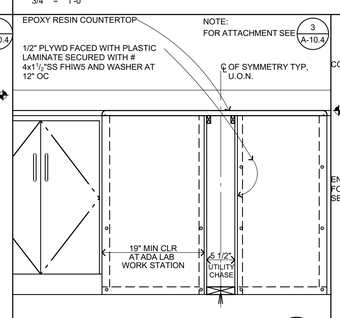

TYP LAB COUNTER SECTION

1" = 1'-0" E201111A **24**

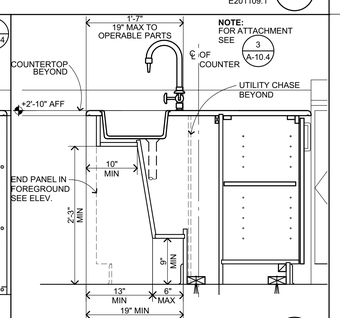

ACCESSIBLE LAB COUNTER

1" = 1'-0" E201111A **19**

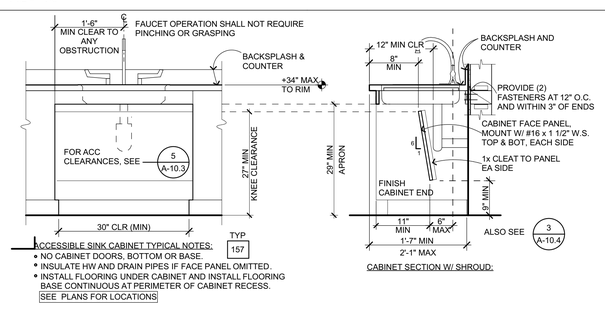

ACC SINK BASE CABINET

3/4" = 1'-0" E201108 **9**

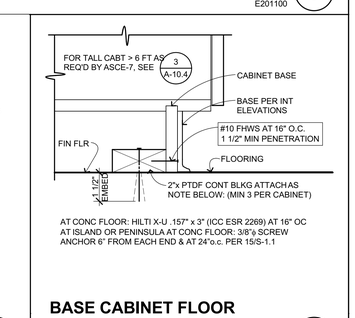

BASE CABINET FLOOR ATTACHMENT

3" = 1'-0" E201103 **4**

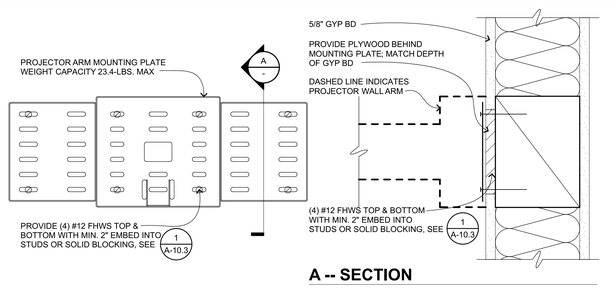

PROJECTOR ARM BRACKET

3" = 1'-0" 1501.00 **25**

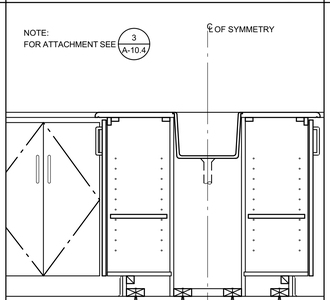

TYP LAB COUNTER SECTION

1" = 1'-0" E201111A **20**

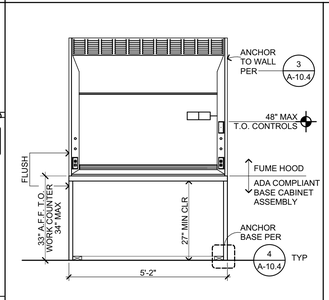

ACCESSIBLE FUME HOOD

1/2" = 1'-0" E201114 **15**

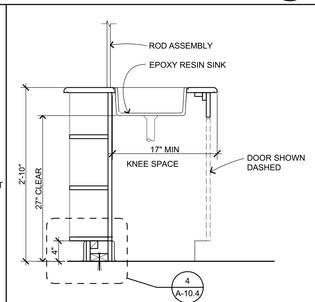

DEMONSTRATION TABLE SECTION

1" = 1'-0" E201110 **10**

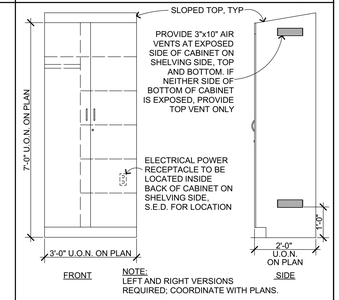

TEACHER CABINET W/ VENTILATION

1/2" = 1'-0" E201115 **5**

BIMcloud: archiserver - BIMcloud Basic for ARCHICAD 22/1925.00 Liberty HS Classroom_BLDG A. AC22-7/27/2022-5:32 PM

IDENTIFICATION STAMP
DIV. OF THE STATE ARCHITECT
APP: 01-119994 INC:
REVIEWED FOR
SS ☑ FLS ☑ ACS ☑
DATE: 08/16/2022

QUATTROCCHI KWOK ARCHITECTS
Main:
636 Fifth Street, Santa Rosa, CA 95404
East Bay:
55 Harrison Street, Suite 525,
Oakland, CA. 94607
(707) 576-0529

LICENSED ARCHITECT
JIM THEISS
LICENSE # C22643
EXP JUNE 30, 2023
STATE OF CALIFORNIA
SIGNED: JUNE 24, 2022

LIBERTY HIGH SCHOOL

NEW CLASSROOM BUILDINGS

850 2ND STREET
BRENTWOOD, CA
94513

LIBERTY UNION HIGH SCHOOL DISTRICT

DSA APP NO. 01-119994

ARCH PROJECT NO:	1925.00
DRAWN BY:	JDS & PAG
DRAWING SCALE:	AS NOTED
PTN: 61721-83	FILE NO: 7-H4

CONSTRUCTION DOCUMENTS
JUNE 24, 2022
SHEET TITLE

CASEWORK DETAILS

SHEET NUMBER
A-10.4

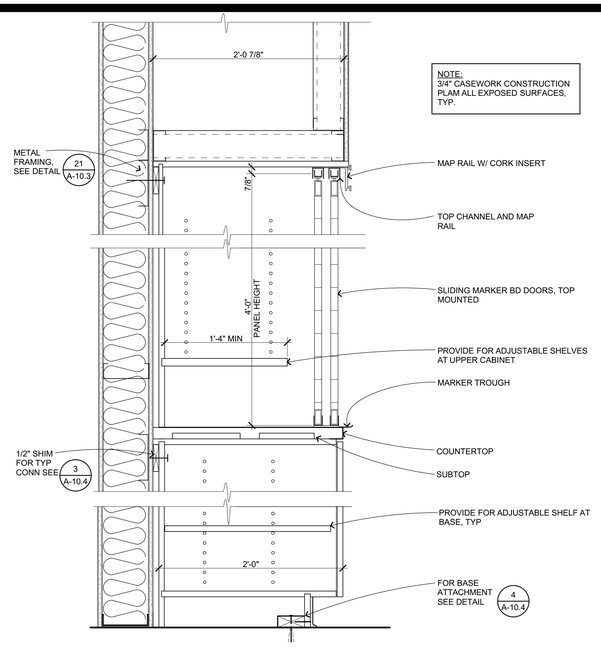

TEACHING WALL SECTION - BUILDING A

1 1/2"= 1'-0" E201212 **22**

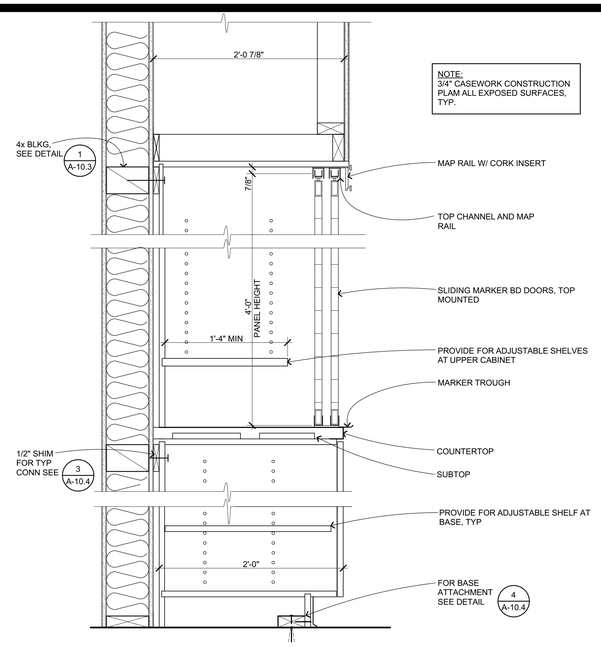

TEACHING WALL SECTION - BUILDING B

1 1/2"= 1'-0" E201212 **12**

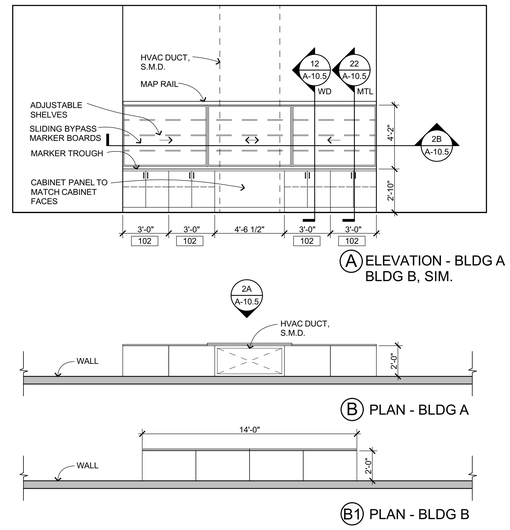

TEACHING WALL PLAN/ELEVATION

1/4" = 1'-0" **2**

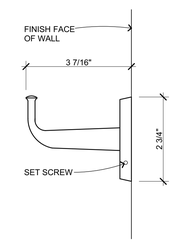

HEAVY DUTY COAT HOOK

6" = 1'-0" E201112 **8**

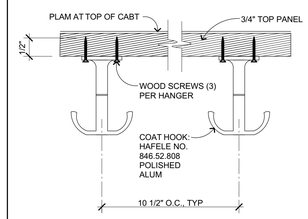

COAT HOOKS

6" = 1'-0" E201111 **3**

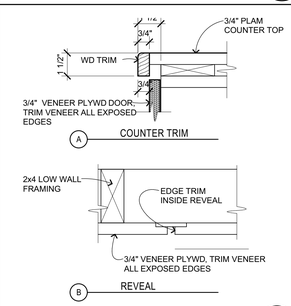

RECEPTION COUNTER TRIM

3" = 1'-0" E201202 **9**

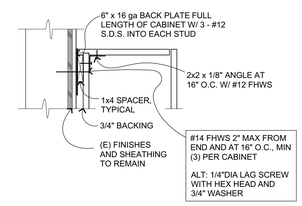

CABINET ALT DETAIL

1 1/2"= 1'-0" E201106.1 **4**

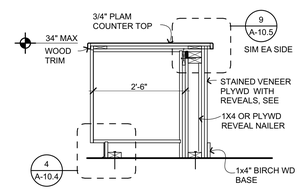

ACCESSIBLE COUNTER SECTION

3/4" = 1'-0" E2011206 **10**

IDENTIFICATION STAMP
DIV. OF THE STATE ARCHITECT
APP: 01-119994 INC:
REVIEWED FOR
SS ☑ FLS ☑ ACS ☑
DATE: 08/16/2022

QUATTROCCHI KWOK ARCHITECTS
Main:
636 Fifth Street, Santa Rosa, CA 95404
East Bay:
55 Harrison Street, Suite 525,
Oakland, CA 94607
(707) 576-0829

LICENSED ARCHITECT
JIM THEISS
LICENSE # C22643
EXP JUNE 30, 2023
STATE OF CALIFORNIA

SIGNED: JUNE 24, 2022

LIBERTY HIGH SCHOOL

NEW CLASSROOM BUILDINGS

850 2ND STREET
BRENTWOOD, CA
94513

LIBERTY UNION HIGH SCHOOL DISTRICT

DSA APP NO. 01-119994

ARCH PROJECT NO:	1925.00
DRAWN BY:	JDS & PAG
DRAWING SCALE:	AS NOTED
PTN: 61721-83	FILE NO: 7-H4

CONSTRUCTION DOCUMENTS

JUNE 24, 2022

SHEET TITLE

CASEWORK DETAILS

SHEET NUMBER

A-10.5

BIMcloud: archiserver - BIMcloud Basic for ARCHICAD 22/1925.00 Liberty HS Classroom_BLDG A_AC22.7/27/2022 5:32 PM

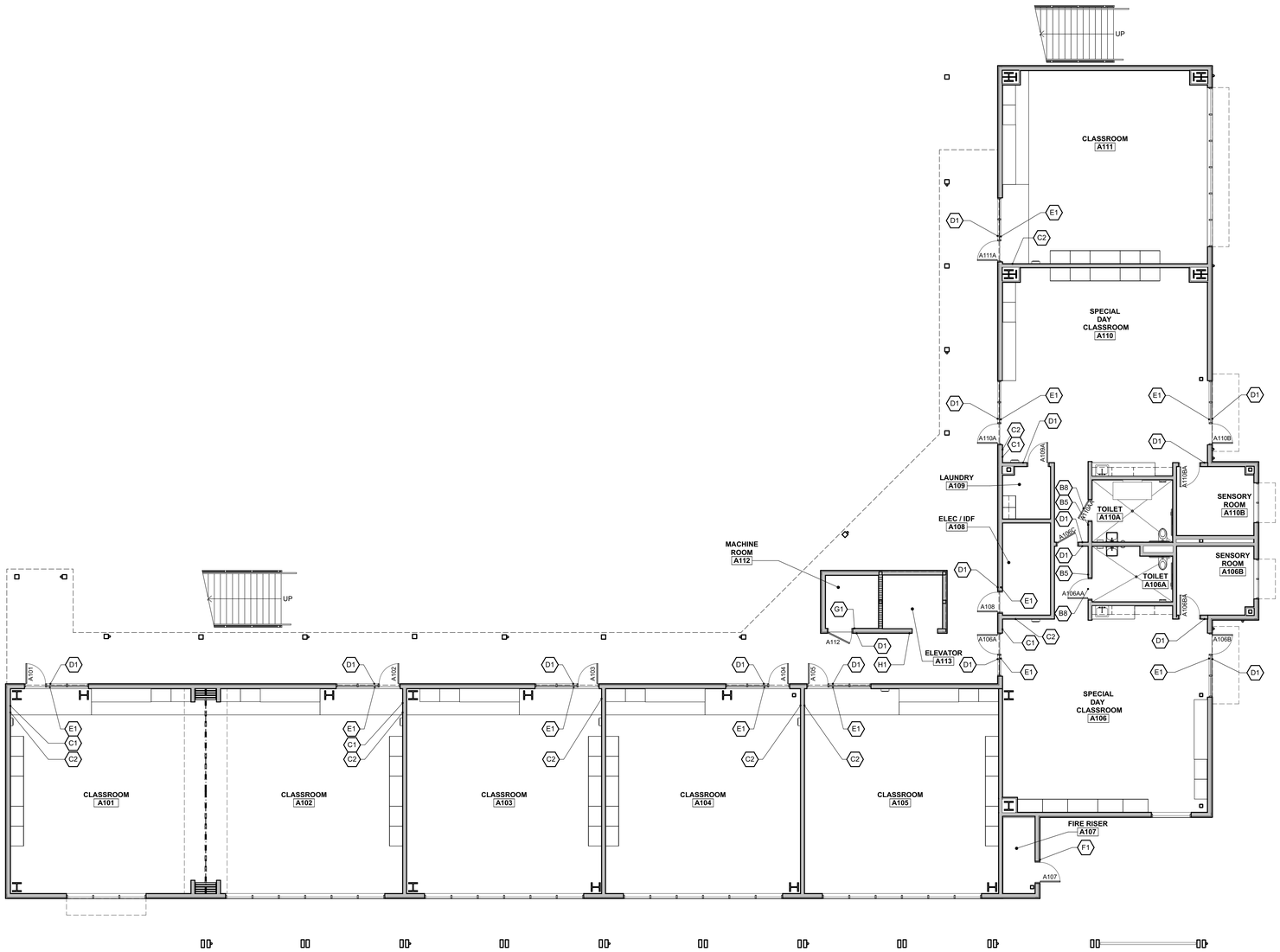

FIRST FLOOR GRAPHICS PLAN (1)

1/8" = 1'-0"

NORTH

SIGNAGE PLAN GENERAL NOTES

1. REFER TO SHEET A-8.1 FOR SIGNAGE DETAILS

KEY PLAN

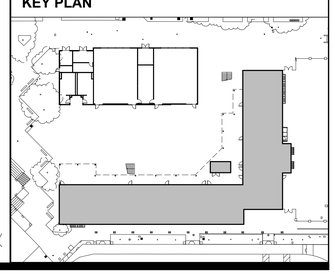

IDENTIFICATION STAMP
DIV. OF THE STATE ARCHITECT
APP: 01-119994 INC:
REVIEWED FOR
SS ☑ FLS ☑ ACS ☑
DATE: 08/16/2022

QUATTROCCHI KWOK
ARCHITECTS
Main:
636 Fifth Street, Santa Rosa, CA 95404
East Bay:
55 Harrison Street, Suite 525,
Oakland, CA 94607
(707) 576-0829

LICENSED ARCHITECT
JIM THEISS
LICENSE # C22643
EXP JUNE 30, 2023
STATE OF CALIFORNIA

SIGNED: JUNE 24, 2022

LIBERTY HIGH SCHOOL

NEW CLASSROOM BUILDINGS

850 2ND STREET
BRENTWOOD, CA
94513

LIBERTY UNION
HIGH SCHOOL
DISTRICT

DSA APP NO. 01-119994

ARCH PROJECT NO:	1925.00
DRAWN BY:	JDS
DRAWING SCALE:	1/8" = 1'-0"
PTN: 61721-83	FILE NO: 7-H4

CONSTRUCTION DOCUMENTS

JUNE 24, 2022

SHEET TITLE

BLDG A - FIRST FLOOR SIGNAGE PLAN

SHEET NUMBER

AG-A2.1

BIMcloud: archiserver - BIMcloud Basic for ARCHICAD 22/1925.00 Liberty HS Classroom, BLDG A, AC22.7/27/2022:5:33 PM

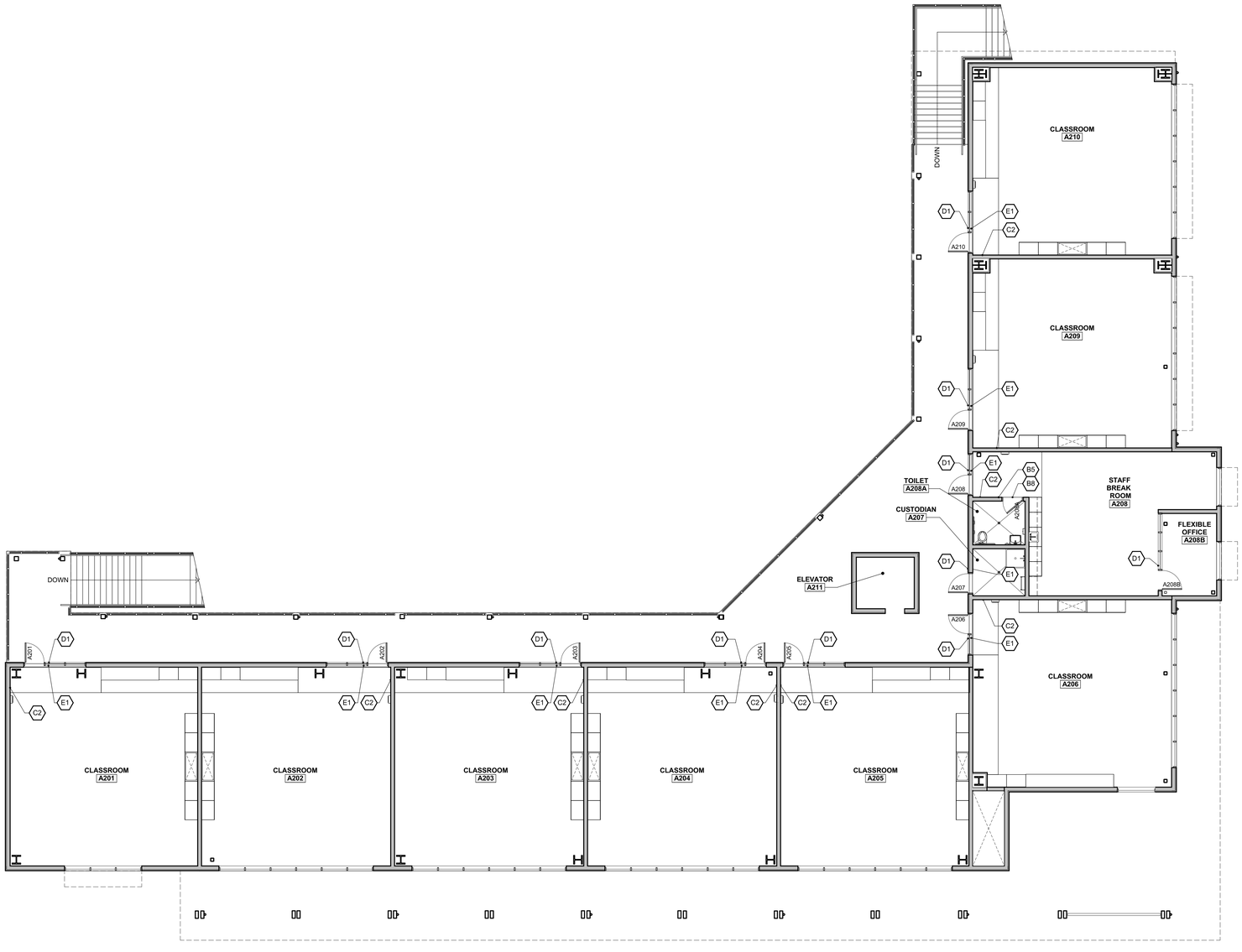

SECOND FLOOR GRAPHICS PLAN

1/8" = 1'-0"

1

NORTH

SIGNAGE PLAN GENERAL NOTES

1. REFER TO SHEET A-8.1 FOR SIGNAGE DETAILS

KEY PLAN

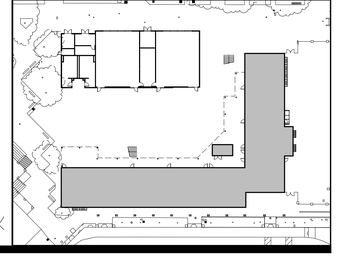

IDENTIFICATION STAMP
DIV. OF THE STATE ARCHITECT
APP: 01-119994 INC:
REVIEWED FOR
SS ☑ FLS ☑ ACS ☑
DATE: 08/16/2022

QUATTROCCHI KWOK
ARCHITECTS
Main:
636 Fifth Street, Santa Rosa, CA 95404
East Bay:
55 Harrison Street, Suite 525,
Oakland, CA 94607
(707) 576-0829

LICENSED ARCHITECT
JIM THEISS
LICENSE # C22643
EXP. JUNE 30, 2023
STATE OF CALIFORNIA

SIGNED: JUNE 24, 2022

LIBERTY HIGH SCHOOL

NEW CLASSROOM BUILDINGS

850 2ND STREET
BRENTWOOD, CA
94513

LIBERTY UNION
HIGH SCHOOL
DISTRICT

DSA APP NO. 01-119994

ARCH PROJECT NO:	1925.00
DRAWN BY:	JDS
DRAWING SCALE:	1/8" = 1'-0"
PTN: 61721-83	FILE NO: Y-H4

CONSTRUCTION DOCUMENTS

JUNE 24, 2022

SHEET TITLE

BLDG A - SECOND FLOOR SIGNAGE PLAN

SHEET NUMBER

AG-A2.2

BIMcloud: archiserver - BIMcloud Basic for ARCHICAD 22/1925.00 Liberty HS Classroom, BLDG A, AC22 7/27/2022 5:33 PM

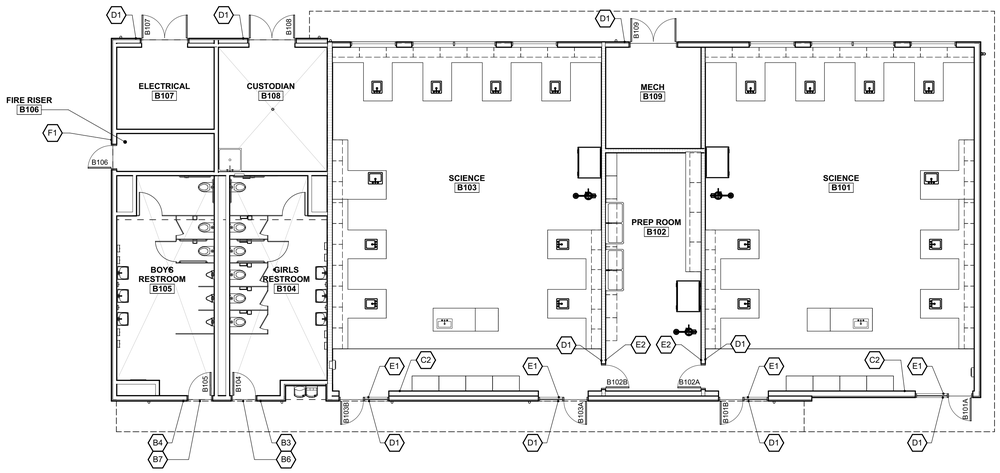

GRAPHICS PLAN 1

1/8" = 1'-0"

NORTH

SIGNAGE PLAN GENERAL NOTES

1. REFER TO SHEET A-8.1 FOR SIGNAGE DETAILS

KEY PLAN

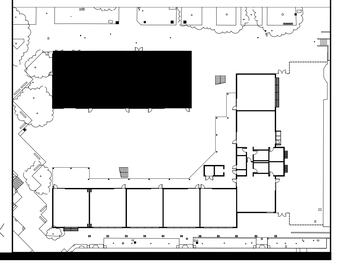

IDENTIFICATION STAMP
DIV. OF THE STATE ARCHITECT
APP: 01-119994 INC:
REVIEWED FOR
SS ☑ FLS ☑ ACS ☑
DATE: 08/16/2022

QUATTROCCHI KWOK ARCHITECTS
Main:
636 Fifth Street, Santa Rosa, CA 95404
East Bay:
55 Harrison Street, Suite 525,
Oakland, CA 94607
(707) 576-0829

LICENSED ARCHITECT
JIM THEISS
LICENSE # C22643
EXP JUNE 30, 2023
STATE OF CALIFORNIA

SIGNED: JUNE 24, 2022

LIBERTY HIGH SCHOOL

NEW CLASSROOM BUILDINGS

850 2ND STREET
BRENTWOOD, CA
94513

LIBERTY UNION
HIGH SCHOOL
DISTRICT

DSA APP NO. 01-119994

ARCH PROJECT NO:	1925.00
DRAWN BY:	JDS
DRAWING SCALE:	1/8" = 1'-0"
PTN. 61721-83	FILE NO: 7-H4

CONSTRUCTION DOCUMENTS

JUNE 24, 2022

SHEET TITLE

BLDG B - SIGNAGE PLAN

SHEET NUMBER

AG-B2.1

BIMcloud: archiserver - BIMcloud Basic for ARCHICAD 22/1925.00 Liberty HS Classroom_BLDG B_AC22:7/27/2022:5:00 PM

G MATERIAL DATA

(INFORMATION SHOWN IS FOR STRUCTURAL DESIGN REFERENCE ONLY. SEE THE PROJECT SPECIFICATIONS FOR ALL MATERIAL SPECIFICATIONS.)

CONCRETE 28-DAY MINIMUM DESIGN STRENGTH:
- CEMENT: PORTLAND CEMENT, ASTM C150, TYPE II
- F'_c = 3,000 PSI FOUNDATIONS
- F'_c = 3,000 PSI INTERIOR SLAB ON GRADE

REINFORCING STEEL:
- ASTM A615 GRADE 60 OR A706 GRADE 60 (F_y = 60,000 PSI)

STRUCTURAL STEEL (UNO):
- W SHAPES - ASTM A992 (Fy = 50,000 PSI)
- ANGLES, CHANNELS, AND PLATES - ASTM A36 (Fy = 36,000 PSI)
- RECTANGULAR HSS - ASTM A500 GRADE C (Fy = 50,000 PSI)
- ROUND HSS - ASTM A500 GRADE C (Fy = 46,000 PSI)
- PIPES - ASTM A53 GRADE B (Fy = 35,000 PSI)

FASTENERS:
- MACHINE BOLTS SHALL BE ASTM A307 GRADE A
- HIGH STRENGTH BOLTS SHALL BE ASTM F3125 GRADE A325 OR F1852 UNO
- ANCHOR RODS SHALL BE ASTM F1554 GR 36 UNO
- ARC-WELDING ELECTRODES SHALL BE E70

COLD FORMED METAL FRAMING YIELD STRENGTH:
- F_y = 33,000 PSI 33 & 43 MILS (20 & 18 GAUGE)
- F_y = 50,000 PSI 54, 68, & 97 MILS (16, 14, & 12 GAUGE)

WOOD BASE DESIGN STRESSES (UNO):

SAWN LUMBER MEMBER	SPECIES AND MINIMUM GRADE, UNO	F_b (PSI)	F_v (PSI)	E (PSI)
6x POSTS	DOUGLAS FIR - #1	1200	170	$1.6x10^6$
6x BEAMS	DOUGLAS FIR - #1	1350	170	$1.6x10^6$
4x POSTS & BEAMS	DOUGLAS FIR - #1	1000	180	$1.7x10^6$
2x JOISTS, RAFTERS	DOUGLAS FIR - #1	1000	180	$1.7x10^6$
℘ MATERIAL	DOUGLAS FIR - #1	1000	180	$1.7x10^6$
2x STUDS	DOUGLAS FIR - #1	1000	180	$1.7x10^6$

GLUE-LAMINATED WOOD DESIGN STRESSES:
- F_b = 2,400 PSI, F_v = 265 PSI, E =$1.8x10^6$ psi
- 24F-V4 FOR SIMPLE SPAN BEAMS, 24F-V8 FOR CANTILEVERED BEAMS

MANUFACTURED WOOD PRODUCTS:
- LVL (JOISTS, STUDS, POSTS) F_b = 2,600 PSI Fv = 285 psi E = $2.0x10^6$ PSI
- REDBUILT REDLAM LAMINATED VENEER LUMBER - ICC ESR 2993.

FOR METAL CONNECTOR DESIGNATION REFER TO SIMPSON STRONG-TIE PER SPECIFICATIONS.

H COLD-FORMED STEEL FRAMING NOTES

1. SEE PLANS, DETAILS, AND ARCHITECTURAL DRAWINGS FOR METAL FRAMING LOCATIONS. SEE ARCHITECTURAL DRAWINGS FOR WALL WIDTHS AND CONFIGURATIONS.
2. EACH FRAMING MEMBER IS DESIGNATED BY A FOUR PART CODE INDICATING THE SIZE (BOTH DEPTH AND FLANGE WIDTH), STYLE, AND MATERIAL THICKNESS. FOR EXAMPLE, 600S162-54:

   600 - MEMBER DEPTH IN 1/100" (6")
   S - MEMBER STYLE - S=STUD, T=TRACK
   162 - FLANGE WIDTH IN 1/100" (1⅝")
   54 - MATERIAL THICKNESS IN MILS (0.054")

3. TYPICAL METAL STUDS AND FRAMING ARE PER SCHEDULE 1/S-1.6 UNO. MANUFACTURER'S INFORMATION SHOWING CONFORMANCE TO CRITERIA SHOWN ON DRAWINGS AND SPECIFICATIONS. MINIMUM METAL THICKNESS = 33MILS (20GA).
4. TYPICAL TRACKS ARE SAME GAUGE (MILS) AS STUD, 43 MILS MINIMUM UNO. FLANGE TO BE 1½" MIN.
5. ALL STUDS TO BE CONTINUOUS. ALL TRACKS IN HEADERS AND SILLS TO BE CONTINUOUS SINGLE-PIECE BETWEEN JAMB STUDS OR PARAPET POSTS.
6. FASTENING OF COMPONENTS SHALL BE WITH SELF-DRILLING SCREWS OR WELDING. SCREWS OR WELDS NOT SHOWN SHALL BE OF SUFFICIENT SIZE TO ENSURE THE STRENGTH OF THE CONNECTION. ALL WELDS OF GALVANIZED STEEL SHALL BE TOUCHED-UP WITH A ZINC-RICH PAINT. WIRE TYING OF COMPONENTS SHALL NOT BE PERMITTED.
7. EXPANSION ANCHOR OR SCREW ANCHOR SIZE AND EMBEDMENT ARE AS REQUIRED PER DRAWINGS. MINIMUM STEEL EDGE DISTANCE IN TRACK IS 2x ANCHOR DIAMETER AND MINIMUM SPACING IS 3x ANCHOR DIAMETER UNO. SEE EXPANSION OR SCREW ANCHOR SCHEDULE FOR CONCRETE REQUIREMENTS. FOR EXPANSION ANCHOR THROUGH METAL TRACK, USE 3" SQUARE x ¼" PLATE WASHER (OR EQUIVALENT ROUND WASHER) AT TRACK. DRILL HOLE IN PLATE WASHER FOR EXPANSION ANCHOR AS NEEDED TO ACHIEVE MINIMUM EDGE DISTANCES.
8. METAL STUDS TO BE LATERALLY BRACED WITH GYPSUM BOARD BOTH SIDES PER CBC OR BRACED AT 4'-0"oc MAXIMUM PER 1/S-1.7 .
9. TYPICAL STUD-TO-TRACK CONNECTIONS PER 6/S-1.6 UNO. MAXIMUM GAP OF ⅛" IS ALLOWED BETWEEN STUDS AND TRACK AT STANDARD WALLS. TRIM STUDS TO FULLY BEAR.
10. TYPICAL WALL INTERSECTIONS PER 3/S-1.7 UNO.
11. PROVIDE LIGHT GAUGE METAL BACKING FOR ARCHITECTURAL FINISHES AND FURNISHINGS, SAD.
12. CEILING FRAMING PER 4/S-1.7 .
13. TYPICAL PUNCHOUTS PER 7/S-1.7 .
14. WALLS AT SEISMIC SEPARATION JOINTS SHALL BE FRAMED AS EXTERIOR WALLS UNO.
15. FOR POWER ACTUATED FASTENERS (PAF) UNO:

BASE MATERIAL	FASTENER TYPE	SIZE	MINIMUM SPACING	MINIMUM DISTANCE	NOTES
CONCRETE	HILTI X-U (ICC ESR-2269)	0.157"Ø MIN 1¼" LONG	4"	3"	DO NOT USE PAF AT CONCRETE CURB
STRUCTURAL STEEL	HILTI X-U (ICC ESR-2269)	0.157"Øx⅝" LONG	1"	½"	

E SHEAR WALL NOTES

1. PEN = PLYWOOD/OSB SHEATHING EDGE NAILING. BLOCK ALL UNSUPPORTED EDGES WITH 2x MATERIAL UNO. BLOCK EDGES WITH 3x MATERIAL WHERE NAILING IS 4"oc OR LESS. SEE 11/S-1.2 FOR NAIL STAGGER AT ALL 3x.
2. FIELD NAILING TO BE 12"oc UNO.
3. ALL SHEATHING NAILS TO BE COMMON WIRE. SEE D/S-0.1 AND SPECIFICATIONS FOR OTHER NAIL REQUIREMENTS.
4. ALL EXTERIOR WALLS NOT DESIGNATED AS SHEAR WALLS ON PLANS TO HAVE SHEATHING AND PEN NAILING PER SHEAR WALL TYPE 'A'.
5. SHEAR WALL LENGTHS, WHERE NOTED, ARE MINIMUM. DO NOT LOCATE HOLDOWNS FROM THESE DIMENSIONS. SAD FOR ACTUAL WALL LENGTHS.
6. HOLDOWN REFERS TO SIMPSON STRONG TIE CO. HOLDOWNS. INSTALL HOLDOWNS AND REQUIRED POSTS PER 8/S-1.2 AND 9/S-1.2 SEE PLANS FOR OTHER REQUIREMENTS.
7. EDGE NAIL WALL SHEATHING TO STUDS OR POSTS WITH HOLDOWNS.
8. PORTIONS OF INTERIOR WALL SURFACES ADJACENT TO SPECIFIED SHEAR WALLS SHALL BE SHEATHED FOR THE FULL, UNINTERRUPTED LENGTH TO MATCH EXTERIOR WALLS OR WITH GYPSUM BOARD OF THE SAME THICKNESS TO PROVIDE AN EVEN WALL SURFACE FOR FINISH MATERIALS.
9. SHEAR WALLS MORE THAN ONE VERTICAL PANEL IN HEIGHT SHALL HAVE STAGGERED HORIZONTAL OR VERTICAL SPLICE JOINTS.
10. WHERE PANELS ARE APPLIED ON BOTH FACES OF A WALL AND NAIL SPACING IS LESS THAN 6"oc ON EITHER SIDE, PANEL JOINTS SHALL BE OFFSET TO FALL ON DIFFERENT FRAMING MEMBERS OR FRAMING SHALL BE 3x OR THICKER AND NAILS ON EACH SIDE SHALL BE STAGGERED. AT LVL STUDS, PROVIDE 2.5" MIN LVL STUD IN LEIU OF 3x
11. ANCHOR BOLTS (AB) FOR SHEAR WALLS SHALL INCLUDE STEEL PLATE WASHERS, A MINIMUM OF 0.229 INCH BY 3 INCHES SQUARE IN SIZE, BETWEEN THE SILL PLATE AND NUT. THE HOLE IN THE PLATE WASHER IS PERMITTED TO BE DIAGONALLY SLOTTED WITH A WIDTH OF UP TO 3/16" LARGER THAN THE AB DIAMETER AND A SLOT LENGTH NOT TO EXCEED 1¾", PROVIDED A STANDARD CUT WASHER IS PLACED BETWEEN THE PLATE WASHER AND THE NUT. PLATE WASHER TO EXTEND WITHIN ½" OF SHEAR WALL SHEATHING UNO. PROVIDE OVERSIZED PLATE WASHER OR OFFSET AB AS REQUIRED. AB TO BE PLACED A MINIMUM OF 4½" AND A MAXIMUM OF 12" FROM ENDS OF ALL SILL PLATES AND AT NOTCHES IN SILL PLATES. SEE 7/S-1.2
12. NO OPENINGS ARE ALLOWED IN SHEAR WALLS UNLESS SHOWN ON THE STRUCTURAL PLANS. OPENINGS NOTED ARE PER 6/S-1.2 COORDINATE ANY OPENINGS NOT SHOWN WITH THE STRUCTURAL ENGINEER.

SHEAR WALL SCHEDULE

SW	APA RATED SHEATHING	NAILING (PEN)	ANCHORAGE ⅝"Ø BOLT FDN		REMARKS
			2x SILL	3x SILL	
A	15/32" (32/16) EXP 1	10d @ 6"oc	32"oc	48"oc	
B	15/32" (32/16) EXP 1	10d @ 4"oc	24"oc	32"oc	3x MIN AT ALL ADJOINING PANEL EDGES
C	15/32" (32/16) EXP 1	10d @ 3"oc	16"oc	24"oc	

AT LVL FRAMED WALLS, PROVIDE 2.5" MIN LVL STUD IN LEIU OF 3x STUD

F STEEL NOTES

1. COORDINATE TOP OF FOOTING ELEVATIONS AS INDICATED PER STRUCTURAL DRAWINGS.
2. TOP OF STEEL ELEVATIONS ARE PER ARCHITECTURAL DRAWINGS.
3. WHERE INDICATED ON PLAN "C" INDICATES MIDSPAN CAMBER IN INCHES.
4. ALL FRAMING AND CONNECTIONS ALONG GRID LINES OR OTHERWISE INDICATED AS (SFRS) ARE PART OF THE SEISMIC FORCE RESISTING SYSTEM. TESTING AND INSPECTION OF FRAMING AND CONNECTIONS INDICATED AS SFRS SHALL MEET ALL REQUIREMENTS OF AISC 341 AND AWS D1.8. SEE SPECIFICATIONS FOR ADDITIONAL REQUIREMENTS.
5. ALL BOLTS THAT ARE A PART OF THE SFRS ARE TO BE SLIP CRITICAL WITH CLASS A FAYING SURFACE PREPARATION, UNO.
6. DEMAND CRITICAL WELDS ARE AS INDICATED ON PLANS, ADDITIONALLY ALL COLUMN SPLICES AND COLUMN TO BASE PLATE WELDS IN THE SFRS ARE DEMAND CRITICAL. DEMAND CRITICAL WELDS AND THE TESTING AND INSPECTION OF THEM ARE TO MEET ALL REQUIREMENTS OF AISC 341, AWS D1.1, AND AWS D1.8. SEE SPECIFICATIONS FOR ADDITIONAL REQUIREMENTS.
7. SFRS MEMBERS (INCLUDING COLUMNS) WITH FLANGE THICKNESS EQUAL TO OR GREATER THAN 1½" SHALL HAVE A MINIMUM CHARPY V-NOTCH (CVN) TOUGHNESS OF 20 FT-LB AT + 70°F. THE TEST SHALL BE IN ACCORDANCE WITH ASTM A6 SUPPLEMENTARY REQUIREMENTS S30. SFRS BRACED FRAME GUSSET PLATES AND MOMENT FRAME CONTINUITY AND CAP PLATES WITH THICKNESS EQUAL TO OR GREATER THAN 2" SHALL HAVE A MINIMUM CHARPY V-NOTCH (CVN) TOUGHNESS OF 20 GT-LB +70°F. THE TEST SHALL BE IN ACCORDANCE WITH ASTM A673 FREQUENCY P.
8. CONCRETE OVER METAL DECK TO BE PLACED PRIOR TO INSTALLATION OF NON-BEARING WALLS BELOW. SPECIFIED NON-BEARING DEFLECTION GAPS IN TRACKS OR TOP PLATES SHALL BE MAINTAINED AFTER PLACEMENT OF CONCRETE.
9. MOMENT FRAME BEAM TO COLUMN CONNECTIONS ARE PREQUALIFIED SPECIAL WELDED UNREINFORCED FLANGE WELDED WEB (WUFW) CONNECTIONS. WORK, INSPECTIONS, AND TESTING IS TO MEET ALL REQUIREMENTS OF AISC 358 CHAPTERS 3, AND 8, AISC 341, AND AWS D1.8. SEE SPECIFICATIONS FOR ADDITIONAL REQUIREMENTS.

C FOUNDATION NOTES

1. ALLOWABLE (ASD) FOUNDATION DESIGN PRESSURES ARE:

   SHALLOW FOOTINGS:
   DEAD LOAD + LIVE LOAD = 2,500 PSF
   DEAD LOAD + LIVE LOAD + LATERAL = 3,300 PSF

2. ALL SOILS WORK SHALL BE DONE IN ACCORDANCE WITH THE SPECIFICATIONS AND THE REQUIREMENTS OF THE GEOTECHNICAL REPORT NOTED BELOW, AND CHAPTER 18A OF THE CBC. ALL FOUNDATIONS SHALL BEAR ON FIRM, UNDISTURBED, NATIVE SOILS OR ENGINEERED FILL AT OR EXCEEDING DEPTHS SHOWN ON THE DRAWINGS. ENGINEERED FILL TO BE COMPACTED PER GEOTECHNICAL REPORT. INCREASE FILL AND OR FOOTING DEPTH AS REQUIRED BY GEOTECHNICAL ENGINEER. ALL FOOTING EXCAVATIONS SHALL BE AS NEAT AS PRACTICABLE. MAXIMUM OVER EXCAVATION IN WIDTH SHALL BE LESS THAN 12 INCHES OR 25% OF FOOTING WIDTH, WHICH EVER IS LESS. 6 INCHES MAXIMUM PER SIDE. LARGER OVER-EXCAVATIONS IN WIDTH SHALL BE FILLED WITH ADDITIONAL REINFORCED CONCRETE AS DIRECTED BY THE ENGINEER, OR FORMWORK SHALL BE PROVIDED. OVER-EXCAVATIONS IN DEPTH MAY BE FILLED WITH LEAN CONCRETE OR COMPACTED APPROVED BACKFILL. ALL LOOSE SOILS SHALL BE REMOVED FROM EXCAVATIONS PRIOR TO PLACEMENT OF REINFORCING OR CONCRETE. GEOTECHNICAL REPORT BY:

   BSK ASSOCIATES
   REPORT NO. G21-225-11L
   DATED: 09-17-2021

3. WHERE BOTTOM OF ADJACENT FOOTINGS ARE DIFFERENT PROVIDE STEPPED FOOTING PER 5/S-1.1
4. FOR WOOD STUD WALLS, USE 5/8" DIAMETER x 12" (18" AT CURBS) ANCHOR BOLTS (AB) AT 48"oc WHERE NOT OTHERWISE NOTED. MINIMUM EMBEDMENT INTO CONCRETE IS 7" (EXCLUDING CURB) UNLESS DETAILED OTHERWISE. ANCHOR BOLTS ARE TO BE TIED IN PLACE PRIOR TO PLACEMENT OF CONCRETE. SEE SHEAR WALL SCHEDULE FOR ADDITIONAL REQUIREMENTS. MINIMUM TWO ANCHOR BOLTS PER SILL PIECE.
5. TYPICAL SLAB: 5" CONCRETE REINFORCED WITH #4 @ 16"oc EACH WAY 1 1/2" CLEAR FROM TOP OF SLAB OVER VAPOR RETARDER (PER SPECIFICATIONS) AND 6" MINIMUM FREE DRAINING COMPACTED CRUSHED ROCK ON SUBGRADE PER THE GEOTECHNICAL RECOMMENDATIONS, AND AS APPROVED BY THE GEOTECHNICAL ENGINEER. DO NOT DRIVE CONCRETE TRUCKS OR LARGE SCREED MACHINES ON VAPOR RETARDER WITHOUT ADDITIONAL BUFFER MATERIAL AND APPROVAL FROM THE STRUCTURAL ENGINEER.
6. REFER TO ARCHITECTURAL AND PLUMBING DRAWINGS FOR DEPRESSED SLABS FOR ARCHITECTURAL FLOORING OR INSERTS, SLOPED SLABS TO DRAIN AND PIPES OR CONDUITS AT SLAB. SEE 8/S-1.1 AT DEPRESSED SLAB & 7/S-1.1 FOR PIPES AND CONDUITS.
7. PROVIDE CONTROL JOINTS PER 6/S-1.1 (OR CONSTRUCTION/DOWEL JOINTS AT CONTRACTOR'S OPTION) AS SHOWN ON PLAN AND AS REQUIRED TO MEET A MAXIMUM SPACING IN FEET OF 3 TIMES THE SLAB DEPTH IN INCHES (FOR EXAMPLE 3x4" = 12'-0"oc MAX) AND 15'-0"oc MAX. INSTALL JOINTS TO DIVIDE SLAB INTO RECTANGULAR AREAS WITH LONG DIMENSION LESS THAN 1.5 x SHORT DIMENSION. INSTALL JOINTS AT FACE OF STUDS OF WALL WHERE POSSIBLE. SUBMIT JOINT LAYOUT PLAN FOR REVIEW PRIOR TO PLACEMENT.
8. DO NOT UNDERCUT EXISTING FOUNDATIONS. NOTIFY ENGINEER FOR REVIEW AND POSSIBLE REVISIONS, IF EXISTING FOUNDATION CONDITIONS ARE NOT AS SHOWN.
9. TOP OF FOOTING ELEVATIONS TO BE DETERMINED BY THE CONTRACTOR BASED ON INFORMATION FROM THE CIVIL DRAWINGS, GEOTECHNICAL REPORT, LANDSCAPE, ETC.

D WOOD FRAMING NOTES

1. HEADERS, BEAMS, POSTS, TOP PLATE SPLICES, AND ETC., ARE PER 1/S-1.2 AND 3/S-1.2 WHERE NOT NOTED ON PLAN AND DETAILS. WALLS AT SEISMIC SEPARATIONS SHALL BE CONSIDERED EXTERIOR WALLS.
2. ALL BEAMS AND JOISTS (EXCLUDING I JOISTS) SHALL BE SEAT CUT FOR FULL UNIFORM BEARING AT SUPPORTS, INCLUDING BEAM SEATS AND COLUMN CAPS.
3. ALL GLULAM BEAMS SHALL BE APPEARANCE GRADE UNLESS ENTIRELY CONCEALED BY FINISHES PER THE ARCHITECTURAL DRAWINGS.
4. THE GENERAL CONTRACTOR SHALL MEASURE GLULAM BEAM SIZES AND CAMBERS AS DELIVERED TO THE JOB SITE AND SHALL REPORT FINDINGS TO THE ENGINEER PRIOR TO ERECTION. PROVIDE 5,000 FT. RADIUS CAMBER ON ALL SIMPLE SPAN GLULAM BEAMS UNO. WHERE INDICATED ON PLAN, C = ¾" INDICATES MIDSPAN CAMBER IN INCHES.
5. 3½" AND 5½" WIDTHS MAY BE SUBSTITUTED FOR 3⅛" & 5⅛" WIDTHS, RESPECTIVELY, AT INDUSTRIAL APPEARANCE GRADE GLULAM MEMBERS UNO.
6. SEE 11/S-1.2 FOR SHEATHING NAILING REQUIREMENTS. ALL NAILING NOT NOTED OR DETAILED OTHERWISE SHALL BE PER 10/S-1.2 NAIL LENGTH TO BE SUFFICIENT TO MEET CBC PENETRATION REQUIREMENTS. NAILS INTO PRESSURE TREATED MATERIAL SHALL BE HOT DIP GALVANIZED. NAILS AT BORATE TREATED LUMBER MAY BE CLEAR ZINC COATED. SEE SPECIFICATIONS FOR ADDITIONAL REQUIREMENTS AT EXTERIOR EXPOSURES.
7. EXTERIOR STUD WALL SHALL BE 2x6 @ 16"oc UNLESS NOTED OTHERWISE. SEE STUD PLAN ON S-B2.1. INTERIOR BEARING WALLS AND SHEAR WALLS SHALL BE 2x6 @ 16"oc UNLESS NOTED OTHERWISE. SEE ARCHITECTURAL DRAWINGS FOR OTHER INTERIOR WALL FRAMING SIZES. COORDINATE STUD AND PLATE SIZES WITH THE REQUIREMENTS OF THE SHEAR WALL SCHEDULE.
8. WOOD POST SIZES ARE TO MATCH BEAM AND STUD WIDTH, UNO. WHERE POST OCCURS ABOVE RAISED FLOOR, PROVIDE SOLID BLOCKING AT FLOOR FRAMING TO MATCH WIDTH OF POST. PEN PER E/S-0.1 TO POSTS AT ALL EXTERIOR WALLS AND INTERIOR SHEAR WALLS. POSTS AT HOLDOWNS TO BE FULL HEIGHT AND PER 8/S-1.2
9. ALL MECHANICAL SUPPLY AND RETURN OPENINGS TO BE BETWEEN FRAMING UNO.
10. HSS OR PIPE COLUMNS IN STUD WALLS ARE TO BE TRIMMED PER 6/S-1.3 REFER TO PLANS AND DETAILS FOR OTHER REQUIREMENTS.
11. JOISTS AND RAFTERS ARE PER PLAN. UNLESS NOTED OTHERWISE, "HU" HANGER. HANGER SIZE TO BE CORRECT FULL SIZE FOR JOIST SIZE (I.E. LU210 FOR 2x10). FILL ALL NAIL HOLES.
12. PROVIDE SOLID BLOCKING @ 8'-0"oc MAX FOR ALL 2x12 REPETITIVE FRAMING. PROVIDE SOLID BLOCKING OR SIMPSON TB X-BRIDGING @ 8'-0"oc MAX FOR ALL 1½" LSL AND 1¾" LVL REPETITIVE FRAMING WITH A DEPTH OF 11¼" OR GREATER.
13. ROUND HOLES IN STEEL PLATES TO BE 1/16" OVERSIZE. SLOTTED HOLES IN STEEL PLATES SHALL BE 1/16" WIDER THAN THE BOLT DIAMETER AND HAVE A LENGTH OF 2 TIMES THE BOLT DIAMETER. THE DIRECTION OF THE SLOTTED LENGTH IS INDICATED ON THE DETAILS (VSH OR HSH). INSTALL BOLT AT THE CENTER LINE OF THE HOLE. BOLT HOLES IN WOOD SHALL BE ROUND AND 1/32" OVERSIZE. CUT OFF BOLT THREADED END FLUSH WITH NUT WHEN REQUIRED BY FINISHES AND 1" MAXIMUM FROM NUT OTHERWISE. PROVIDE STANDARD CUT WASHERS UNDER HEAD AND NUT WHERE BOLT BEARS ON WOOD. USE PLATE OR MALLEABLE IRON WASHERS AT EXPOSED CONDITIONS OR AS INDICATED.
14. ALL BOLTED OR NAILED STRAP CONNECTIONS SHALL HAVE AN EQUAL NUMBER OF BOLTS OR NAILS EACH SIDE OF THE SPLICE JOINT. THE FIRST BOLT OR NAIL FROM EACH SIDE OF THE SPLICED OR STRAPPED MEMBER SHALL BE EQUIDISTANT FROM THE SPLICE. STRAPS USING 16d NAILS ON 2x MATERIAL TO BE INSTALLED ON THE 1½" EDGE OF THE MEMBER.

    ALL STRAPS SHALL BE INSTALLED WITH 10d NAILS, AS SPECIFIED BY THE MANUFACTURER, FOR FULL STRAP CAPACITY. NO NAIL SUBSTITUTIONS. FILL ALL NAIL HOLES FOR PRECUT STRAPS (EG: LSTA, MSTA, MSTC, MTS, HTS, ETC). FOR COILED STRAPS, SEE 3/S-1.3 FOR NAILING REQUIREMENTS.

15. THE CONTRACTOR SHALL VERIFY THAT THE MOISTURE CONTENT OF ALL FRAMING LUMBER AND SHEATHING MEET THE REQUIREMENTS OF THE SPECIFICATIONS AT THE TIME OF INSTALLATION AND AT CLOSE-IN. THE CONTRACTOR SHALL PROVIDE ALLOWANCE FOR DIFFERENTIAL SHRINKAGE BETWEEN FLOORS, ETC.
16. VENTING IS REQUIRED IN ENCLOSED FRAMING AREAS, SAD. DRILL BLOCKING AND LEDGERS AND PROVIDE SKIP BLOCKING AS DETAILED.
17. SAD FOR CEILING INFO. WHERE REQUIRED PROVIDE CEILING JOISTS PER 4/S-1.3, UNO.
18. ALL SHEATHING SHALL HAVE 1/8" GAP AT ALL EDGES AND JOINTS. TYPICAL SHEATHING:
    A. FLAT ROOF SHEATHING (SLOPE 2:12 OR LESS): 19/32" T&G APA RATED SHEATHING (40/20) EXP 1 WITH 10d @ 6"oc EDGES (PEN) AND 12"oc FIELD UNO ON PLANS. LAY PERPENDICULAR TO FRAMING MEMBERS. BLOCK EDGES WITH 2x4 LAID FLAT WHERE NOTED ON THE PLANS AND DETAILS. NO PANELS LESS THAN 24" WIDE SHALL BE USED. STAGGER SHEETS.

A DESIGN CRITERIA

DESIGN CRITERIA: 2019 CALIFORNIA CODE OF REGULATIONS, TITLE 24, PART 2 (CBC)
FLOOR LIVE LOAD: 50 PSF (REDUCIBLE) + 15 PSF PARTITION. 100 PSF AT EXITWAYS.
ROOF LIVE LOAD: 20 PSF (REDUCIBLE)
FUTURE SOLAR: 3 PSF
RISK CATEGORY: III
WIND DATA: ULTIMATE WIND SPEED (3 SEC GUST) IN MPH: 99
WIND EXPOSURE: C
INTERNAL WIND PRESSURE COEFFICIENT (GCPI) = ±0.18
COMPONENTS AND CLADDING DESIGN PRESSURES FOR SYSTEMS DESIGNED BY OTHERS SHALL COMPLY WITH THE FOLLOWING LOADS. LOADS ARE ULTIMATE, IN PSF, AND ARE UNREDUCED FOR TRIBUTARY AREA:

BUILDING A:
ROOF (ZONE 1): 37.7 WALL (ZONE 4): 23.5
ROOF (ZONE 2): 49.8 WALL (ZONE 5): 28.9
ROOF (ZONE 3): 67.9

BUILDING B:
ROOF (ZONE 1): 24.1 WALL (ZONE 4): 24.1
ROOF (ZONE 2): 33.5 WALL (ZONE 5): 29.7
ROOF (ZONE 3): 52.3

EARTHQUAKE DATA:
SEISMIC IMPORTANCE FACTOR, I_e: 1.25
MAPPED SPECTRAL RESPONSE ACCELERATIONS: S_S = 1.369; S_1 = 0.481
SITE CLASS: D
SPECTRAL RESPONSE COEFFICIENTS: S_{DS} = 0.913; S_{D1} = 0.583
SEISMIC DESIGN CATEGORY: D

BUILDING A:
SEISMIC FORCE RESISTING SYSTEM(S): SPECIAL STEEL MOMENT FRAMES.
REENTRANT CORNER IRREGULARITY
RESPONSE MODIFICATION FACTOR(S): R = 8.0
SEISMIC RESPONSE COEFFICIENT(S), C_S = 0.148 (ULTIMATE)
ANALYSIS PROCEDURE USED: EQUIVALENT LATERAL FORCE

BUILDING B:
SEISMIC FORCE RESISTING SYSTEM(S): WOOD FRAMED SHEAR WALLS
RESPONSE MODIFICATION FACTOR(S): R = 6.5
SEISMIC RESPONSE COEFFICIENT(S), C_S = 0.176 (ULTIMATE)
ANALYSIS PROCEDURE USED: EQUIVALENT LATERAL FORCE

MAXIMUM ANTICIPATED INELASTIC STORY DRIFT = 0.015 x HEIGHT

BUILDING A: 2.4" PER STORY

BUILDING B: 3.2"

PROVIDE DEFORMATION COMPATIBILITY PER ASCE 7 SECTION 12.12.5 FOR NON-STRUCTURAL ITEMS, INCLUDING CLADDING, STAIRS, GLAZING, ETC.

B GENERAL NOTES

1. REFER TO SHEETS S1.1, THROUGH S1.7 FOR STANDARD DETAILS OF CONSTRUCTION. REFER TO THE PROJECT SPECIFICATIONS FOR MATERIALS AND METHODS.
2. BUILDING DIMENSIONS SHOWN ARE FOR GENERAL REFERENCE ONLY. SEE ARCHITECTURAL DRAWINGS (SAD) FOR ALL ACTUAL BUILDING DIMENSIONS. ANY DISCREPANCIES ARE TO BE BROUGHT TO THE ATTENTION OF THE ARCHITECT/ENGINEER SO CLARIFICATION CAN BE MADE PRIOR TO COMMENCING WORK.
3. STRUCTURAL DRAWINGS SHALL NOT BE SCALED. ALL DIMENSIONS AND FIT SHALL BE DETERMINED AND VERIFIED BY THE CONTRACTOR PRIOR TO COMMENCING WORK.
4. DETAILS NOT FULLY OR SPECIFICALLY SHOWN SHALL BE OF SAME NATURE AS OTHER SIMILAR CONDITIONS.
5. REFER TO ARCHITECTURAL DRAWINGS FOR SIDEWALK SLABS AND DIMENSIONS.
6. COORDINATION OF MECHANICAL, ELECTRICAL, PLUMBING, AND SITE UTILITY SYSTEMS WITH THE STRUCTURAL SYSTEM IS THE RESPONSIBILITY OF THE GENERAL CONTRACTOR. USE DETAILS ON SHEETS S1.1 THROUGH S1.7. AT CONDITIONS WHERE THESE DETAILS DO NOT APPEAR TO APPLY, NOTIFY THE STRUCTURAL ENGINEER PRIOR TO INSTALLATION. AT CONDITIONS WHERE FIELD MODIFICATIONS OF MECHANICAL, ELECTRICAL, PLUMBING, OR SITE UTILITIES AFFECT STRUCTURAL SYSTEMS, NOTIFY STRUCTURAL ENGINEER PRIOR TO INSTALLATION.
7. VERIFY WEIGHTS AND LOCATIONS OF MECHANICAL UNITS WITH MECHANICAL ENGINEER PRIOR TO PLACEMENT. UNITS VARYING OVER 10% IN WEIGHT SHALL BE REVIEWED BY THE STRUCTURAL ENGINEER PRIOR TO INSTALLATION (MECHANICAL WEIGHTS SHOWN ARE MAXIMUM). CONTRACTOR TO VERIFY MECHANICAL UNIT SIZES AND WEIGHTS AS INSTALLED PRIOR TO INSTALLATION OF SPECIAL FRAMING TO ENSURE CORRECT PLACEMENT UNDER CURBS, ETC. SEE 9/S-1.3 AND 1/S-1.5
8. SHORING AND BRACING DESIGN, MATERIALS AND INSTALLATION SHALL BE PROVIDED BY THE GENERAL CONTRACTOR, AND SHALL BE ADEQUATE FOR ALL LOADS. LEAVE IN PLACE AS LONG AS MAY BE REQUIRED FOR SAFETY AND UNTIL FINAL STRUCTURAL CONSTRUCTION IS COMPLETED. THE CONTRACTOR SHALL ENGAGE A LICENSED CIVIL OR STRUCTURAL ENGINEER TO PROVIDE SHORING.
9. SPECIAL INSPECTIONS ARE REQUIRED PER THE DSA 103 TESTING AND INSPECTION FORM.
10. VEHICULAR TRAFFIC, HEAVY EQUIPMENT AND MATERIAL STAGING SHALL NOT BE ALLOWED ADJACENT TO ANY RETAINING/BASEMENT WALL, NEW OR EXISTING WITHIN A HORIZONTAL DISTANCE EQUAL TO THE WALL HEIGHT MEASURED FROM THE BOTTOM OF FOOTING OR 5'-0" WHICHEVER IS GREATER, UNLESS APPROVED BY THE STRUCTURAL ENGINEER OR NOTED OTHERWISE. WITHIN THIS ZONE, ONLY HAND-OPERATED EQUIPMENT ("WHACKERS", VIBRATORY PLATES, OR PNEUMATIC COMPACTORS) SHALL BE USED TO COMPACT THE BACKFILL SOILS.
11. SUBMIT ENGINEERING FOR DEFERRED APPROVAL ITEMS TO ARCHITECT/ENGINEER FOR REVIEW AND SUBMITTAL TO THE BUILDING DEPARTMENT FOR APPROVAL PRIOR TO FABRICATION. DEFERRED APPROVAL ITEMS SHALL BE DESIGNED AND DETAILED BY MANUFACTURER TO ACCOMMODATE HORIZONTAL AND VERTICAL MOVEMENTS AS NOTED IN STRUCTURAL DRAWINGS. GENERAL CONTRACTOR SHALL REVIEW AND APPROVE DIMENSIONS AND DETAILS SHOWN ON THE SHOP DRAWINGS PRIOR TO SUBMITTAL. MANUFACTURER TO PROVIDE DRAWINGS AND CALCULATIONS DESIGNED IN ACCORDANCE WITH THE CBC AND SPECIFICATIONS, PREPARED AND SIGNED BY A CALIFORNIA LICENSED CIVIL OR STRUCTURAL ENGINEER FOR THE FOLLOWING ITEMS, UNLESS NOTED OTHERWISE:
    A. ELEVATOR - STRUCTURAL DESIGN AND DRAWINGS OF ELEVATOR GUIDES, RAILS, SUPPORTS, ETC, SHALL BE PROVIDED BY THE ELEVATOR MANUFACTURER/SUPPLIER. CONFORM TO CAL OSHA REQUIREMENTS.
    B. STORE FRONT, CURTAIN WALL, GLAZING AND SKYLIGHT SYSTEMS: INCLUDE ATTACHMENTS TO STRUCTURE.

SHEET INDEX

S-0.1	GENERAL NOTES
S-1.1	TYPICAL CONCRETE DETAILS
S-1.2	TYPICAL WOOD DETAILS
S-1.3	TYPICAL WOOD DETAILS
S-1.4	TYPICAL METAL DECKING DETAILS
S-1.5	TYPICAL METAL DECKING DETAILS
S-1.6	TYPICAL CFS ELEVATION AND CONNECTION DETAILS
S-1.7	TYPICAL CFS DETAILS
S-A2.1	FOUNDATION PLAN - BLDG-A
S-A2.2	SECOND FLOOR FRAMING PLAN - BLDG A
S-A2.3	ROOF FRAMING PLAN - BLDG-A
S-A3.1	FRAMING ELEVATIONS
S-A3.2	CFS ELEVATIONS - BLDG A
S-A4.1	FOUNDATION DETAILS
S-A5.1	STEEL FRAMING DETAILS
S-A5.2	STEEL FRAMING DETAILS
S-A5.3	STEEL SPECIAL MOMENT FRAME (WUF-W) DETAILS
S-A5.4	STEEL STAIR AND RAIN CANOPY DETAILS
S-B2.1	FOUNDATION PLAN - BLDG-B
S-B2.2	ROOF FRAMING PLAN - BLDG-B
S-B3.1	ELEVATIONS & SCHEDULES
S-B4.1	FOUNDATION DETAILS
S-B6.1	WOOD DETAILS
S-B6.2	WOOD DETAILS

ABBREVIATIONS

AB	ANCHOR BOLT
ABV	ABOVE
AC	AIR CONDITIONING
ADJ	ADJACENT
ADDL	ADDITIONAL
ALT	ALTERNATE
ALUM	ALUMINUM
ARCH	ARCHITECT
AYC	ALASKAN YELLOW CEDAR
@	AT
BF	BRACED FRAME
BLDG	BUILDING
BLK/BLKG	BLOCK/BLOCKING
BLW	BELOW
BM	BEAM
BN	BOUNDARY NAIL
BOT	BOTTOM
BRG	BEARING
BTWN	BETWEEN
BU	BUILT-UP
BYND	BEYOND
C	AMERICAN STANDARD CHANNEL
CA	CALIFORNIA
CANT	CANTILEVER
CB	CARRIAGE BOLT
CFS	COLD FORMED STEEL
CIP	CAST IN PLACE
CGL	CERTIFIED GLUED LUMBER
CJ	CONTROL JOINT
℄	CENTERLINE
CJP	COMPLETE JOINT PENETRATION
CLG	CEILING
CLR	CLEAR
COL	COLUMN
CONC	CONCRETE
CONN	CONNECTION
CONT	CONTINUOUS
COORD	COORDINATE/ COORDINATION
CMU	CONCRETE MASONRY UNIT
CSK	COUNTERSINK
CW	CUT WASHER
DBA	DEFORMED BAR ANCHOR
DBL	DOUBLE
DCW	DEMAND CRITICAL WELD
DF	DOUGLAS FIR
DIA or Ø	DIAMETER
DIAG	DIAGONAL
DIM	DIMENSION
DIST	DISTANCE
DJ	DOWEL JOINT
DL	DEAD LOAD
DN	DOWN
DO	DITTO
DWG	DRAWING
DWL	DOWEL
EA	EACH
EE	EACH END
EF	EACH FACE
ELEC	ELECTRICAL
ELEV	ELEVATOR/ELEVATION
EMBED	EMBEDMENT
EQ	EQUAL
EQUIP	EQUIPMENT
ES	EACH SIDE
EW	EACH WAY
(E)	EXISTING
EXP	EXPANSION
EXT	EXTERIOR
FDN	FOUNDATION
FIN	FINISH
FG	FINISH GRADE
FLR	FLOOR
FN	FACE NAIL
FOC	FACE OF CONCRETE
FOM	FACE OF MASONRY
FOS	FACE OF STUD
FRMG	FRAMING
FS	FAR SIDE

FTG	FOOTING
GA	GAGE or GAUGE
GALV	GALVANIZED
GB	GRADE BEAM
GL	GRIDLINE
GLB	GLUE LAMINATED BEAM
GR	GRADE
HD	HOLD DOWN
HDG	HOT-DIP GALVANIZED
HDR	HEADER
HGR	HANGER
HK	HOOK
HORIZ	HORIZONTAL
HSB	HIGH STRENGTH BOLT
HSG	HIGH STRENGTH GROUT
HSH	HORIZONTAL SLOTTED HOLE
HSS	HOLLOW STRUCTURAL SECTION
HT	HEIGHT
ID	INSIDE DIAMETER
IJ	I SHAPED WOOD BUILT UP TRUSS
INT	INTERIOR
JST	JOIST
JT	JOINT
KP	KING POST
L	STEEL ANGLE
Lb or #	POUND(s)
LGMF	LIGHT GAGE METAL FRAMING
LGMFC	LIGHT GAGE METAL FRAMING CONTRACTOR
LL	LIVE LOAD
LLH	LONG LEG HORIZONTAL
LLV	LONG LEG VERTICAL
LOC	LOCATION
LS	LAG SCREW
LSL	LAMINATED STRAND LUMBER
LVL	LAMINATED VENEER LUMBER
LWC	LIGHTWEIGHT CONCRETE
MAX	MAXIMUM
MB	MACHINE BOLT
MBM	METAL BUILDING MANUFACTURER
MC	MISCELLANEOUS CHANNEL
MECH	MECHANICAL
MEZZ	MEZZANINE
MF	MOMENT FRAME
MFR	MANUFACTURER
MIN	MINIMUM
MISC	MISCELLANEOUS
MIW	MALLEABLE IRON WASHER
MTL	METAL
MU	MECH UNIT
(N)	NEW
N/A	NOT APPLICABLE
NO or #	NUMBER
NS	NEAR SIDE
NSG	NON-SHRINK GROUT
NTS	NOT TO SCALE
NWC	NORMAL-WEIGHT CONCRETE
O/	OVER
oc	ON CENTER
OD	OUTSIDE DIAMETER
OH	OPPOSITE HAND
OPNG	OPENING
OPP	OPPOSITE
OVS	OVERSIZED
OW	OTHERWISE
OWT	OPEN WEB TRUSS
℘	PLATE or PROPERTY LINE
PA	POST ABOVE
PAF	POWER ACTUATED FASTENERS
PEN	PANEL EDGE NAIL
PERP	PERPENDICULAR
PES	PANEL EDGE SCREWS
PJP	PARTIAL JOINT PENETRATION
PLF	POUNDS PER LINEAR FOOT

PNL	PANEL
PSF	POUNDS PER SQUARE FOOT
PSI	POUNDS PER SQUARE INCH
PSL	PARALLEL STRAND LUMBER
PTDF	PRESSURE TREATED DOUGLAS FIR
PT	POINT
R	RADIUS
RBS	REDUCED BEAM SECTION
RFTR	RAFTER
REF	REFERENCE
REINF	REINFORCING
REQD	REQUIRED
RET	RETAINING
REV	REVISION
RF	ROOF
RWD	REDWOOD
S	AMERICAN STANDARD BEAM
SAD	SEE ARCHITECTURAL DRAWINGS
SB	SOLID BLOCK
SC	SLIP CRITICAL
SCD	SEE CIVIL DRAWINGS
SCHED	SCHEDULE
SED	SEE ELECTRICAL DRAWINGS
SEOR	STRUCTURAL ENGINEER OF RECORD
SFRS	SEISMIC FORCE RESISTING SYSTEM
SHTG	SHEATHING
SIM	SIMILAR
SKYLT	SKYLIGHT
SLD	SEE LANDSCAPE DRAWINGS
SMS	SHEET METAL SCREW
SMD	SEE MECHANICAL DRAWINGS
SOG	SLAB ON GRADE
SPCG	SPACING
SPD	SEE PLUMBING DRAWINGS
SPEC	SPECIFICATION
SQ	SQUARE
SS	SELECT STRUCTURAL or STAINLESS STEEL
STGR	STAGGERED
STD	STANDARD
STIFF	STIFFENER
STL	STEEL
STRUCT	STRUCTURAL
SW	SHEAR WALL
SYM	SYMMETRICAL
T&B	TOP AND BOTTOM
T&G	TONGUE AND GROOVE
THK	THICK
THRD	THREADED
THRU	THROUGH
TL	TOTAL LOAD
TN	TOE NAIL
TOC	TOP OF CONCRETE
TOF	TOP OF FRAMING
TOM	TOP OF MASONRY
TOP	TOP OF PLYWOOD
TOS	TOP OF STEEL
TOT	TOTAL
TU	TILT UP
TYP	TYPICAL
UNO	UNLESS NOTED OTHERWISE
VERT	VERTICAL
VIF	VERIFY IN FIELD
VSH	VERTICAL SLOTTED HOLE
W	WIDE FLANGE STEEL BEAM
W/	WITH
W/O	WITHOUT
WD	WOOD
WHS	WELDED HEADED STUD
WLD	WELDED
WP	WORK POINT/WATERPROOF
WS	WOOD SCREW
WT	WEIGHT
WTS	WELDED THREADED STUD
WWR	WELDED WIRE REINFORCEMENT

C:\revit_local\21395_Liberty HS_S21C_mateap.rvt
7/26/2022 10:06:58 AM

IDENTIFICATION STAMP
DIV. OF THE STATE ARCHITECT
APP: 01-119994 INC:
REVIEWED FOR
SS ☑ FLS ☑ ACS ☑
DATE: 08/16/2022

QUATTROCCHI KWOK ARCHITECTS
Main Office:
636 Fifth Street, Santa Rosa, CA 95404
East Bay Office:
55 Harrison Street, Suite 525,
Oakland, CA 94607
(707) 576-0829

ZFA STRUCTURAL ENGINEERS
1212 fourth street | suite z zfa.com
santa rosa ca 95404 707.526.0992
zfa job no. 21395

copyright © 2020

THIS DOCUMENT AND THE IDEAS INCORPORATED HEREIN, AS AN INSTRUMENT OF PROFESSIONAL SERVICE, IS THE PROPERTY OF THE ENGINEER AND IS NOT TO BE USED, IN WHOLE OR IN PART FOR ANY OTHER PROJECT WITHOUT THE PRIOR WRITTEN AUTHORIZATION OF THE ENGINEER.

LIBERTY HIGH SCHOOL

NEW CLASSROOM BUILDING

850 2nd STREET
BRENTWOOD, CA
94513

LIBERTY UNION HIGH SCHOOL DISTRICT

REVISIONS

DSA APP NO. 01-119994
ARCH PROJECT NO: 1925.00
DRAWN BY:
DRAWING SCALE:
PTN: 61721-83 FILE NO: 7-H4
CONSTRUCTION DOCUMENTS
JUNE 24, 2022

SHEET TITLE

GENERAL NOTES

SHEET NUMBER

S-0.1

ADHESIVE ANCHOR IN 2500 PSI MIN CONCRETE

ADHESIVE TYPE	ANCHOR THRD ROD	ANCHOR REBAR	PILOT HOLE	MIN EMBED UNO H_{ef}	MIN EDGE DISTANCE C_{min}	MIN SPCG S_{min}	MIN CONC DEPTH H_{min}
SIMPSON SET-XP (ICC-ESR 2508)	⅜"Ø	#3	½"Ø	3"	1¾"	3"	H_{ef} + 2½"
	½"Ø	#4	⅝"Ø	4"	1¾"	3"	H_{ef} + 3⅛"
	⅝"Ø	#5	¾"Ø	5"	1¾"	3"	H_{ef} + 3¾"
	¾"Ø	#6	⅞"Ø	6"	1¾"	3"	H_{ef} + 4⅜"
	⅞"Ø	#7	1"Ø	7"	1¾"	3"	H_{ef} + 4"
	1"Ø	#8	1⅛"Ø	8"	1¾"	3"	H_{ef} + 5⅝"
	1¼"Ø	#10	1⅜"Ø	10"	2¾"	6"	H_{ef} + 6⅞"
HILTI HIT-HY 200R (ICC-ESR 3187)	⅜"Ø	N/A	7/16"Ø	3"	1¾"	1⅞"	H_{ef} + 1¼"
	N/A	#3	½"Ø	3"	1¾"	1⅞"	
	½"Ø	N/A	9/16"Ø	4"	1¾"	2½"	
	N/A	#4	⅝"Ø	4"	1¾"	2½"	
	⅝"Ø	#5	¾"Ø	5"	1¾"	3⅛"	H_{ef} + 1½"
	¾"Ø	#6	⅞"Ø	6"	1¾"	3¾"	H_{ef} + 1¾"
	⅞"Ø	#7	1"Ø	7"	1¾"	4⅜"	H_{ef} + 2"
	1"Ø	#8	1⅛"Ø	8"	1¾"	5"	H_{ef} + 2¼"
	N/A	#9	1⅜"Ø	9"	1¾"	5⅝"	H_{ef} + 2¾"
	1¼"Ø	N/A	1⅜"Ø	10"	1¾"	6¼"	
	N/A	#10	1½"Ø	10"	1¾"	6¼"	H_{ef} + 3"

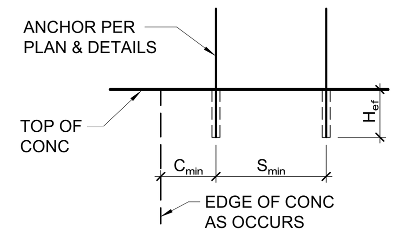

NOTES:

1. INSTALL ADHESIVE ANCHORS PER MANUFACTURER'S INFORMATION AND ICC REPORT.
2. CONTRACTOR TO VERIFY MINIMUM EDGE DISTANCES, SPACING, AND THICKNESS ARE IN ACCORDANCE W/ SCHEDULE PRIOR TO INSTALLING ANCHOR.
3. HOLES TO BE DRILLED W/ ROTARY DRILL ONLY. WHEN DRILLING HOLES IN EXISTING CONCRETE, USE CARE AND CAUTION TO AVOID CUTTING OR DAMAGING THE EXISTING REINFORCING BARS. MAINTAIN A REASONABLE CLEARANCE BETWEEN REINFORCEMENT AND THE DRILLED-IN ANCHOR. FILL ABANDONED HOLES W/ HIGH STRENGTH GROUT.
4. SPECIAL INSPECTION IS REQUIRED PER SECTION 1705A AND THE REQUIREMENTS OF THE ICC REPORTS. THE SPECIAL INSPECTOR SHALL PERFORM PERIODIC/CONTINUOUS INSPECTION IN ACCORDANCE WITH TABLE 1705A.3. THE SPECIAL INSPECTOR SHALL INSPECT ANCHOR TYPE, ANCHOR DIMENSIONS, HOLE CLEANLINESS, EMBEDMENT DEPTH, CONCRETE TYPE, CONCRETE COMPRESSIVE STRENGTH, DRILL BIT DIAMETER, HOLE DEPTH, EDGE DISTANCE(S), ANCHOR SPACING(S), CONCRETE THICKNESS, AND ADHESIVE INJECTION. TEST ANCHORS IN ACCORDANCE W/ CBC SECTION 1910A.5. SEE DRAWINGS FOR SPECIFIC TENSION TEST LOADS FOR ANCHORS.

16 ADHESIVE ANCHOR IN CONCRETE
3/4" = 1'-0"

ENGINEER TO CALCULATE ACTUAL CAPACITY FOR ACTUAL ANCHOR CONFIGURATION
THIS TABLE REPRESENTS ONLY ABSOLUTE MINIMUMS FOR INSTALLATION PER ICC REPORT
MUST CONSIDER THICKNESS OF BASE PLATE AND/OR PROVIDE PLATE WASHER OR INCR EMBED FOR THREAD ENGAGEMENT
1"Ø SB2 IS BRITTLE STEEL FAILURE

CARBON STEEL EXPANSION ANCHORS IN 2500 PSI MIN CONC

ANCHOR TYPE	ANCHOR & PILOT HOLE DIA	MIN NOMINAL EMBED H_{nom}	MIN EDGE DISTANCE C_{min}	MIN SPCG S_{min}	MIN CONC THICKNESS H_{min}	INSTALL TORQUE (FT-LB)
SIMPSON STRONG-BOLT 2 (ICC-ESR 3037)	⅜"	1⅞"	6"	3"	3¼"	30
	½"	2¾"	6"	6"	4"	60
	⅝"	3⅜"	6½"	5"	5½"	90
	¾"	4⅛"	4¼"	10"	6"	150
	1"	5¼"	8"	8"	9"	230
HILTI KB1 (IAPMO-ER 678)	⅜"	1⅞"	8"	8"	3⅜"	20
	½"	2⅜"	4"	8½"	4"	40
	⅝"	3¼"	5½"	8"	5"	60
	¾"	4"	9½"	5"	5½"	110

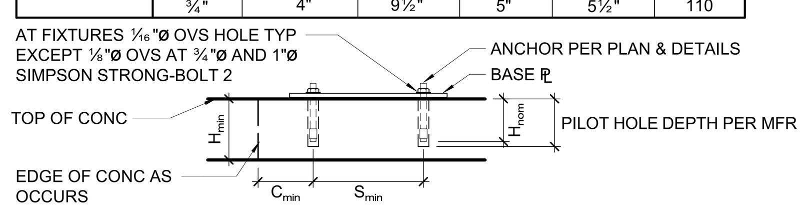

NOTES:

1. INSTALL EXPANSION ANCHORS PER MANUFACTURER'S INFORMATION AND ICC REPORT INSTRUCTIONS. SPECIAL INSPECTION IS REQUIRED PER SECTION 1705A AND THE REQUIREMENTS OF THE ICC REPORTS. DSA/OSHPD - FOR OSHPD ADD "OSHPD ANCHOR TESTING" NOTES
2. CONTRACTOR TO VERIFY MINIMUM EDGE DISTANCES, SPACING AND THICKNESS ARE IN ACCORDANCE W/ SCHEDULE PRIOR TO INSTALLING ANCHOR.
3. WHEN INSTALLING DRILLED-IN ANCHORS IN EXISTING REINFORCED CONCRETE, USE CARE AND CAUTION TO AVOID CUTTING OR DAMAGING THE EXISTING REINFORCING BARS. MAINTAIN A REASONABLE CLEARANCE BETWEEN REINFORCEMENT AND THE DRILLED-IN ANCHOR. FILL ABANDONED HOLES W/ HIGH STRENGTH GROUT.
4. THE SPECIAL INSPECTOR SHALL PERFORM PERIODIC/CONTINUOUS INSPECTION IN ACCORDANCE WITH TABLE 1705A.3. THE SPECIAL INSPECTOR SHALL INSPECT ANCHOR TYPE, ANCHOR DIMENSIONS, HOLE CLEANLINESS, EMBEDMENT DEPTH, CONCRETE TYPE, CONCRETE COMPRESSIVE STRENGTH, DRILL BIT DIAMETER, HOLE DEPTH, EDGE DISTANCE(S), ANCHOR SPACING(S), CONCRETE THICKNESS, AND TIGHTENING TORQUE.
5. TEST ANCHORS IN ACCORDANCE W/ CBC SECTION 1910A.5.

17 EXPANSION ANCHOR IN CONCRETE
3/4" = 1'-0"

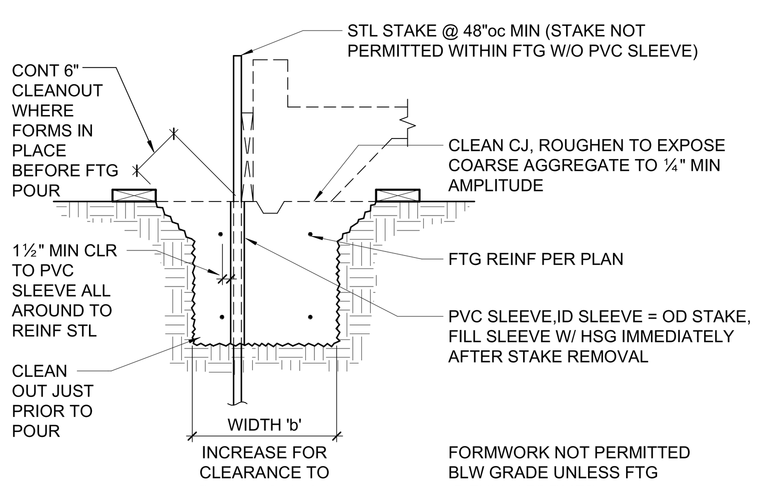

NOTE:
FOUNDATION CONCRETE MAY BE PLACED DIRECTLY INTO NEAT EXCAVATIONS PROVIDED THE FOUNDATION TRENCH WALLS ARE STABLE AS DETERMINED BY THE GEOTECHNICAL ENGINEER SUBJECT TO THE APPROVAL OF THE AUTHORITY HAVING JURISDICTION.

18 FORMWORK STAKES AT FOOTING
3/4" = 1'-0"

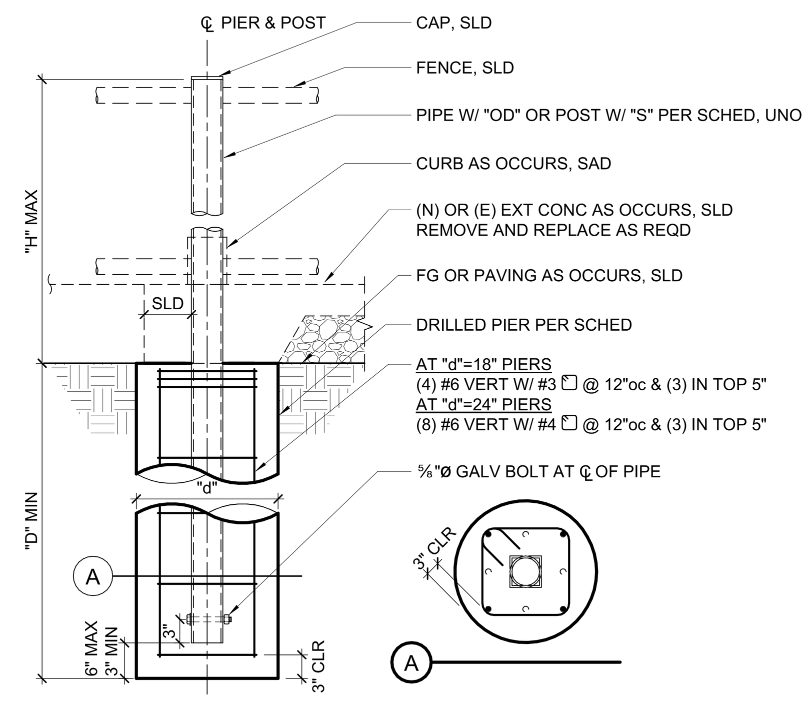

FENCE/GATE TYPE[3]	"H" MAX HT ABV GR	"OD"/"S" MIN SIZE[5]	MAX SPCG BTWN PIERS	"D" MIN PIER DEPTH	"d" PIER DIA
8'-0" HIGH FENCE, ORNAMENTAL	8'-0"	3" x 12GA	8'-0"	5'-0"	18"
8'-0" HIGH SINGLE GATE, ORNAMENTAL[4]	8'-0"	3" x 12GA	8'-0"	5'-0"	18"
8'-0" HIGH DOUBLE GATE, ORNAMENTAL[4]	8'-0"	3" x 12GA	8'-0"	5'-0"	18"

PIPE & PIER SCHEDULE[1,2]

NOTES:

1. IF GROUND WATER IS ENCOUNTERED AT PIERS CONSULT GEOTECHNICAL ENGINEER FOR PEIR CASTING REQUIREMENTS.
2. WINDSCREENS, PRIVACY NETTINGS, SLATS, ETC. ARE NOT PERMITTED FOR THE LIFETIME OF THE FENCE/GATE, UNLESS NOTED OTHERWISE.
3. PERFORATED METAL PANEL PERMITTED ON GATE PANEL AND FOR 4'-0" MAX ON FENCE PANEL.
4. ORNAMENTAL FENCE & GATE PIER DESIGN IS BASED ON AEGIS II INDUSTRIAL ORNAMENTAL STEEL FENCE BY AMERISTAR. ORNAMENTAL FENCE & GATE POSTS ARE PER THE MANUFACTURER. IF AN ALTERNATIVE IS USED, CONTACT ZFA IMMEDIATELY.
5. F_y = 30KSI MIN UNO OR AS SPECIFIED BY MANUFACTURER.

12 DRILLED PIERS FOR FENCING
3/4" = 1'-0"

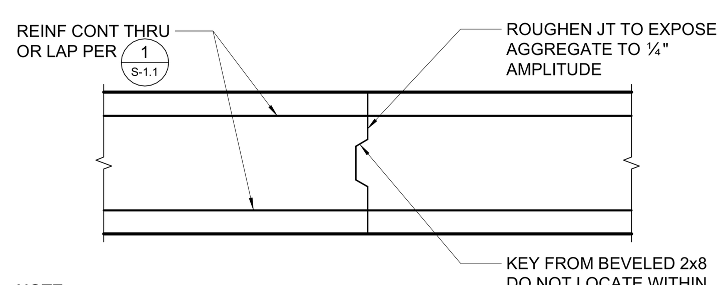

NOTE:
LOCATION OF JOINTS TO BE SUBMITTED TO ARCHITECT/ENGINEER FOR REVIEW PRIOR TO PLACEMENT OF CONCRETE

13 FOOTING CONSTRUCTION JOINT
3/4" = 1'-0"

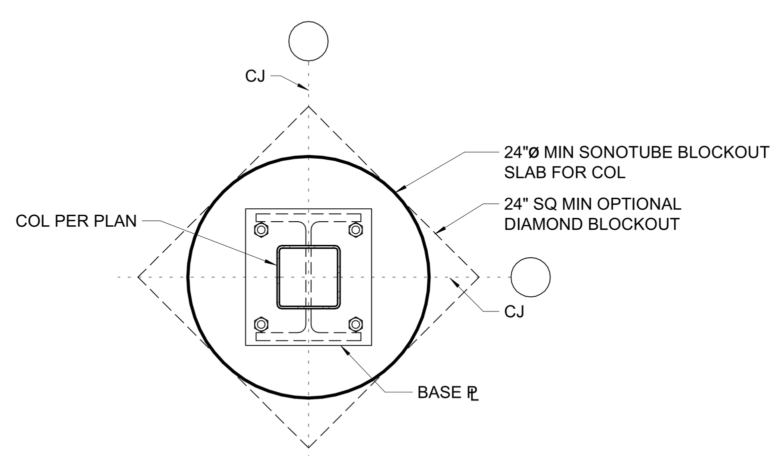

14 SLAB BLOCKOUT
1" = 1'-0"

SCREW ANCHOR IN 2500 PSI MIN CONCRETE

ANCHOR TYPE	ANCHOR AND PILOT HOLE DIA	MINIMUM EMBEDMENT H_{nom}	MINIMUM EDGE DIST C_{min}	MINIMUM SPCG S_{min}	MINIMUM CONCRETE THICKNESS H_{min}	MINIMUM INSTALL TORQUE (FT-LB)	MAXIMUM INSTALL TORQUE (FT-LB)
SIMPSON TITEN HD (ICC-ESR 2713)	¼"	1⅝"	1½"	1½"	3¼"	10	24
	⅜"	2½"	1¾"	3"	4"	10	50
	½"	3¼"	1¾"	3"	5"	10	65
	⅝"	4"	1¾"	3"	6"	10	100
	¾"	5½"	1¾"	3"	8¾"	20	150
HILTI KH-EZ (ICC-ESR 3027)	¼"	1⅝"	1½"	1½"	3¼"	10	18
	⅜"	2½"	1½"	3"	4"	10	40
	½"	3"	1¾"	3"	4¾"	10	45
	⅝"	3¼"	1¾"	4"	5"	10	85
	¾"	4"	1¾"	4"	6"	20	95

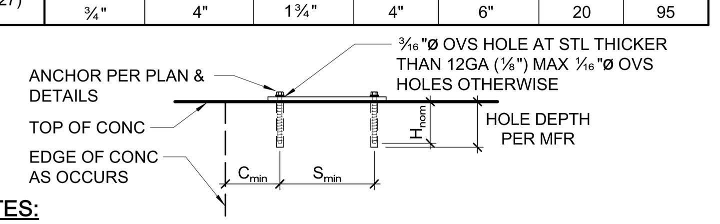

NOTES:

1. INSTALL SCREW ANCHORS PER MANUFACTURER'S INFORMATION AND ICC REPORT INSTRUCTIONS. SPECIAL INSPECTION IS REQUIRED PER SECTION 1705A OF THE CBC AND THE REQUIREMENTS OF THE ICC REPORTS. INSTALLED ANCHORS SHALL BRING CONNECTED PLIES INTO FIRM CONTACT, MEETING THE INSTALL TORQUE BUT NOT EXCEEDING THE MAXIMUM INSTALL TORQUE.
2. CONTRACTOR TO VERIFY MINIMUM EDGE DISTANCES, SPACING AND THICKNESS ARE IN ACCORDANCE W/ SCHEDULE PRIOR TO INSTALLING ANCHOR.
3. HOLES TO BE DRILLED W/ ROTARY DRILL ONLY. WHEN INSTALLING DRILLED-IN ANCHORS IN EXISTING REINFORCED CONCRETE, USE CARE AND CAUTION TO AVOID CUTTING OR DAMAGING THE EXISTING REINFORCING BARS. MAINTAIN A REASONABLE CLEARANCE BETWEEN REINFORCEMENT AND THE DRILLED-IN ANCHOR. FILL ABANDONED HOLES W/ HIGH STRENGTH GROUT.
4. THE SPECIAL INSPECTOR SHALL PERFORM PERIODIC/CONTINUOUS INSPECTION IN ACCORDANCE WITH TABLE 1705A.3. THE SPECIAL INSPECTOR SHALL INSPECT ANCHOR TYPE, ANCHOR DIMENSIONS, HOLE CLEANLINESS, EMBEDMENT DEPTH, CONCRETE TYPE, CONCRETE COMPRESSIVE STRENGTH, DRILL BIT DIAMETER, HOLE DEPTH, EDGE DISTANCE(S), ANCHOR SPACING(S), CONCRETE THICKNESS, AND TIGHTENING TORQUE.
5. TEST ANCHORS IN ACCORDANCE W/ CBC SECTION 1910A.5.

15 SCREW ANCHOR IN CONCRETE
3/4" = 1'-0"

NOTES:
1. LOCATION OF PIPE/CONDUIT BY OTHERS.
2. PROVIDE SLEEVE AT PIPE PER 2/S-1.1 SIM.

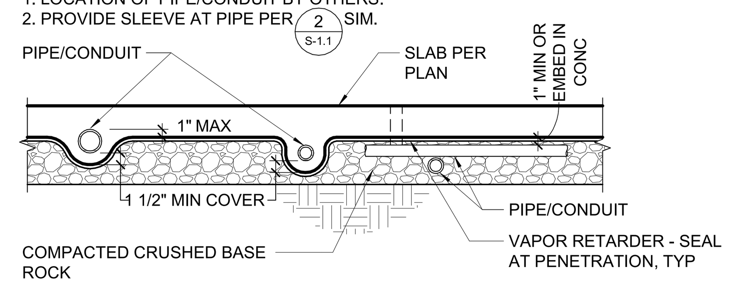

PIPE/CONDUIT REQUIRING EMBEDMENT IN CONC | PIPE/CONDUIT IN COMPACTED ROCK

7 CONDUIT & PIPE AT SLAB ON GRADE
3/4" = 1'-0"

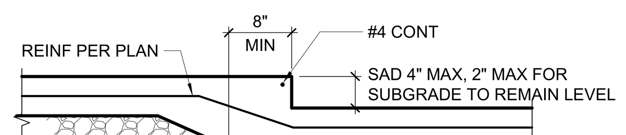

8 DEPRESSED SLAB - 4" MAX
3/4" = 1'-0"

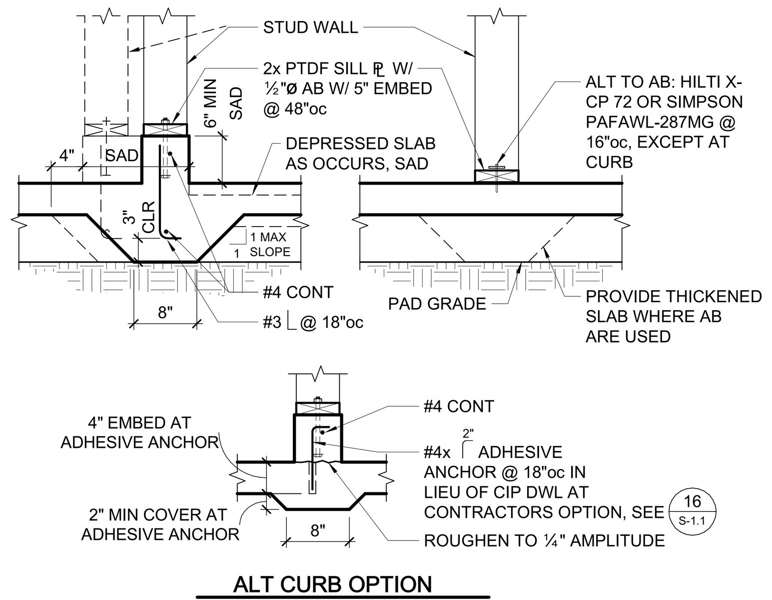

9 NON-BEARING STUD WALL AT SLAB
3/4" = 1'-0"

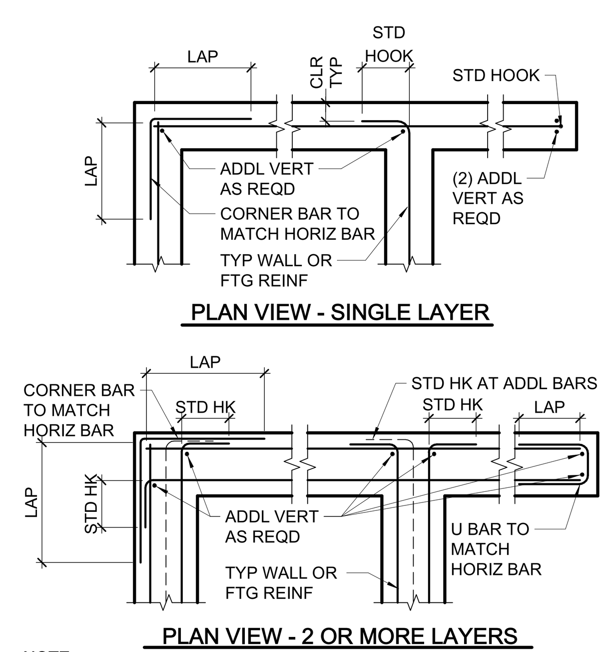

NOTE:
FOOTING REINFORCING AT CORNER AND INTERSECTION TO BE SIMILAR

10 TYPICAL CORNER, INTERSECTION AND END REINFORCING
3/4" = 1'-0"

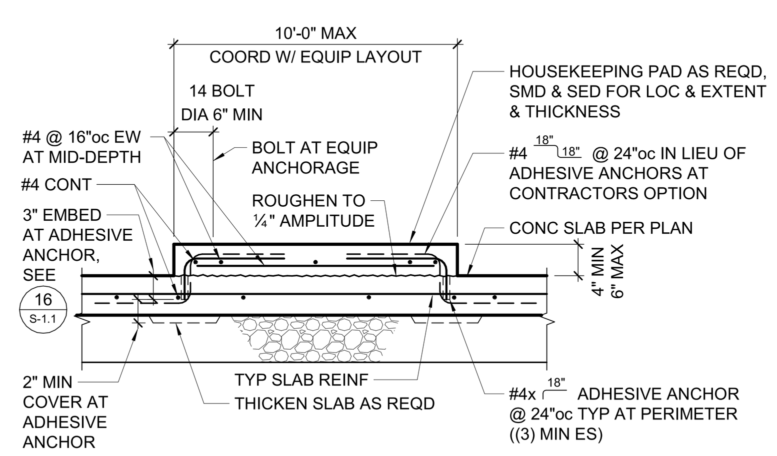

11 TYPICAL HOUSEKEEPING PAD AT SLAB ON GRADE
3/4" = 1'-0"

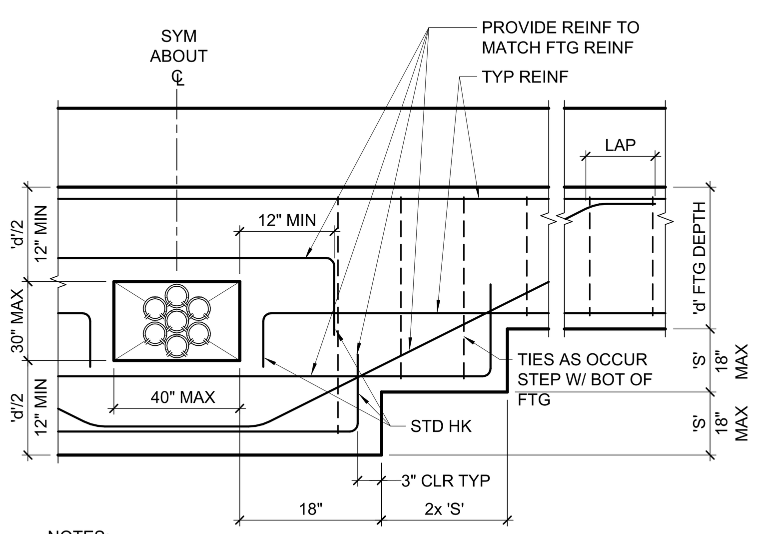

NOTES:
1. DO NOT LOCATE BLOCKOUT WITHIN 48" OF SHEAR WALL HOLD DOWN, IN FRAME FOUNDATIONS OR COLUMN PAD FOOTINGS.
2. MINIMUM DISTANCE BETWEEN BLOCKOUTS OR OTHER PIPES TO BE 48".

3 FOUNDATION BLOCKOUT
3/4" = 1'-0"

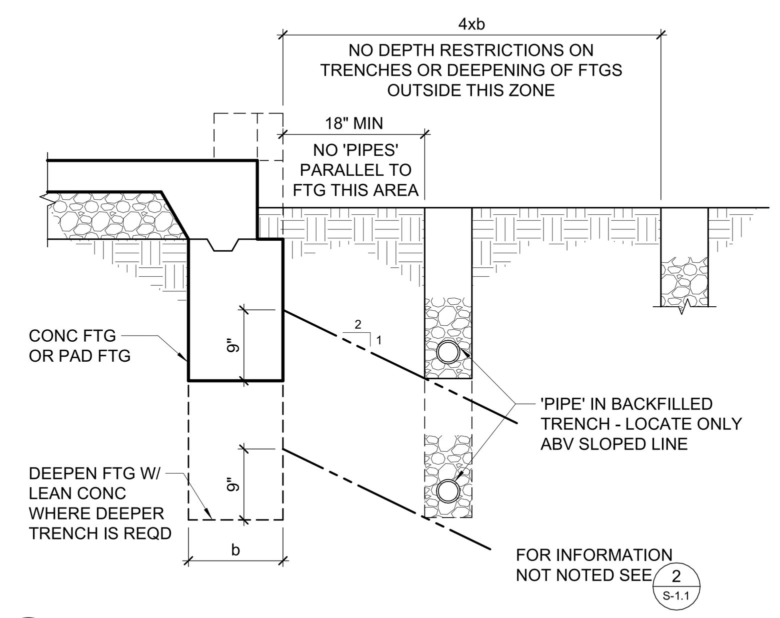

4 TRENCHING ADJACENT TO FOOTING
3/4" = 1'-0"

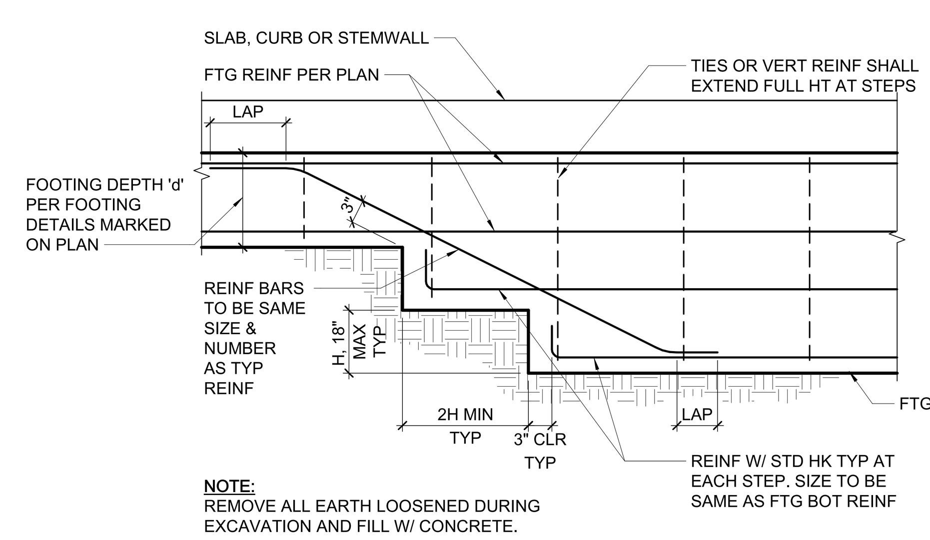

NOTE:
REMOVE ALL EARTH LOOSENED DURING EXCAVATION AND FILL W/ CONCRETE.

5 STEPPED FOOTING
3/4" = 1'-0"

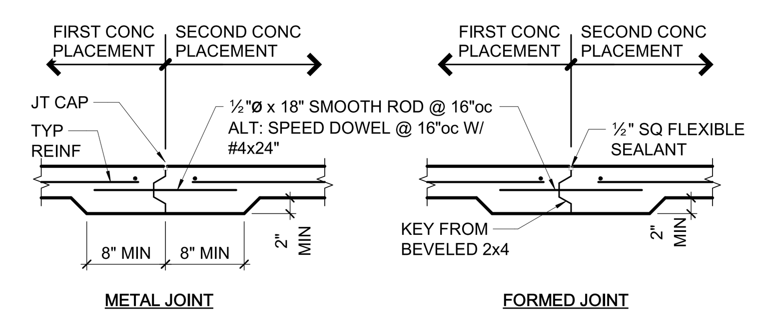

A CONSTRUCTION/DOWEL JOINT

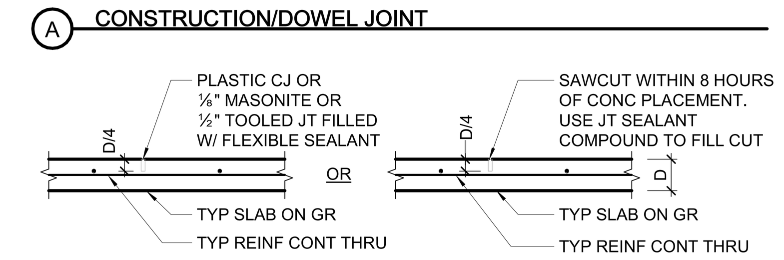

B CONTROL JOINT

6 SLAB ON GRADE JOINTS
3/4" = 1'-0"

MINIMUM BAR LAPS FOR REINFORCING STEEL CONCRETE STRENGTH: 3000 PSI OR GREATER - (STAGGER SPLICES)					
SIZE	LAP LENGTH	SIZE	LAP LENGTH	SIZE	LAP LENGTH
#3	17"	#6	34"	#9	86"
#4	24"	#7	56"	#10	105"
#5	34"✻	#8	70"	#11	126"

(CLASS B TOP BAR)
BAR SPCG SHALL NOT BE LESS THAN 4x BAR DIA OR 4".
✻ WHERE COVER NOT LESS THAN 1½", #5 LAP LENGTH = 28"

CONC COVER FOR REINF STL .... 'CLR'

CAST AGAINST EARTH OR GR .... 3"

EXPOSED TO EARTH (FORMED) OR WEATHER
- #5 & SMALLER .... 1½"
- #6 & LARGER .... 2"

NOT EXPOSED TO EARTH OR WEATHER
- #5 & SMALLER .... 1"
- #6 & LARGER, & ALL BM STIRRUPS, COL TIES & SPIRALS .... 1½"

ALL REINF SHALL EXTEND AS FAR AS POSSIBLE. WHERE BAR SPLICES ARE REQUIRED, BARS SHALL BE LAPPED PER SCHEDULE ABOVE UNLESS DETAILED OTHERWISE. WHERE REINF TERMINATES AT END OF MEMBER, REINF SHALL END IN A STD 90° OR 180° HK UNLESS DETAILED OTHERWISE.

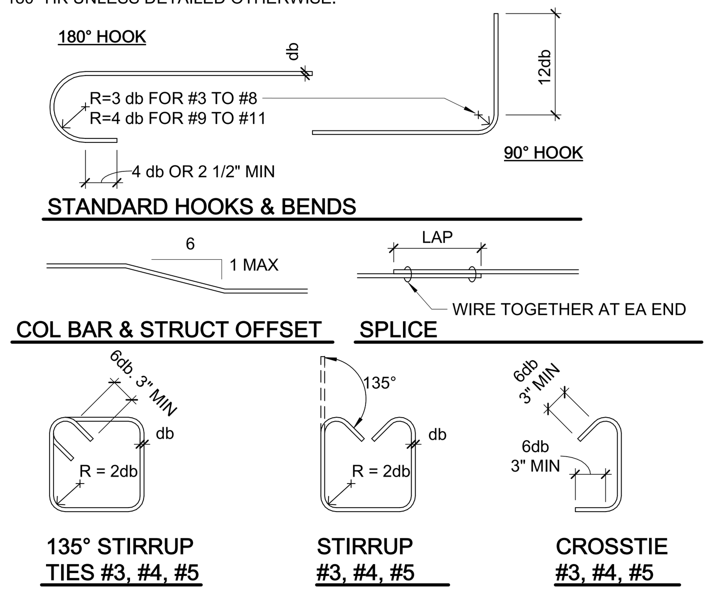

1 TYPICAL REINFORCING DETAILS (f'c = 3000psi MIN)
3/4" = 1'-0"

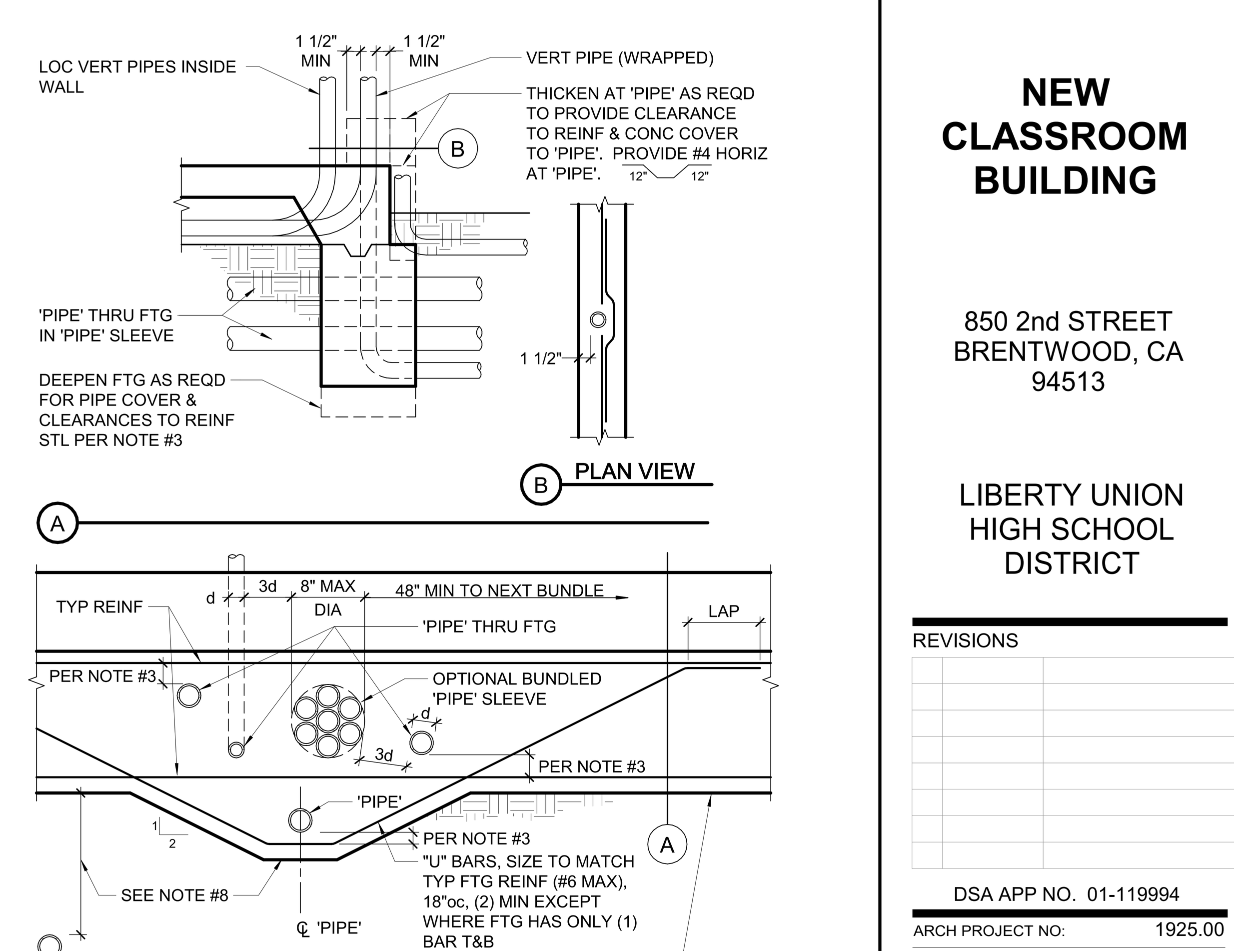

NOTES:

1. 'PIPE' = ANY PENETRATION THRU OR EMBEDDED IN FOUNDATION.
2. ALL PIPES THROUGH FOOTINGS TO BE WRAPPED OR SLEEVED AS FOLLOWS:
   a. SLEEVES: PROVIDE 1" MIN CLEAR ALL AROUND O.D. PIPE TO I.D. SLEEVE, UNO. SEAL SLEEVE ENDS W/ MASTIC OR PLASTIC BITUMINOUS CEMENT.
   b. WRAPPED VERTICAL PIPES: PROVIDE ⅛" NOMINAL SHEET FOAM W/ (3) WRAPS MINIMUM, UNO.
   c. WRAPPED HORIZONTAL PIPES: PROVIDE ⅛" NOMINAL SHEET FOAM W/ (8) WRAPS MINIMUM, UNO.
   d. UNDERGROUND FIRE LINES 4" AND LARGER:
      1. SLEEVES: PROVIDE 2" MIN CLEAR ALL AROUND O.D. PIPE TO I.D. SLEEVE. SEAL ENDS PER ABOVE.
      2. WRAPPED: PROVIDE ⅛" NOMINAL SHEET FOAM W/ (16) WRAPS MINIMUM.
3. WRAPPED AND SLEEVED PIPES SHALL HAVE 1½" MIN CLEAR TO REINF STEEL. MINIMUM CONCRETE COVER AT PIPES TO BE 3".
4. CLEARANCE BETWEEN 'PIPES' TO BE 3d MIN TYP W/ A MAXIMUM OF (8) PIPES PER 48". GROUPS OF PIPES MAY BE BUNDLED AS SHOWN, EXCEPT IN PAD FOOTINGS.
5. NO 'PIPE' TO RUN PARALLEL IN FOOTINGS, STEM OR CURB.
6. PVC CONDUIT ('PIPE') EMBEDDED IN CURB/STEM MAY BE WIRE TIED TO HORIZONTAL REINF.
7. NO HORIZONTAL PIPES ALLOWED THROUGH FOOTING WITHIN 2'-0" EACH SIDE OF HOLDOWNS OR STEEL COLUMNS. NO VERTICAL PIPES ALLOWED IN FOOTINGS AT BRACED FRAMES.
8. PROVIDE 18" MIN OF COMPACTED FILL ABOVE PIPES UP TO 12"Ø, FOR LARGER PIPES INCREASE COMPACTED FILL DEPTH 1'-0" FOR EACH 6" INCREASE IN PIPE DIAMETER. OTHERWISE DEEPEN FOOTING AS SHOWN.

2 PIPES THRU FOOTING
3/4" = 1'-0"

IDENTIFICATION STAMP
DIV. OF THE STATE ARCHITECT
APP: 01-119994 INC:
REVIEWED FOR
SS ☑ FLS ☑ ACS ☑
DATE: 08/16/2022

QUATTROCCHI KWOK ARCHITECTS
Main Office:
636 Fifth Street, Santa Rosa, CA 95404
East Bay Office:
55 Harrison Street, Suite 525,
Oakland, CA 94607
(707) 576-0829

ZFA STRUCTURAL ENGINEERS
1212 fourth street | suite z
santa rosa ca 95404
zfa job no. 21395
zfa.com
707.526.0992

copyright © 2020

THIS DOCUMENT AND THE IDEAS INCORPORATED HEREIN, AS AN INSTRUMENT OF PROFESSIONAL SERVICE, IS THE PROPERTY OF THE ENGINEER AND IS NOT TO BE USED, IN WHOLE OR IN PART FOR ANY OTHER PROJECT WITHOUT THE PRIOR WRITTEN AUTHORIZATION OF THE ENGINEER.

REGISTERED PROFESSIONAL ENGINEER CHRIS S. WARNER No. S4613 STRUCTURAL STATE OF CALIFORNIA

LIBERTY HIGH SCHOOL

NEW CLASSROOM BUILDING

850 2nd STREET
BRENTWOOD, CA
94513

LIBERTY UNION HIGH SCHOOL DISTRICT

REVISIONS

DSA APP NO. 01-119994
ARCH PROJECT NO: 1925.00
DRAWN BY:
DRAWING SCALE:
PTN: 61721-83 FILE NO: 7-H4
CONSTRUCTION DOCUMENTS
JUNE 24, 2022

SHEET TITLE
TYPICAL CONCRETE DETAILS

SHEET NUMBER
S-1.1

C:\revit_local\21395_Liberty HS_S21C_mateap.rvt
7/26/2022 10:07:02 AM

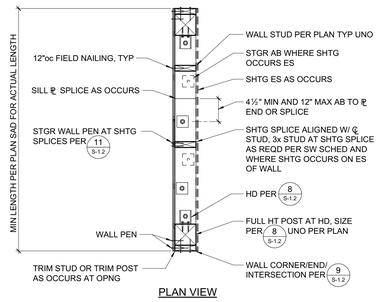

PLAN VIEW

7 SCHEMATIC SHEAR WALL CONSTRUCTION
3/4" = 1'-0"

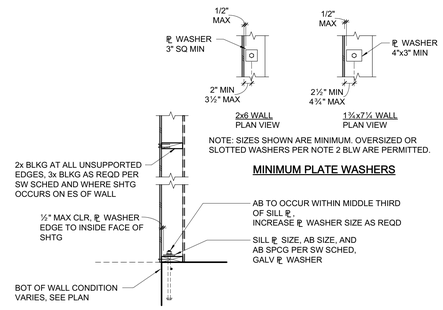

NOTE: SIZES SHOWN ARE MINIMUM. OVERSIZED OR SLOTTED WASHERS PER NOTE 2 BLW ARE PERMITTED.

MINIMUM PLATE WASHERS

SECTION

NOTES:
1. PEN = PLYWOOD/OSB EDGE NAILING PER SW SCHED.
2. SILL ℄ AB WASHER HOLE MAY BE OVERSIZED UP TO 5/16". WASHER MAY BE DIAG SLOTTED UP TO 1¾" IN LENGTH. WHERE HOLE IS OVERSIZED OR SLOTTED, PROVIDE STD CUT WASHER.

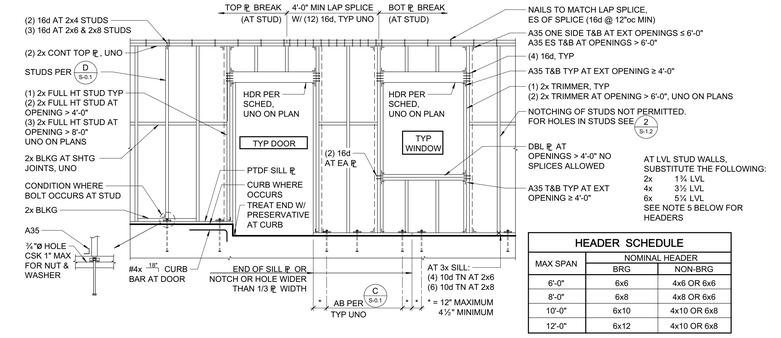

HEADER SCHEDULE		
MAX SPAN	NOMINAL HEADER	
	BRG	NON-BRG
6'-0"	6x6	4x6 OR 6x6
8'-0"	6x8	4x8 OR 6x6
10'-0"	6x10	4x10 OR 6x8
12'-0"	6x12	4x10 OR 6x8

1. HEADERS TO MATCH WIDTH OF WALL STUDS.
2. HEADERS TO BE DF #1, MIN UNO.
3. FOR LARGER OPENINGS, SEE PLANS.
4. HEADER MAY BE USED AS LOWER TOP ℄ AS REQD BY OPENING HEIGHT.
5. IN 1¾x7¼ LVL STUD WALLS, PROVIDE 6⅝" GLB + SHIM WITH DEPTH TO MATCH OR EXCEED LISTED DEPTH UNO.

1 TYPICAL STUD WALL AND OPENING FRAMING
3/8" = 1'-0"

RIM JOIST TO TOP ℄, TOE NAIL	10d @ 6"oc
TRUSSES, JOISTS OR RAFTERS AT ALL BEARING POINTS TO NAILS EACH SIDE	(2) 10d
TRUSSES, JOISTS OR RAFTERS TO SIDE OF STUDS EIGHT (8) INCH JOISTS OR LESS	(3) 16d
FOR EACH ADDITIONAL 4 INCHES OF DEPTH OF JOIST	(1) 16d
BLOCKING BETWEEN JOISTS OR RAFTERS: TO JOIST OR RAFTERS - TOE NAILS EA SIDE, EA END	(2) 10d
TO JOIST OR RAFTER BEARINGS - TOE NAILS EA SIDE	(2) 10d
BLOCKING BETWEEN STUDS, EACH END TOE NAILS	(2) 10d OR (2) 16d
BRIDGING TO JOIST, TOE NAIL EACH END	(2) 8d
2" SUBFLOOR TO JOIST OR GIRDER, BLIND & FACE NAIL	(2) 16d
SOLE PLATE TO JOIST OR BLOCKING, FACE NAIL	16d @ 16"oc
SOLE PLATE TO JOIST OR BLOCKING AT BRACED WALL PANELS	(3) 16d @ 16"oc
TOP PLATE TO STUD, END NAIL	(2) 16d
STUD TO SOLE PLATE, TOE NAIL	(4) 8d
DOUBLE STUDS AT EXTERIOR WALLS, FACE NAIL	16d @ 12"oc
DOUBLE STUDS, FACE NAIL	16d @ 24"oc
DOUBLE TOP PLATES, FACE NAIL	16d @ 12"oc
TOP PLATES, LAPS & INTERSECTIONS, FACE NAIL	(3) 16d
CONTINUOUS HEADER, TWO PIECES	16d @ 16"oc ALONG EACH EDGE
DOUBLE TOP PLATE LAP AT CORNER	(3) 16d
CONTINUOUS HEADER TO STUD, TOE NAIL	(4) 8d
CEILING JOISTS, LAPS OVER PARTITIONS, FACE NAIL	(3) 16d
CEILING JOISTS TO PARALLEL RAFTERS, FACE NAIL	(3) 16d
BUILT-UP CORNER STUDS	16d @ 12"oc
POST TO SILL/SOLE/TOP PLATE, EACH SIDE TOE NAIL	(4) 10d

10 NAILING SCHEDULE
3/4" = 1'-0"

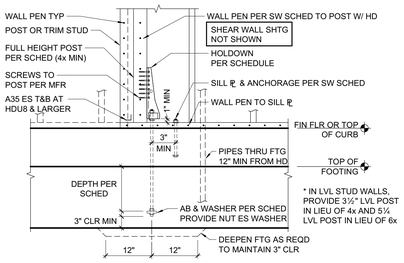

HOLDOWN	AB OR THRD ROD	WASHER AT AB	DEPTH	MIN FTG WIDTH*	MIN POST SIZE UNO ON PLANS**
HDU2	⅝"ø	⅛"x2½" SQ	12"	12"	4x
HDU4	⅝"ø	⅛"x2½" SQ	12"	12"	4x
HDU5	⅝"ø	⅛"x2½" SQ	12"	12"	4x
HDU8	⅞"ø	5/16"x3" SQ	15"	18"	6x6
HDU11	1"ø	⅜"x3½" SQ	15"	18"	6x6
HDU14*	1"ø	⅜"x3½" SQ	21"	24"	6x6

* FOOTING SIZES IN TABLE ARE MINIMUM. SEE PLAN FOR ACTUAL FOOTING SIZES.
** NUTS AT ANCHOR ROD TO BE HEAVY HEX

8 TYPICAL HOLDOWN
3/4" = 1'-0"

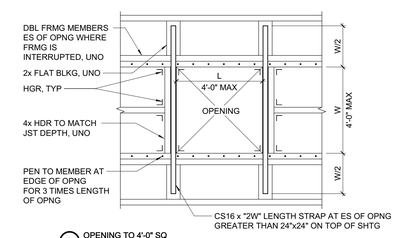

A OPENING TO 4'-0" SQ

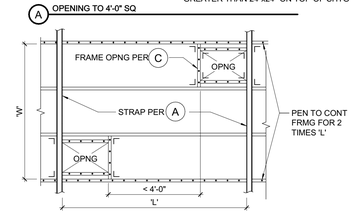

B CLOSELY SPACED OPENINGS BETWEEN FRAMING

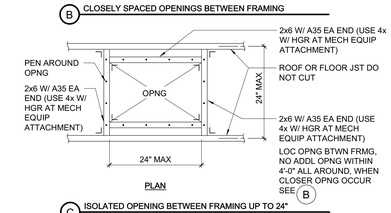

PLAN

C ISOLATED OPENING BETWEEN FRAMING UP TO 24"

5 OPENING IN DIAPHRAGM
3/4" = 1'-0"

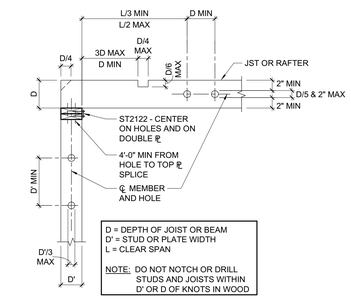

2 HOLES AND NOTCHES IN WOOD STUDS, JOISTS, AND PLATES
3/4" = 1'-0"

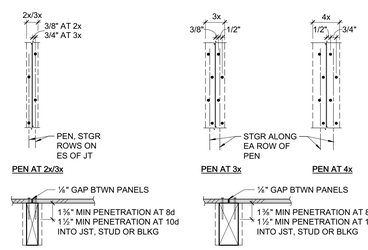

NOTE:
SHEATHING SHEETS ARE TO BE AS LARGE AS POSSIBLE. STAGGER SHEETS. JOINTS ARE TO BE CENTERED OVER BEARING. NAIL HEADS SHALL BE DRIVEN FLUSH W/ SHEATHING. MINIMUM SHEATHING SIZE IS 24" WIDTH x 48" LENGTH AT FLOOR AND ROOF, AND 12"x48" AT WALLS.

11 SHEATHING NAILING
1 1/2" = 1'-0"

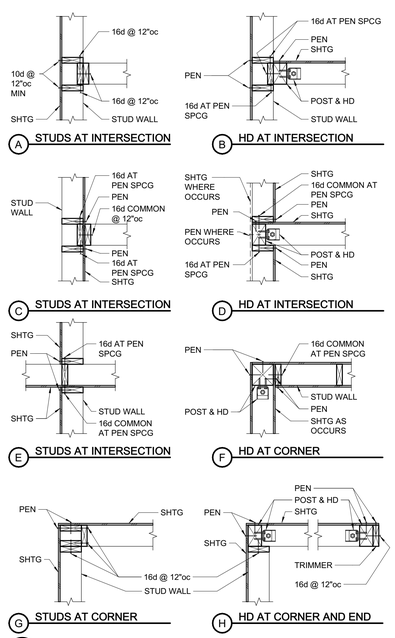

9 TYPICAL PLAN VIEW OF STUD WALL INTERSECTIONS
3/4" = 1'-0"

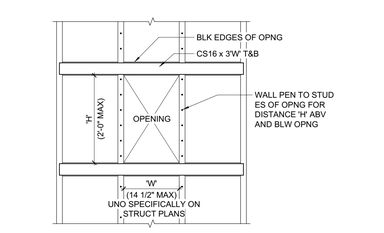

NOTES:
1. OPENINGS < 6" SQ DO NOT REQUIRE BLOCKING AND STRAPPING.
2. NO ADDITIONAL OPENINGS WITHIN 4'-0" ALL AROUND.
3. NO OPENINGS PERMITTED IN SHEAR WALL C OR HIGHER OR IN SHEAR WALLS LESS THAN 10'-0" LONG UNLESS SPECIFICALLY DETAILED ON STRUCTURAL PLANS. CONTACT STRUCTURAL ENGINEER FOR ASSISTANCE.
4. FRAME OPENINGS PER 1/S-1.2 WHERE STUDS ARE INTERRUPTED.

6 SMALL OPENINGS IN SHEAR WALLS
3/4" = 1'-0"

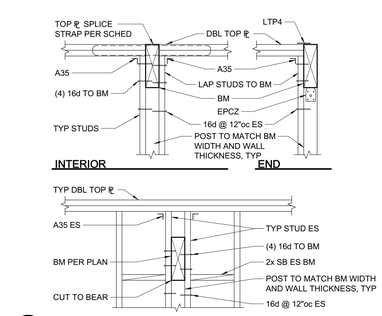

3 TYPICAL BEAM IN AND THRU STUD WALL
3/4" = 1'-0"

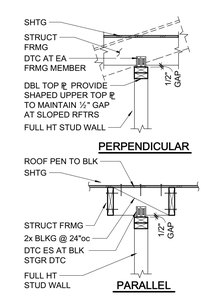

NOTE:
INSTALL SLOT NAILS AT ℄ OF SLOT W/ 1/16" GAP BTWN NAIL HEAD & CLIP

4 TYPICAL NON-STRUCTURAL STUD WALL DETAILS
3/4" = 1'-0"

IDENTIFICATION STAMP
DIV. OF THE STATE ARCHITECT
APP: 01-119994 INC:
REVIEWED FOR
SS ☑ FLS ☑ ACS ☑
DATE: 08/16/2022

QUATTROCCHI KWOK ARCHITECTS

Main Office:
636 Fifth Street, Santa Rosa, CA 95404
East Bay Office:
55 Harrison Street, Suite 525,
Oakland, CA 94607
(707) 576-0829

ZFA STRUCTURAL ENGINEERS
1212 fourth street | suite z
santa rosa ca 95404
zfa job no. 21395
zfa.com
707.526.0992

copyright © 2020

THIS DOCUMENT AND THE IDEAS INCORPORATED HEREIN, AS AN INSTRUMENT OF PROFESSIONAL SERVICE, IS THE PROPERTY OF THE ENGINEER AND IS NOT TO BE USED, IN WHOLE OR IN PART FOR ANY OTHER PROJECT WITHOUT THE PRIOR WRITTEN AUTHORIZATION OF THE ENGINEER.

REGISTERED PROFESSIONAL ENGINEER CHRIS S. WARD STRUCTURAL STATE OF CALIFORNIA

LIBERTY HIGH SCHOOL

NEW CLASSROOM BUILDING

850 2nd STREET
BRENTWOOD, CA
94513

LIBERTY UNION HIGH SCHOOL DISTRICT

REVISIONS

DSA APP NO. 01-119994
ARCH PROJECT NO: 1925.00
DRAWN BY:
DRAWING SCALE:
PTN: 61721-83 FILE NO: 7-H4
CONSTRUCTION DOCUMENTS
JUNE 24, 2022

SHEET TITLE
TYPICAL WOOD DETAILS

SHEET NUMBER
S-1.2

C:\revit_local\21395_Liberty_HS_S21C_mattaap.rvt
7/26/2022 10:07:04 AM

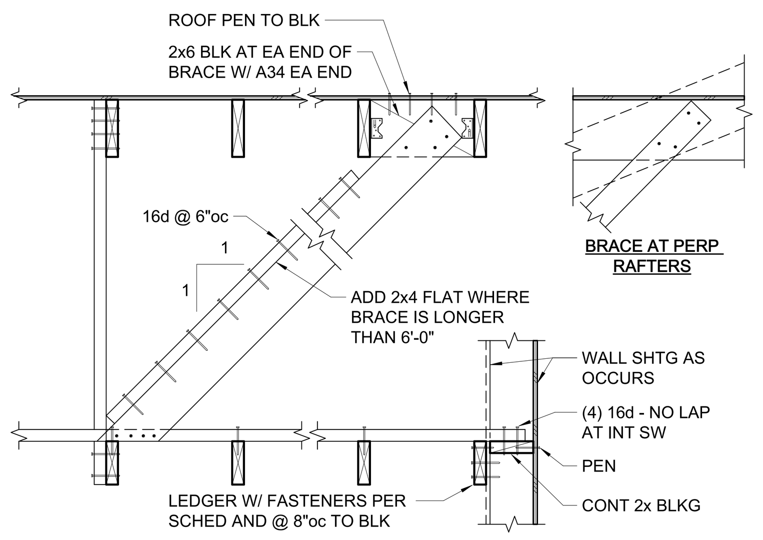

(A) AT END WALL OR FULL HEIGHT PARTITION

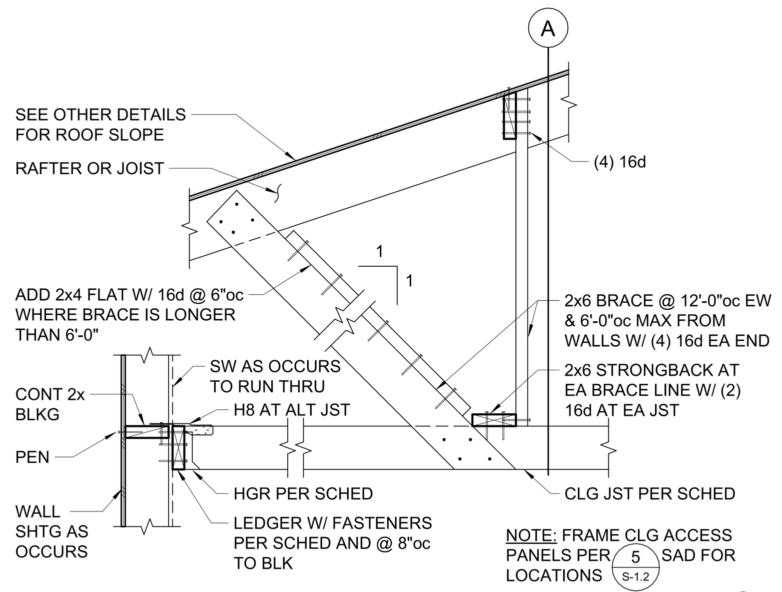

NOTE: FRAME CLG ACCESS PANELS PER (5/S-1.2) SAD FOR LOCATIONS

FOR CLG JST SCHED SEE (4/S-1.3)

11 CEILING JOISTS (SPAN TO WALLS)
3/4" = 1'-0"

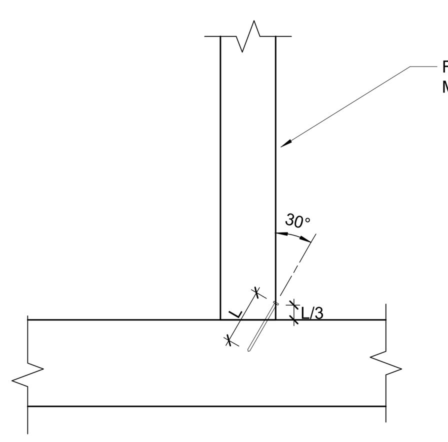

NOTES:
1. TOE-NAILS SHALL BE DRIVEN AT AN ANGLE OF APPROXIMATELY 30° WITH THE FRAMING MEMBER.
2. TOE-NAILS SHALL START AT APPROXIMATELY 1/3 THE LENGTH OF THE NAIL FROM THE FRAMING MEMBER END.

12 TYPICAL TOENAIL CONSTRUCTION
1 1/2" = 1'-0"

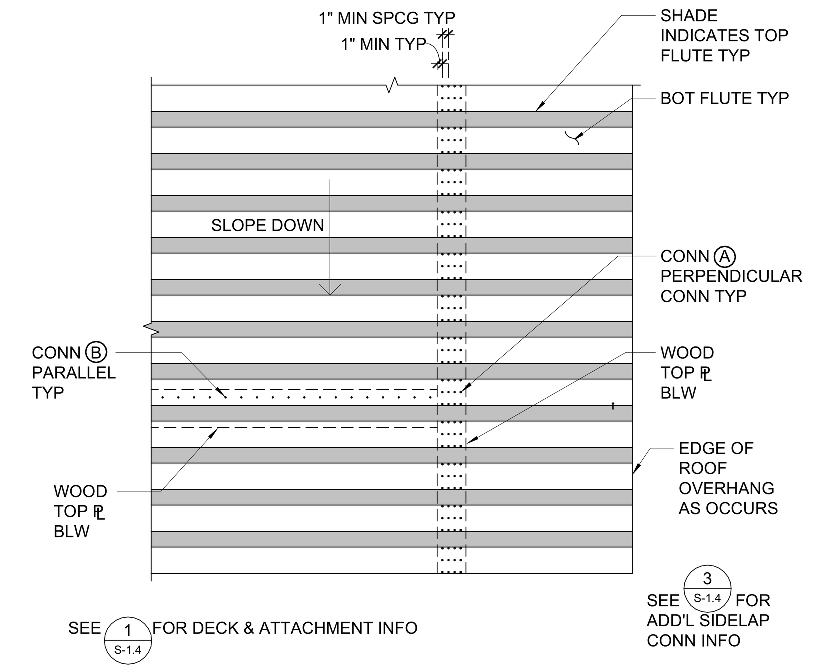

7 END AND SIDE BEARING ATTACHMENT PLAN VIEW
1/2" = 1'-0"

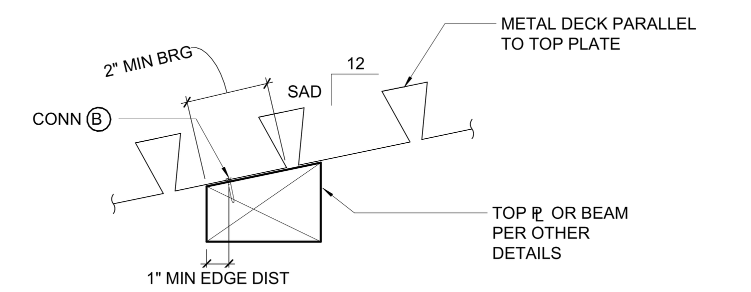

SINGLE SLOPE AT TOP PLATE PARALLEL TO DECK

8 TYPICAL SLOPED DECK SUPPORT
1 1/2" = 1'-0"

9 NOT USED
1 1/2" = 1'-0"

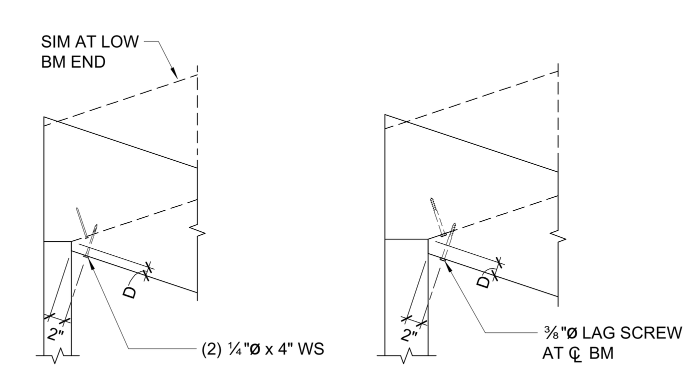

(A) CASE I (WHERE D IS LESS THAN OR EQUAL TO 1½")

(B) CASE 2 (WHERE D IS GREATER THAN 1½")

NOTES:
1. DO NOT OVERCUT NOTCHES OR SEAT CUTS.
2. D MAX = BEAM DEPTH/4 SEE OTHER DETAILS FOR ADDITIONAL NOTCH OR SEAT CUT SIZE INFORMATION.
3. MINIMUM LAG SCREW LENGTH = D + 2½".

10 BEAM SEAT CUT/NOTCH REINFORCEMENT
3/4" = 1'-0"

CEILING JOIST SCHEDULE			
MAX SPAN	JOIST SIZE	HANGER IF REQUIRED	LEDGER IF REQUIRED
9'-0"	2x4 @ 16"oc	LU24	2x4 W/ (2) 16d @ 16"oc
12'-6"	2x6 @ 16"oc	LU26	2x6 W/ (3) 16d @ 16"oc
14'-0"	2x8 @ 16"oc	LU28	2x8 W/ (4) 16d @ 16"oc
19'-0"	2x10 @ 16"oc	LU210	2x10 W/ (5) 16d @ 16"oc

NOTES:
1. CEILING JOIST SCHEDULE IS BASED ON LL = 10 psf.
2. WHERE LEDGERS ARE NAILED THROUGH WALL SHTG, USE 20d NAILS IN LIEU OF 16d NAILS.
3. PROVIDE MIDSPAN BLOCKING AT 2x10 JOISTS.

4 CEILING JOIST SCHEDULE
3/4" = 1'-0"

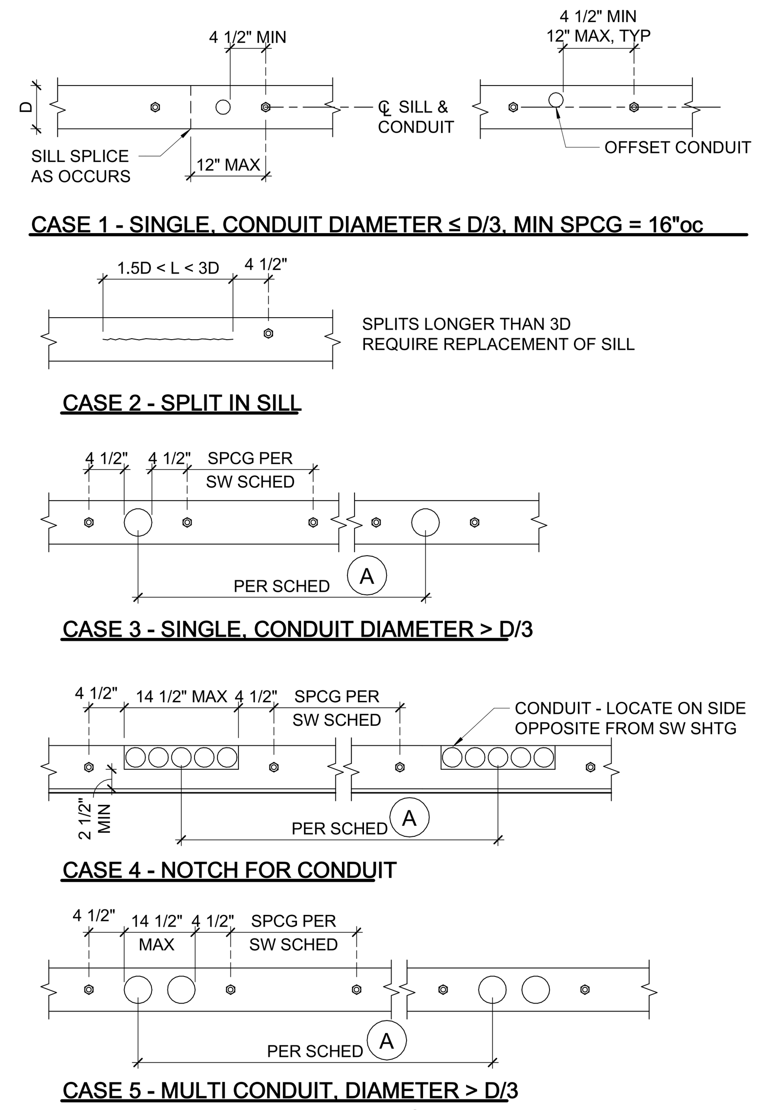

SCHEDULE A			
	CASE 3	CASE 4	CASE 5
SW(A)	48"	32"	48"
SW(B)	64"	48"	64"
SW(C)	80"	64"	N/A
SW(D)	N/A	N/A	N/A

NOTE:
1. ALL PENETRATIONS THROUGH SHEAR WALL SILL PLATE SHALL CONFORM TO THE REQUIREMENTS OF THIS DETAIL OR BE REROUTED PRIOR TO INSTALLATION OF SILL.
2. PROVIDE ADDITIONAL ANCHOR BOLTS AS REQUIRED TO MEET INDICATED SPACINGS. ADDITIONAL ANCHOR BOLTS TO BE INSTALLED AT CENTERLINE OF SILL PLATE PER 15/S-1.1 WHERE NECESSARY. AB DIA AS REQD BY SW SCHED.

5 HOLES IN PLATES AT SHEAR WALLS
3/4" = 1'-0"

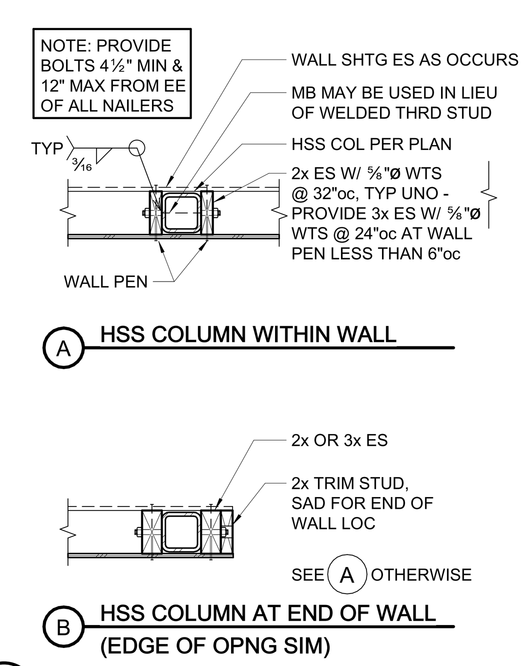

6 TYPICAL STEEL BEAM/COLUMN NAILERS
3/4" = 1'-0"

TOP PLATE SPLICE SCHEDULE		
MARK	LAP SPLICE (CASE 1)	STRAP SPLICE (CASE 2)
A	(12) 16d PER 4'-0" MIN LAP	MSTC28
B	(22) 16d PER 4'-0" MIN LAP	MSTC40
C	(26) 16d PER 6'-0" MIN LAP	MSTC52
D	N / A	CMST14 x 6'-0"

UNLESS OTHERWISE NOTED, FILL ALL HOLES WITH NAILS. SEE D/S-0.1 NOTE #14.

NOTES:
1. AT LAP SPLICES, SPACE NAILS @ 3"oc MIN (MAX 12"oc). STAGGER AT 2½" GAGE.
2. USE STRAP SPLICE WHERE BM INTERSECTS TOP PL.
3. NAILS TO MATCH LAP SPLICE ES OF SPLICE FOR CASE 1. 16d @ 12"oc MAX PLATE TO PLATE NAILING
4. USE SPLICE TYPE A UNO.
5. USE SPLICE CASE 2 WHERE 4x TOP PL IS PROVIDED.

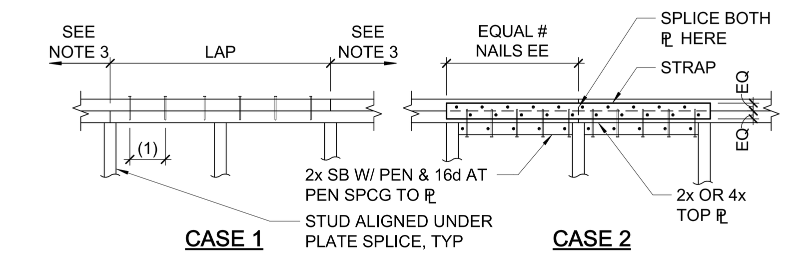

1 TOP PLATE SPLICE SCHEDULE AND DETAILS
3/4" = 1'-0"

LEDGER SPLICE SCHEDULE				
MARK	CASE	STRAP/PLATE	CASE	STRAP/PLATE
A	1	MSTA24	-	
B	1	MSTA30	-	
C	2	MSTI48	3	MSTI60
D	2	CMST14x5'-6"	3	CMST14x6'-0"
E	2	(2) MSTI48	4	PL ¼" W/ (6) 1"ø MB ES OF SPLICE

SPLICE NOTES:
1. PROVIDE 3x OR (2) 2x STUDS AT SPLICE
2. ALL NAILS TO BE 10d NAIL ALL HOLES
3. FOR CASE 1, SPLICE W/ MSTA36 AT BM
4. USE SPLICE TYPE 'A' UNO

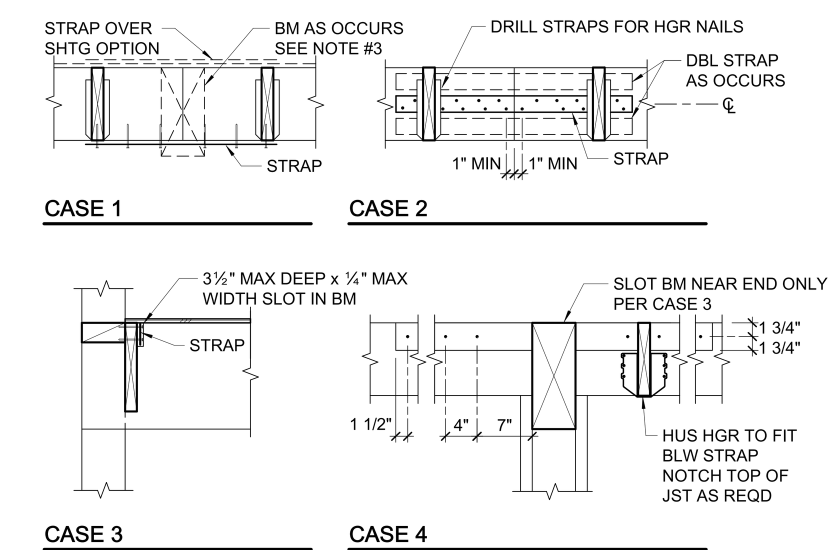

2 LEDGER OR RIM SPLICE SCHEDULE
3/4" = 1'-0"

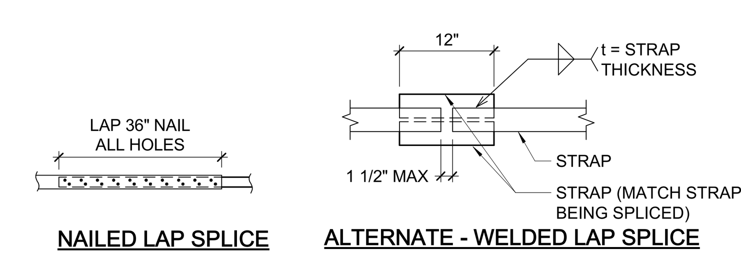

TIE STRAP SCHEDULE						
MARK	STRAP	MIN. NAILING ES OF ◆	MAX. NAIL SPACING (SEE NOTES #1 & #2)			MIN. END LENGTH (EL)
			CASE 1	CASE 2		
				EL	RL	
A	CS16	(10) 10d	10d @ 4"oc STGR	FILL ALL NAIL HOLES	10d @ 4"oc STGR	12"
B	CS14	(13) 10d	10d @ 4"oc STGR	FILL ALL NAIL HOLES	10d @ 4"oc STGR	16"
C	CMSTC16	(25) 10d	10d @ 3"oc STGR	FILL ALL NAIL HOLES	10d @ 3"oc STGR	24"
D	CMST14	(33) 10d	10d @ 3½"oc STGR	FILL ALL NAIL HOLES	10d @ 3½"oc STGR	32"
E	CMST12	(43) 10d	10d @ 3½"oc STGR	FILL ALL NAIL HOLES	10d @ 3½"oc STGR	48"

1. CASE 1 APPLIES UNLESS END LENGTH (EL) IS NOTED ON PLANS. WHERE END LENGTH (EL) IS NOTED, SEE CASE 2.
2. AS REQUIRED, PROVIDE CLOSER NAIL SPACING TO MEET MINIMUM NAILING EACH SIDE OF ◆ (DENOTES MIDPOINT OF STRAP).
3. EL = END LENGTH. RL = REMAINING LENGTH OF STRAP. SEE 3/S-1.3

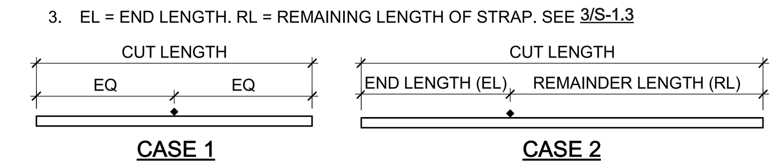

3. LOCATE STRAPS OVER SHEATHING AND BLOCK UNDER STRAP W/ FLAT 2x6 (2x4 AT CS16/CS14) WHERE NO FRAMING OCCURS, UNO.
4. SEE PLANS FOR STRAP LENGTHS, LOCATIONS AND DETAILS, UNO.
5. SPLICE STRAPS AS SHOWN WHERE LENGTH PER PLAN EXCEEDS AVAILABLE PRODUCT LENGTH

3 TIE STRAP SCHEDULE
3/4" = 1'-0"

IDENTIFICATION STAMP
DIV. OF THE STATE ARCHITECT
APP: 01-119994 INC:
REVIEWED FOR
SS ☑ FLS ☑ ACS ☑
DATE: 08/16/2022

QUATTROCCHI KWOK ARCHITECTS
Main Office:
636 Fifth Street, Santa Rosa, CA 95404
East Bay Office:
55 Harrison Street, Suite 525,
Oakland, CA 94607
(707) 576-0829

ZFA STRUCTURAL ENGINEERS
1212 fourth street | suite z zfa.com
santa rosa ca 95404 707.526.0992
zfa job no. 21395
copyright © 2020

THIS DOCUMENT AND THE IDEAS INCORPORATED HEREIN, AS AN INSTRUMENT OF PROFESSIONAL SERVICE, IS THE PROPERTY OF THE ENGINEER AND IS NOT TO BE USED, IN WHOLE OR IN PART FOR ANY OTHER PROJECT WITHOUT THE PRIOR WRITTEN AUTHORIZATION OF THE ENGINEER.

LIBERTY HIGH SCHOOL

NEW CLASSROOM BUILDING

850 2nd STREET
BRENTWOOD, CA
94513

LIBERTY UNION HIGH SCHOOL DISTRICT

REVISIONS

DSA APP NO. 01-119994
ARCH PROJECT NO: 1925.00
DRAWN BY:
DRAWING SCALE:
PTN: 61721-83 FILE NO: 7-H4
CONSTRUCTION DOCUMENTS
JUNE 24, 2022

SHEET TITLE
TYPICAL WOOD DETAILS

SHEET NUMBER
S-1.3

C:\revit_local\21395_Liberty HS_S21C_mateap.rvt
7/26/2022 10:07:06 AM

MARK	STEEL DECK GAGE & PROFILE TYPE SEE 5/S-1.4	DECK CONNECTIONS: END/INT BEARING CONN (A) SIZE & TYPE	END/INT BEARING CONN (A) PATTERN	SIDE BEARING CONN (B) SIZE & TYPE	SIDE BEARING CONN (B) SPACING	SIDELAP CONNECTION (C) SIZE & TYPE	SIDELAP CONNECTION (C) SPACING	MINIMUM SLAB FILL THICKNESS ABV DECK	MINIMUM SLAB FILL REINFORCING	REMARKS
1	A - 18 GA	PINS	36/4	PINS	12"	VSC2	12"	3½" CONCRETE MIN (5½" TOT THICKNESS MIN)	#3 @ 16"oc EW AT MID HEIGHT	
2	B - 18 GA	PINS	36/4	PINS	12"	VSC2	12"	NO CONCRETE COVER. SAD FOR INSUL	N/A	(2) SPAN MINIMUM
3	C - 18 GA	WOOD SCREWS	24/6	WOOD SCREWS	4"	SCREWS	8"	NO CONCRETE COVER. SAD FOR INSUL	N/A	ACOUSTIC

NOTES:
1. ATTACH DECK TO ALL STEEL SUPPORT FRAMING AS OCCURS. SEE 2/S-1.4
2. ALL DECK TYPES TO RECEIVE CONCRETE FILL TO HAVE FACTORY PUNCHED VENT TABS.
3. VSC2 = VERCO SIDE LAP CONNECTION.
4. PINS = HILTI X-ENP-19 L15 PER ICC ESR-2197 AND ESR-2776. .
5. SIDELAP SCREWS = HILTI S-SLC01, HILTI S-SLC02, OR #12 SELF-DRILLING OR SELF-PIERCING SCREWS PER ASTM C1513. PROVIDE NEOPRENE WASHERS AT DECK EXPOSED TO RAIN.
6. WOOD SCREWS = ITW BUILDEX TRUGRIP METAL-TO-WOOD SELF-PIERCING SCREWS. TRUGRIP TYPE 17 HWH CL 14-10 x 1 1/2" LONG AT WOOD SUPPORTS. SEE 7/S-1.3 AND 8/S-1.3 FOR ATTACHMENT OF DECK TO WOOD FRAMING.
7. ABOVE REFERENCED DECKS AND COMPOSITE DEPTHS ARE BASED ON ALLOWABLE DESIGN LOADS PER IAPMO ER-2018 VERCO MANUFACTURING - EQUIVALENT DECK MUST HAVE EQUIVALENT ALLOWABLE VERTICAL LOADS, DIAPHRAGM SHEAR VALUES, AND FLEXIBILITY FACTORS.
8. AT DECK TYPES 1 AND 2, 2 SPAN MINIMUM IS REQUIRED UNLESS SPECIFICALLY NOTED ON DECK KEY PLAN ON SHEETS S-A2.2 AND S-A2.3.
9. PROVIDE EXTRA CONCRETE TOPPING TO PROVIDE FLAT LEVEL SURFACE, 1" MAX.
10. WHERE A WELDED HEADED STUD OCCURS COINCIDENT WITH A TYPE 'A' DECK ATTACHMENT, THE TYPE 'A' ATTACHMENT MAY BE OMITTED.
11. NO CONTROL JOINTS IN CONCRETE OVER METAL DECK ALLOWED. PROVIDE CONSTRUCTION JOINTS AT 200 FEET ON -CENTER MAX PER 13/S-1.4

1 DECKING SCHEDULE
3/4" = 1'-0"

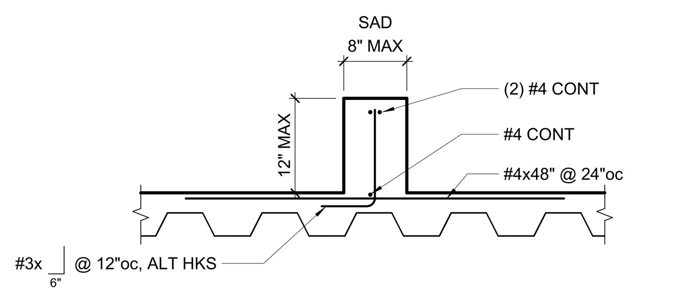

12 TYPICAL CURB ON DECK WITH CONCRETE FILL
3/4" = 1'-0"

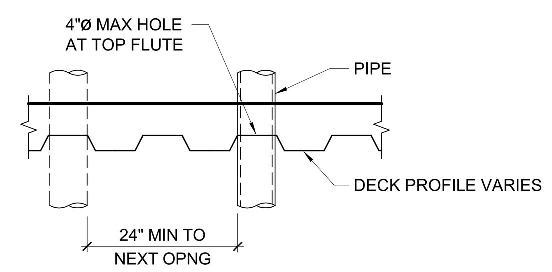

8 TYPICAL UNREINFORCED OPENING IN DECK (≤ 4")
3/4" = 1'-0"

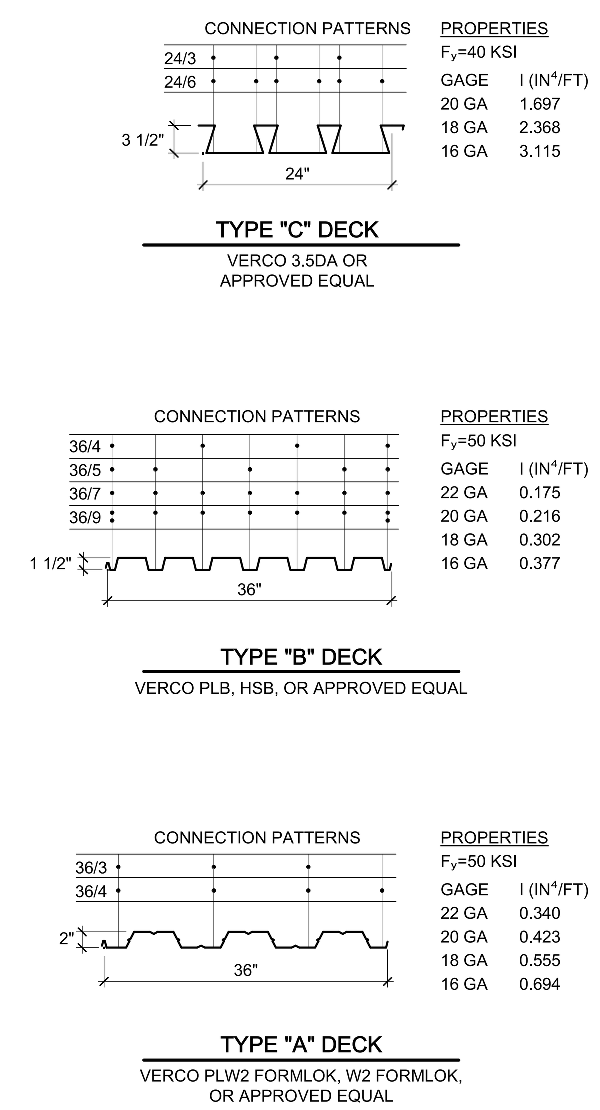

5 DECKING TYPE AND CONNECTION PATTERN
DSA NOTE:
MIN STL ROOF DECK THICKNESS IS 20GA PER CBC 2210A
REMOVE GA REFERENCES < 20GA

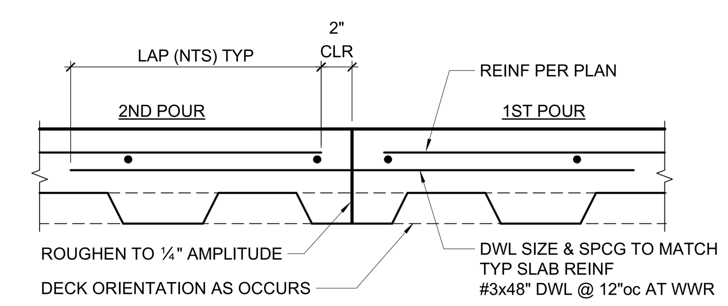

13 CONC ON METAL DECK CONSTRUCTION JOINT
1 1/2" = 1'-0"
ENGINEER NOTE: CHECK SHEAR FRICTION ACROSS JOINT.

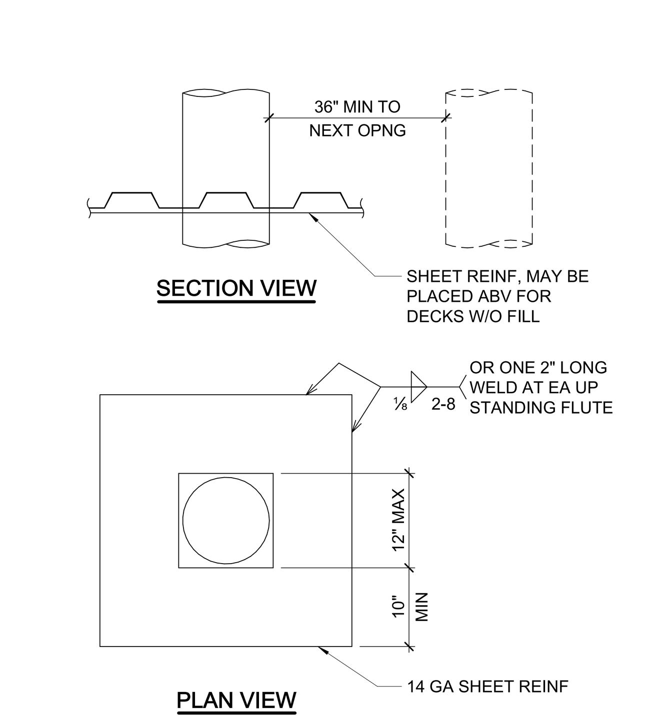

9 TYPICAL REINFORCED OPENING IN DECK (LESS THAN 12")
3/4" = 1'-0"

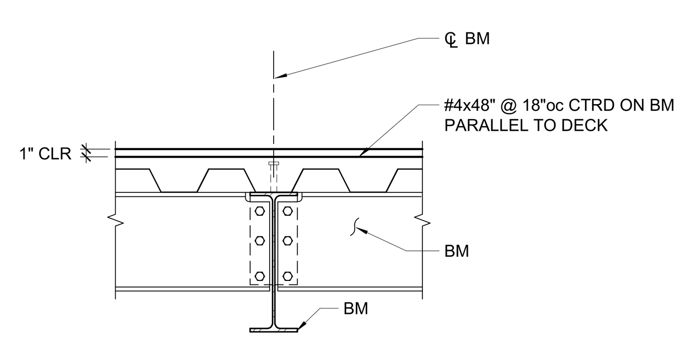

14 TYPICAL ADDL DECK SLAB REINF OVER PARALLEL BEAMS
3/4" = 1'-0"

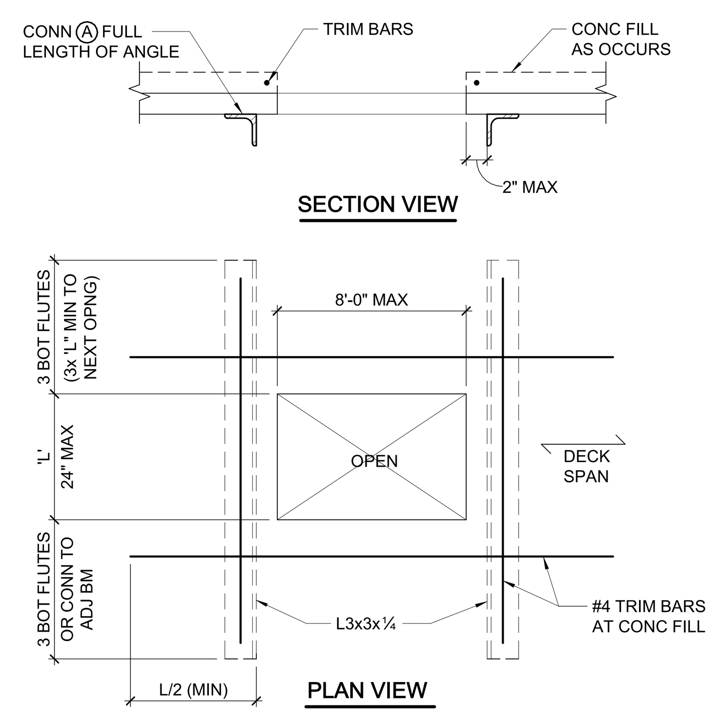

10 TYPICAL REINFORCED OPENING IN DECK (LESS THAN 24")
1" = 1'-0"

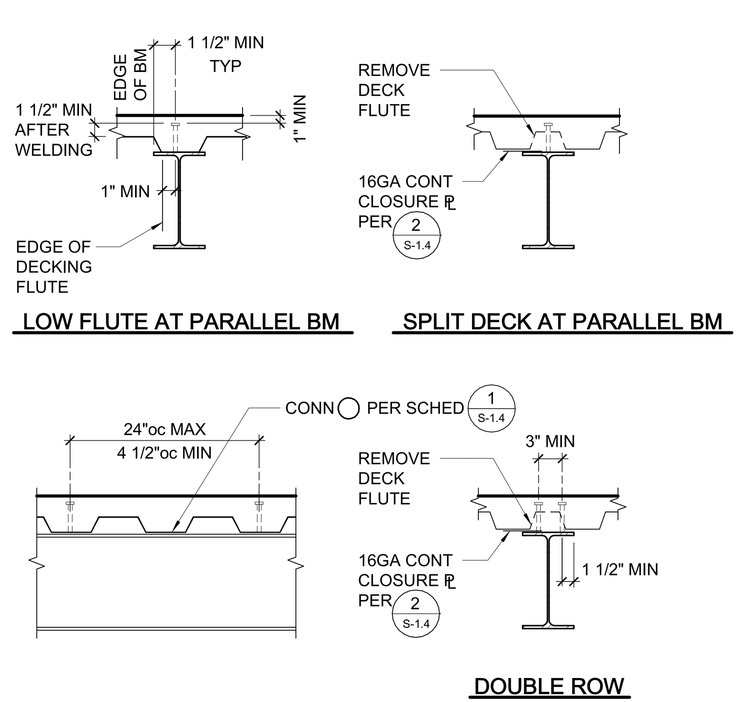

NOTES:
1. (#) ON PLAN DENOTES QUANTITY OF ¾"Ø SHEAR STUDS ON BEAM. PROVIDE ADDITIONAL STUDS WHERE REQUIRED TO MAINTAIN MAX SPACING.
2. WHERE DECK IS PERPENDICULAR (OR AT AN ANGLE) TO BEAM, START SHEAR STUD LAYOUT AT FIRST LOW FLUTE AT EACH END OF BEAM. WHEN ALL LOW FLUTES ARE FULL, REMAINING STUDS SHALL BE PLACED IN DOUBLE ROWS STARTING AT FIRST LOW FLUTE FROM EACH END OF BEAM.
3. WHERE DECK IS PARALLEL TO BEAM, SHEAR STUD LAYOUT SHALL BE EQUALLY SPACED SINGLE ROW OR DBL ROW AS REQUIRED TO MAINTAIN MIN SPACING.
4. IF FLANGE IS LESS THAN 5/16" THK PLACE SHEAR STUD AT WEB ℄ ONLY.
5. NO CONSTRUCTION JOINTS ALLOWED PARALLEL TO AND WITHIN 4'-0" OF STUDS.
6. SEE 14/S-1.4 FOR ADDITIONAL DECK INFORMATION.

15 TYPICAL COMPOSITE BEAM SHEAR STUDS
3/4" = 1'-0"

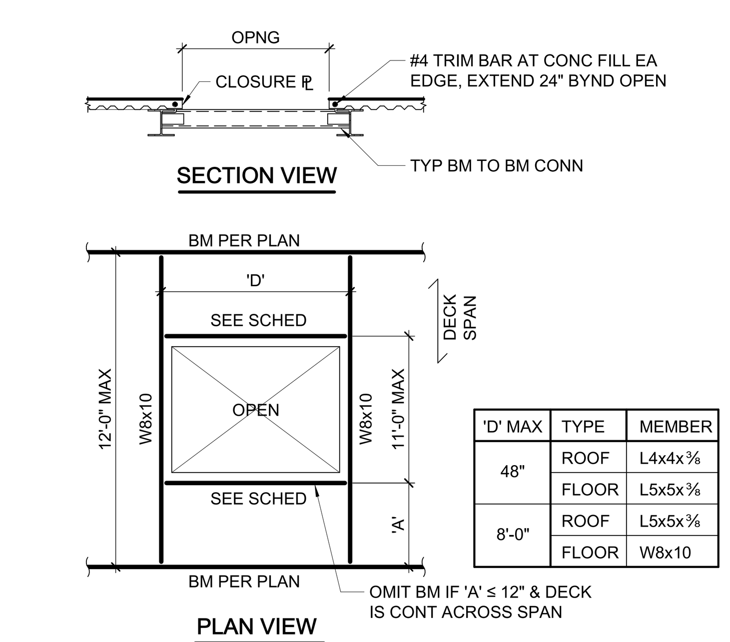

'D' MAX	TYPE	MEMBER
48"	ROOF	L4x4x⅜
	FLOOR	L5x5x⅜
8'-0"	ROOF	L5x5x⅜
	FLOOR	W8x10

11 TYPICAL FRAMED OPENING IN DECK (LESS THAN 11'-0")
1" = 1'-0"
W/O CONCRETE

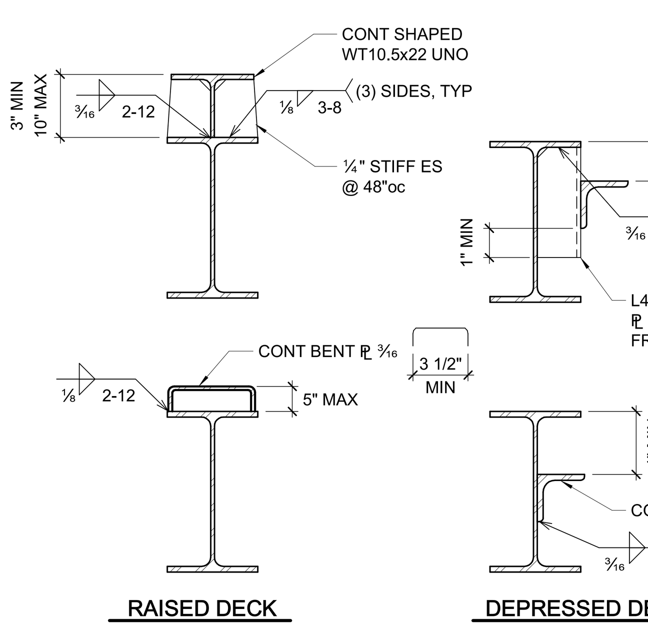

6 TYPICAL RAISED AND DEPRESSED DECK SUPPORT
1 1/2" = 1'-0"

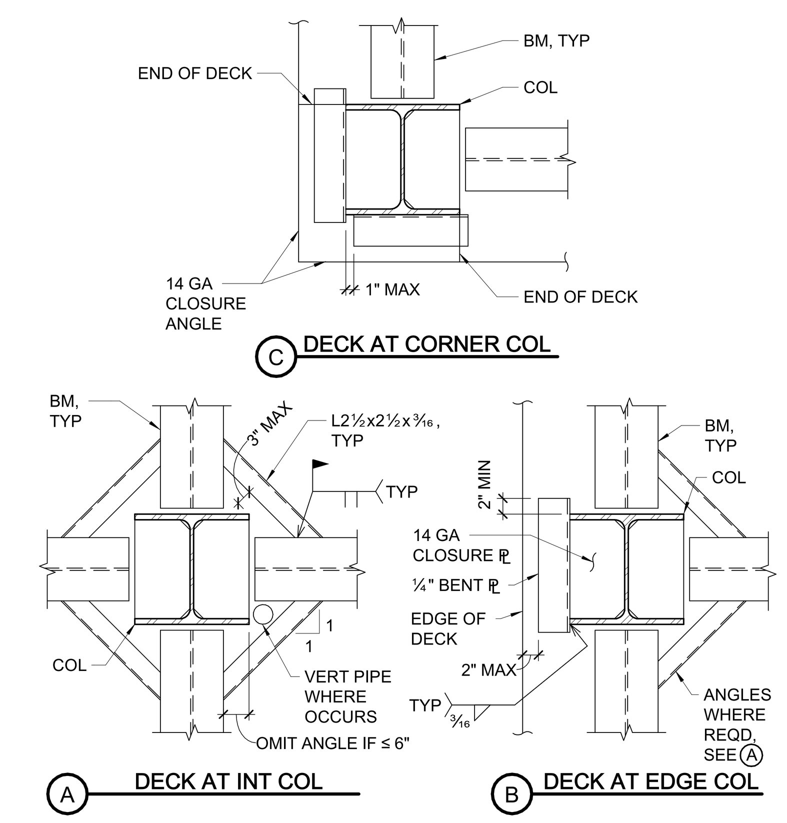

4 TYPICAL DECK SUPPORT AT COLUMN
3/4" = 1'-0"

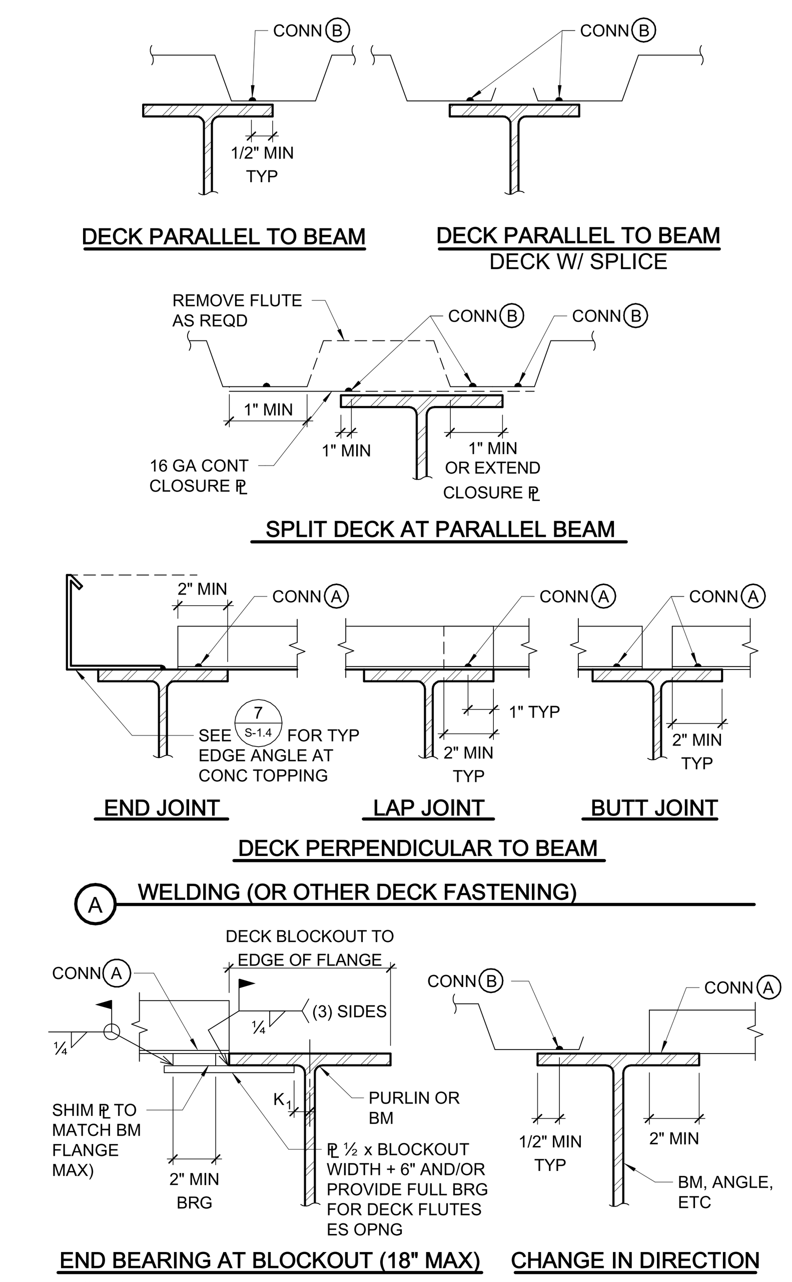

NOTES:
1. WELD OR DECK FASTENERS PER SCHEDULE. FOR DECKING SCHEDULE SEE 1/S-1.4 . AS SHOWN IN THIS DETAIL, PROVIDE ARC SEAM WELD "⊖" AT SAME SPACING AS ARC SPOT WELD "◯" PER 1/S-1.4

2 TYPICAL STEEL DECK SUPPORT AND WELDING
3/4" = 1'-0"

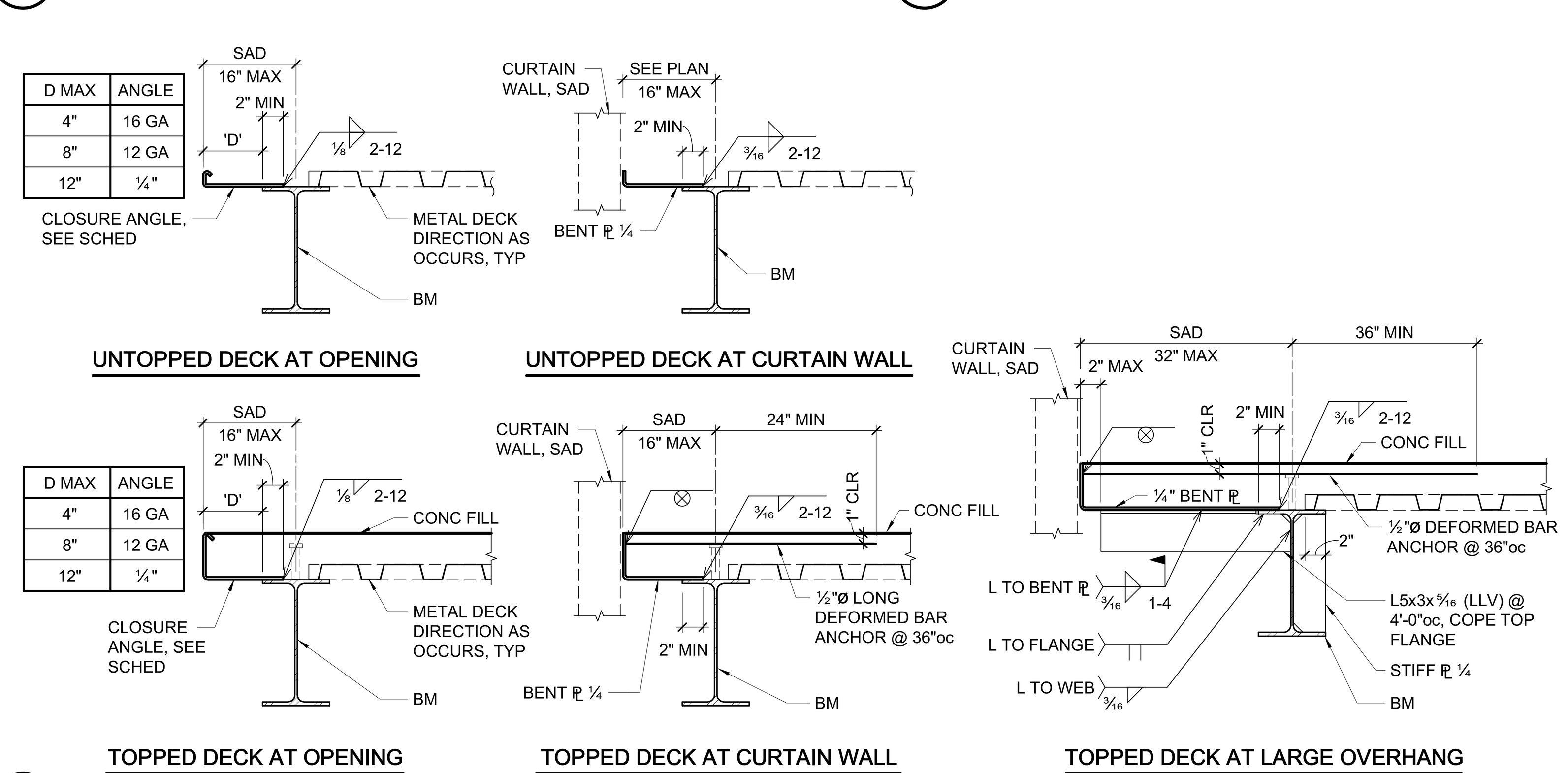

D MAX	ANGLE
4"	16 GA
8"	12 GA
12"	¼"

D MAX	ANGLE
4"	16 GA
8"	12 GA
12"	¼"

7 TYPICAL EDGE OF DECK
1" = 1'-0"

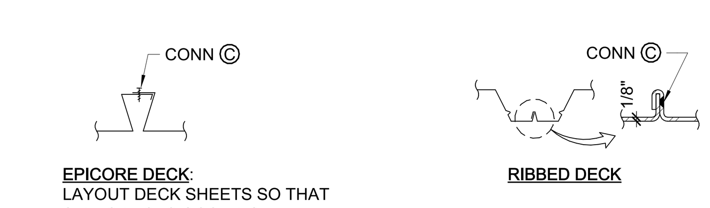

EPICORE DECK:
LAYOUT DECK SHEETS SO THAT SIDE SPLICES OCCUR ONLY AT SEAMED EDGES, AS SHOWN

RIBBED DECK

NOTE:
BUTTON PUNCH AND VERCO SIDE LAP CONN NOT SHOWN.

3 TYPICAL DECK SIDE LAP CONNECTION
3" = 1'-0"

C:\revit_local\21395_Liberty HS_S21C_mateap.rvt
7/26/2022 10:07:09 AM

IDENTIFICATION STAMP
DIV. OF THE STATE ARCHITECT
APP: 01-119994 INC:
REVIEWED FOR
SS ☑ FLS ☑ ACS ☑
DATE: 08/16/2022

QUATTROCCHI KWOK ARCHITECTS
Main Office:
636 Fifth Street, Santa Rosa, CA 95404
East Bay Office:
55 Harrison Street, Suite 525,
Oakland, CA 94607
(707) 576-0829

ZFA STRUCTURAL ENGINEERS
1212 fourth street | suite z
santa rosa ca 95404
zfa job no. 21395
zfa.com
707.526.0992

copyright © 2020

THIS DOCUMENT AND THE IDEAS INCORPORATED HEREIN, AS AN INSTRUMENT OF PROFESSIONAL SERVICE, IS THE PROPERTY OF THE ENGINEER AND IS NOT TO BE USED, IN WHOLE OR IN PART FOR ANY OTHER PROJECT WITHOUT THE PRIOR WRITTEN AUTHORIZATION OF THE ENGINEER.

REGISTERED PROFESSIONAL ENGINEER CHRIS S. WARNER No. S4613 STRUCTURAL STATE OF CALIFORNIA

LIBERTY HIGH SCHOOL

NEW CLASSROOM BUILDING

850 2nd STREET
BRENTWOOD, CA
94513

LIBERTY UNION HIGH SCHOOL DISTRICT

REVISIONS

DSA APP NO. 01-119994
ARCH PROJECT NO: 1925.00
DRAWN BY:
DRAWING SCALE:
PTN: 61721-83 FILE NO: 7-H4
CONSTRUCTION DOCUMENTS
JUNE 24, 2022

SHEET TITLE
TYPICAL METAL DECKING DETAILS

SHEET NUMBER
S-1.4

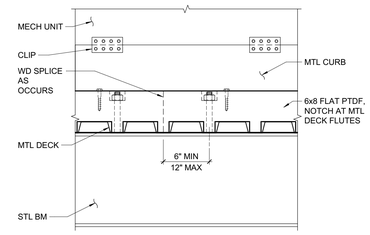

CURB PERPENDICULAR TO FLUTES

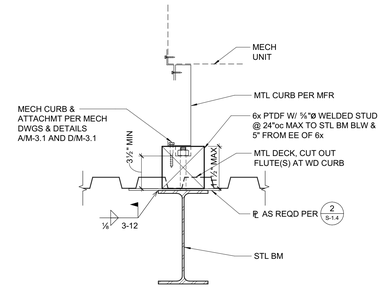

CURB PARALLEL TO FLUTES

1 MECHANICAL UNIT CURB SUPPORT
1 1/2" = 1'-0"

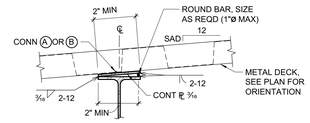

OPTION 2 (LOW SLOPE)

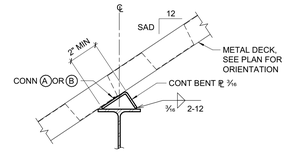

OPTION 1

SINGLE SLOPE

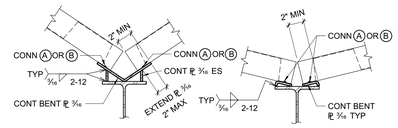

VALLEY VALLEY ALT

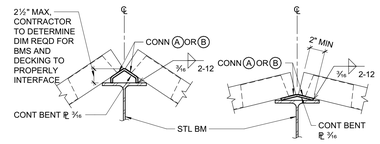

RIDGE/HIP RIDGE/HIP ALT

NOTE:
OMIT ADDITIONAL BEARING ℄ WHERE DECK SLOPE < ¼" PER 12"

2 TYPICAL SLOPED DECK SUPPORT
1 1/2" = 1'-0"

IDENTIFICATION STAMP
DIV. OF THE STATE ARCHITECT
APP: 01-119994 INC:
REVIEWED FOR
SS ☑ FLS ☑ ACS ☑
DATE: 08/16/2022

QUATTROCCHI KWOK ARCHITECTS
Main Office:
636 Fifth Street, Santa Rosa, CA 95404
East Bay Office:
55 Harrison Street, Suite 525,
Oakland, CA 94607
(707) 576-0829

ZFA STRUCTURAL ENGINEERS
1212 fourth street | suite z zfa.com
santa rosa ca 95404 707.526.0992
zfa job no. 21395
copyright © 2020

THIS DOCUMENT AND THE IDEAS INCORPORATED HEREIN, AS AN INSTRUMENT OF PROFESSIONAL SERVICE, IS THE PROPERTY OF THE ENGINEER AND IS NOT TO BE USED, IN WHOLE OR IN PART FOR ANY OTHER PROJECT WITHOUT THE PRIOR WRITTEN AUTHORIZATION OF THE ENGINEER.

REGISTERED PROFESSIONAL ENGINEER CHRIS S. WARD NO. S6395 STRUCTURAL STATE OF CALIFORNIA

LIBERTY HIGH SCHOOL

NEW CLASSROOM BUILDING

850 2nd STREET
BRENTWOOD, CA
94513

LIBERTY UNION HIGH SCHOOL DISTRICT

REVISIONS

DSA APP NO. 01-119994
ARCH PROJECT NO: 1925.00
DRAWN BY:
DRAWING SCALE:
PTN: 61721-83 FILE NO: 7-H4
CONSTRUCTION DOCUMENTS
JUNE 24, 2022

SHEET TITLE
TYPICAL METAL DECKING DETAILS

SHEET NUMBER
S-1.5

C:\revit_local\21395_Liberty HS_S21C_maksap.rvt
7/26/2022 10:07:10 AM

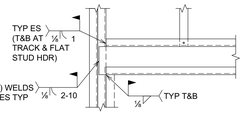

C WELDED CONNECTION

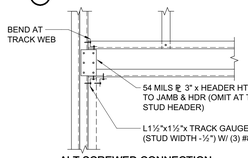

ALT SCREWED CONNECTION (INTERIOR NON-BRG ONLY)

B

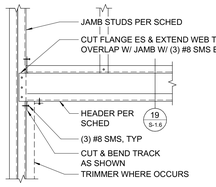

A SCREWED CONNECTION

16 TYPICAL HEADER CONNECTION

1" = 1'-0"

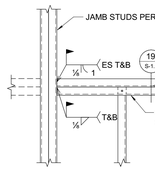

A WELDED CONNECTION

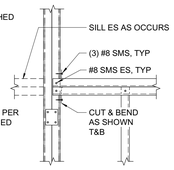

B ALT CONNECTION

17 TYPICAL SILL CONNECTION

1" = 1'-0"

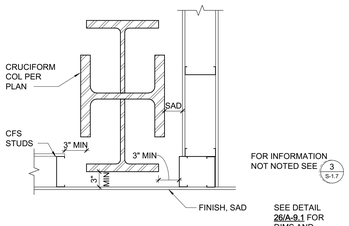

METAL STUD WALL AT CRUCIFORM COLUMN

18 TYPICAL WALL STUD PLAN VIEW AT CRUCIFORM COLUMN

1" = 1'-0"

WELDED CONNECTION

A JAMB STUD CONFIGURATIONS

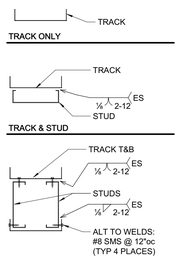

B HEADER CONFIGURATIONS

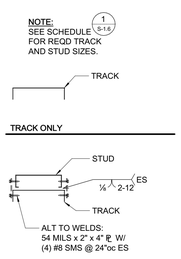

C SILL CONFIGURATIONS

19 TYPICAL NON-BEARING HEADERS AND SILLS

1 1/2" = 1'-0"

CLIP	CONN TO STUD	CONN TO ABV	MIN JAMB STUD THICKNESS	NOTES
SIMPSON SCW	(2) #14	(2) #12	43 MILS	
STL NETWORK SL CLIP	(3) #12	(3) #12	43 MILS	
4"x2"x97MILSx4" CLIP W/ 3"x2" VSH	(2) #12	(2) #12	43 MILS	

NOTE: PROVIDE CLIP ES JAMB STUD AT ALL OPENING GREATER THAN 4'-0"

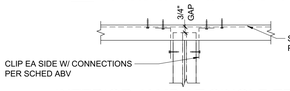

INTERIOR JAMB AT SINGLE TRACK

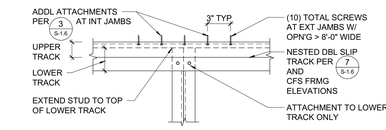

JAMB AT NESTED DOUBLE SLIP TRACKS

11 JAMB STUDS AT DEFLECTION TRACK

1 1/2" = 1'-0"

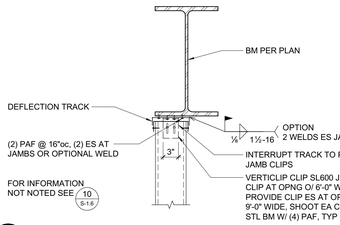

12 ATTACHMENT OF JAMB STUDS TO STEEL BEAM

1" = 1'-0"

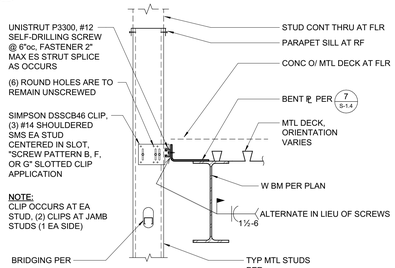

NOTE: SLIP CLIP IS TO ALLOW FOR VERTICAL MOVEMENT IN VERTICAL SLOTTED HOLES AND ALLOW FOR HORIZONTAL MOVEMENT PARALLEL TO THE UNISTRUT P3300.

13 EXTERIOR WALL - SLIP CLIP

1" = 1'-0"

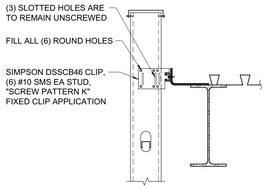

NOTE: FIXED CLIP IS TO ALLOW FOR HORIZONTAL MOVEMENT PARALLEL TO THE UNISTRUT P3300 EXCEPT WHERE DSHS CONNECTOR IS NOTED ON OTHER DETAILS.

14 EXTERIOR WALL - FIXED CLIP

1" = 1'-0"

FOR INFORMATION NOT NOTED SEE 13 S-1.6

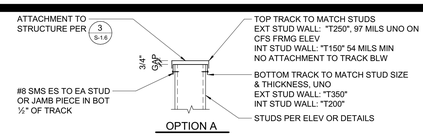

OPTION A

NOTES FOR ALL OPTIONS:
1. WALL COVERING SHALL NOT SCREW TO TOP TRACK.
2. WHERE SHTG DOES NOT EXTEND TO STRUCTURE/ TOP OF WALL, PROVIDE STRAP AND BLKG PER AT UNSHEATHED FACE AT 4'-0"oc MAX.

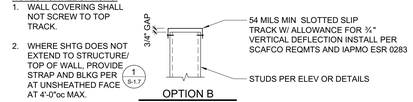

OPTION B
(INTERIOR WALLS ONLY)

7 NON-BEARING WALL DEFLECTION TRACK AT TOP

1" = 1'-0"

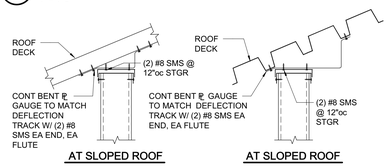

AT SLOPED ROOF AT SLOPED ROOF

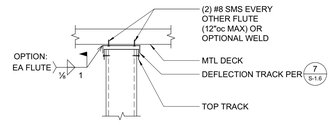

PERPENDICULAR TO FLUTES

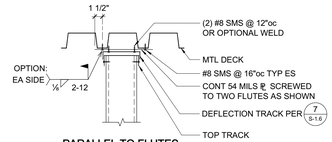

PARALLEL TO FLUTES

8 ATTACHMENT OF NON-BEARING STUDS TO METAL DECK

1" = 1'-0"

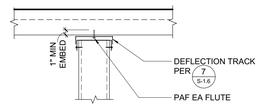

WALL PERPENDICULAR TO FLUTES

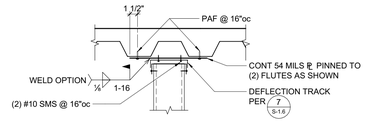

WALL ANGLED TO FLUTES

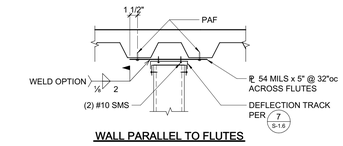

WALL PARALLEL TO FLUTES

9 ATTACHMENT OF NON-BEARING STUDS TO METAL DECK WITH CONCRETE FILL

1" = 1'-0"

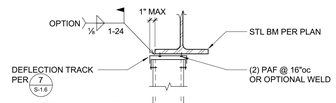

A WALL AT BM

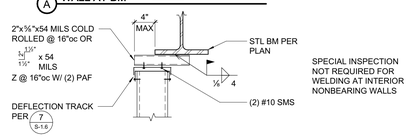

SPECIAL INSPECTION NOT REQUIRED FOR WELDING AT INTERIOR NONBEARING WALLS

B WALL OFFSET AT BM

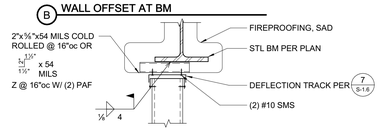

C WALL AT BM W/ FIREPROOFING

10 ATTACHMENT OF NON-BEARING STUDS TO STEEL BEAM

1" = 1'-0"

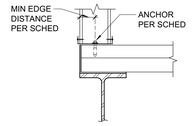

C CONC OVER METAL DECK

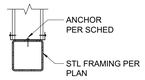

D STL FRAMING

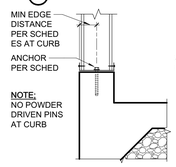

A AT CURB OR CONC WALL

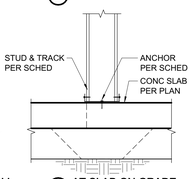

B AT SLAB ON GRADE

LOCATION	ANCHOR TYPE, DIAMETER AND SPACING				DETAIL
	SCREW ANCHOR	POWDER DRIVEN PINS	EXPANSION ANCHOR	CAST-IN-PLACE	
EXTERIOR WALL SLAB ON GRADE (H=15'-0" MAX)	½"Ø @ 32"oc	NOT PERMITTED	½"Ø @ 32"oc	½"Ø @ 48"oc	A
INTERIOR WALL SLAB ON GRADE	½"Ø @ 48"oc	0.157"Ø @ 16"oc	½"Ø @ 48"oc	½"Ø @ 48"oc	B
INTERIOR WALL SLAB ON MTL DECK	⅜"Ø @ 48"oc	0.157"Ø @ 16"oc	⅜"Ø @ 48"oc	N/A	C
EXTERIOR WALL SLAB ON MTL DECK (H=15'-0" MAX)	⅜"Ø @ 16"oc	NOT PERMITTED	⅜"Ø @ 16"oc	N/A	C
STL FRAMING (H=14'-0" MAX)	N/A	0.157"Ø @ 16"oc	N/A	N/A	D
MIN CONC EDGE DISTANCE	1¾"	3"	3"	3"	
REF DETAIL & NOTES	15 S-1.1	STAGGER PINS	17 S-1.1	NOTE #4	

NOTES:
1. PROVIDE (2) ANCHORS MIN PER TRACK SEGMENT.
2. FOUNDATION AND SLAB REINFORCING PER OTHER DETAILS.
3. CENTER FASTENERS W/ TRACK, UNO.
4. SEE PLAN AND SCHEDULE FOR ADDITIONAL ANCHORAGE REQUIREMENTS, AS OCCURS.
5. SPECIAL INSPECTION FOR POST-INSTALLED ANCHORS AT INTERIOR CFS WALLS IS NOT REQUIRED

4 TYPICAL BOTTOM TRACK ANCHORS AT CONCRETE

1" = 1'-0"

COLD FORMED FRAMING SCHEDULE				
LOCATION	MINIMUM MEMBER	MAX OPENING, b	CONFIG-URATION	REFERENCE DETAIL(S)
EXTERIOR STUDS	600S162-43 @ 16" oc	N/A		
EXTERIOR HEADERS	(2) 800S162-43 STUDS AND (2) 600T150-68 TRACKS	b ≤ 12'-0"		TYP FRMG ELEV 2 S-1.6; BUILT-UP MEMBERS & CONFIGURATION INFO 19 S-1.6
	(2) 600S162-43 STUDS AND (2) 600T150-43 TRACKS	b ≤ 8'-0"		
	600S162-43 STUD AND 600T150-43 TRACK	b ≤ 4'-0"		
EXTERIOR SILLS	600S162-54 STUD AND 600T150-68 TRACK	b ≤ 12'-0"		
	600S162-43 STUD AND 600T150-43 TRACK	b ≤ 8'-0"		
	600T150-43	b ≤ 4'-0"		
EXTERIOR JAMBS	(2) 600S162-97	b ≤ 12'-0"		
	(2) 600S162-68	b ≤ 10'-0"		
	(2) 600S162-43	b ≤ 4'-0"		
	AT CENTER JAMB FOR DOUBLE OPENING, SEE 12/S-1.7			
PARAPET SILLS	600S162-54 STUD AND 600T150-54 TRACK	N/A		19 S-1.6
INTERIOR STUDS	400S162-43 @ 16" oc	N/A		
	600S162-33 @ 16" oc			
INTERIOR STUDS W/ SHELVING OR EQUIPMENT ANCHORAGE	400S162-54 @ 16" oc	N/A		
	600S162-43 @ 16" oc			
INTERIOR HEADERS	(2) 600S162-33 STUDS AND (2) 400T150-43 TRACKS	b ≤ 12'-0"		TYP FRMG ELEV 3 S-1.6; BUILT-UP MEMBERS & CONFIGURATION INFO 19 S-1.6
	(2) 800S162-54 STUDS AND (2) 600T150-33 TRACKS			
	(2) 400S162-33 STUDS AND (2) 400T150-43 TRACKS	b ≤ 8'-0"		
	400T200-43 (OR 600T200-43)	b ≤ 4'-0"		
INTERIOR SILLS	400S162-43 STUD AND 400T150-43 TRACK (OR 600S162-33 AND 600T150-33)	b ≤ 14'-0"		
	400T150-43 (OR 600T150-43)	b ≤ 8'-0"		
INTERIOR JAMBS	(2) 400S162-43 (OR (2) 600S162-33)	b ≤ 12'-0"		
	400S162-43 (OR 600S162-33)	b ≤ 4'-0"		
CEILING JOISTS	400S162-33 @ 16" oc	10'-0"		4 S-1.7
	600S162-43 @ 16" oc	17'-0"		
CEILING HANGERS	400S162-43	h ≤ 6'-0"		
	400S162-43 & 400T150-43	h ≤ 8'-0"		

1. FOR JAMBS AND STUDS, MAXIMUM DISTANCE BETWEEN SUPPORTS (TRACKS, BYPASS CLIPS) SHALL BE 13'-6".
2. MAXIMUM PARAPET HEIGHT SHALL BE 4'-0".
3. TYPICAL TRACKS TO BE SAME GAUGE AS STUD, 43 MIL MIN (UNO). FLANGE TO BE 1¼" MIN.
4. AT EXTERIOR WALL W/ BUMP OUT BOTH MAIN WALL & FURRING WALL ARE EXTERIOR STUDS. PROVIDE BRIDGING @ 4'-0"oc MAX PER 1/S-1.7 AT BOTH WALLS.
5. A WALL W/ ANY PORTION HAVING EXTERIOR EXPOSURE SHALL BE FRAMED ENTIRELY AS AN EXTERIOR WALL.
6. MULTIPLE ADJACENT WINDOWS TO EACH HAVE INDIVIDUAL HEADERS AND FULL JAMB STUDS BETWEEN WINDOWS.
7. TYP WALL BRIDGING/BLKG PER 1/S-1.7 .
8. TYP STUD/JOIST TO TRACK PER 6/S-1.6
9. COORDINATE STUD DEPTH W/ ARCH DRAWINGS. INCREASE MIN HDR, SILL OR JAMB MEMBER DEPTHS AS REQD TO MATCH ACTUAL WALL STUD DEPTH.
10. "b" INDICATES OPENING WIDTH PER 2/S-1.6 OR 3/S-1.6
11. JAMBS TO CONTINUE TO FOUNDATION AT MULTI-STORY CONDITIONS UNO.
12. METAL STUD SECTIONS THAT ARE PART OF BUILT-UP HEADERS OR EXTERIOR JAMBS SHALL BE UNPUNCHED

1 SCHEDULE - COLD FORMED METAL FRAMING, UNO

3/4" = 1'-0"

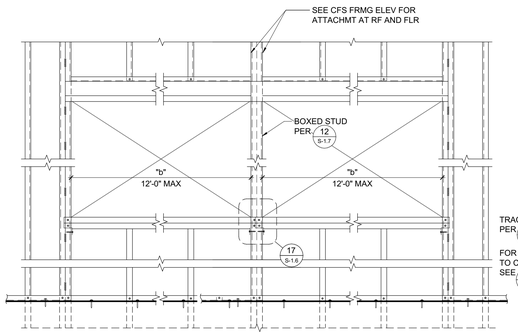

DOUBLE OPENING SINGLE OPENING

2 EXTERIOR NON-BEARING WALL (OPENING AS OCCURS)

1" = 1'-0"

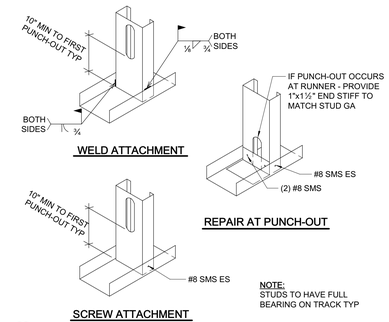

6 STUD OR JOIST TO TRACK

1" = 1'-0"

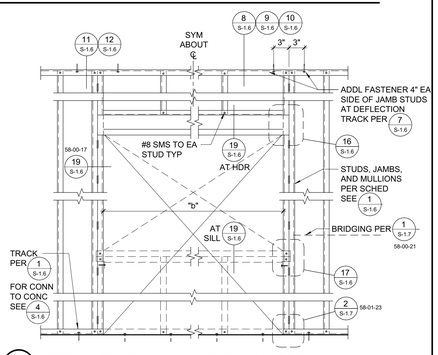

3 INTERIOR NON-BEARING WALL (OPENING AS OCCURS)

1" = 1'-0"

IDENTIFICATION STAMP
DIV. OF THE STATE ARCHITECT
APP: 01-119994 INC:
REVIEWED FOR
SS ☑ FLS ☑ ACS ☑
DATE: 08/16/2022

QUATTROCCHI KWOK ARCHITECTS

Main Office:
636 Fifth Street, Santa Rosa, CA 95404
East Bay Office:
55 Harrison Street, Suite 525,
Oakland, CA 94607
(707) 576-0829

ZFA STRUCTURAL ENGINEERS
1212 fourth street | suite z — zfa.com
santa rosa ca 95404 — 707.526.0992
zfa job no. 21395 — copyright © 2020

THIS DOCUMENT AND THE IDEAS INCORPORATED HEREIN, AS AN INSTRUMENT OF PROFESSIONAL SERVICE, IS THE PROPERTY OF THE ENGINEER AND IS NOT TO BE USED, IN WHOLE OR IN PART FOR ANY OTHER PROJECT WITHOUT THE PRIOR WRITTEN AUTHORIZATION OF THE ENGINEER.

REGISTERED PROFESSIONAL ENGINEER CHRIS S. WARD NO. 61721 STRUCTURAL STATE OF CALIFORNIA

LIBERTY HIGH SCHOOL

NEW CLASSROOM BUILDING

850 2nd STREET
BRENTWOOD, CA
94513

LIBERTY UNION HIGH SCHOOL DISTRICT

REVISIONS

DSA APP NO. 01-119994
ARCH PROJECT NO: 1925.00
DRAWN BY:
DRAWING SCALE:
PTN: 61721-83 FILE NO: 7-H4
CONSTRUCTION DOCUMENTS
JUNE 24, 2022

SHEET TITLE
TYPICAL CFS ELEVATION AND CONNECTION DETAILS

SHEET NUMBER
S-1.6

C:\revit_local\21395_Liberty HS_S21C_matesap.rvt
7/26/2022 10:07:14 AM

BOXED JAMB BETWEEN WINDOWS

12 JAMB BETWEEN OPENINGS
1" = 1'-0"

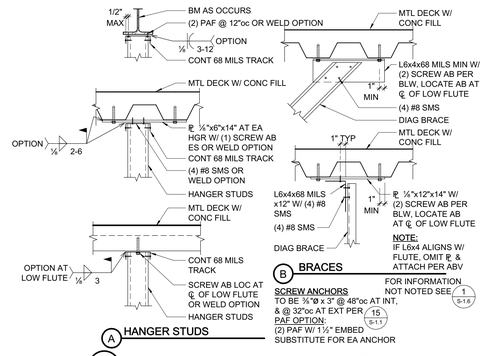

8 HANGERS & BRACES AT METAL DECK WITH CONC FILL
1" = 1'-0"
MAINLY FOR SCHOOLS

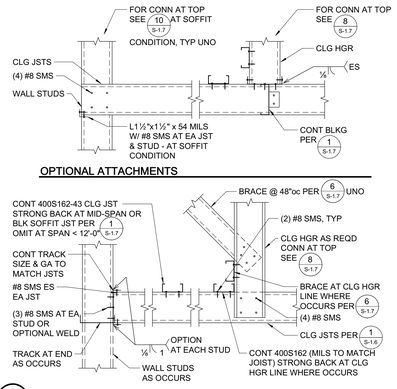

4 TYPICAL CEILING JOIST FRMG AT FULL HEIGHT METAL STUDS
1" = 1'-0"

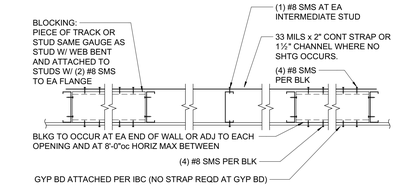

OPTION 2

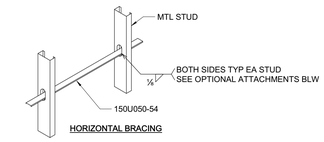

HORIZONTAL BRACING

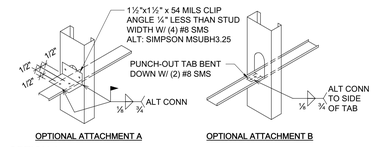

OPTIONAL ATTACHMENT A OPTIONAL ATTACHMENT B

OPTION 1

NOTES:
1. BRIDGING MAY BE PER OPTION 1 OR 2.
2. PROVIDE BRIDGING @ 4'-0"oc.
3. BRIDGING IS NOT REQUIRED WHERE PROPERLY ATTACHED SHEATHING (NOT GYP) OCCURS ON BOTH SIDES OF STUDS.
4. 8" MAX STUD DEPTH.
5. PROVIDE BLOCKING PER OPTION 2 AT LOCATIONS INDICATED ON DRAWINGS OR OTHER DETAILS

1 WALL BRIDGING/BLOCKING
1" = 1'-0"

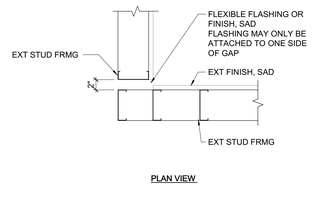

PLAN VIEW

13 JOINT AT EXTERIOR CFS CORNER WALL
1" = 1'-0"

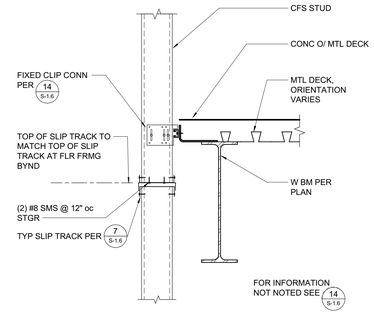

9 EXTERIOR WALL - SLIP JOINT BELOW SLAB
1" = 1'-0"

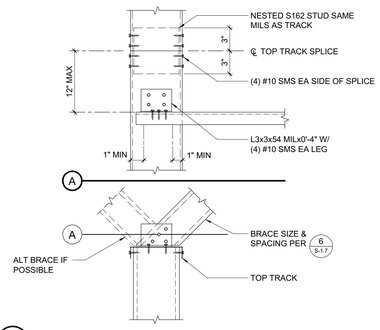

5 TYPICAL BRACE AT TOP OF PARTIAL HT WALL
1 1/2" = 1'-0"

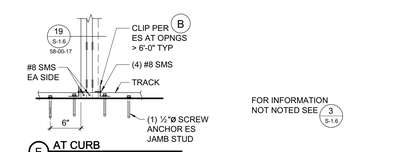

E AT CURB (EXTERIOR ONLY)

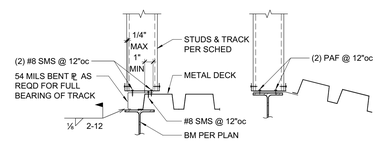

PARALLEL TO DECK

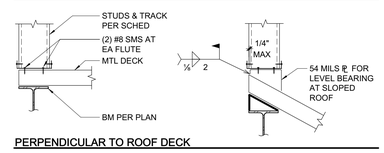

PERPENDICULAR TO ROOF DECK

10 ATTACHMENT OF STUDS TO METAL DECK
1" = 1'-0"

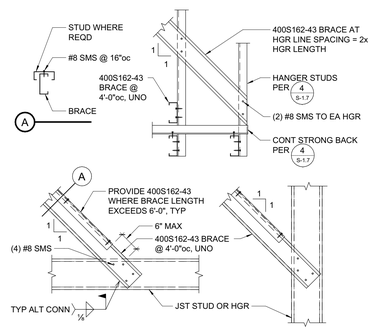

6 TYPICAL BRACE CONNECTIONS
1" = 1'-0"

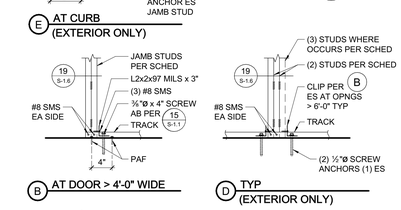

B AT DOOR > 4'-0" WIDE
D TYP (EXTERIOR ONLY)

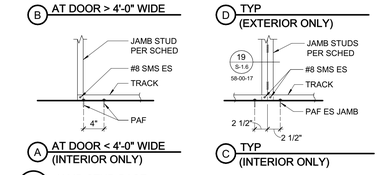

A AT DOOR < 4'-0" WIDE (INTERIOR ONLY)
C TYP (INTERIOR ONLY)

2 JAMB STUD BASE
1" = 1'-0"

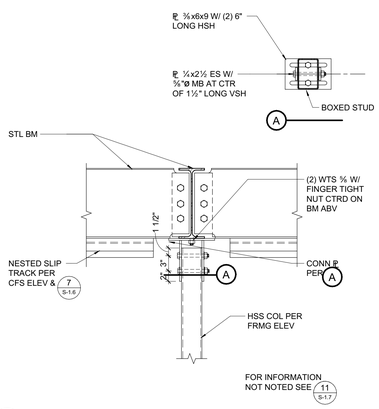

14 HSS COL THRU SLIP TRACK
1" = 1'-0"

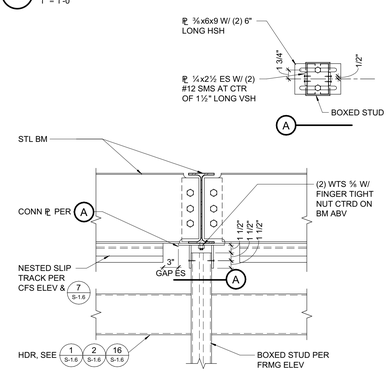

11 CFS JAMB THRU SLIP TRACK
1" = 1'-0"

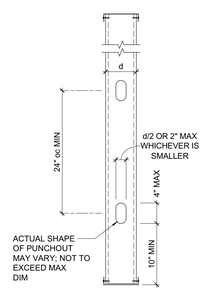

TYP STUD/TRACK PUNCHOUT

7 TYPICAL STUD PUNCHOUT
1" = 1'-0"

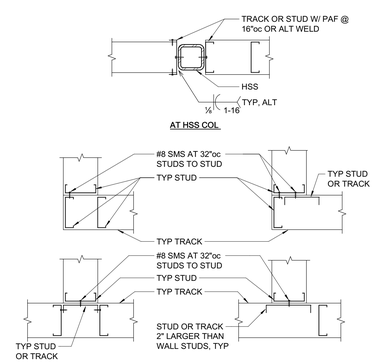

3 TYPICAL CORNERS AND INTERSECTIONS
1" = 1'-0"

IDENTIFICATION STAMP
DIV. OF THE STATE ARCHITECT
APP: 01-119994 INC:
REVIEWED FOR
SS ☑ FLS ☑ ACS ☑
DATE: 08/16/2022

QUATTROCCHI KWOK ARCHITECTS

Main Office:
636 Fifth Street, Santa Rosa, CA 95404
East Bay Office:
55 Harrison Street, Suite 525,
Oakland, CA 94607
(707) 576-0829

ZFA STRUCTURAL ENGINEERS
1212 fourth street | suite z — zfa.com
santa rosa ca 95404 — 707.526.0992
zfa job no. 21395 — copyright © 2020

THIS DOCUMENT AND THE IDEAS INCORPORATED HEREIN, AS AN INSTRUMENT OF PROFESSIONAL SERVICE, IS THE PROPERTY OF THE ENGINEER AND IS NOT TO BE USED, IN WHOLE OR IN PART, FOR ANY OTHER PROJECT WITHOUT THE PRIOR WRITTEN AUTHORIZATION OF THE ENGINEER.

REGISTERED PROFESSIONAL ENGINEER CHRIS S. HARRIS No. S5800 STRUCTURAL STATE OF CALIFORNIA

LIBERTY HIGH SCHOOL

NEW CLASSROOM BUILDING

850 2nd STREET
BRENTWOOD, CA
94513

LIBERTY UNION HIGH SCHOOL DISTRICT

REVISIONS

DSA APP NO. 01-119994
ARCH PROJECT NO: 1925.00
DRAWN BY:
DRAWING SCALE:
PTN: 61721-83 FILE NO: 7-H4
CONSTRUCTION DOCUMENTS
JUNE 24, 2022

SHEET TITLE
TYPICAL CFS DETAILS

SHEET NUMBER
S-1.7

C:\revit_local\21395_Liberty HS_S21C_matsap.rvt
7/26/2022 10:07:17 AM

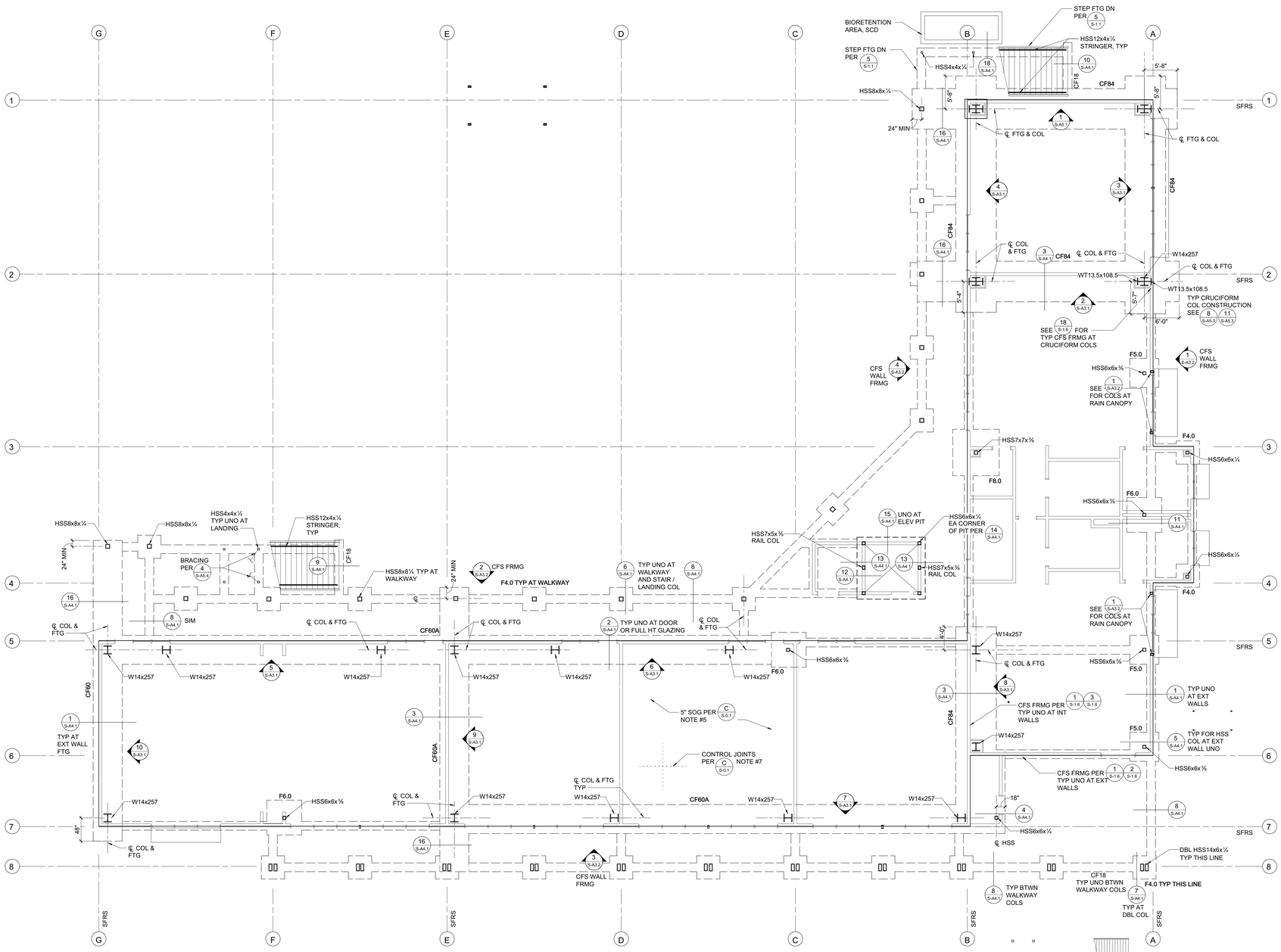

FOUNDATION PLAN - BLDG-A

1/8" = 1'-0"

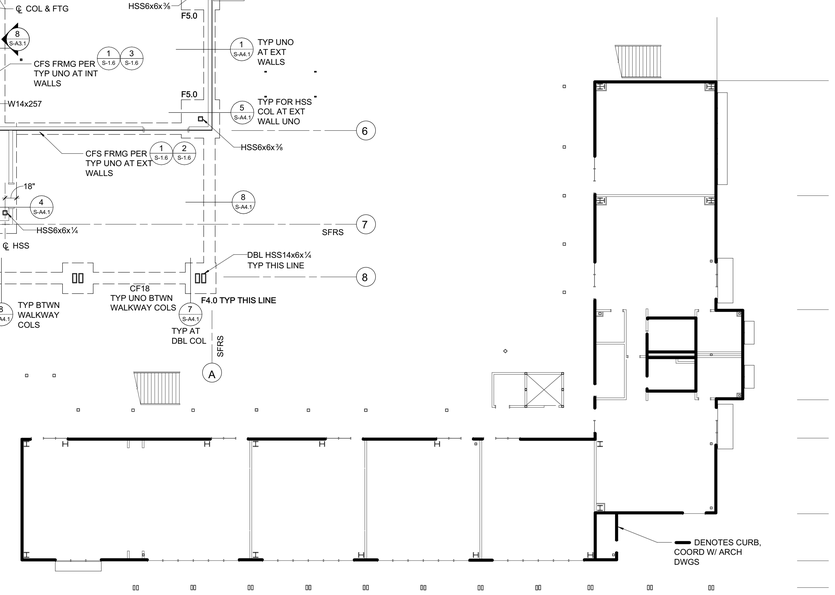

FIRST FLOOR CURB PLAN - BUILDING A

1/16" = 1'-0"

FOUNDATION PLAN NOTES:

1. REFER TO SHEETS S0.1, S1.1, S1.2, S1.3, S1.4 AND S4.1 FOR GENERAL NOTES AND TYPICAL DETAILS. THE FOLLOWING DETAIL REFERENCES ARE PROVIDED FOR THE CONTRACTOR'S CONVENIENCE ONLY. ALL GENERAL NOTES AND TYPICAL DETAILS NOTED ABOVE ARE APPLICABLE AND SHALL BE FOLLOWED.
2. COORDINATE ALL DIMENSIONS WITH ARCHITECTURAL DRAWINGS PRIOR TO CONSTRUCTION. NOTIFY ARCHITECT/ENGINEER OF ANY DISCREPANCIES.
3. SEE DETAILS OR CURB PLAN FOR CURB LOCATIONS. COORDINATE WITH ARCHITECTURAL DRAWINGS PRIOR TO CONSTRUCTION. NOTIFY ARCHITECT/ENGINEER OF ANY DISCREPANCIES.
4. PLUMBING AND ELECTRICAL CONDUIT AND GROUND STRAP SHALL NOT BE LAID WITHIN FOUNDATIONS. NO UTILITY PIPES OR CONDUITS SHALL BE LOCATED THRU COLUMN FOOTINGS OR FRAME FOOTINGS. NO VERTICAL OR HORIZONTAL PIPES OR CONDUITS SHALL BE LOCATED THROUGH STEEL FRAMES, STEEL COLUMNS, OR STEEL BASE PLATES. PROVIDE FURRING AND/OR THICKENED CONCRETE WHERE REQUIRED TO CLEAR UTILITY SYSTEMS. NOTIFY STRUCTURAL ENGINEER/ARCHITECT PRIOR TO ANY INSTALLATION NOT CONFORMING TO THESE DETAILS.

   PIPES THROUGH FOOTINGS SHALL BE PER 2/S-1.1 AND 3/S-1.1

   PIPES PARALLEL TO FOOTINGS SHALL BE PER 4/S-1.1

   PIPES AT SLAB ON GRADE SHALL BE PER 7/S-1.1
5. SEISMIC GAPS WHERE NOTED ARE DIMENSIONED CLEAR BETWEEN WALL FINISHES. WALLS AT SEISMIC SEPARATION JOINTS SHALL BE FRAMED AS EXTERIOR WALLS, UNO. THIS GAP TO BE MAINTAINED ENTIRELY CLEAR TO ALLOW FOR DIFFERENTIAL BUILDING MOVEMENT. NO PIPES, CONDUITS, ETCETERA SHALL BE LOCATED WITHIN THE GAP. PROVIDE FLEXIBLE COUPLINGS AT ALL UTILITIES CROSSING SEISMIC GAPS.

PLAN LEGEND

SYMBOL	REFERENCE DETAIL AND/OR NOTES	DESCRIPTION
		INDICATES CONCRETE WALL.
	1/S-1.6	INDICATES COLD FORMED STEEL WALL.
		INDICATES STEEL COLUMN.
DS	8/S-1.1	INDICATES DEPRESSED SLAB, SEE ARCHITECTURAL AND PLUMBING DRAWINGS FOR COMPLETE LOCATIONS, DEPTH AND SLOPE INFORMATION.
		INDICATES FOUNDATION.
CF24		INDICATES CONTINUOUS FOOTING SIZE AND REINFORCING PER SCHEDULE.
F2.0		INDICATES PAD FOOTING SIZE AND REINFORCING PER SCHEDULE.
88		INDICATES GRIDLINE AT FACE OF STUD.
SFRS	F/S-0.1	INDICATES LINE LOCATING STEEL ELEMENTS OF THE SEISMIC FORCE RESISTING SYSTEM.
	8/S-1.1	INDICATES STEP IN ELEVATION, SEE ARCHITECTURAL DRAWINGS.
1 S3.1		INDICATES ELEVATION.

PAD FOOTING SCHEDULE

MARK	SIZE	REINFORCING
F4.0	4'-0" SQ x 24" DEEP	(5) #5 T&B EW
F5.0	5'-0" SQ x 18" DEEP	(6) #5 T&B EW
F6.0	6'-0" SQ x 24" DEEP	(7) #6 T&B EW
F8.0	8'-0" SQ x 24" DEEP	(7) #7 T&B EW

CONTINUOUS FOOTING SCHEDULE

MARK	'b'	'd'	REINF 'a'	NOTES
CF18	18"	24"	(4) #5 T&B	PROVIDE #3 TIES @ 10"oc
CF30	30"	24"	(4) #6 T&B	PROVIDE #3 TIES @ 10"oc
CF60	60"	36"	(9) #8 T&B	PROVIDE #3 TIES @ 16"oc
CF60A	60"	36"	(14) #8 T&B	PROVIDE #3 TIES @ 16"oc
CF84	84"	36"	(14) #8 T&B	PROVIDE #3 TIES @ 16"oc

IDENTIFICATION STAMP
DIV. OF THE STATE ARCHITECT
APP: 01-119994 INC:
REVIEWED FOR
SS ☑ FLS ☑ ACS ☑
DATE: 08/16/2022

QUATTROCCHI KWOK ARCHITECTS
Main Office:
636 Fifth Street, Santa Rosa, CA 95404
East Bay Office:
55 Harrison Street, Suite 525,
Oakland, CA 94607
(707) 576-0829

ZFA STRUCTURAL ENGINEERS
1212 fourth street | suite z
santa rosa ca 95404
zfa job no. 21395
zfa.com
707.526.0992
copyright © 2020

THIS DOCUMENT AND THE IDEAS INCORPORATED HEREIN, AS AN INSTRUMENT OF PROFESSIONAL SERVICE, IS THE PROPERTY OF THE ENGINEER AND IS NOT TO BE USED, IN WHOLE OR IN PART FOR ANY OTHER PROJECT WITHOUT THE PRIOR WRITTEN AUTHORIZATION OF THE ENGINEER.

REGISTERED PROFESSIONAL ENGINEER CHRIS S. WARD STRUCTURAL STATE OF CALIFORNIA

LIBERTY HIGH SCHOOL

NEW CLASSROOM BUILDING

850 2nd STREET
BRENTWOOD, CA
94513

LIBERTY UNION HIGH SCHOOL DISTRICT

REVISIONS

DSA APP NO. 01-119994
ARCH PROJECT NO: 1925.00
DRAWN BY:
DRAWING SCALE:
PTN: 61721-83 FILE NO: 7-H4
CONSTRUCTION DOCUMENTS
JUNE 24, 2022

SHEET TITLE
FOUNDATION PLAN - BLDG-A

SHEET NUMBER
S-A2.1

C:\revit_local\21395_Liberty HS_S21C_matesap.rvt
7/26/2022 10:07:19 AM

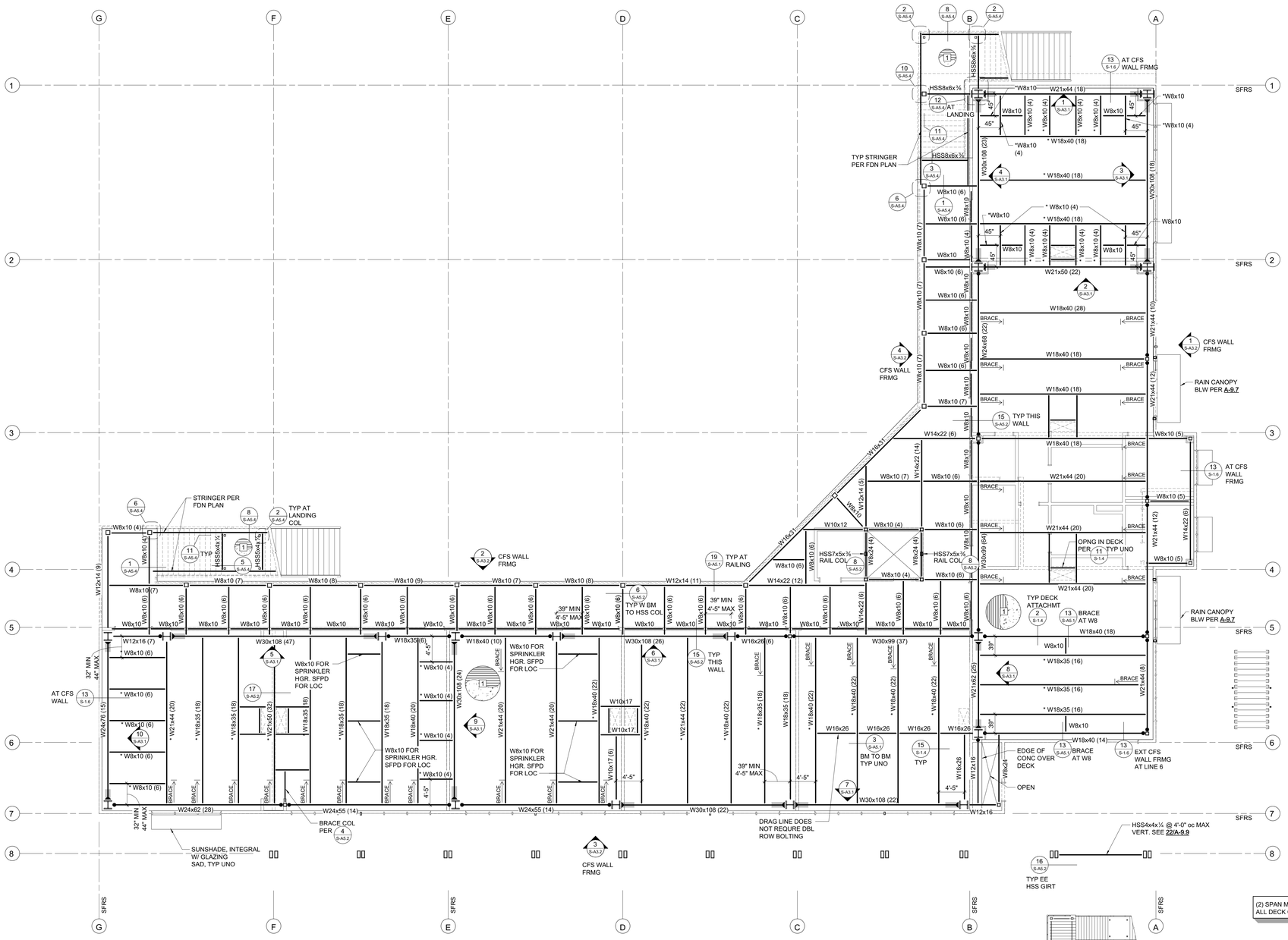

NORTH

SECOND FLOOR FRAMING PLAN - BLDG-A

1/8" = 1'-0"

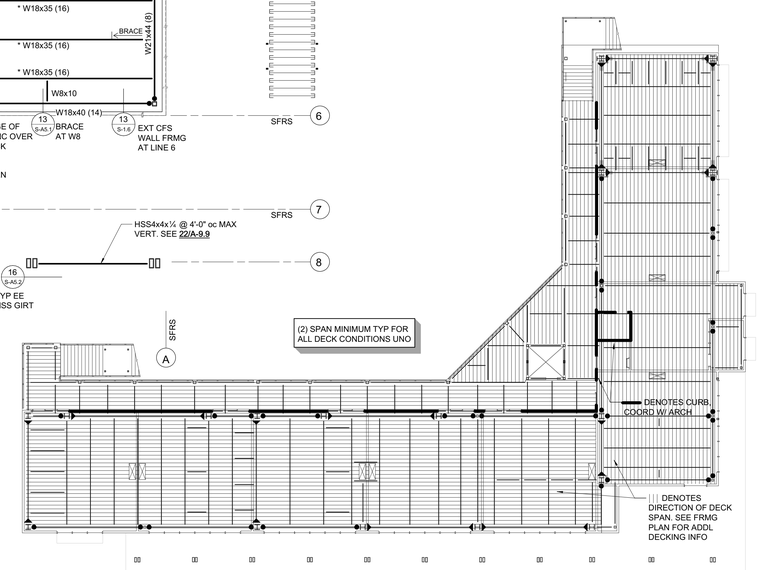

SECOND FLOOR CURB & DECK SPAN PLAN- BLDG-A

1/16" = 1'-0"

FRAMING PLAN NOTES:

1. REFER TO SHEETS S0.1, S1.1, S1.4, S1.5, S1.6, S5.1 AND S5.2 FOR GENERAL NOTES AND TYPICAL DETAILS. THE FOLLOWING DETAIL REFERENCES ARE PROVIDED FOR THE CONTRACTOR'S CONVENIENCE ONLY. ALL GENERAL NOTES AND TYPICAL DETAIL SHEETS NOTED ABOVE ARE APPLICABLE AND SHALL BE FOLLOWED.
2. COORDINATE ALL DIMENSIONS WITH ARCHITECTURAL DRAWINGS PRIOR TO CONSTRUCTION. NOTIFY ARCHITECT/ENGINEER OF ANY DISCREPANCIES.
3. NO VERTICAL OR HORIZONTAL PIPES OR CONDUITS SHALL BE LOCATED THROUGH STEEL FRAMING, COLUMNS, OR BASE PLATES. CONDUIT OR PLUMBING NOT ALLOWED WITHIN CONCRETE FILL ON METAL DECK. PROVIDE FURRING WHERE REQUIRED TO CLEAR UTILITY SYSTEMS. NOTIFY ARCHITECT/ENGINEER PRIOR TO ANY INSTALLATION NOT CONFORMING TO THESE RESTRICTIONS.
4. FIRE PROTECTION SYSTEM SUPPORTS TO BE LOCATED TO MAINTAIN A MAXIMUM OF (2) 500 LB MAX POINT LOADS WITH 15'-0" MINIMUM SEPARATION TO ANY STEEL BEAM. NO SUPPORTS TO BE HUNG FROM METAL DECKING.
5. SEE ARCHITECTURAL DRAWINGS FOR EDGE OF SLAB, FACE OF WALL, ETCETERA.
6. SEE ARCHITECTURAL DRAWINGS FOR TOP OF SLAB OR TO TOP OF STEEL ELEVATION.
7. BEAM CENTERLINES TO ALIGN WITH COLUMN CENTERLINES, UNLESS NOTED OTHERWISE.
8. BEAMS TO BE EQUALLY SPACED IN EACH BAY, UNLESS NOTED OTHERWISE.
9. SEISMIC GAPS WHERE NOTED ARE DIMENSIONED CLEAR BETWEEN WALL FINISHES. WALLS AT SEISMIC SEPARATION JOINTS SHALL BE FRAMED AS EXTERIOR WALLS, UNO. THIS GAP TO BE MAINTAINED ENTIRELY CLEAR TO ALLOW FOR DIFFERENTIAL BUILDING MOVEMENT. NO PIPES, CONDUITS, ETCETERA SHALL BE LOCATED WITHIN THE GAP. PROVIDE FLEXIBLE COUPLINGS AT ALL UTILITIES CROSSING SEISMIC GAPS.

PLAN LEGEND

SYMBOL	REFERENCE DETAIL AND/OR NOTES	DESCRIPTION
88		INDICATES GRIDLINE AT FACE OF STUD
SFRS	F/S-0.1	INDICATES LINE LOCATING STEEL ELEMENTS OF THE SEISMIC FORCE RESISTING SYSTEM.
		INDICATES STEEL COLUMN.
W16x26 (12) C=1"	15/S-1.4	INDICATES BEAM SIZE, (NUMBER OF WELDED STUDS) AND CAMBER. PROVIDE STUDS @ 24"oc MAX SPACING AT ALL BEAMS SUPPORTING CONCRETE FILL OVER METAL DECK, UNLESS NOTED OTHERWISE. ADD STUDS AS REQUIRED. (NS) INDICATES NO STUDS. WHERE NO CAMBER IS SPECIFIED FABRICATE BEAM WITH NATURAL CAMBER UP.
W16x26 *	9/S-A5.3	MOMENT FRAME BRACE BEAM. PROVIDE CONNECTION PER FROM BEAM TO ADJACENT MOMENT FRAME BEAM(S)
BRACE	13/S-A5.1	DIAGONAL BRACE CONNECTED TO BOTTOM FLANGE OF BEAM. HEAD OF ARROW INDICATES UPPER CONNECTION.
	15/S-A5.1 16/S-A5.1	INDICATES NON-FRAME MOMENT RESISTING CONNECTION.
	1/S-A5.3	INDICATES FRAME MOMENT RESISTING CONNECTION. GRAY SHADING INDICATES PROTECTED ZONE. NO PENETRATIONS OR CONNECTIONS TO BEAM PERMITTED IN PROTECTED ZONE.
		INDICATES SEISMIC FORCE RESISTING SYSTEM COLLECTOR CONNECTION. PROVIDE DOUBLE ROW OF BOLTS AT CONNECTION PER DETAILS.
1 / 1	1/S-1.4	INDICATES METAL DECK (WITH CONCRETE FILL AS OCCURS) AND DIRECTION OF DECK SPAN.
	1/S-1.6	INDICATES COLD FORMED STEEL WALL.
MU 1,000#		INDICATES APPROXIMATE LOCATION, SIZE AND MAXIMUM WEIGHT OF MECHANICAL UNIT. SEE MECHANICAL DRAWINGS FOR ANCHORAGE AND ADDITIONAL INFORMATION.
1 / S3.1		INDICATES ELEVATION.

IDENTIFICATION STAMP
DIV. OF THE STATE ARCHITECT
APP: 01-119994 INC:
REVIEWED FOR
SS ☑ FLS ☑ ACS ☑
DATE: 08/16/2022

QUATTROCCHI KWOK ARCHITECTS

Main Office:
636 Fifth Street, Santa Rosa, CA 95404
East Bay Office:
55 Harrison Street, Suite 525,
Oakland, CA 94607
(707) 576-0829

ZFA STRUCTURAL ENGINEERS
1212 fourth street | suite z — zfa.com
santa rosa ca 95404 — 707.526.0992
zfa job no. 21395

copyright © 2020

THIS DOCUMENT AND THE IDEAS INCORPORATED HEREIN, AS AN INSTRUMENT OF PROFESSIONAL SERVICE, IS THE PROPERTY OF THE ENGINEER AND IS NOT TO BE USED, IN WHOLE OR IN PART FOR ANY OTHER PROJECT WITHOUT THE PRIOR WRITTEN AUTHORIZATION OF THE ENGINEER.

REGISTERED PROFESSIONAL ENGINEER — CHRIS S. WARD — STRUCTURAL — STATE OF CALIFORNIA

LIBERTY HIGH SCHOOL

NEW CLASSROOM BUILDING

850 2nd STREET
BRENTWOOD, CA
94513

LIBERTY UNION HIGH SCHOOL DISTRICT

REVISIONS

DSA APP NO. 01-119994
ARCH PROJECT NO: 1925.00
DRAWN BY:
DRAWING SCALE:
PTN: 61721-83 FILE NO: 7-H4
CONSTRUCTION DOCUMENTS
JUNE 24, 2022

SHEET TITLE
SECOND FLOOR FRAMING PLAN - BLDG A

SHEET NUMBER
S-A2.2

C:\revit_local\21395_Liberty HS_S21C_matesap.rvt
7/26/2022 10:07:22 AM

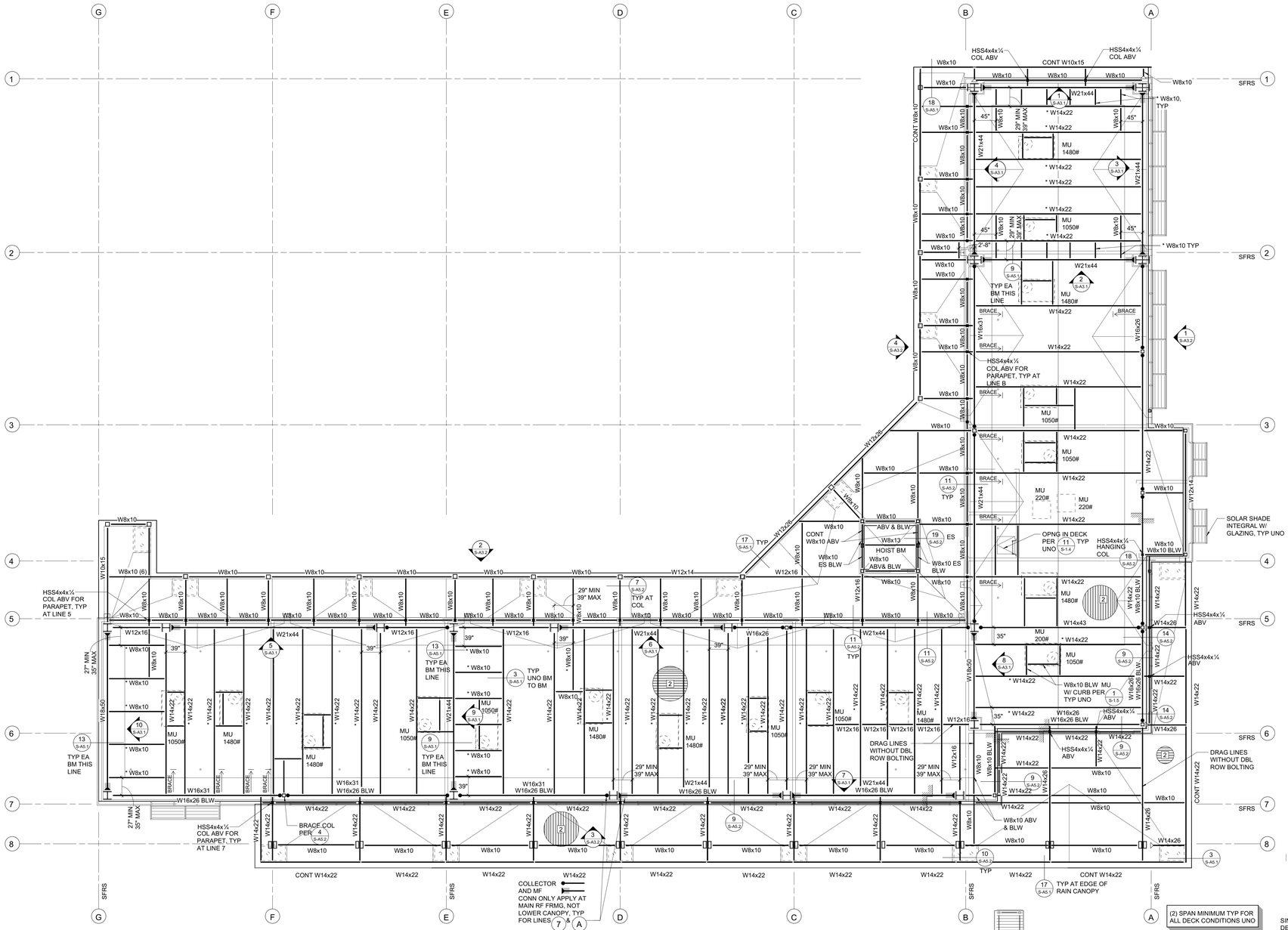

ROOF FRAMING PLAN - BLDG-A

1/8" = 1'-0"

ROOF DECK SPAN PLAN - BUILDING A

1/16" = 1'-0"

FRAMING PLAN NOTES:

1. REFER TO SHEETS S0.1, S1.1, S1.4, S1.5, S1.6, S5.1 AND S5.2 FOR GENERAL NOTES AND TYPICAL DETAILS. THE FOLLOWING DETAIL REFERENCES ARE PROVIDED FOR THE CONTRACTOR'S CONVENIENCE ONLY. ALL GENERAL NOTES AND TYPICAL DETAIL SHEETS NOTED ABOVE ARE APPLICABLE AND SHALL BE FOLLOWED.
2. COORDINATE ALL DIMENSIONS WITH ARCHITECTURAL DRAWINGS PRIOR TO CONSTRUCTION. NOTIFY ARCHITECT/ENGINEER OF ANY DISCREPANCIES.
3. NO VERTICAL OR HORIZONTAL PIPES OR CONDUITS SHALL BE LOCATED THROUGH STEEL FRAMING, COLUMNS, OR BASE PLATES. CONDUIT OR PLUMBING NOT ALLOWED WITHIN CONCRETE FILL ON METAL DECK. PROVIDE FURRING WHERE REQUIRED TO CLEAR UTILITY SYSTEMS. NOTIFY ARCHITECT/ENGINEER PRIOR TO ANY INSTALLATION NOT CONFORMING TO THESE RESTRICTIONS.
4. FIRE PROTECTION SYSTEM SUPPORTS TO BE LOCATED TO MAINTAIN A MAXIMUM OF (2) 500 LB MAX POINT LOADS WITH 15'-0" MINIMUM SEPARATION TO ANY STEEL BEAM. NO SUPPORTS TO BE HUNG FROM METAL DECKING.
5. SEE ARCHITECTURAL DRAWINGS FOR EDGE OF SLAB, FACE OF WALL, ETCETERA.
6. SEE ARCHITECTURAL DRAWINGS FOR TOP OF SLAB OR TO TOP OF STEEL ELEVATION.
7. BEAM CENTERLINES TO ALIGN WITH COLUMN CENTERLINES, UNLESS NOTED OTHERWISE.
8. BEAMS TO BE EQUALLY SPACED IN EACH BAY, UNLESS NOTED OTHERWISE.
9. SEISMIC GAPS WHERE NOTED ARE DIMENSIONED CLEAR BETWEEN WALL FINISHES. WALLS AT SEISMIC SEPARATION JOINTS SHALL BE FRAMED AS EXTERIOR WALLS, UNO. THIS GAP TO BE MAINTAINED ENTIRELY CLEAR TO ALLOW FOR DIFFERENTIAL BUILDING MOVEMENT. NO PIPES, CONDUITS, ETCETERA SHALL BE LOCATED WITHIN THE GAP. PROVIDE FLEXIBLE COUPLINGS AT ALL UTILITIES CROSSING SEISMIC GAPS.

PLAN LEGEND

SYMBOL	REFERENCE DETAIL AND/OR NOTES	DESCRIPTION
88		INDICATES GRIDLINE AT FACE OF STUD
SFRS	F/S-0.1	INDICATES LINE LOCATING STEEL ELEMENTS OF THE SEISMIC FORCE RESISTING SYSTEM.
		INDICATES STEEL COLUMN.
W16x26 (12) C=1"	15/S-1.4	INDICATES BEAM SIZE, (NUMBER OF WELDED STUDS) AND CAMBER. PROVIDE STUDS @ 24"oc MAX SPACING AT ALL BEAMS SUPPORTING CONCRETE FILL OVER METAL DECK, UNLESS NOTED OTHERWISE. ADD STUDS AS REQUIRED. (NS) INDICATES NO STUDS. WHERE NO CAMBER IS SPECIFIED FABRICATE BEAM WITH NATURAL CAMBER UP.
W16x26 *	9/S-A5.3	MOMENT FRAME BRACE BEAM. PROVIDE CONNECTION PER FROM BEAM TO ADJACENT MOMENT FRAME BEAM(S)
BRACE	13/S-A5.1	DIAGONAL BRACE CONNECTED TO BOTTOM FLANGE OF BEAM. HEAD OF ARROW INDICATES UPPER CONNECTION.
	12/S-A5.2	INDICATES "T" PLATE BEAM CONNECTION TO COLUMN.
	15/S-A5.1 16/S-A5.1	INDICATES NON-FRAME MOMENT RESISTING CONNECTION.
	1/S-A5.3	INDICATES FRAME MOMENT RESISTING CONNECTION. GRAY SHADING INDICATES PROTECTED ZONE. NO PENETRATIONS OR CONNECTIONS TO BEAM PERMITTED IN PROTECTED ZONE.
		INDICATES SEISMIC FORCE RESISTING SYSTEM COLLECTOR CONNECTION. PROVIDE DOUBLE ROW OF BOLTS AT CONNECTION PER DETAILS.
1 1.1	1/S-1.4	INDICATES METAL DECK (WITH CONCRETE FILL AS OCCURS) AND DIRECTION OF DECK SPAN.
	1/S-1.6	INDICATES COLD FORMED STEEL WALL.
MU 1,000#		INDICATES APPROXIMATE LOCATION, SIZE AND MAXIMUM WEIGHT OF MECHANICAL UNIT. SEE MECHANICAL DRAWINGS FOR ANCHORAGE AND ADDITIONAL INFORMATION.
1 S3.1		INDICATES ELEVATION.
		INDICATES STEP IN ELEVATION, SEE ARCHITECTURAL DRAWINGS.

IDENTIFICATION STAMP
DIV. OF THE STATE ARCHITECT
APP: 01-119994 INC:
REVIEWED FOR
SS ☑ FLS ☑ ACS ☑
DATE: 08/16/2022

QUATTROCCHI KWOK ARCHITECTS

Main Office:
636 Fifth Street, Santa Rosa, CA 95404
East Bay Office:
55 Harrison Street, Suite 525,
Oakland, CA 94607
(707) 576-0829

ZFA STRUCTURAL ENGINEERS
1212 fourth street | suite z — zfa.com
santa rosa ca 95404 — 707.526.0992
zfa job no. 21395

copyright © 2020

THIS DOCUMENT AND THE IDEAS INCORPORATED HEREIN, AS AN INSTRUMENT OF PROFESSIONAL SERVICE, IS THE PROPERTY OF THE ENGINEER AND IS NOT TO BE USED, IN WHOLE OR IN PART FOR ANY OTHER PROJECT WITHOUT THE PRIOR WRITTEN AUTHORIZATION OF THE ENGINEER.

REGISTERED PROFESSIONAL ENGINEER — CHARLES S. WARD — STRUCTURAL — STATE OF CALIFORNIA

LIBERTY HIGH SCHOOL

NEW CLASSROOM BUILDING

850 2nd STREET
BRENTWOOD, CA
94513

LIBERTY UNION HIGH SCHOOL DISTRICT

REVISIONS

DSA APP NO. 01-119994
ARCH PROJECT NO: 1925.00
DRAWN BY:
DRAWING SCALE:
PTN: 61721-83 FILE NO: 7-H4
CONSTRUCTION DOCUMENTS
JUNE 24, 2022

SHEET TITLE
ROOF FRAMING PLAN - BLDG-A

SHEET NUMBER
S-A2.3

C:\revit_local\21395_Liberty HS_S21C_mattesp.rvt
7/26/2022 10:07:23 AM

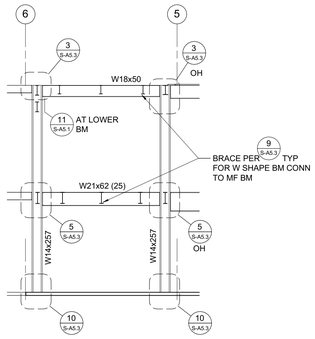

8 LINE B
1/8" = 1'-0"

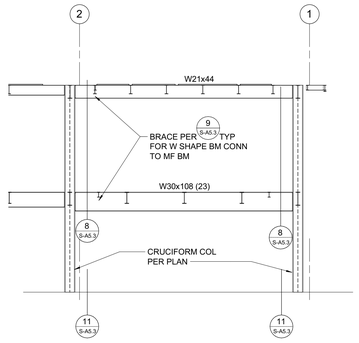

4 LINE B
1/8" = 1'-0"

FRAME ELEVATION NOTES:

1. ELEVATIONS ARE SCHEMATIC. SEE PLANS FOR ADDITIONAL INFORMATION.
2. SEE PLANS FOR ALL COLUMN AND BEAM SIZES.
3. SEE SHEET S5.3 FOR MOMENT FRAME DETAILS.
4. SEE SHEET S1.6 & S1.7 FOR METAL STUD FRAMING. SAD AND SMD FOR WALL OPENINGS.
5. SAD FOR FRAMING HEIGHTS, BEAM SLOPES AND ALL DIMENSIONS.
6. NO COLUMN SPLICES PERMITTED EXCEPT WHERE NOTED.
7. ALL CONNECTIONS INDICATED ON ELEVATIONS ARE PART OF THE SFRS, ALL WELDS ARE DEMAND CRITICAL.
8. [X] DENOTES DOUBLER PLATE PER 6 S-A5.3

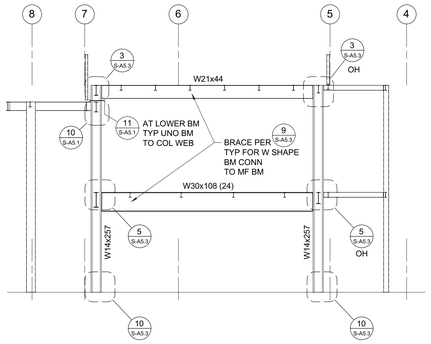

9 LINE E
1/8" = 1'-0"

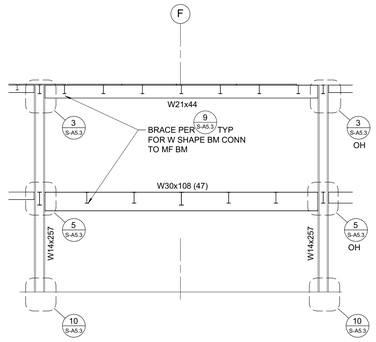

5 LINE 5
1/8" = 1'-0"

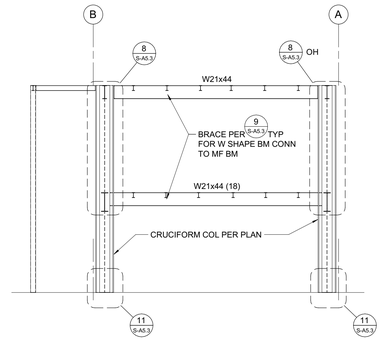

1 LINE 1
1/8" = 1'-0"

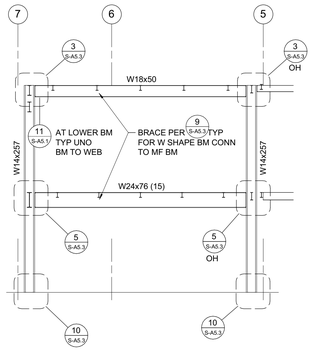

10 LINE G
1/8" = 1'-0"

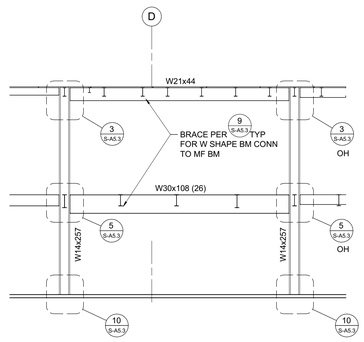

6 LINE 5
1/8" = 1'-0"

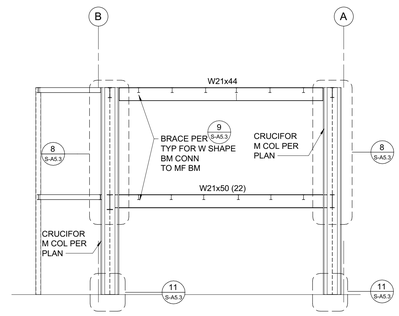

2 LINE 2
1/8" = 1'-0"

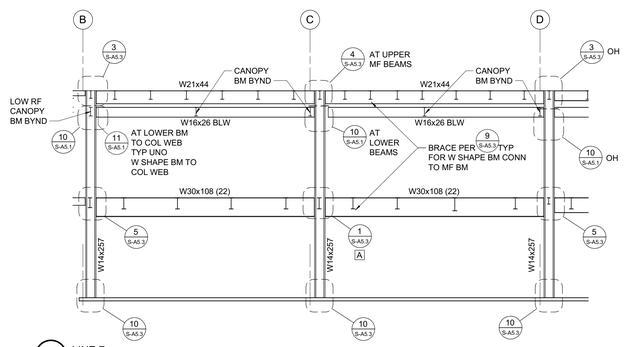

7 LINE 7
1/8" = 1'-0"

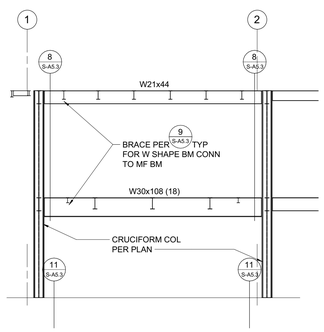

3 LINE A
1/8" = 1'-0"

IDENTIFICATION STAMP
DIV. OF THE STATE ARCHITECT
APP: 01-119994 INC:
REVIEWED FOR
SS ☑ FLS ☑ ACS ☑
DATE: 08/16/2022

QUATTROCCHI KWOK ARCHITECTS

Main Office:
636 Fifth Street, Santa Rosa, CA 95404
East Bay Office:
55 Harrison Street, Suite 525,
Oakland, CA 94607
(707) 576-0829

ZFA STRUCTURAL ENGINEERS
1212 fourth street | suite z — zfa.com
santa rosa ca 95404 — 707.526.0992
zfa job no. 21395

copyright © 2020

THIS DOCUMENT AND THE IDEAS INCORPORATED HEREIN, AS AN INSTRUMENT OF PROFESSIONAL SERVICE, IS THE PROPERTY OF THE ENGINEER AND IS NOT TO BE USED, IN WHOLE OR IN PART FOR ANY OTHER PROJECT WITHOUT THE PRIOR WRITTEN AUTHORIZATION OF THE ENGINEER.

REGISTERED PROFESSIONAL ENGINEER
CHRIS S. WARD
No. 5 8 6 9
STRUCTURAL
STATE OF CALIFORNIA

LIBERTY HIGH SCHOOL

NEW CLASSROOM BUILDING

850 2nd STREET
BRENTWOOD, CA
94513

LIBERTY UNION
HIGH SCHOOL
DISTRICT

REVISIONS

DSA APP NO. 01-119994
ARCH PROJECT NO: 1925.00
DRAWN BY:
DRAWING SCALE:
PTN: 61721-83 FILE NO: 7-H4
CONSTRUCTION DOCUMENTS
JUNE 24, 2022

SHEET TITLE

FRAMING ELEVATIONS

SHEET NUMBER

S-A3.1

C:\revit_local\21395_Liberty HS_S21C_matesap.rvt
7/26/2022 10:07:26 AM

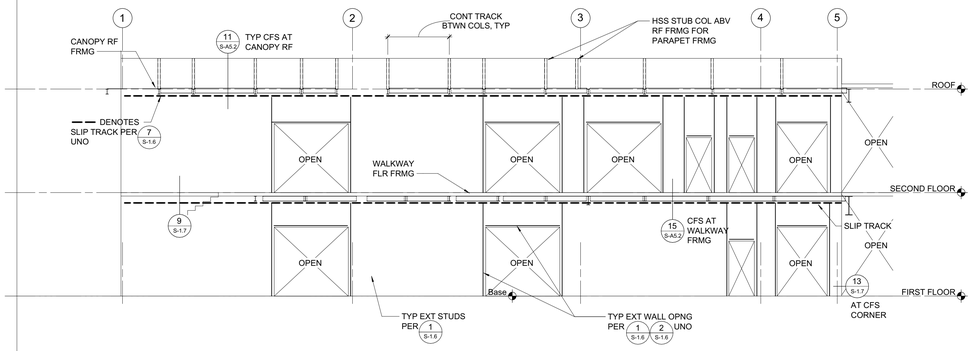

4 CFS FRAMING - LINE B
1/8" = 1'-0"

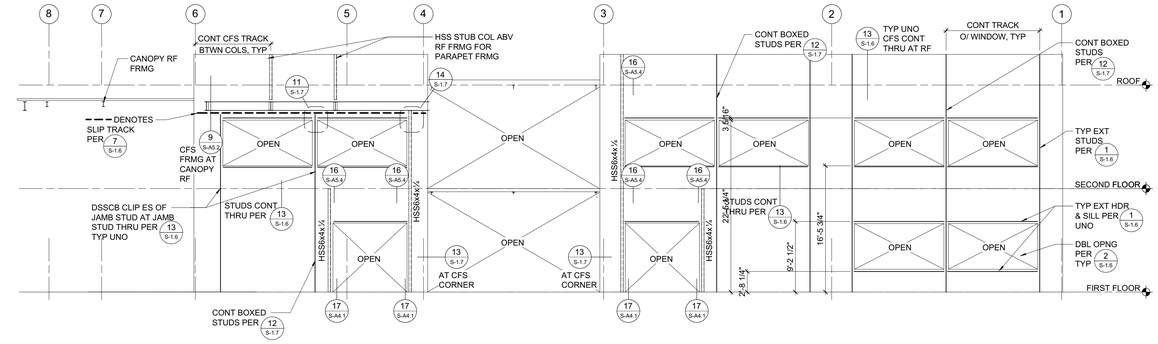

1 CFS FRAMING - LINE A
1/8" = 1'-0"

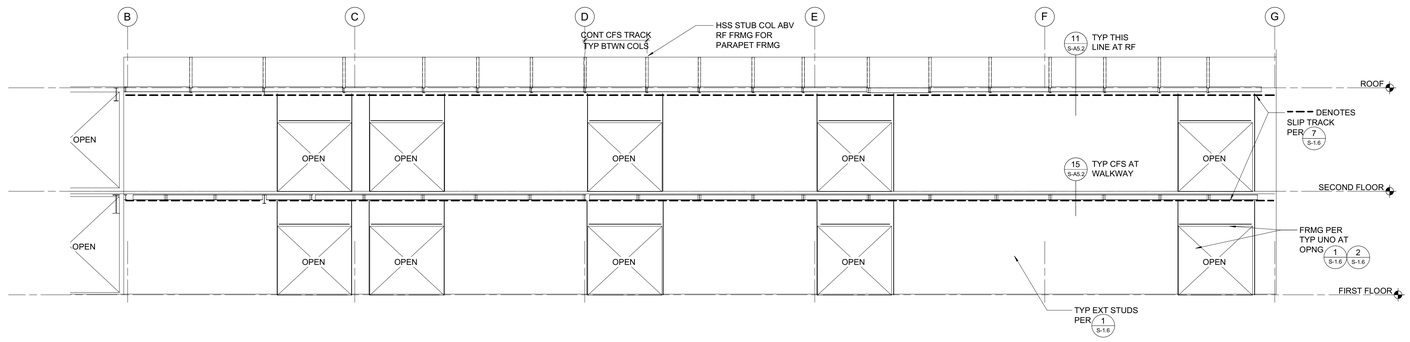

2 CFS FRAMING - LINE 5
1/8" = 1'-0"

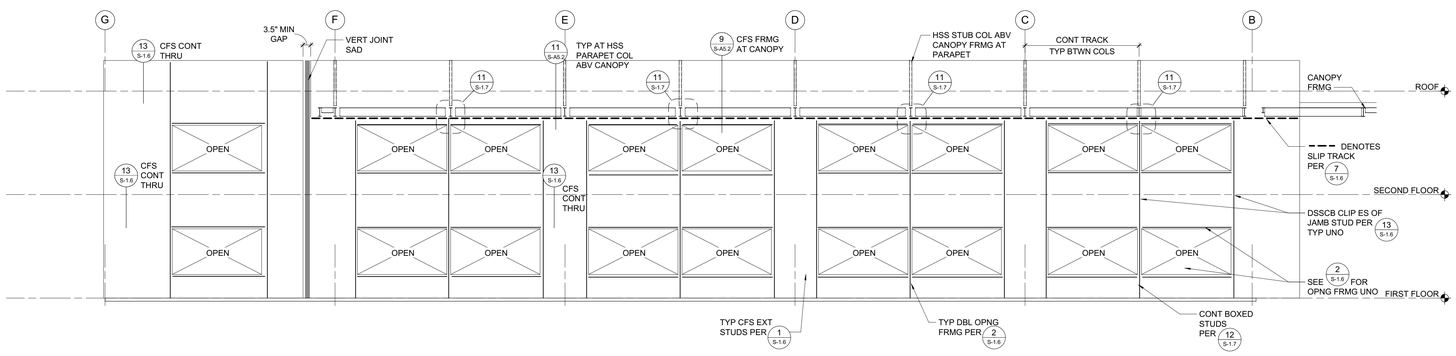

3 CFS FRAMING - LINE 7
1/8" = 1'-0"

C:\revit_local\21395_Liberty HS_S21C_matsap.rvt

7/26/2022 10:07:29 AM

IDENTIFICATION STAMP
DIV. OF THE STATE ARCHITECT
APP: 01-119994 INC:
REVIEWED FOR
SS ☑ FLS ☑ ACS ☑
DATE: 08/16/2022

QUATTROCCHI KWOK ARCHITECTS

Main Office:
636 Fifth Street, Santa Rosa, CA 95404
East Bay Office:
55 Harrison Street, Suite 525,
Oakland, CA 94607
(707) 576-0829

ZFA STRUCTURAL ENGINEERS
1212 fourth street | suite z — zfa.com
santa rosa ca 95404 — 707.526.0992
zfa job no. 21395 — copyright © 2020

THIS DOCUMENT AND THE IDEAS INCORPORATED HEREIN, AS AN INSTRUMENT OF PROFESSIONAL SERVICE, IS THE PROPERTY OF THE ENGINEER AND IS NOT TO BE USED, IN WHOLE OR IN PART FOR ANY OTHER PROJECT WITHOUT THE PRIOR WRITTEN AUTHORIZATION OF THE ENGINEER.

REGISTERED PROFESSIONAL ENGINEER CHRIS S. WARD No. S 5852 STRUCTURAL STATE OF CALIFORNIA

LIBERTY HIGH SCHOOL

NEW CLASSROOM BUILDING

850 2nd STREET
BRENTWOOD, CA
94513

LIBERTY UNION HIGH SCHOOL DISTRICT

REVISIONS

DSA APP NO. 01-119994
ARCH PROJECT NO: 1925.00
DRAWN BY:
DRAWING SCALE:
PTN: 61721-83 — FILE NO: 7-H4
CONSTRUCTION DOCUMENTS
JUNE 24, 2022

SHEET TITLE

CFS ELEVATIONS - BLDG A

SHEET NUMBER

S-A3.2

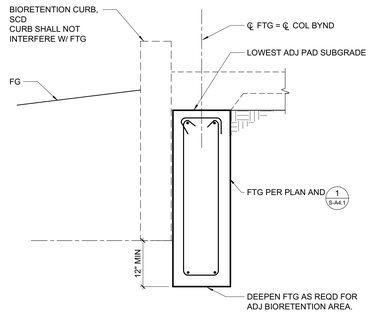

18 EXTERIOR FOOTING ADJACENT TO BIORETENTION CURB
3/4" = 1'-0"

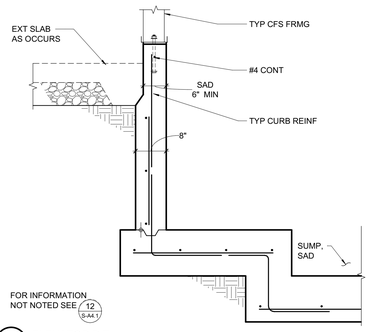

15 ELEVATOR PIT
3/4" = 1'-0"

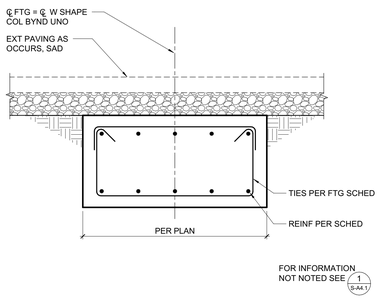

16 GRADE BEAM
3/4" = 1'-0"

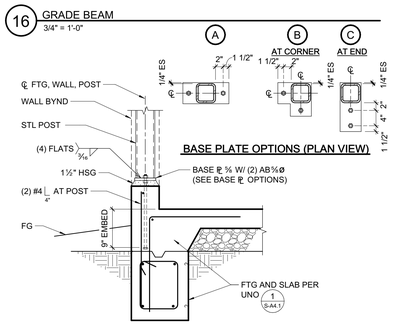

17 HSS COLUMN AT CURB
3/4" = 1'-0"

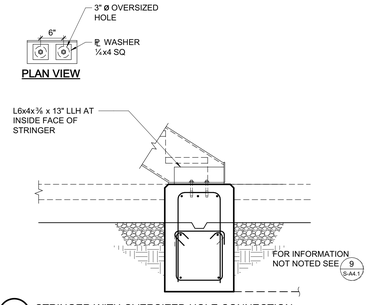

10 STRINGER WITH OVERSIZED HOLE CONNECTION
3/4" = 1'-0"

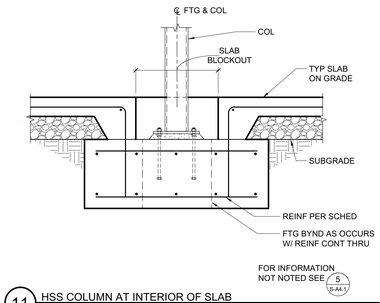

11 HSS COLUMN AT INTERIOR OF SLAB
3/4" = 1'-0"

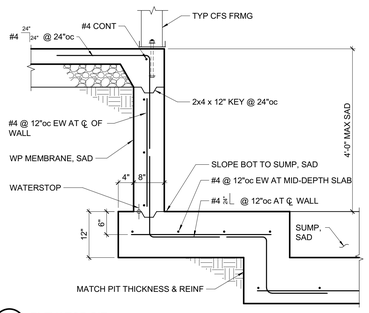

12 ELEVATOR PIT
3/4" = 1'-0"

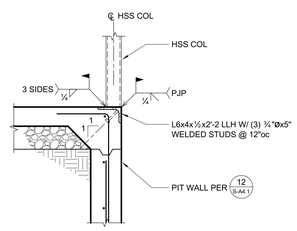

13 ELEVATOR RAIL SUPPORT AT PIT
3/4" = 1'-0"

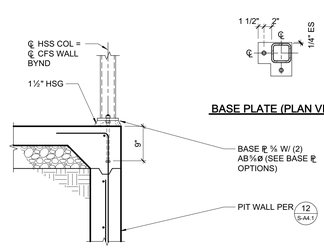

14 HSS COLUMN AT ELEVATOR PIT WALL
3/4" = 1'-0"

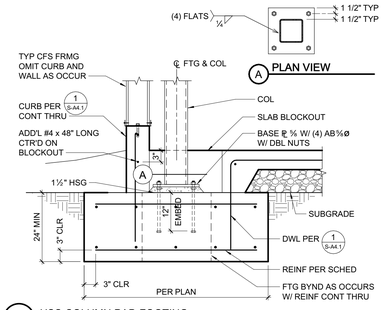

5 HSS COLUMN PAD FOOTING
3/4" = 1'-0"

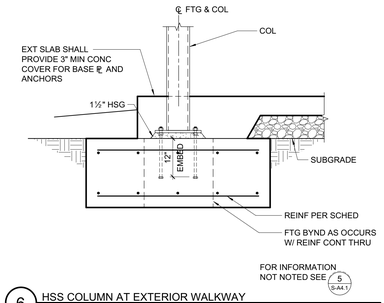

6 HSS COLUMN AT EXTERIOR WALKWAY
3/4" = 1'-0"

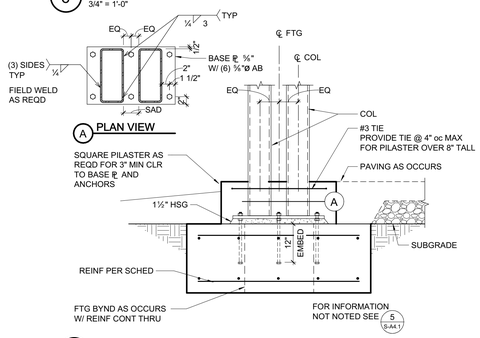

7 DOUBLE HSS COLUMN BASE PLATE
3/4" = 1'-0"

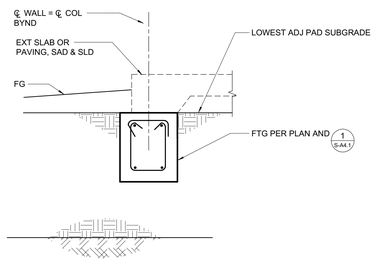

8 TYPICAL EXTERIOR FOOTING
3/4" = 1'-0"

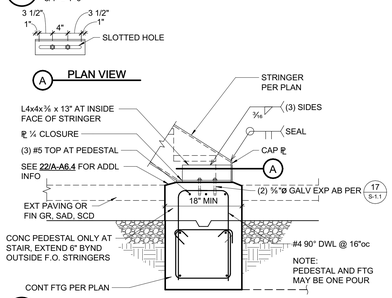

9 BOTTOM OF STRINGER AT EXTERIOR FOOTING
3/4" = 1'-0"

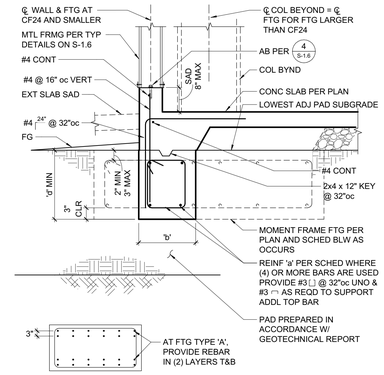

CONTINUOUS FOOTING SCHEDULE				
MARK	'b'	'd'	REINF 'a'	NOTES
CF18	18"	24"	(4) #5 T&B	PROVIDE #3 TIES @ 10"oc
CF30	30"	24"	(4) #6 T&B	PROVIDE #3 TIES @ 10"oc
CF60	60"	36"	(9) #8 T&B	PROVIDE #3 TIES @ 16"oc
CF60A	60"	36"	(14) #8 T&B	PROVIDE #3 TIES @ 16"oc
CF84	84"	36"	(14) #8 T&B	PROVIDE #3 TIES @ 16"oc

1 TYPICAL EXTERIOR FOOTING
3/4" = 1'-0"

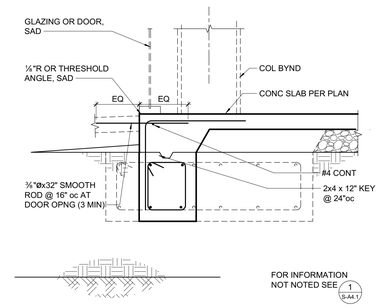

2 EXTERIOR FOOTING AT DOOR OR GLAZING
3/4" = 1'-0"

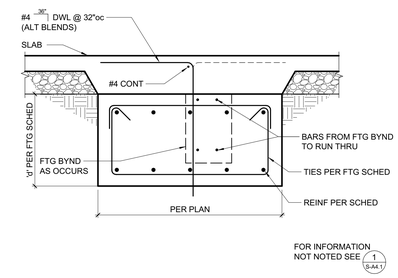

3 GRADE BEAM
3/4" = 1'-0"

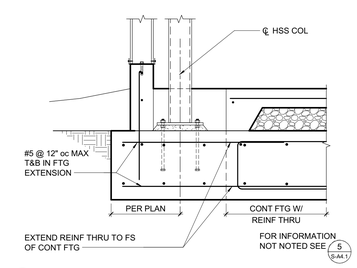

4 HSS COLUMN
3/4" = 1'-0"

IDENTIFICATION STAMP
DIV. OF THE STATE ARCHITECT
APP: 01-119994 INC:
REVIEWED FOR
SS ☑ FLS ☑ ACS ☑
DATE: 08/16/2022

QUATTROCCHI KWOK ARCHITECTS

Main Office:
636 Fifth Street, Santa Rosa, CA 95404
East Bay Office:
55 Harrison Street, Suite 525,
Oakland, CA 94607
(707) 576-0829

ZFA STRUCTURAL ENGINEERS
1212 fourth street | suite z — zfa.com
santa rosa ca 95404 — 707.526.0992
zfa job no. 21395 — copyright © 2020

THIS DOCUMENT AND THE IDEAS INCORPORATED HEREIN, AS AN INSTRUMENT OF PROFESSIONAL SERVICE, IS THE PROPERTY OF THE ENGINEER AND IS NOT TO BE USED, IN WHOLE OR IN PART FOR ANY OTHER PROJECT WITHOUT THE PRIOR WRITTEN AUTHORIZATION OF THE ENGINEER.

REGISTERED PROFESSIONAL ENGINEER CHRIS S. WARD No. 3 STRUCTURAL STATE OF CALIFORNIA

LIBERTY HIGH SCHOOL

NEW CLASSROOM BUILDING

850 2nd STREET
BRENTWOOD, CA
94513

LIBERTY UNION HIGH SCHOOL DISTRICT

REVISIONS

DSA APP NO. 01-119994
ARCH PROJECT NO: 1925.00
DRAWN BY:
DRAWING SCALE:
PTN: 61721-83 FILE NO: 7-H4
CONSTRUCTION DOCUMENTS
JUNE 24, 2022

SHEET TITLE
FOUNDATION DETAILS

SHEET NUMBER
S-A4.1

C:\revit_local\21395_Liberty HS_S21C_matsap.rvt
7/26/2022 10:07:31 AM

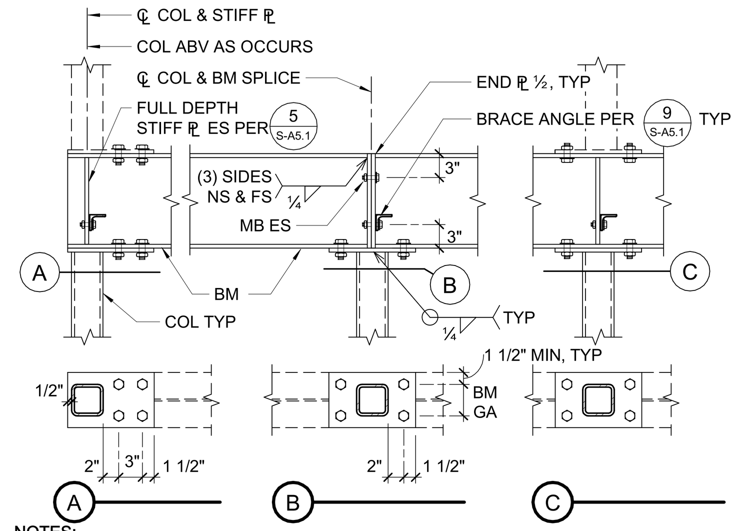

NOTES:
1. ALL COLUMN CAP PLATES SHALL BE THE SAME WIDTH AS BEAM FLANGE (OR COLUMN DIMENSION +½", WHICHEVER IS GREATER), THICKNESS SAME AS BEAM FLANGE, ½" MINIMUM.
2. ALL FASTENERS TO BE MB¾ø.

18 COLUMN ABOVE AND BELOW
3/4" = 1'-0"

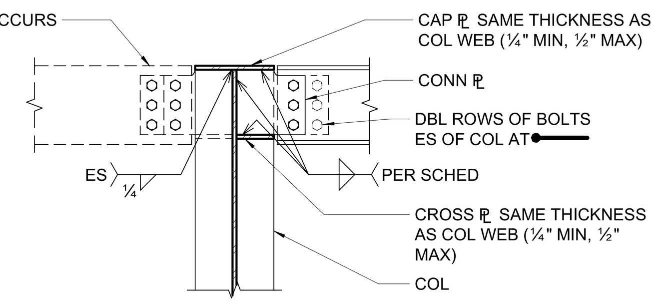

SEE 11/S-A5.1 FOR DIMENSIONS, ETC
& 1/S-A5.1 FOR CONN ℙ, BOLTS & WELDS

14 BEAM TO COLUMN CONNECTION
3/4" = 1'-0"

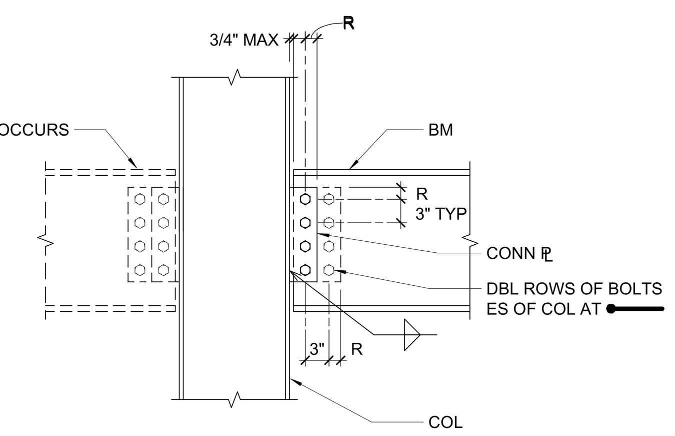

SEE 1/S-A5.1 FOR CONN ℙ, BOLTS, R DIMENSION, & WELD

10 BEAM TO COLUMN FLANGE CONNECTION
3/4" = 1'-0"

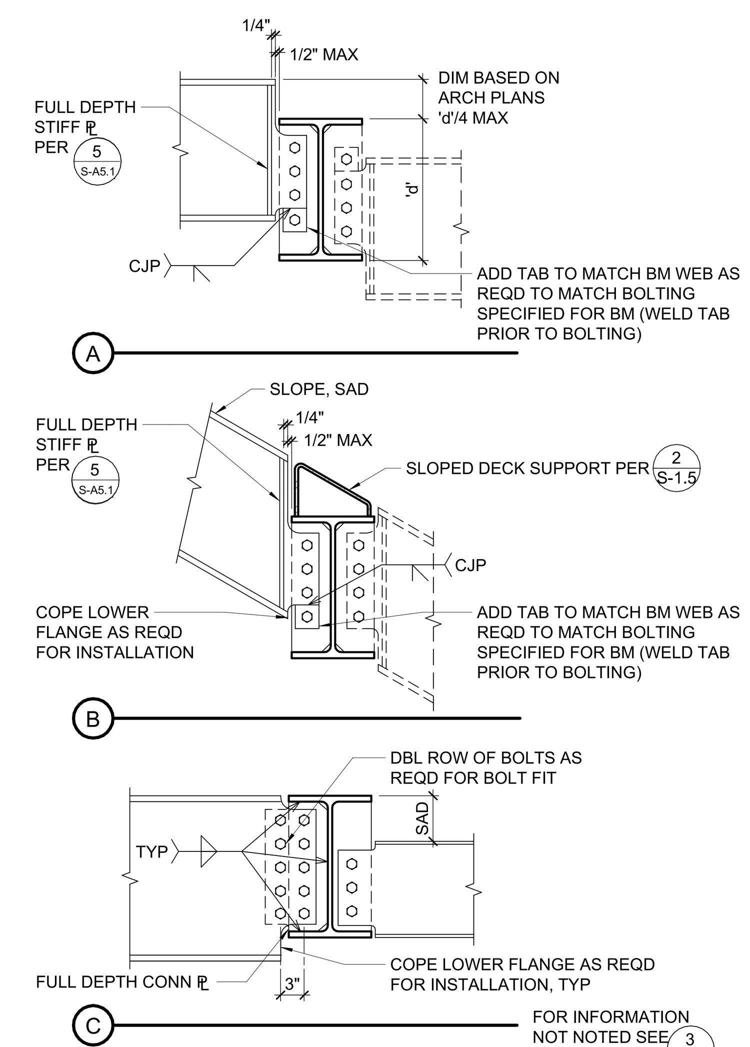

FOR INFORMATION NOT NOTED SEE 3/S-A5.1

6 TYPICAL BEAM TO BEAM CONNECTIONS
3/4" = 1'-0"

BEAM DEPTH	NO. BOLTS PER ROW	CONN. PLATE	CONN ℙ WELD SIZE*
W8, W10	2	ℙ ⅜	5/16"
W12, W14	3	ℙ ⅜	5/16"
W16	4	ℙ ⅜	5/16"
W18	5	ℙ ⅜	5/16"
W21	5	ℙ ½	⅜"
W24	6	ℙ ½	⅜"
W30	8	ℙ ½	⅜"

NOTES:
1. R = 1¾" SEE TYP CONNECTION DETAILS FOR ADDITIONAL DIMENSIONS, BOLT SPACING ETC.
2. HIGH STRENGTH BOLTS (HSB) ARE GRADE A325-N UNO. PREPARE MATING SURFACES & TIGHTEN "SNUG TIGHT" AS DEFINED IN THE SPECIFICATIONS. AT LINES MARKED "SFRS" (SEISMIC FORCE RESISTING SYSTEM) HSB AND MATING SURFACES ARE SLIP CRITICAL CLASS A, UNO.
3. USE ASTM A36 CONNECTION PLATES, UNO.
4. A COMPLETE PENETRATION BEVEL WELD MAY BE SUBSTITUTED FOR THE FILLET WELDS SPECIFIED.
5. HOLE SIZE = BOLT SIZE + 1/16" (BOLT SIZE + ⅛" FOR 1"ø AND LARGER BOLTS). SHORT SLOTTED HOLES (+1/16" VERT, + ¼" HORIZ) MAY BE SUBSTITUTED (EXCEPT AS NOTED) ROUND HOLES ARE REQUIRED AT SFRS CONNECTIONS.
6. USE SAME CONNECTIONS AT CHANNELS. FOR W6, C6 & ANGLES USE PLATE, WELD & BOLT SIZE PER W8 & SEE 4/S-A5.1
7. CONNECTION PLATE WELD SIZE REFERS TO THE WELD FROM THE CONNECTOR PLATE TO THE COLUMN, ADJACENT BEAM, ETC.

1 ⅞"ø HIGH STRENGTH BOLT (HSB) CONNECTION SCHEDULE
3/4" = 1'-0"

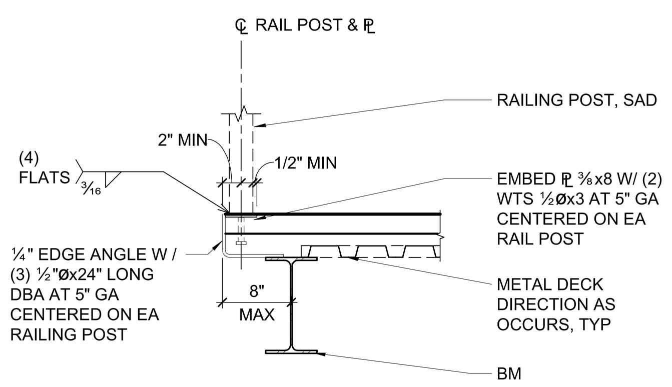

19 RAILING POST CONNECTION
3/4" = 1'-0"

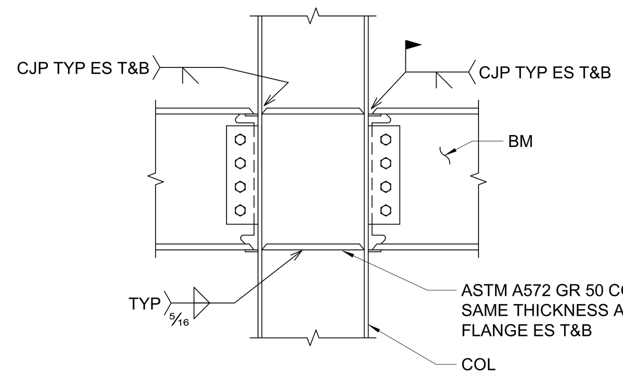

NOTES:
1. CANTILEVER BEAM SIZE TO MATCH ADJACENT BACK SPAN BEAM SIZE, UNO.
2. SHORE CANTILEVER AS REQUIRED.
3. REMOVE BACKER BARS WHERE EXPOSED TO VIEW.

FOR INFORMATION NOT NOTED SEE 10/S-A5.1

15 NON-FRAME MOMENT CONNECTION
3/4" = 1'-0"

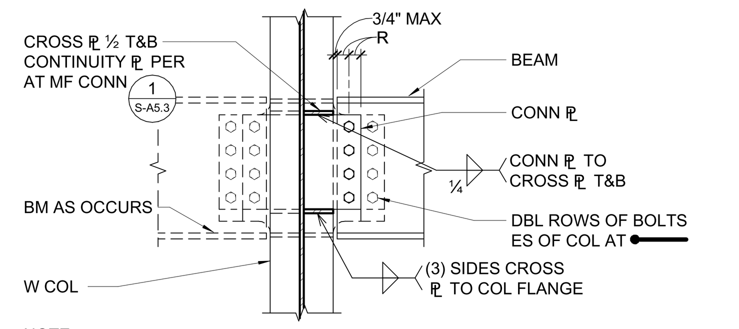

NOTE:
WHERE CONTINUITY PLATES CONFLICT W/ THIS DETAIL, USE THICKER PLATE & DEEPEN CONNECTION ℙ AS SHOWN DASHED

SEE 1/S-A5.1 FOR CONN ℙ, BOLTS, & WELD

11 BEAM TO COLUMN WEB
3/4" = 1'-0"

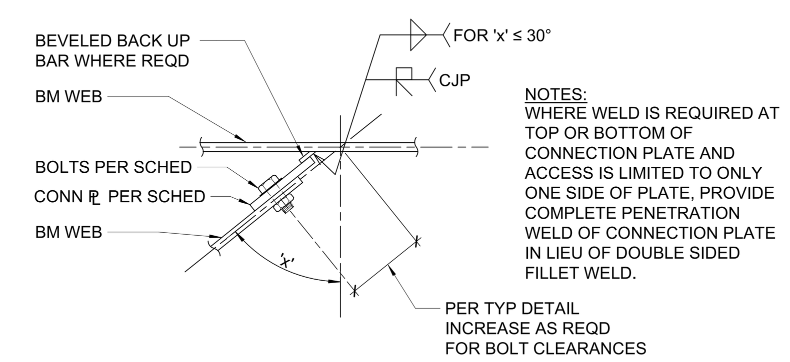

NOTES:
WHERE WELD IS REQUIRED AT TOP OR BOTTOM OF CONNECTION PLATE AND ACCESS IS LIMITED TO ONLY ONE SIDE OF PLATE, PROVIDE COMPLETE PENETRATION WELD OF CONNECTION PLATE IN LIEU OF DOUBLE SIDED FILLET WELD.

7 SKEWED BEAM CONNECTION - AT WEB
1 1/2" = 1'-0"

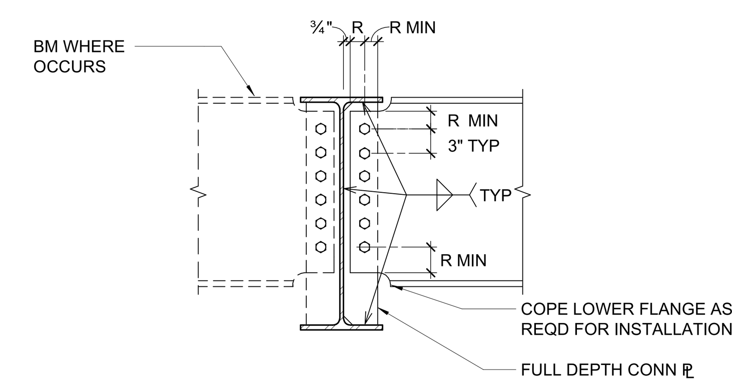

SEE 1/S-A5.1 FOR CONN ℙ, R DIMENSION, BOLTS, & WELD

3 TYPICAL FULL DEPTH BEAM TO BEAM CONNECTION
3/4" = 1'-0"

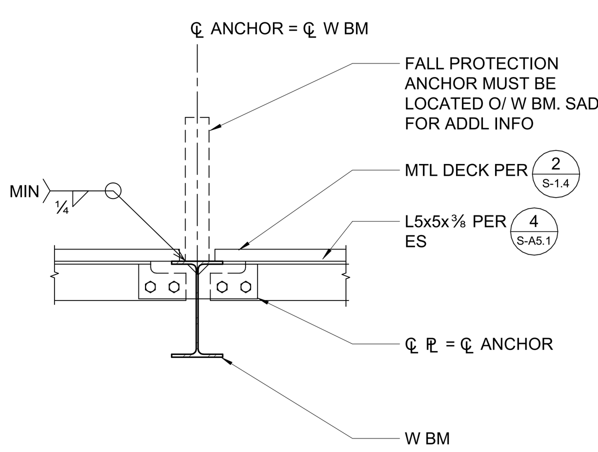

20 FALL PROTECTION ANCHOR CONNECTION
3/4" = 1'-0"

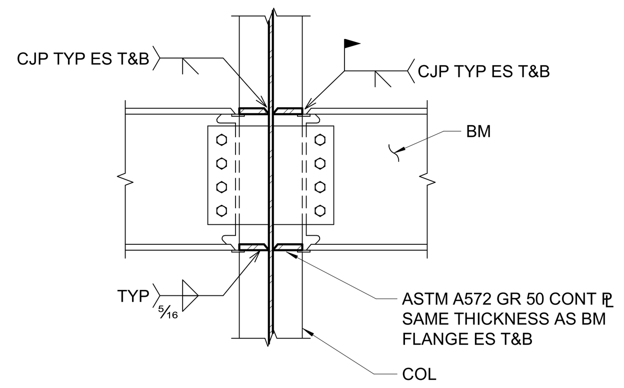

NOTES:
1. CANTILEVER BM SIZE TO MATCH ADJ BACK SPAN BM SIZE, UNO.
2. SHORE CANTILEVER AS REQUIRED.
3. REMOVE BACKER BARS WHERE EXPOSED TO VIEW.

FOR INFORMATION NOT NOTED SEE 11/S-A5.1

16 NON-FRAME MOMENT CONNECTION
3/4" = 1'-0"

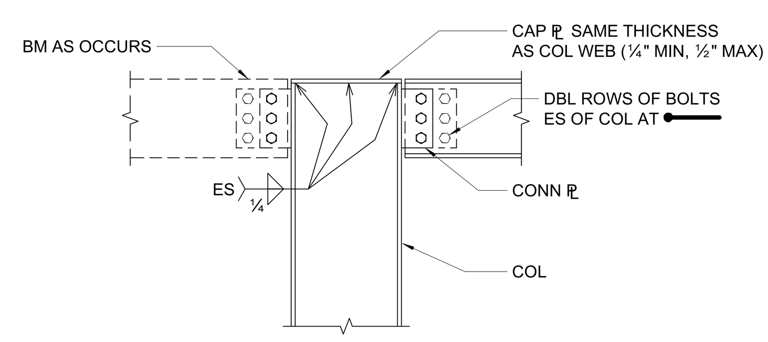

SEE 10/S-A5.1 FOR DIMENSIONS, ETC
& 1/S-A5.1 FOR CONN ℙ, BOLTS & WELDS

12 BEAM TO COLUMN CONNECTION
3/4" = 1'-0"

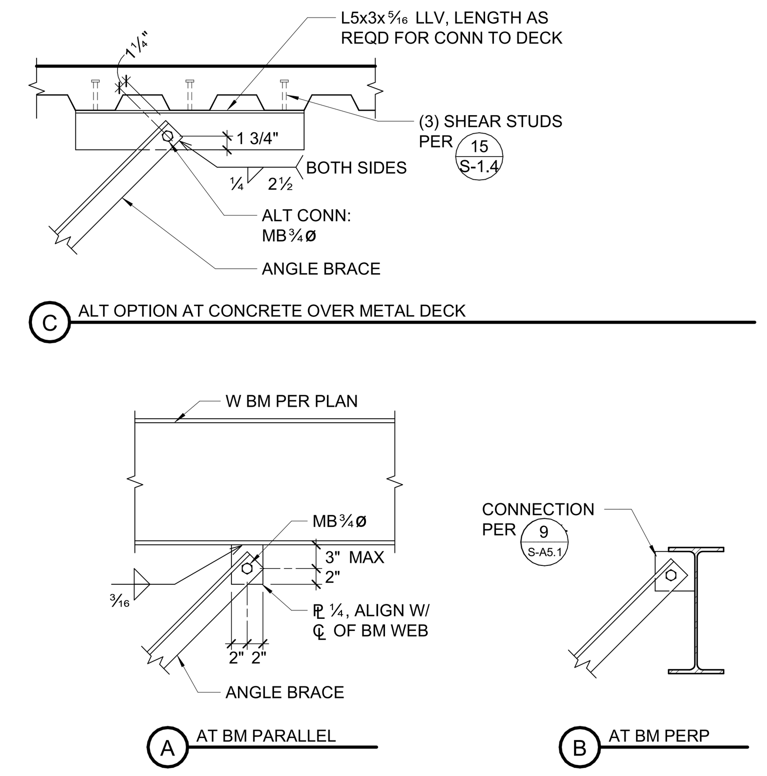

8 TOP OF BRACE
3/4" = 1'-0"

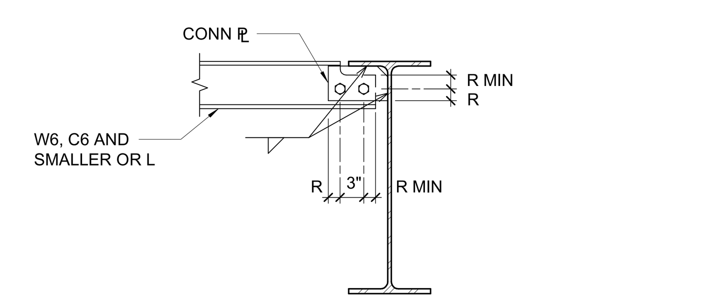

SEE 1/S-A5.1 FOR CONN ℙ, BOLTS, R DIMENSION, & WELD

4 TYPICAL SHALLOW BEAM DETAIL
3/4" = 1'-0"

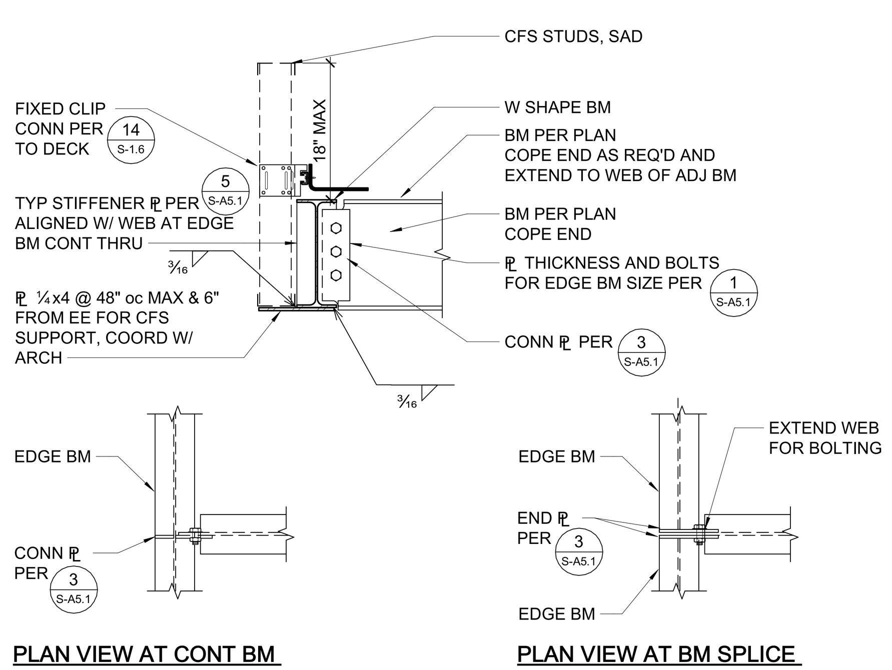

SEE 1/S-A5.1 FOR CONN ℙ, BOLTS, & WELD

17 RAIN CANOPY BEAM CONNECTION
3/4" = 1'-0"

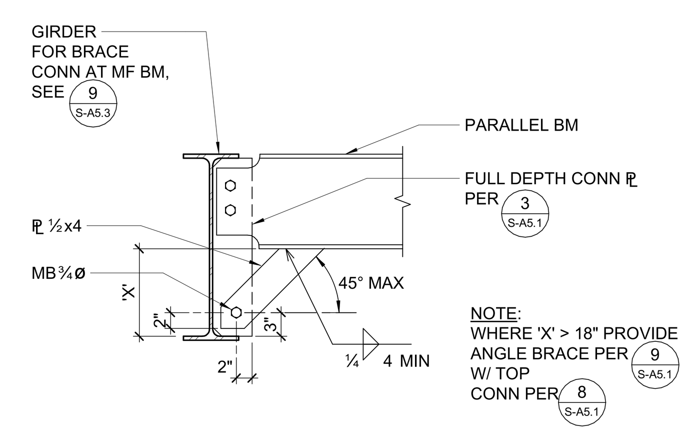

NOTE:
WHERE 'X' > 18" PROVIDE ANGLE BRACE PER 9/S-A5.1 W/ TOP CONN PER 8/S-A5.1

13 TYPICAL BOTTOM FLANGE BRACE TO PERPENDICULAR BEAM
3/4" = 1'-0"

SEE 13/S-A5.1 FOR BRACE AT PERPENDICULAR BM

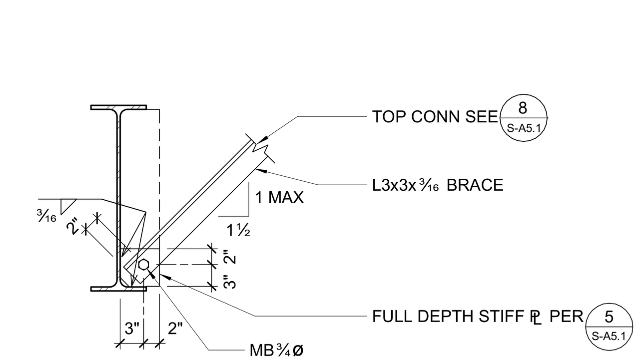

9 TYPICAL BEAM BOTTOM FLANGE BRACE
3/4" = 1'-0"

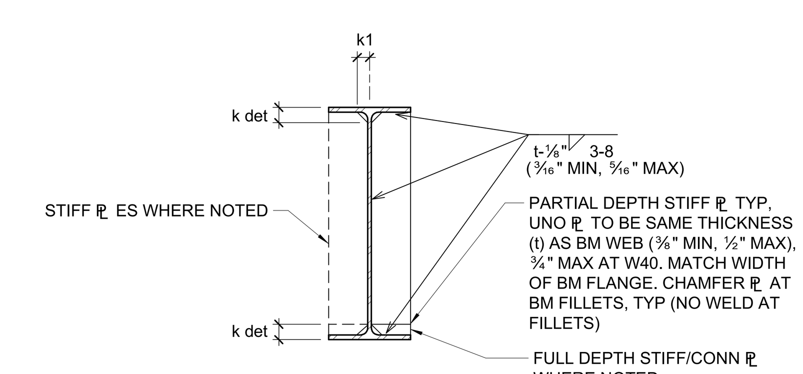

5 TYPICAL BEAM WEB STIFFENER PLATE DETAIL
3/4" = 1'-0"

IDENTIFICATION STAMP
DIV. OF THE STATE ARCHITECT
APP: 01-119994 INC:
REVIEWED FOR
SS ☑ FLS ☑ ACS ☑
DATE: 08/16/2022

QUATTROCCHI KWOK ARCHITECTS
Main Office:
636 Fifth Street, Santa Rosa, CA 95404
East Bay Office:
55 Harrison Street, Suite 525,
Oakland, CA 94607
(707) 576-0829

ZFA STRUCTURAL ENGINEERS
1212 fourth street | suite z
santa rosa ca 95404
zfa job no. 21395
zfa.com
707.526.0992
copyright © 2020

THIS DOCUMENT AND THE IDEAS INCORPORATED HEREIN, AS AN INSTRUMENT OF PROFESSIONAL SERVICE, IS THE PROPERTY OF THE ENGINEER AND IS NOT TO BE USED, IN WHOLE OR IN PART FOR ANY OTHER PROJECT WITHOUT THE PRIOR WRITTEN AUTHORIZATION OF THE ENGINEER.

REGISTERED PROFESSIONAL ENGINEER CHRIS S. WARNER No. S4613 STRUCTURAL STATE OF CALIFORNIA

LIBERTY HIGH SCHOOL

NEW CLASSROOM BUILDING

850 2nd STREET
BRENTWOOD, CA
94513

LIBERTY UNION HIGH SCHOOL DISTRICT

REVISIONS

DSA APP NO. 01-119994
ARCH PROJECT NO: 1925.00
DRAWN BY:
DRAWING SCALE:
PTN: 61721-83 FILE NO: 7-H4
CONSTRUCTION DOCUMENTS
JUNE 24, 2022

SHEET TITLE
STEEL FRAMING DETAILS

SHEET NUMBER
S-A5.1

C:\revit_local\21395_Liberty HS_S21C_mateap.rvt
7/26/2022 10:07:31 AM

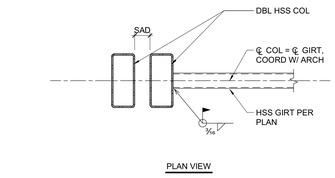

16 HSS GIRT TO COLUMN CONNECTION
3/4" = 1'-0"

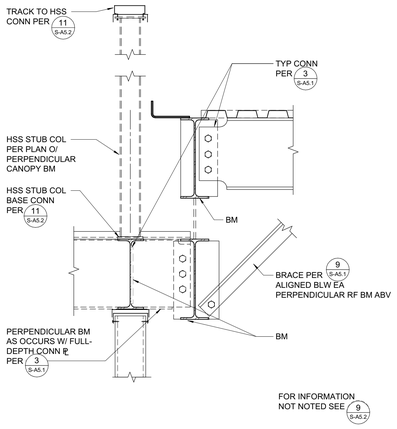

13 CANOPY ROOF BRACE
1" = 1'-0"

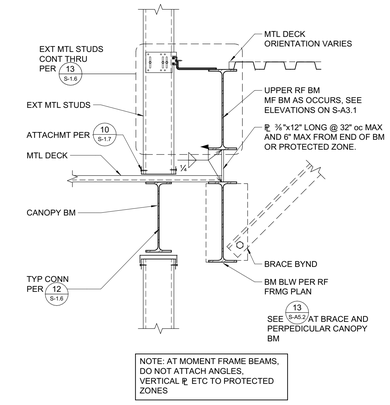

NOTE: AT MOMENT FRAME BEAMS, DO NOT ATTACH ANGLES, VERTICAL ℄ ETC TO PROTECTED ZONES

9 CANOPY ROOF AT UPPER ROOF
1" = 1'-0"

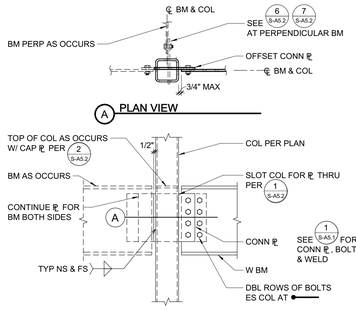

5 BEAM EACH SIDE TO HSS COLUMN
3/4" = 1'-0"

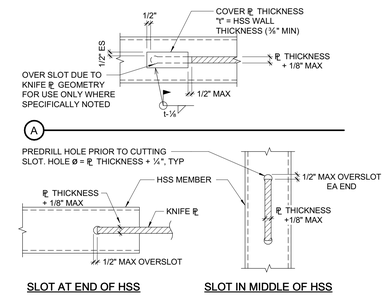

1 TYPICAL SLOTTED HSS FOR GUSSET CONNECTION
1 1/2" = 1'-0"

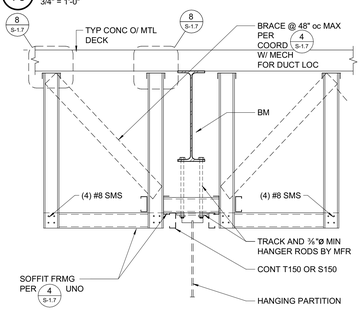

NOTES:
1. TOTAL PARTITION WEIGHT NOT TO EXCEED 15 PSF.
2. MAXIMUM DEFLECTION AFTER PARTITION INSTALLATION = 0.30"
3. PRIOR TO PARTITION INSTALLATION, CONCRETE SHALL ACHIEVE 28 DAY STRENGTH, AND ALL FRAMING AND FINISHES SHALL BE INSTALLED.
4. SEE 30/S-A9.4 FOR ADDITIONAL INFORMATION.

17 STEEL BEAM AT HANGING PARTITION
3/4" = 1'-0"

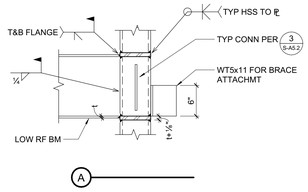

10 WALKWAY ROOF AT UPPER ROOF
1" = 1'-0"

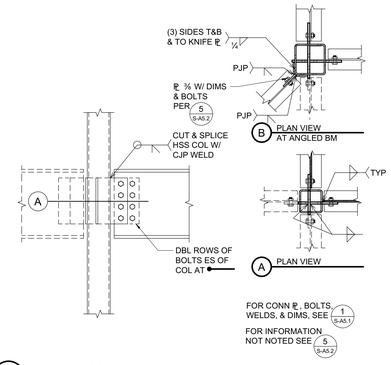

6 BEAM TO HSS COLUMN (2-WAY)
3/4" = 1'-0"

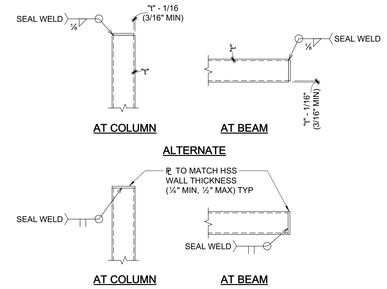

2 TYPICAL CAP PLATE
3/4" = 1'-0"

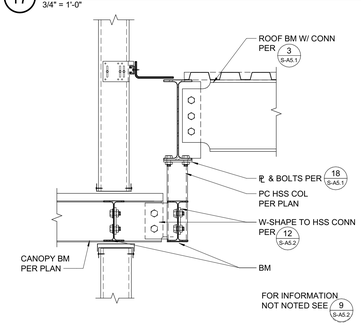

18 HANGING COLUMN AT CANOPY ROOF
1" = 1'-0"

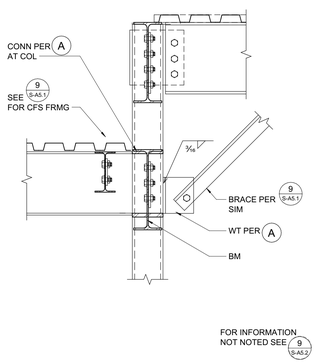

14 CANTILEVERED CANOPY ROOF BEAM AT HSS COLUMN
1" = 1'-0"

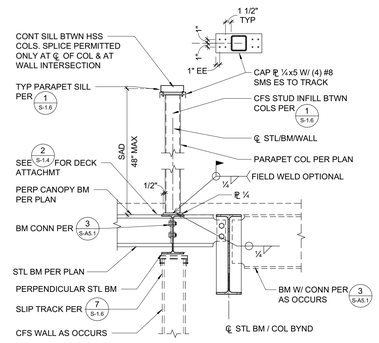

11 HSS PARAPET COLUMN TO BEAM OR TOP OF COLUMN
3/4" = 1'-0"

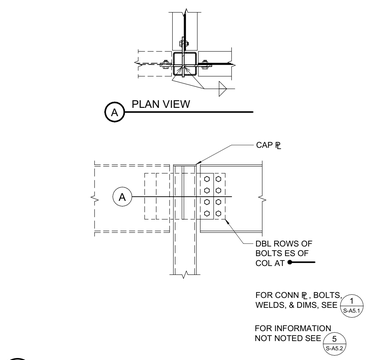

7 BEAM TO HSS COLUMN (2-WAY)
3/4" = 1'-0"

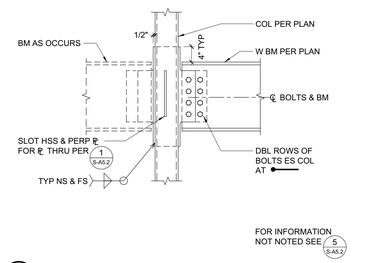

3 BEAM TO HSS COLUMN
3/4" = 1'-0"

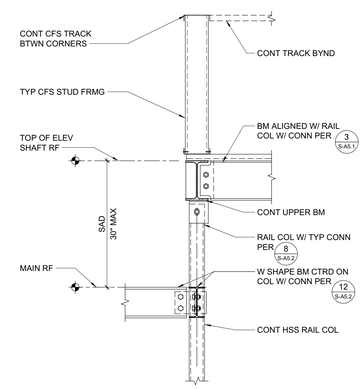

19 HSS ELEVATOR RAIL SUPPORT CONNECTION
3/4" = 1'-0"

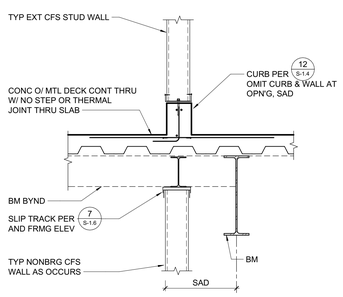

15 CURB AT WALKWAY WALL
3/4" = 1'-0"

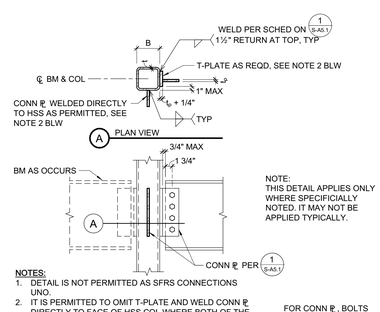

12 BEAM TO HSS COLUMN ('T' PLATE)
3/4" = 1'-0"

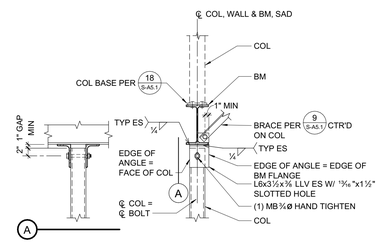

8 HSS ELEVATOR RAIL SUPPORT CONNECTION
3/4" = 1'-0"

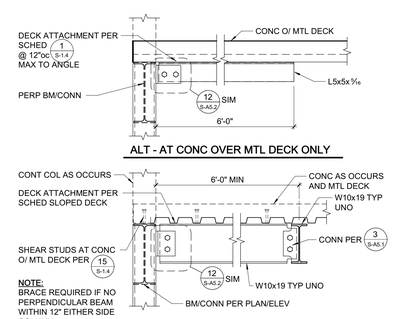

4 COLUMN BRACE TO ROOF/FLOOR
3/4" = 1'-0"

IDENTIFICATION STAMP
DIV. OF THE STATE ARCHITECT
APP: 01-119994 INC:
REVIEWED FOR
SS ☑ FLS ☑ ACS ☑
DATE: 08/16/2022

QUATTROCCHI KWOK ARCHITECTS
Main Office:
636 Fifth Street, Santa Rosa, CA 95404
East Bay Office:
55 Harrison Street, Suite 525,
Oakland, CA 94607
(707) 576-0829

ZFA STRUCTURAL ENGINEERS
1212 fourth street | suite z zfa.com
santa rosa ca 95404 707.526.0992
zfa job no. 21395
copyright © 2020

THIS DOCUMENT AND THE IDEAS INCORPORATED HEREIN, AS AN INSTRUMENT OF PROFESSIONAL SERVICE, IS THE PROPERTY OF THE ENGINEER, AND IS NOT TO BE USED, IN WHOLE OR IN PART FOR ANY OTHER PROJECT WITHOUT THE PRIOR WRITTEN AUTHORIZATION OF THE ENGINEER.

REGISTERED PROFESSIONAL ENGINEER CHARLES S. HARRIS III STRUCTURAL STATE OF CALIFORNIA

LIBERTY HIGH SCHOOL

NEW CLASSROOM BUILDING

850 2nd STREET
BRENTWOOD, CA
94513

LIBERTY UNION HIGH SCHOOL DISTRICT

REVISIONS

DSA APP NO. 01-119994
ARCH PROJECT NO: 1925.00
DRAWN BY:
DRAWING SCALE:
PTN: 61721-83 FILE NO: 7-H4
CONSTRUCTION DOCUMENTS
JUNE 24, 2022

SHEET TITLE
STEEL FRAMING DETAILS

SHEET NUMBER
S-A5.2

C:\revit_local\21395_Liberty HS_S21C_mateap.rvt
7/26/2022 10:07:34 AM

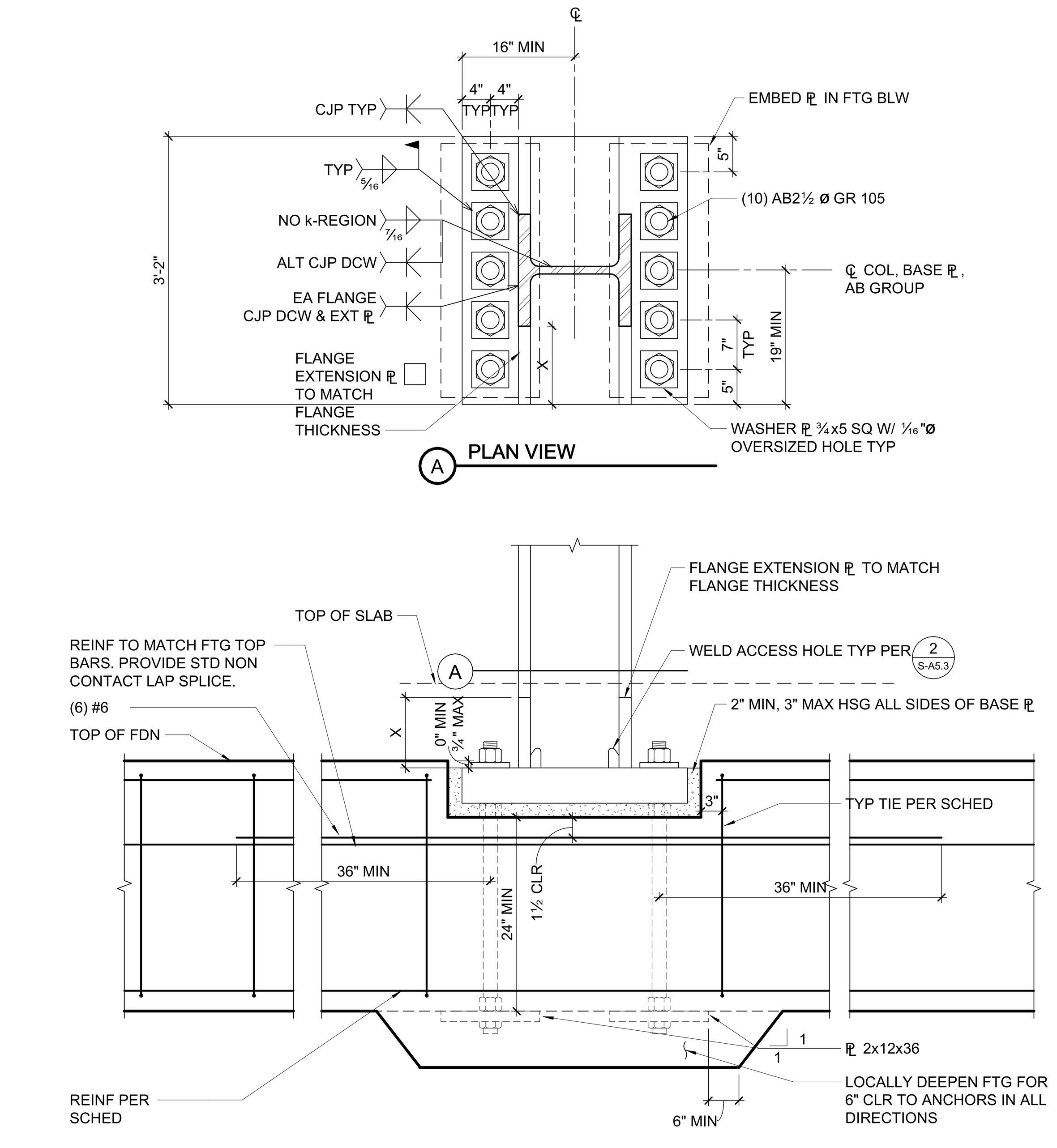

10 WF COLUMN BASE PLATE
3/4" = 1'-0"

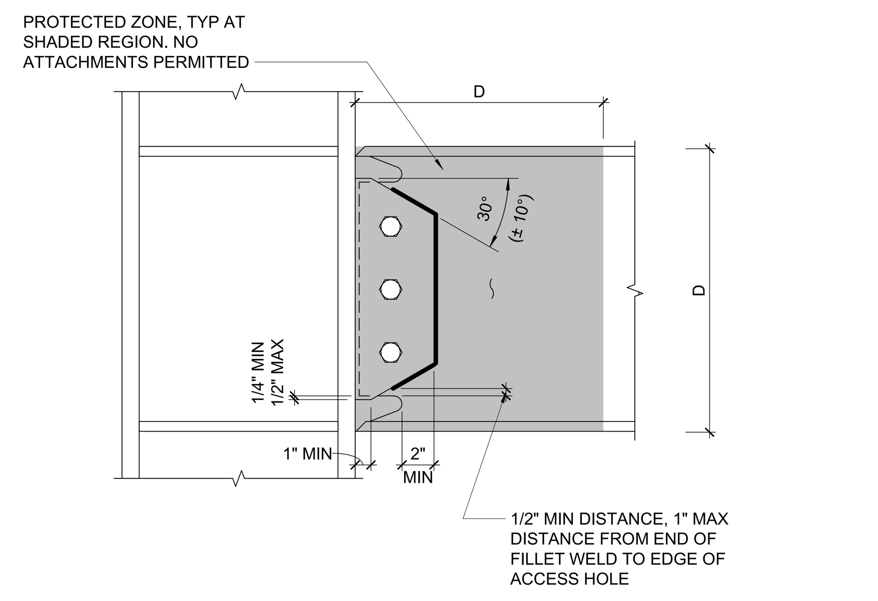

7 PROTECTED ZONE
1 1/2" = 1'-0"

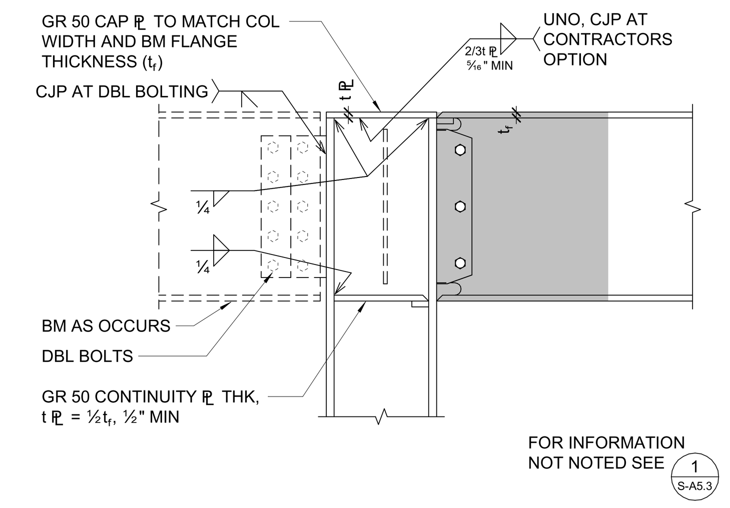

3 MOMENT CONNECTION ONE SIDE
3/4" = 1'-0"
(SMF) SPECIAL MOMENT FRAME CONNECTION. NO RBS
ℙ AND WELD ON CONN ℙ IS TO TAKE ENTIRE CONN SHEAR DO NOT USE BOLTS AS PART OF CONN CAPACITY

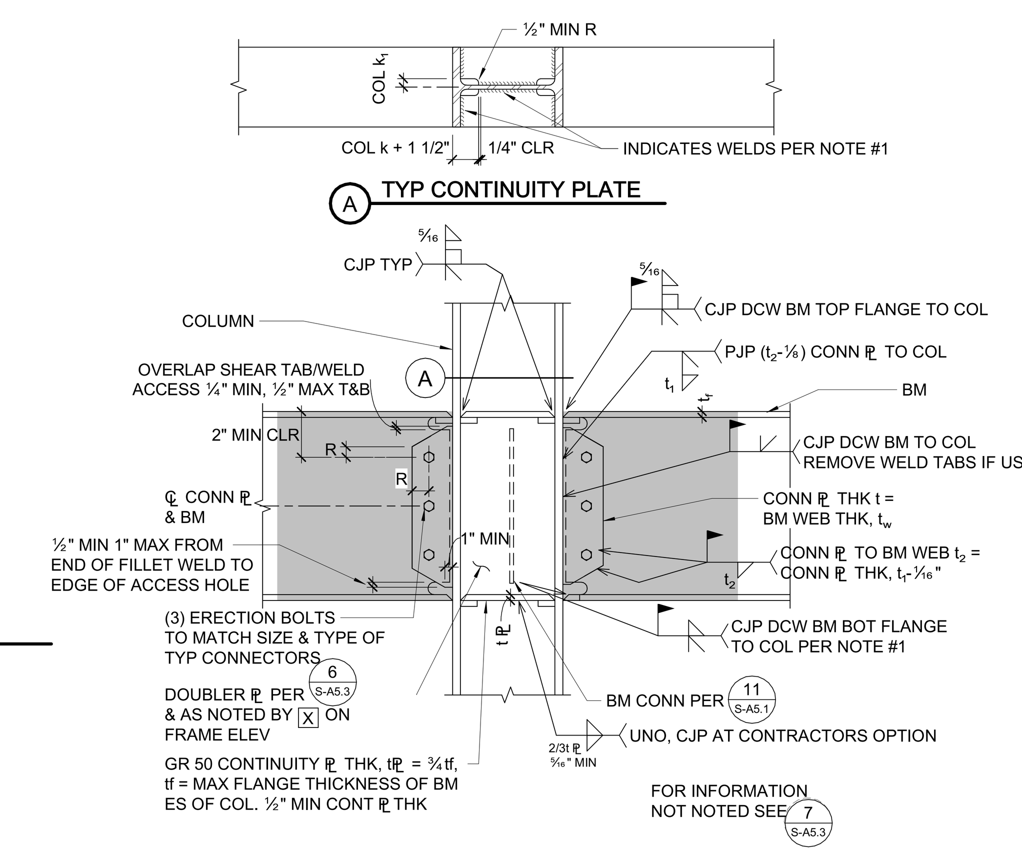

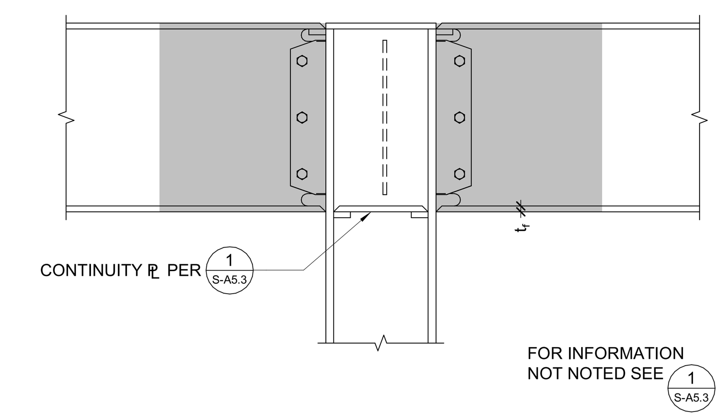

4 MOMENT CONNECTION BOTH SIDES
3/4" = 1'-0"

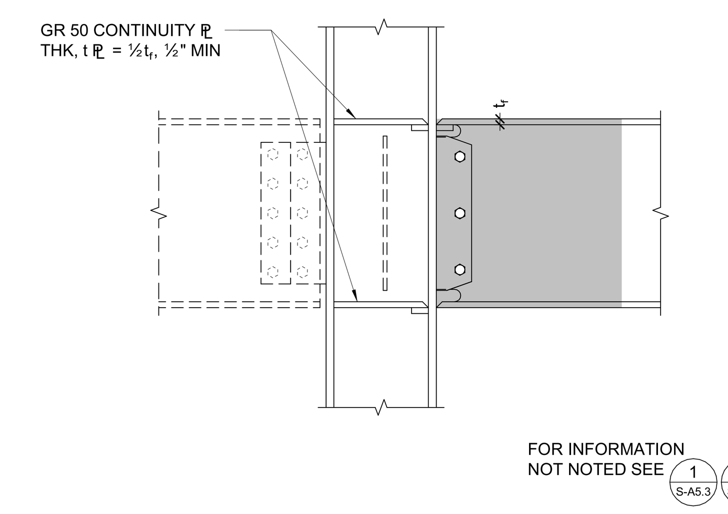

5 MOMENT CONNECTION ONE SIDE
3/4" = 1'-0"

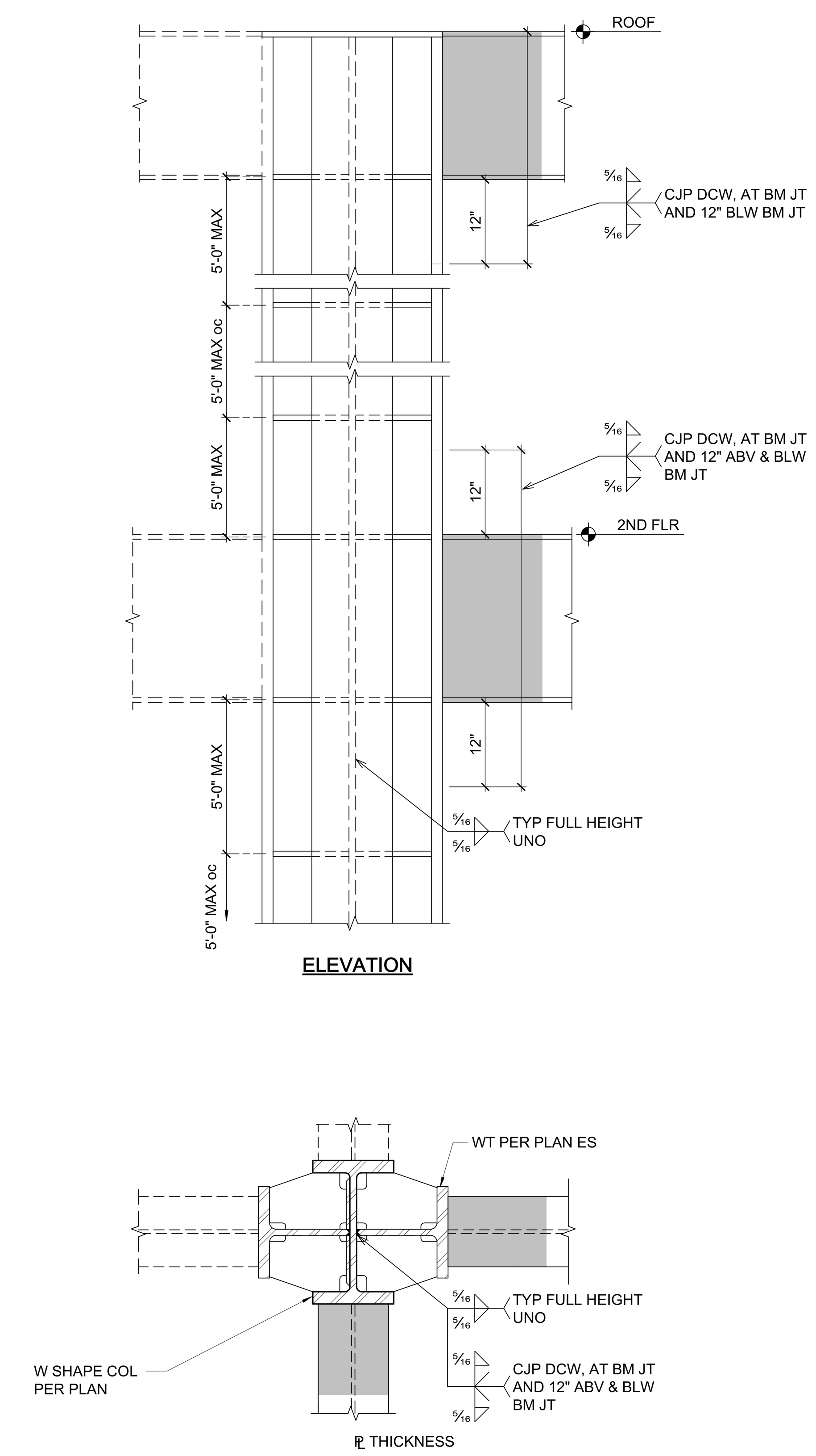

NOTES:
1. PROVIDE CONTINUITY ℙ AT TOP & BOTTOM OF BEAMS PER 1/S-A5.3 AND ½" THICK CONTINUITY PLATE @ 5'-0"oc MAX SPACING ALONG THE LENGTH OF THE WTx TO Wx COLUMN.

FOR INFORMATION NOT NOTED SEE 1/S-A5.3

8 CRUCIFORM COLUMN
3/4" = 1'-0"

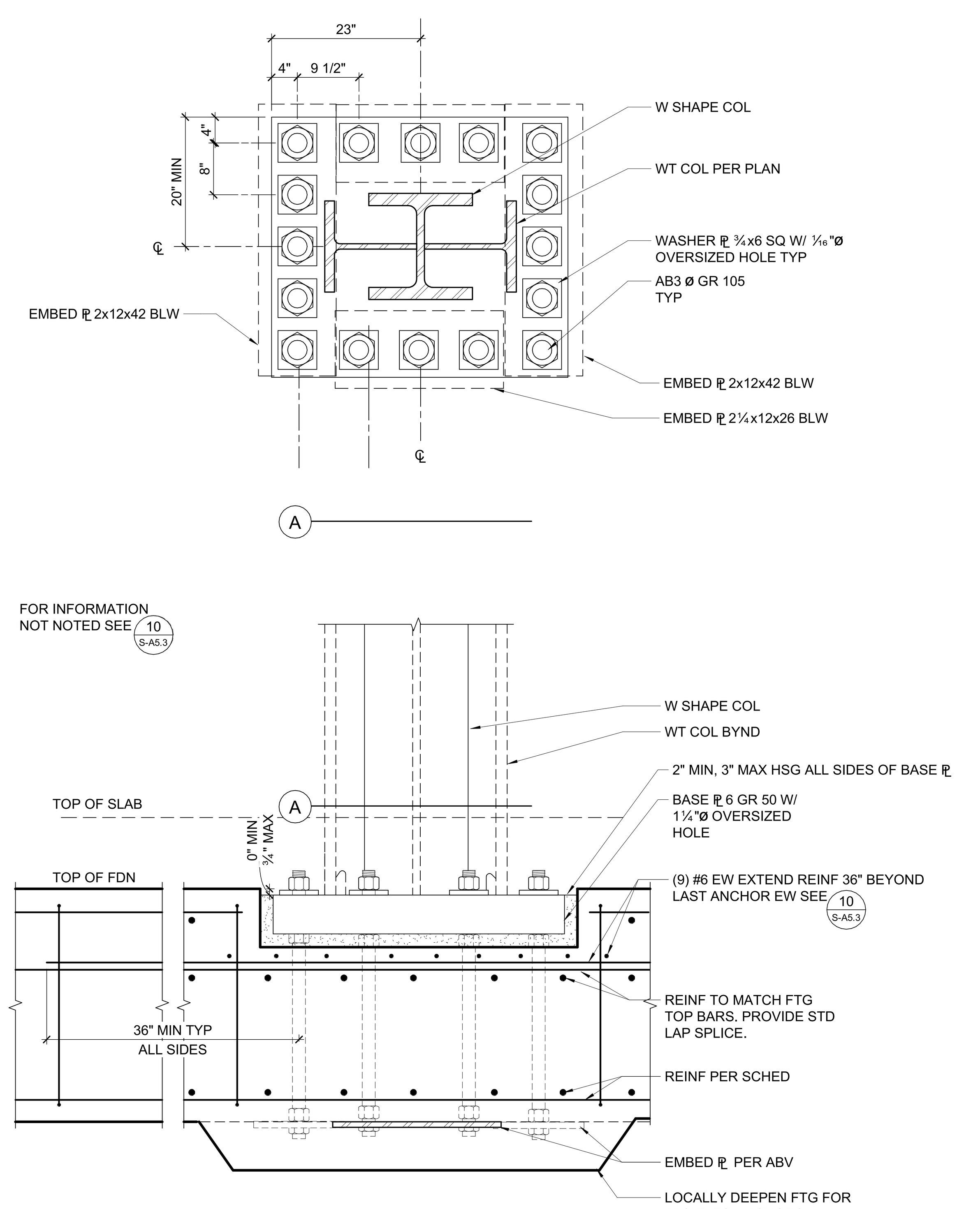

11 CRUCIFORM COLUMN BASE PLATE
3/4" = 1'-0"

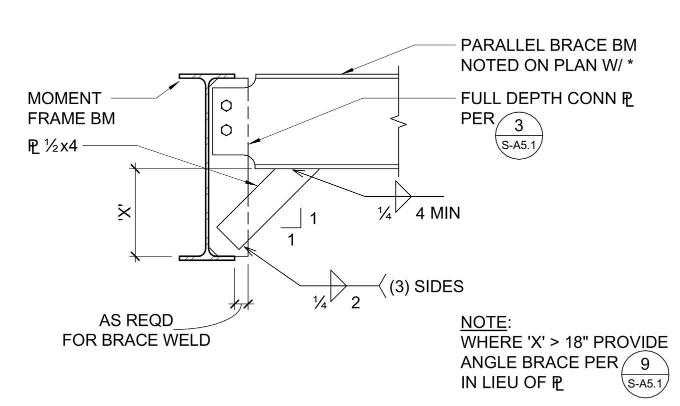

NOTE:
WHERE 'X' > 18" PROVIDE ANGLE BRACE PER 9/S-A5.1 IN LIEU OF ℙ

FOR INFORMATION NOT NOTED SEE 3/S-A5.1

9 MOMENT FRAME BRACE BEAM CONNECTION
3/4" = 1'-0"

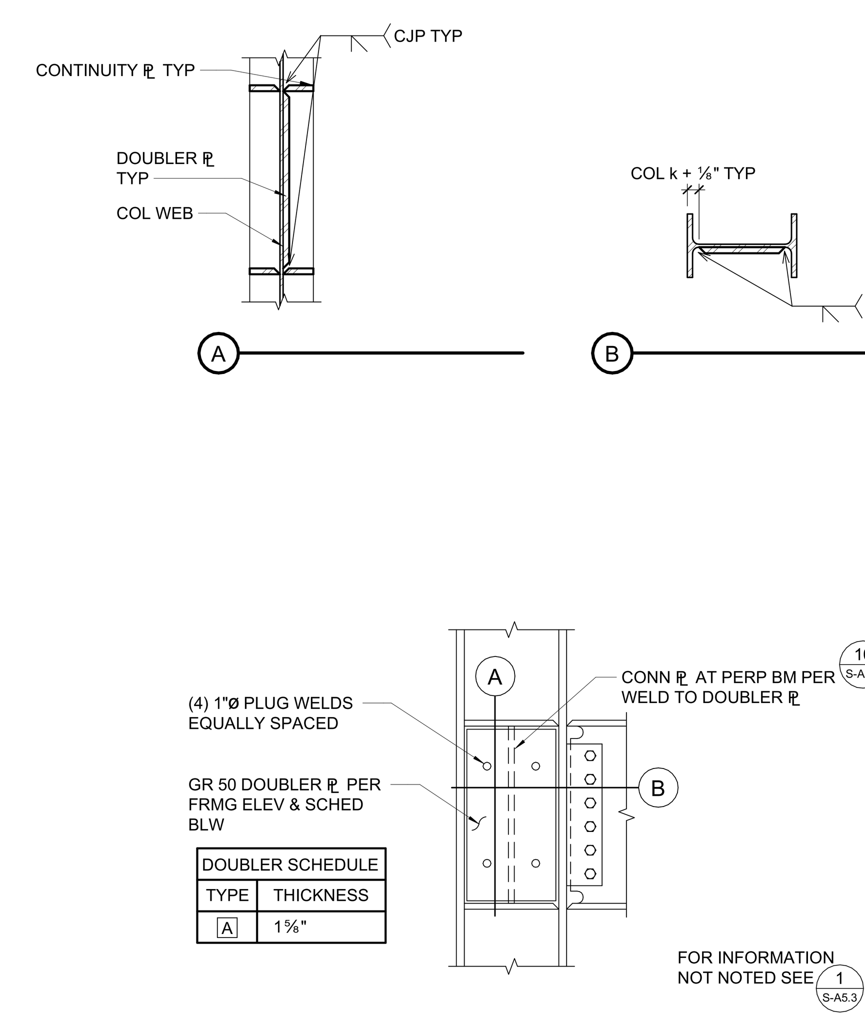

DOUBLER SCHEDULE	
TYPE	THICKNESS
A	1⅝"

6 DOUBLER PLATES
3/4" = 1'-0"

NOTES:

1. BACKING BARS SHALL BE REMOVED FROM BEAM BOTTOM FLANGES AFTER COMPLETION OF THE WELD. THE WELD SHALL BE GROUND SMOOTH AND THEN THE ROOT INSPECTED FOR IMPERFECTIONS. IMPERFECTIONS, IF FOUND, ARE TO BE REMOVED BY BACK GOUGING OR GRINDING TO SOUND MATERIAL AND THE AREA RE-WELDED. A FILLET WELD SHALL BE APPLIED TO REINFORCE THE JOINT (SEE AWS WELD TYPE TC-U4b AND NOTE S d & g OF FIGURE 3.4 OF D1.1).
2. ATTACHMENTS TO THE PROTECTED ZONE ARE PROHIBITED PER DETAIL 7/S-A5.3 PAINT PROTECTED ZONES YELLOW, EXCEPT WHERE EXPOSED TO VIEW. WHERE EXPOSED TO VIEW, IDENTIFY AND MARK PROTECTED ZONES PERMANENTLY. COORDINATE WITH ARCHITECT.
3. CONTRACTOR SHALL DEVELOP AND SUBMIT A WELDING PROCEDURE SPECIFICATION (WPS) FOR EACH WELD, IN FULL ACCORDANCE WITH THE LATEST EDITION OF THE AWS D1.1 STRUCTURAL WELDING CODE, THE AWS D1.8 SEISMIC SUPPLEMENT AND THE FOLLOWING REQUIREMENTS. ALL WELDING SHALL BE PERFORMED IN STRICT ADHERENCE TO THE APPROVED WPS.
4. WHERE PERFORMING RESTRICTED ACCESS WELDS AS DEFINED PER AWS D1.8, WELDERS SHALL MEET SUPPLEMENTAL WELDER QUALIFICATIONS PER AWS D1.8 ANNEX D WITHIN THE LAST 36 MONTHS.
5. WELDERS WHOSE WORK FAILS TO PASS INSPECTION AT TWO LOCATIONS, OR WHO ARE FOUND ON TWO OCCASIONS TO BE PLACING WELD MATERIALS INCONSISTENT WITH THE REQUIREMENTS SET FORTH IN THE WPS, SHALL NOT BE PERMITTED TO WELD ANY ADDITIONAL MOMENT RESISTING FRAME CONNECTIONS.
6. SEQUENCE OF ERECTION FOR BEAM-COLUMN CONNECTIONS SHALL BE AS FOLLOWS:
   A. SECURE BEAM-TO-COLUMN WITH WEB BOLTS IN SNUG TIGHT CONDITION.
   B. PROVIDE FLANGE WELDS.
   C. ALLOW FLANGE WELDS TO CURE FULLY.
   D. PROVIDE WEB WELDS.
   E. LEAVE WEB BOLTS IN SNUG TIGHT CONDITION.
7. WELDING PROCESSES SHALL BE LIMITED TO SHIELDED METAL ARC WELDING (SMAW) AND FLUX CORE ARC WELDING (FCAW). SHOP WELDING MAY ALSO BE SUBMERGED ARC WELDING (SAW).
8. FCAW FILLER METAL WIRE SHALL BE LIMITED TO 7/64 INCH DIAMETER MAXIMUM. SMAW WELDING ELECTRODES SHALL BE LIMITED TO 5/32 INCH DIAMETER MAXIMUM.
9. DEMAND CRITICAL WELD (DCW) ELECTRODES SHALL PROVIDE MINIMUM CHARPY V-NOTCH IMPACT TEST VALUES OF 20 FT-LBS AT 0 DEGREES FARENHEIT AND 40 FT-LBS AT 70 DEGREES FARENHEIT AND SHALL HAVE A MINIMUM STRENGTH OF 70 KSI.
10. THE MINIMUM PREHEAT AND INTERPASS TEMPERATURE REQUIREMENTS OF AWS D1.1, SECTION 4 SHALL BE FOLLOWED. AWS D1.1, ANNEX I "GUIDELINES ON ALTERNATIVE METHODS FOR DETERMINING PREHEAT" MAY ALSO BE USED TO ESTABLISH MINIMUM PREHEAT AND INTERPASS TEMPERATURES IN ACCORDANCE WITH AWS D1.1, SECTION 4.8.4.
11. RUN-OFF TABS PER AWS D1.1 WITH A MINIMUM LENGTH OF 1.5 TIMES THE BEAM FLANGE THICKNESS SHALL BE USED FOR COMPLETE PENETRATION FLANGE WELDS. ALL WELDS SHALL BE STARTED AND COMPLETED ON THE RUN-OFF TABS AS MUCH AS PRACTICABLE.
12. BACKING BARS SHALL CONTINUE TO THE ENDS OF THE RUN-OFF TABS.
13. WELD DAMS ARE NOT PERMITTED.
14. WELD ACCESS HOLES ADJACENT TO TOP & BOTTOM BEAM FLANGES SHALL CONFORM TO 2/S-A5.3
15. ALL TACK WELDS NOT INCORPORATED INTO THE FINAL WELDS SHALL BE REMOVED.
16. ALL WELDS SHALL BE 100% ULTRASONICALLY (UT) INSPECTED PER AWS D1.1 REQUIREMENTS. BOTTOM FLANGE WELDS SHALL BE ULTRASONICALLY INSPECTED FROM BOTH SIDES OF THE BOTTOM FLANGE. ALL ULTRASONIC WELDING INSPECTION SHALL BE PERFORMED BY INSPECTORS WITH AT LEAST A UT LEVEL II CERTIFICATION ACCORDING TO AWS D1.1.

1 MOMENT CONNECTION 2 SIDES
3/4" = 1'-0"

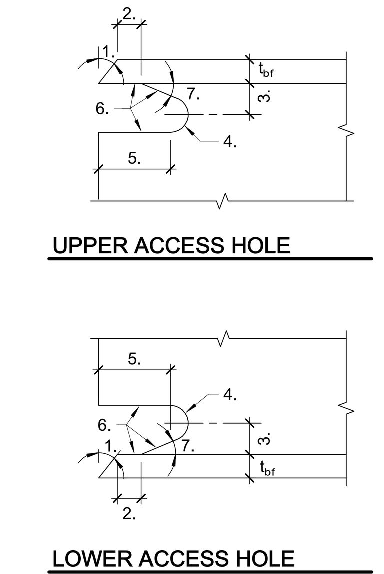

NOTES:
1. ANGLE AS REQUIRED FOR SPECIFIED GROOVE WELD PROCEDURE.
2. t_{bf} OR ½" (WHICHEVER IS GREATER) (+ ½ t_{bf}, - ¼ t_{bf}).
3. MINIMUM ¾ t_{bf} OR ¾" (WHICHEVER IS GREATER), MAXIMUM t_{bf} (+¼", -0").
4. ⅜" MINIMUM RADIUS (+ UNLIMITED, - 0").
5. MINIMUM 3 t_{bf} (±½") OR 1½" (WHICHEVER IS GREATER).
6. SURFACES SHALL BE FREE OF NOTCHES AND GOUGES. SURFACE ROUGHNESS SHALL NOT EXCEED 500 MICRO INCHES.
7. TOLERANCES SHALL NOT ACCUMULATE TO THE EXTENT THAT THE ANGLE OF THE ACCESS HOLE CUT TO THE FLANGE SURFACE EXCEEDS 25 DEGREES.

2 WELD ACCESS HOLE DETAIL
3/4" = 1'-0"

C:\revit_local\21395_Liberty HS_S21C_mateap.rvt
7/26/2022 10:07:37 AM

IDENTIFICATION STAMP
DIV. OF THE STATE ARCHITECT
APP: 01-119994 INC:
REVIEWED FOR
SS ☑ FLS ☑ ACS ☑
DATE: 08/16/2022

QUATTROCCHI KWOK ARCHITECTS
Main Office:
636 Fifth Street, Santa Rosa, CA 95404
East Bay Office:
55 Harrison Street, Suite 525,
Oakland, CA 94607
(707) 576-0829

ZFA STRUCTURAL ENGINEERS
1212 fourth street | suite z
santa rosa ca 95404
zfa job no. 21395
zfa.com
707.526.0992
copyright © 2020

THIS DOCUMENT AND THE IDEAS INCORPORATED HEREIN, AS AN INSTRUMENT OF PROFESSIONAL SERVICE, IS THE PROPERTY OF THE ENGINEER AND IS NOT TO BE USED, IN WHOLE OR IN PART FOR ANY OTHER PROJECT WITHOUT THE PRIOR WRITTEN AUTHORIZATION OF THE ENGINEER.

REGISTERED PROFESSIONAL ENGINEER CHRIS S. WARNER No. S4613 STRUCTURAL STATE OF CALIFORNIA

LIBERTY HIGH SCHOOL

NEW CLASSROOM BUILDING

850 2nd STREET
BRENTWOOD, CA
94513

LIBERTY UNION HIGH SCHOOL DISTRICT

REVISIONS

DSA APP NO. 01-119994

ARCH PROJECT NO: 1925.00
DRAWN BY:
DRAWING SCALE:
PTN: 61721-83 FILE NO: 7-H4
CONSTRUCTION DOCUMENTS
JUNE 24, 2022

SHEET TITLE
STEEL SPECIAL MOMENT FRAME (WUF-W) DETAILS

SHEET NUMBER
S-A5.3

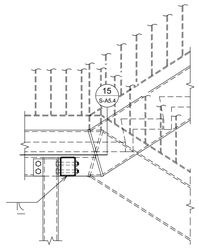

FOR INFORMATION NOT NOTED SEE 5 S-A5.4

14 HSS COLUMN AT LANDING BEAM - ALTERNATE
3/4" = 1'-0"

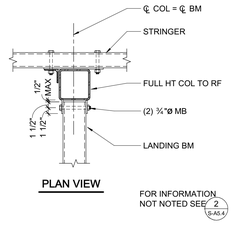

PLAN VIEW

FOR INFORMATION NOT NOTED SEE 2 S-A5.4

10 HSS LANDING BEAM AT FULL HEIGHT COLUMN
3/4" = 1'-0"

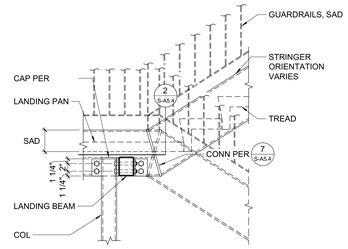

14 SEE S-A5.4 FOR ALTERNATE LANDING BM CONN

5 HSS COLUMN AT LANDING BEAM
3/4" = 1'-0"

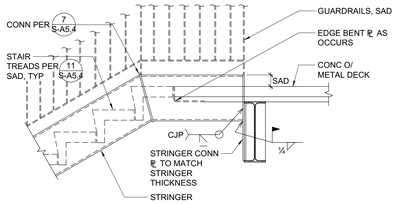

A

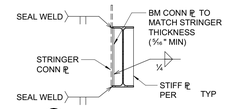

B

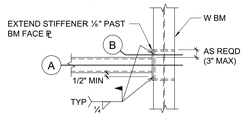

TOP VIEW

1 STRINGER CONNECTION TO W SHAPE
3/4" = 1'-0"

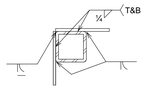

WELDS

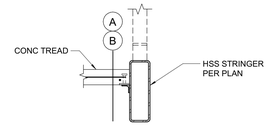

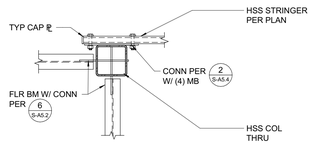

PLAN VIEW

6 VERTICAL HSS BASE CONNECTION
3/4" = 1'-0"

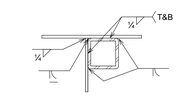

WELDS FOR STRINGER THRU

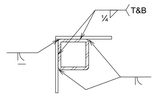

WELDS FOR CORNER CONDITION

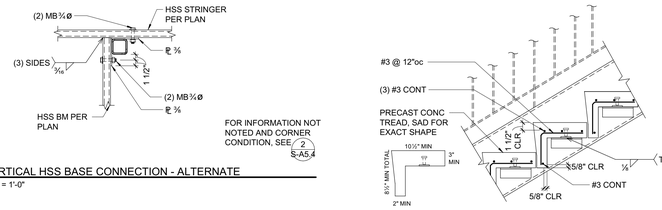

A PRECAST TREAD TO ANGLE SUPPORT

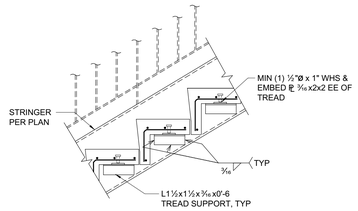

B ANGLE SUPPORTS TO STRINGER

11 STAIR TREAD CONNECTION
1" = 1'-0"

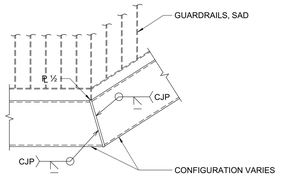

7 SHAPED STRINGER CONNECTION
3/4" = 1'-0"

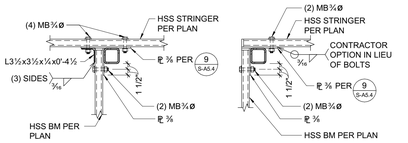

STRINGER THRU

A CORNER CONDITION

2 VERTICAL HSS BASE CONNECTION
3/4" = 1'-0"

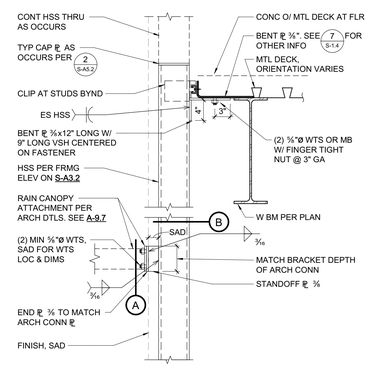

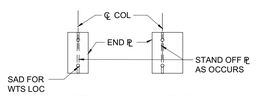

AT UPPER CONN AT LOWER CONN

A RAIN CANOPY CONNECTION PLATES

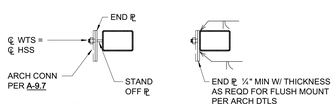

B RAIN CANOPY CONNECTION PLATE OPTIONS

16 HSS AT RAIN CANOPY
1" = 1'-0"

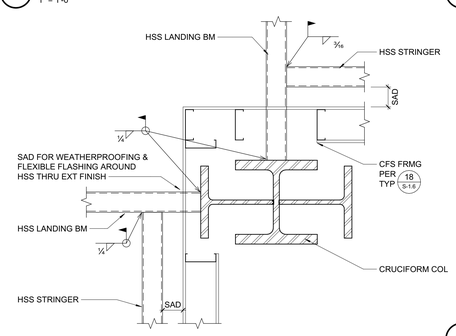

PLAN VIEW

12 STRINGER CONNECTION TO MOMENT FRAME COLUMN
1" = 1'-0"

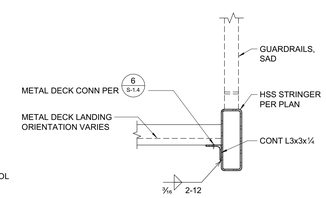

8 EDGE OF LANDING
1" = 1'-0"

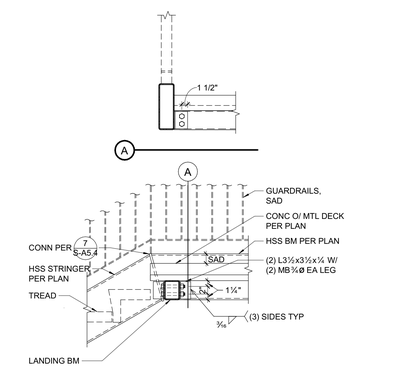

3 SHAPED STRINGER SUPPORTING LANDING BEAM
3/4" = 1'-0"

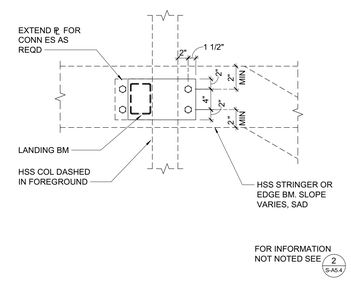

9 LANDING COLUMN CONNECTION PLATE
1" = 1'-0"

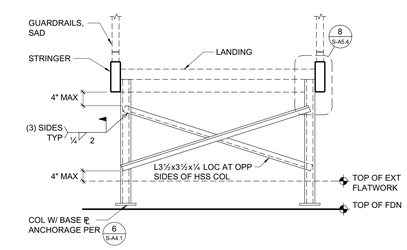

4 DIAGONAL CROSS BRACING
1/2" = 1'-0"

IDENTIFICATION STAMP
DIV. OF THE STATE ARCHITECT
APP: 01-119994 INC:
REVIEWED FOR
SS ☑ FLS ☑ ACS ☑
DATE: 08/16/2022

QUATTROCCHI KWOK ARCHITECTS

Main Office:
636 Fifth Street, Santa Rosa, CA 95404
East Bay Office:
55 Harrison Street, Suite 525,
Oakland, CA 94607
(707) 576-0829

ZFA STRUCTURAL ENGINEERS
1212 fourth street | suite z zfa.com
santa rosa ca 95404 707.526.0992
zfa job no. 21395

copyright © 2020

THIS DOCUMENT AND THE IDEAS INCORPORATED HEREIN, AS AN INSTRUMENT OF PROFESSIONAL SERVICE, IS THE PROPERTY OF THE ENGINEER AND IS NOT TO BE USED, IN WHOLE OR IN PART FOR ANY OTHER PROJECT WITHOUT THE PRIOR WRITTEN AUTHORIZATION OF THE ENGINEER.

REGISTERED PROFESSIONAL ENGINEER CHRIS S. WARD No. S5400 STRUCTURAL STATE OF CALIFORNIA

LIBERTY HIGH SCHOOL

NEW CLASSROOM BUILDING

850 2nd STREET
BRENTWOOD, CA
94513

LIBERTY UNION HIGH SCHOOL DISTRICT

REVISIONS

DSA APP NO. 01-119994
ARCH PROJECT NO: 1925.00
DRAWN BY:
DRAWING SCALE:
PTN: 61721-83 FILE NO: 7-H4
CONSTRUCTION DOCUMENTS
JUNE 24, 2022

SHEET TITLE

STEEL STAIR AND RAIN CANOPY DETAILS

SHEET NUMBER

S-A5.4

C:\revit_local\21395_Liberty-HS_S21C_matteap.rvt
7/26/2022 10:07:41 AM

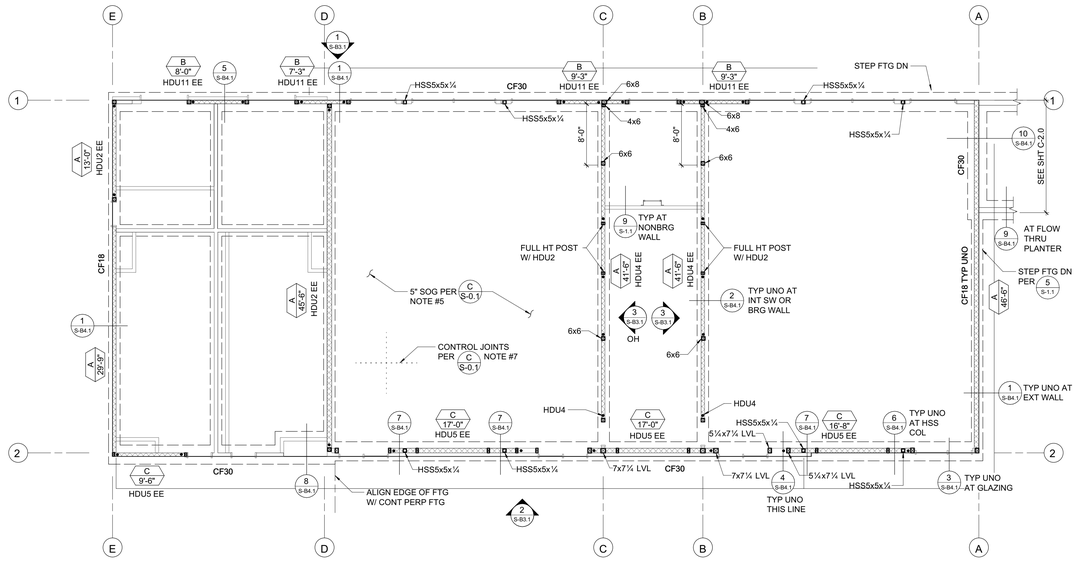

NORTH

FOUNDATION PLAN - BLDG B

1/8" = 1'-0"

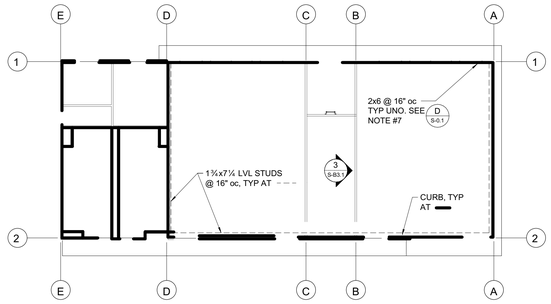

CURB & STUD PLAN BLDG B

1/16" = 1'-0"

FOUNDATION PLAN NOTES:

1. REFER TO SHEETS S0.1, S1.1, S1.2 AND S1.3 FOR GENERAL NOTES AND TYPICAL DETAILS. THE FOLLOWING DETAIL REFERENCES ARE PROVIDED FOR THE CONTRACTOR'S CONVENIENCE ONLY. ALL GENERAL NOTES AND TYPICAL DETAIL SHEETS NOTED ABOVE ARE APPLICABLE AND SHALL BE FOLLOWED.
2. DIMENSIONS ARE TO FACE OF STUD UNLESS NOTED OTHERWISE. COORDINATE ALL DIMENSIONS WITH ARCHITECTURAL DRAWINGS PRIOR TO CONSTRUCTION. NOTIFY ARCHITECT/ENGINEER OF ANY DISCREPANCIES.
3. SEE DETAILS OR CURB PLAN FOR CURB LOCATIONS. COORDINATE WITH ARCHITECTURAL DRAWINGS PRIOR TO CONSTRUCTION. NOTIFY ARCHITECT/ENGINEER OF ANY DISCREPANCIES. PROVIDE LONGER ANCHOR BOLTS AT CURBS PER C/S0.1.
4. ALL EXTERIOR WALLS NOT DESIGNATED AS SHEAR WALLS ON PLANS (INCLUDING WALLS ADJACENT TO SEISMIC GAPS) SHALL BE SHEATHED AS SHEAR WALL TYPE 'A' PER SHEAR WALL SCHEDULE, UNO.
5. PLUMBING AND ELECTRICAL CONDUIT AND GROUND STRAP SHALL NOT BE LAID WITHIN FOUNDATIONS. NO UTILITY PIPES OR CONDUITS SHALL BE LOCATED THRU COLUMN FOOTINGS OR FRAME FOOTINGS. NO PIPES OR CONDUITS THRU SILL PLATES SHALL BE WITHIN 12" OF HOLDOWN BOLTS. NO MECHANICAL, ELECTRICAL, OR PLUMBING OPENINGS SHALL BE LOCATED IN SHEAR WALLS UNLESS SHOWN AND DETAILED ON THE STRUCTURAL DRAWINGS. NO VERTICAL OR HORIZONTAL PIPES OR CONDUITS SHALL BE LOCATED THROUGH STEEL FRAMES, STEEL COLUMNS, OR STEEL BASE PLATES. PROVIDE FURRING AND/OR THICKENED CONCRETE WHERE REQUIRED TO CLEAR UTILITY SYSTEMS. NOTIFY STRUCTURAL ENGINEER/ARCHITECT PRIOR TO ANY INSTALLATION NOT CONFORMING TO THESE DETAILS.
   - PIPES THROUGH FOOTINGS SHALL BE PER 2/S-1.1AND 3/S-1.1.
   - PIPES PARALLEL TO FOOTINGS SHALL BE PER 4/S-1.1
   - PIPES AT SLAB ON GRADE SHALL BE PER 7/S-1.1
   - PIPES THROUGH WOOD FRAMING SHALL BE PER 2/S-1.2AND 5/S-1.3.
6. CONTRACTOR SHALL DETERMINE FOUNDATION STEP LOCATIONS BASED ON GEOTECHNICAL REPORT, CIVIL, ARCHITECTURAL AND LANDSCAPE DRAWINGS. STEP FOOTING PER 5/S-1.1

PLAN LEGEND

SYMBOL	REFERENCE DETAIL AND/OR NOTES	DESCRIPTION
	1/S-1.2	INDICATES STRUCTURAL WALL.
A 10'-0" HDU EE	7/S-1.2 E/S-0.1	INDICATES SHEAR WALL TYPE AND MINIMUM WALL LENGTH. SYMBOL LOCATION INDICATES SHEATHED FACE OF WALL UNLESS NOTED OTHERWISE. HDU WHERE NOTED BELOW OCCURS AT EACH END OF THE WALL.
	D/S-0.1 NOTE #8	INDICATES WOOD POST.
	8/S-1.2	INDICATES POST WITH HOLDOWN. POSTS WITH HOLDOWN ARE FULL HEIGHT FROM SILL TO TOP PLATE.
	6/S-1.3	INDICATES STEEL COLUMN.
		INDICATES FOUNDATION.
CF24		INDICATES CONTINUOUS FOOTING SIZE AND REINFORCING PER SCHEDULE.
DS	8/S-1.1 -/---	INDICATES DEPRESSED SLAB, SEE ARCHITECTURAL AND PLUMBING DRAWINGS FOR COMPLETE LOCATIONS, DEPTH AND SLOPE INFORMATION.
88		INDICATES GRIDLINE AT FACE OF STUD.
1 S3.1		INDICATES ELEVATION.

SHEAR WALL SCHEDULE

SW	APA RATED SHEATHING	NAILING (PEN)	ANCHORAGE ⅝"Ø BOLT FDN 2x SILL	ANCHORAGE ⅝"Ø BOLT FDN 3x SILL	REMARKS
A	15/32" (32/16) EXP 1	10d @ 6"oc	32"oc	48"oc	
B	15/32" (32/16) EXP 1	10d @ 4"oc	24"oc	32"oc	3x MIN AT ALL ADJOINING PANEL EDGES
C	15/32" (32/16) EXP 1	10d @ 3"oc	16"oc	24"oc	

CONTINUOUS FOOTING SCHEDULE

MARK	'b'	'd'	REINF 'a'	NOTES
CF18	18"	24"	(4) #5 T&B	PROVIDE #3 TIES @ 10"oc
CF30	30"	24"	(4) #6 T&B	PROVIDE #3 TIES @ 10"oc
CF60	60"	36"	(9) #8 T&B	PROVIDE #3 TIES @ 16"oc
CF60A	60"	36"	(14) #8 T&B	PROVIDE #3 TIES @ 16"oc
CF84	84"	36"	(14) #8 T&B	PROVIDE #3 TIES @ 16"oc

IDENTIFICATION STAMP
DIV. OF THE STATE ARCHITECT
APP: 01-119994 INC:
REVIEWED FOR
SS ☑ FLS ☑ ACS ☑
DATE: 08/16/2022

QUATTROCCHI KWOK ARCHITECTS
Main Office:
636 Fifth Street, Santa Rosa, CA 95404
East Bay Office:
55 Harrison Street, Suite 525,
Oakland, CA 94607
(707) 576-0829

ZFA STRUCTURAL ENGINEERS
1212 fourth street | suite z zfa.com
santa rosa ca 95404 707.526.0992
zfa job no. 21395 copyright © 2020

THIS DOCUMENT AND THE IDEAS INCORPORATED HEREIN, AS AN INSTRUMENT OF PROFESSIONAL SERVICE, IS THE PROPERTY OF THE ENGINEER AND IS NOT TO BE USED, IN WHOLE OR IN PART FOR ANY OTHER PROJECT WITHOUT THE PRIOR WRITTEN AUTHORIZATION OF THE ENGINEER.

REGISTERED PROFESSIONAL ENGINEER CHRIS S. WARD STRUCTURAL STATE OF CALIFORNIA

LIBERTY HIGH SCHOOL

NEW CLASSROOM BUILDING

850 2nd STREET
BRENTWOOD, CA
94513

LIBERTY UNION HIGH SCHOOL DISTRICT

REVISIONS

DSA APP NO. 01-119994

ARCH PROJECT NO: 1925.00
DRAWN BY:
DRAWING SCALE:
PTN: 61721-83 FILE NO: 7-H4

CONSTRUCTION DOCUMENTS

JUNE 24, 2022

SHEET TITLE

FOUNDATION PLAN - BLDG-B

SHEET NUMBER

S-B2.1

C:\revit_local\21395_Liberty HS_S21C_maksap.rvt
7/26/2022 10:07:43 AM

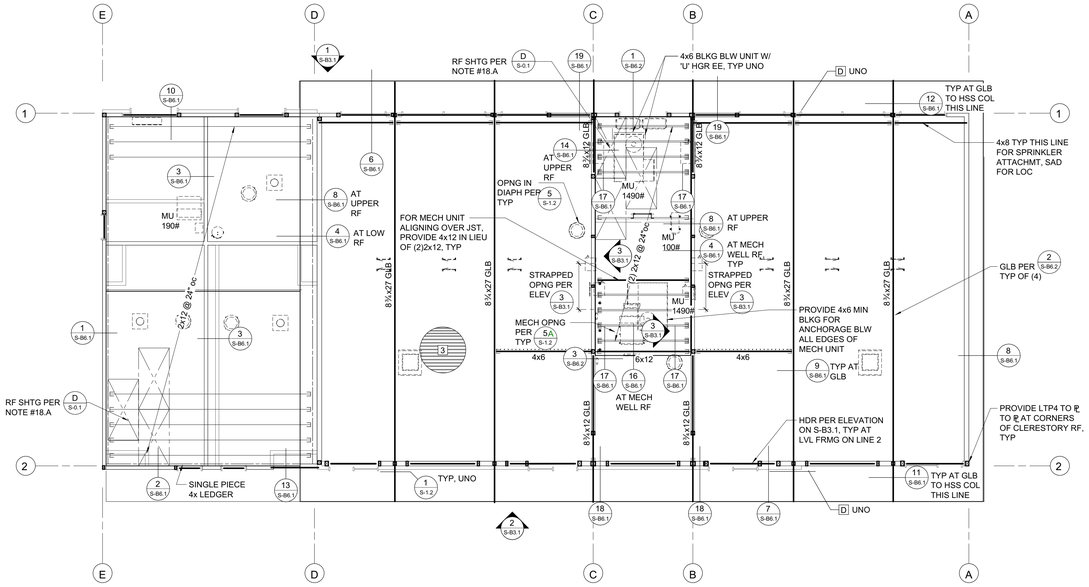

NORTH

ROOF FRAMING PLAN - BLDG-B

1/8" = 1'-0"

FRAMING PLAN NOTES:

1. REFER TO SHEETS S0.1, S1.2 AND S1.3 FOR GENERAL NOTES AND TYPICAL DETAILS. THE FOLLOWING DETAIL REFERENCES ARE PROVIDED FOR THE CONTRACTOR'S CONVENIENCE ONLY. ALL GENERAL NOTES AND TYPICAL DETAIL SHEETS NOTED ABOVE ARE APPLICABLE AND SHALL BE FOLLOWED.
2. DIMENSIONS ARE TO FACE OF STUD UNLESS NOTED OTHERWISE. COORDINATE ALL DIMENSIONS WITH ARCHITECTURAL DRAWINGS PRIOR TO CONSTRUCTION. NOTIFY ARCHITECT/ENGINEER OF ANY DISCREPANCIES.
3. MECHANICAL, ELECTRICAL AND PLUMBING PENETRATIONS THROUGH WALLS, ROOFS OR FLOORS SHALL BE PER REFERENCES BELOW UNLESS SHOWN AND DETAILED OTHERWISE ON THE STRUCTURAL PLANS. NOTIFY ARCHITECT/ENGINEER PRIOR TO ANY INSTALLATION NOT CONFORMING TO THESE DETAILS.

   PENETRATIONS THROUGH SHEAR WALLS SHALL BE PER 6/S-1.2

   PENETRATIONS THROUGH FLOORS/ROOFS SHALL BE PER 5/S-1.2
4. ALL EXTERIOR WALLS NOT DESIGNATED AS SHEAR WALLS ON PLANS (INCLUDING WALLS ADJACENT TO SEISMIC GAPS) SHALL BE SHEATHED AS SHEAR WALL TYPE 'A' PER SHEAR WALL SCHEDULE, UNLESS NOTED OTHERWISE.

PLAN LEGEND

SYMBOL	REFERENCE DETAIL AND/OR NOTES	DESCRIPTION
	1/S-1.2	INDICATES STRUCTURAL WALL.
	D/S-0.1	INDICATES WOOD POST.
•	8/S-1.2	INDICATES POST WITH HOLDOWN. POSTS WITH HOLDOWN ARE FULL HEIGHT FROM SILL TO TOP PLATE.
	6/S-1.3	INDICATES STEEL COLUMN.
3½x12 GLB C=1"	D/S-0.1 NOTE #4	INDICATES GLULAM BEAM SIZE AND CAMBER. WHERE NO CAMBER IS SPECIFIED SEE WOOD FRAMING NOTES FOR TYPICAL GLULAM BEAM CAMBER.
	D/S-0.1 NOTE #11	INDICATES HANGER.
		INDICATES LEDGER. SEE PLAN FOR SIZE AND ANCHORAGE.
88		INDICATES GRIDLINE AT FACE OF STUD.
1 S3.1		INDICATES ELEVATION.
MU 1,000#		INDICATES APPROXIMATE LOCATION, SIZE AND MAXIMUM WEIGHT OF MECHANICAL UNIT. SEE MECHANICAL DRAWINGS FOR ANCHORAGE AND ADDITIONAL INFORMATION.
A	1/S-1.3	INDICATES TOP PLATE SPLICE. SPLICE TYPE SHALL OCCUR ALONG THE ENTIRE LENGTH OF THE WALL, UNO. PROVIDE SPLICE TYPE 'A' IF NOT NOTED ON PLANS.
A	2/S-1.3	INDICATES LEDGER/RIM SPLICE. SPLICE TYPE SHALL OCCUR ALONG THE ENTIRE LENGTH OF THE WALL, UNO. PROVIDE SPLICE TYPE 'A' IF NOT NOTED ON PLANS.
A 4'-0"	3/S-1.3	INDICATES TIE STRAP. SEE SCHEDULE FOR STRAP, NAILING AND LENGTH.
1	1/S-1.4 7/S-1.3	INDICATES METAL DECK AND DIRECTION OF DECK SPAN.

LEDGER SPLICE SCHEDULE

MARK	CASE	STRAP/PLATE	CASE	STRAP/PLATE
A	1	MSTA24	-	
B	1	MSTA30	-	
C	2	MSTI48	3	MSTI60
D	2	CMST14x5'-6"	3	CMST14x6'-0"
E	2	(2) MSTI48	4	@ ¼" W/ (6) 1"Ø MB ES OF SPLICE

TIE STRAP SCHEDULE

MARK	STRAP	MIN. NAILING ES OF •	MAX. NAIL SPACING (SEE NOTES #1 & #2) CASE 1	CASE 2 EL	CASE 2 RL	MIN. END LENGTH (EL)
A	CS16	(10) 10d	10d @ 4"oc STGR	FILL ALL NAIL HOLES	10d @ 4"oc STGR	12"
B	CS14	(13) 10d	10d @ 4"oc STGR	FILL ALL NAIL HOLES	10d @ 4"oc STGR	16"
C	CMSTC16	(25) 10d	10d @ 3"oc STGR	FILL ALL NAIL HOLES	10d @ 3"oc STGR	24"
D	CMST14	(33) 10d	10d @ 3½"oc STGR	FILL ALL NAIL HOLES	10d @ 3½"oc STGR	32"
E	CMST12	(43) 10d	10d @ 3½"oc STGR	FILL ALL NAIL HOLES	10d @ 3½"oc STGR	48"

1. CASE 1 APPLIES UNLESS END LENGTH (EL) IS NOTED ON PLANS. WHERE END LENGTH (EL) IS NOTED, SEE CASE 2.
2. AS REQUIRED, PROVIDE CLOSER NAIL SPACING TO MEET MINIMUM NAILING EACH SIDE OF • (DENOTES MIDPOINT OF STRAP).
3. EL = END LENGTH, RL = REMAINDER LENGTH OF STRAP. SEE 3/S-1.3

TOP PLATE SPLICE SCHEDULE

MARK	LAP SPLICE (CASE 1)	STRAP SPLICE (CASE 2)
A	(12) 16d PER 4'-0" MIN LAP	MSTC28
B	(22) 16d PER 4'-0" MIN LAP	MSTC40
C	(26) 16d PER 6'-0" MIN LAP	MSTC52
D	N / A	CMST14 x 6'-0"

UNLESS OTHERWISE NOTED, FILL ALL HOLES WITH NAILS. SEE NOTE #14.

IDENTIFICATION STAMP
DIV. OF THE STATE ARCHITECT
APP: 01-119994 INC:
REVIEWED FOR
SS ☑ FLS ☑ ACS ☑
DATE: 08/16/2022

QUATTROCCHI KWOK ARCHITECTS

Main Office:
636 Fifth Street, Santa Rosa, CA 95404
East Bay Office:
55 Harrison Street, Suite 525,
Oakland, CA 94607
(707) 576-0829

ZFA STRUCTURAL ENGINEERS
1212 fourth street | suite z — zfa.com
santa rosa ca 95404 — 707.526.0992
zfa job no. 21395

copyright © 2020

THIS DOCUMENT AND THE IDEAS INCORPORATED HEREIN, AS AN INSTRUMENT OF PROFESSIONAL SERVICE, IS THE PROPERTY OF THE ENGINEER AND IS NOT TO BE USED, IN WHOLE OR IN PART FOR ANY OTHER PROJECT WITHOUT THE PRIOR WRITTEN AUTHORIZATION OF THE ENGINEER.

REGISTERED PROFESSIONAL ENGINEER — CHRIS S. WARD — STRUCTURAL — STATE OF CALIFORNIA

LIBERTY HIGH SCHOOL

NEW CLASSROOM BUILDING

850 2nd STREET
BRENTWOOD, CA
94513

LIBERTY UNION HIGH SCHOOL DISTRICT

REVISIONS

DSA APP NO. 01-119994
ARCH PROJECT NO: 1925.00
DRAWN BY:
DRAWING SCALE:
PTN: 61721-83 FILE NO: 7-H4
CONSTRUCTION DOCUMENTS
JUNE 24, 2022

SHEET TITLE
ROOF FRAMING PLAN - BLDG-B

SHEET NUMBER
S-B2.2

C:\revit_local\21395_Liberty HS_S21C_maleap.rvt
7/26/2022 10:07:45 AM

FRAMING ELEVATION NOTES:

1. ELEVATIONS ARE SCHEMATIC. SEE PLANS FOR ADDITIONAL INFORMATION.
2. SEE PLANS FOR ALL COLUMN AND BEAM SIZES.
3. SEE SHEET S1.2 & S1.3 FOR TYPICAL FRAMING DETAILS.
4. SAD FOR FRAMING HEIGHTS, BEAM SLOPES AND ALL DIMENSIONS.

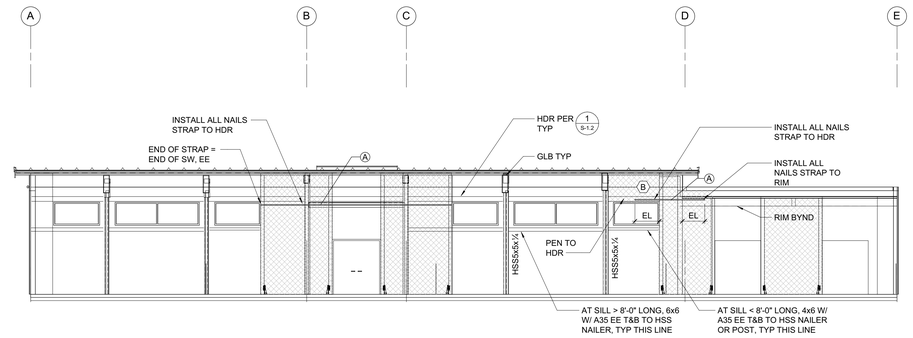

1 FRAMING ELEVATION GL 1
1/8" = 1'-0"

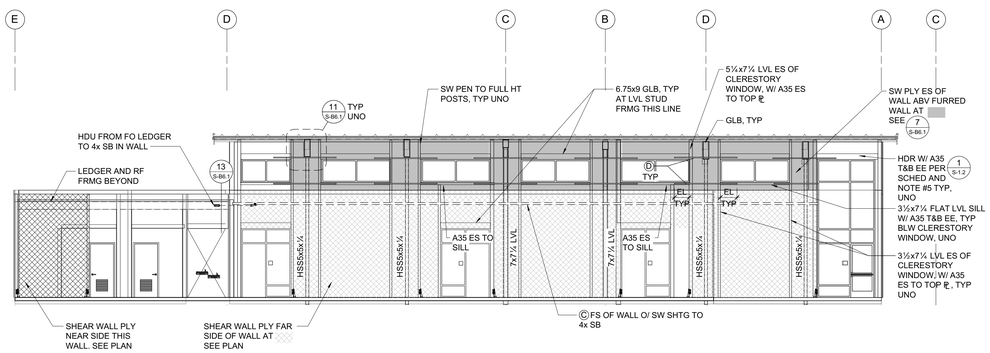

2 FRAMING ELEVATION GL 2
1/8" = 1'-0"

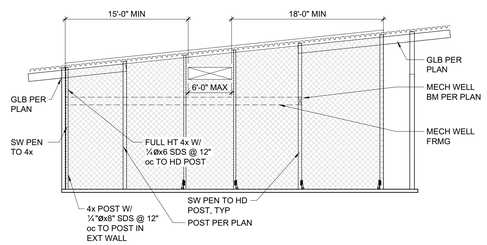

3 FRAMING ELEVATION LINES C & D
1/8" = 1'-0"

SHEAR WALL SCHEDULE

SW	APA RATED SHEATHING	NAILING (PEN)	ANCHORAGE ½"ø BOLT FDN 2x SILL	ANCHORAGE ½"ø BOLT FDN 3x SILL	REMARKS
Ⓐ	15/32" (32/16) EXP 1	10d @ 6"oc	32"oc	48"oc	
Ⓑ	15/32" (32/16) EXP 1	10d @ 4"oc	24"oc	32"oc	3x MIN AT ALL ADJOINING PANEL EDGES
Ⓒ	15/32" (32/16) EXP 1	10d @ 3"oc	16"oc	24"oc	

TIE STRAP SCHEDULE

MARK	STRAP	MIN. NAILING ES OF ♦	MAX. NAIL SPACING (SEE NOTES #1 & #2) CASE 1	CASE 2 EL	CASE 2 RL	MIN. END LENGTH (EL)
Ⓐ	CS16	(10) 10d	10d @ 4"oc STGR	FILL ALL NAIL HOLES	10d @ 4"oc STGR	12"
Ⓑ	CS14	(13) 10d	10d @ 4"oc STGR	FILL ALL NAIL HOLES	10d @ 4"oc STGR	16"
Ⓒ	CMSTC16	(25) 10d	10d @ 3"oc STGR	FILL ALL NAIL HOLES	10d @ 3"oc STGR	24"
Ⓓ	CMST14	(33) 10d	10d @ 3½"oc STGR	FILL ALL NAIL HOLES	10d @ 3½"oc STGR	32"
Ⓔ	CMST12	(43) 10d	10d @ 3½"oc STGR	FILL ALL NAIL HOLES	10d @ 3½"oc STGR	48"

1. CASE 1 APPLIES UNLESS END LENGTH (EL) IS NOTED ON PLANS. WHERE END LENGTH (EL) IS NOTED, SEE CASE 2.
2. AS REQUIRED, PROVIDE CLOSER NAIL SPACING TO MEET MINIMUM NAILING EACH SIDE OF ♦ (DENOTES MIDPOINT OF STRAP).
3. EL = END LENGTH. RL = REMAINING LENGTH OF STRAP. SEE 3/S-1.3

IDENTIFICATION STAMP
DIV. OF THE STATE ARCHITECT
APP: 01-119994 INC:
REVIEWED FOR
SS ☑ FLS ☑ ACS ☑
DATE: 08/16/2022

QUATTROCCHI KWOK ARCHITECTS
Main Office:
636 Fifth Street, Santa Rosa, CA 95404
East Bay Office:
55 Harrison Street, Suite 525,
Oakland, CA 94607
(707) 576-0829

ZFA STRUCTURAL ENGINEERS
1212 fourth street | suite z
santa rosa ca 95404
zfa job no. 21395
zfa.com
707.526.0992

copyright © 2020

THIS DOCUMENT AND THE IDEAS INCORPORATED HEREIN, AS AN INSTRUMENT OF PROFESSIONAL SERVICE, IS THE PROPERTY OF THE ENGINEER AND IS NOT TO BE USED, IN WHOLE OR IN PART FOR ANY OTHER PROJECT WITHOUT THE PRIOR WRITTEN AUTHORIZATION OF THE ENGINEER.

REGISTERED PROFESSIONAL ENGINEER CHRIS S. WARD STRUCTURAL STATE OF CALIFORNIA

LIBERTY HIGH SCHOOL

NEW CLASSROOM BUILDING

850 2nd STREET
BRENTWOOD, CA
94513

LIBERTY UNION HIGH SCHOOL DISTRICT

REVISIONS

DSA APP NO. 01-119994
ARCH PROJECT NO: 1925.00
DRAWN BY:
DRAWING SCALE:
PTN: 61721-83 FILE NO: 7-H4
CONSTRUCTION DOCUMENTS
JUNE 24, 2022

SHEET TITLE
ELEVATIONS & SCHEDULES

SHEET NUMBER
S-B3.1

C:\revit_local\21395_Liberty HS_S21C_matsap.rvt
7/26/2022 10:07:48 AM

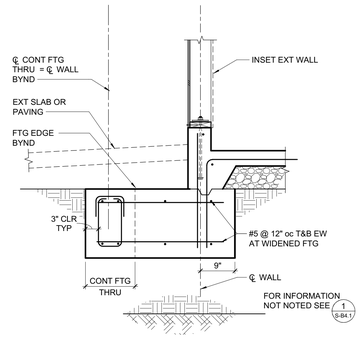

8 EXTERIOR FOOTING AT INSET WALL
3/4" = 1'-0"

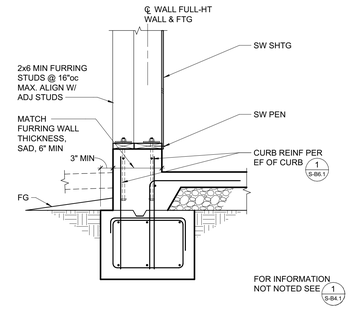

4 EXTERIOR FOOTING WITH FURRING WALL AT LINE 2
3/4" = 1'-0"

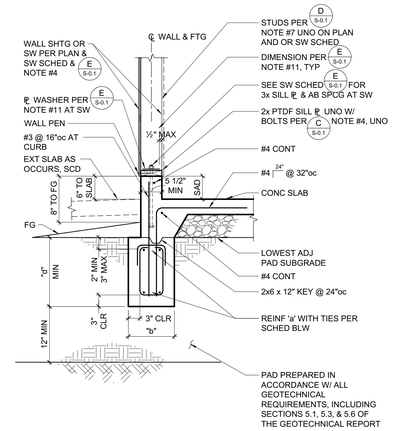

1 TYPICAL EXTERIOR FOOTING
3/4" = 1'-0"

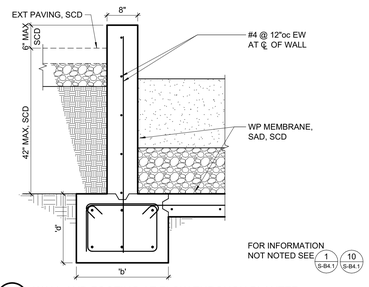

9 WALL AND FOOTING AT FLOW THROUGH PLANTER
3/4" = 1'-0"

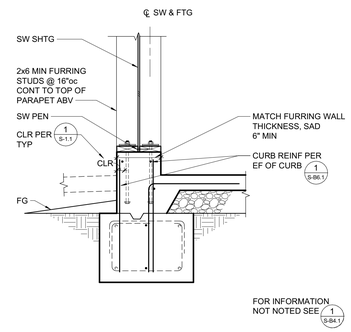

5 EXTERIOR WITH FURRING WALL AT LINE 1
3/4" = 1'-0"

CONTINUOUS FOOTING SCHEDULE

MARK	'b'	'd'	REINF 'a'	NOTES
CF18	18"	24"	(4) #5 T&B	PROVIDE #3 TIES @ 10"oc
CF30	30"	24"	(4) #6 T&B	PROVIDE #3 TIES @ 10"oc
CF60	60"	36"	(9) #8 T&B	PROVIDE #3 TIES @ 16"oc
CF60A	60"	36"	(14) #8 T&B	PROVIDE #3 TIES @ 16"oc
CF84	84"	36"	(14) #8 T&B	PROVIDE #3 TIES @ 16"oc

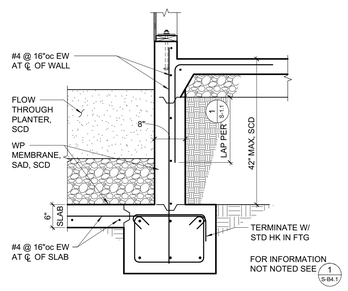

10 BUILDING FOOTING AT FLOW THROUGH PLANTER
3/4" = 1'-0"

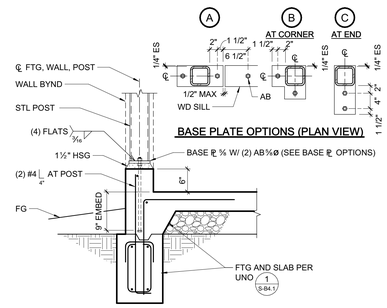

6 HSS COLUMN AT CURB
3/4" = 1'-0"

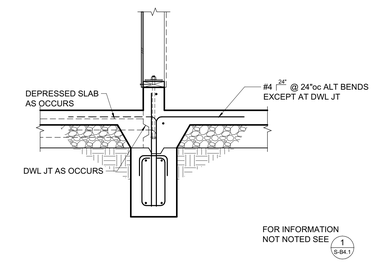

2 INTERIOR FOOTING AT CURB
3/4" = 1'-0"

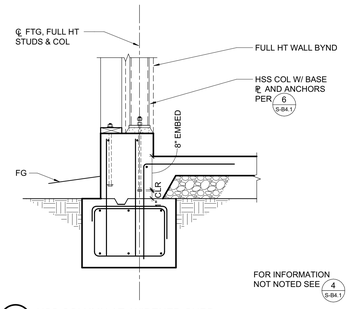

7 HSS COLUMN AT WIDENED CURB
3/4" = 1'-0"

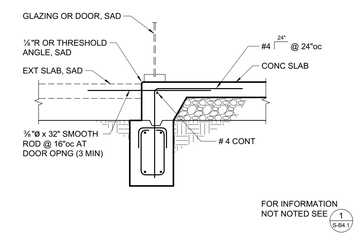

3 FOOTING AT GLAZING OR DOOR
3/4" = 1'-0"

IDENTIFICATION STAMP
DIV. OF THE STATE ARCHITECT
APP: 01-119994 INC:
REVIEWED FOR
SS ☑ FLS ☑ ACS ☑
DATE: 08/16/2022

QUATTROCCHI KWOK ARCHITECTS
Main Office:
636 Fifth Street, Santa Rosa, CA 95404
East Bay Office:
55 Harrison Street, Suite 525,
Oakland, CA 94607
(707) 576-0829

ZFA STRUCTURAL ENGINEERS
1212 fourth street | suite z zfa.com
santa rosa ca 95404 707.526.0992
zfa job no. 21395
copyright © 2020

THIS DOCUMENT AND THE IDEAS INCORPORATED HEREIN, AS AN INSTRUMENT OF PROFESSIONAL SERVICE, IS THE PROPERTY OF THE ENGINEER AND IS NOT TO BE USED, IN WHOLE OR IN PART FOR ANY OTHER PROJECT WITHOUT THE PRIOR WRITTEN AUTHORIZATION OF THE ENGINEER.

REGISTERED PROFESSIONAL ENGINEER CHARLES S. WARREN No. S5802 STRUCTURAL STATE OF CALIFORNIA

LIBERTY HIGH SCHOOL

NEW CLASSROOM BUILDING

850 2nd STREET
BRENTWOOD, CA
94513

LIBERTY UNION HIGH SCHOOL DISTRICT

REVISIONS

DSA APP NO. 01-119994
ARCH PROJECT NO: 1925.00
DRAWN BY:
DRAWING SCALE:
PTN: 61721-83 FILE NO: 7-H4
CONSTRUCTION DOCUMENTS
JUNE 24, 2022

SHEET TITLE
FOUNDATION DETAILS

SHEET NUMBER
S-B4.1

C:\revit_local\21395_Liberty HS_S21C_maksap.rvt
7/26/2022 10:07:50 AM

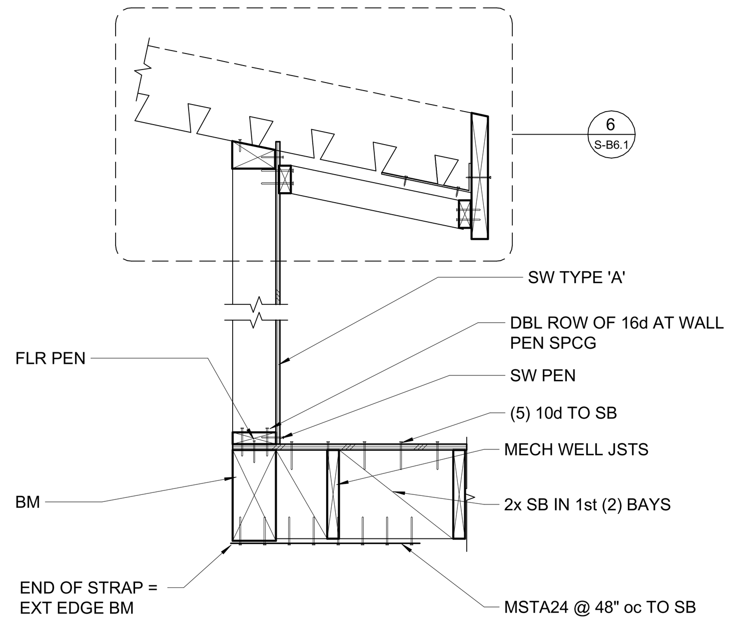

16 MECHANICAL WELL WALL
3/4" = 1'-0"

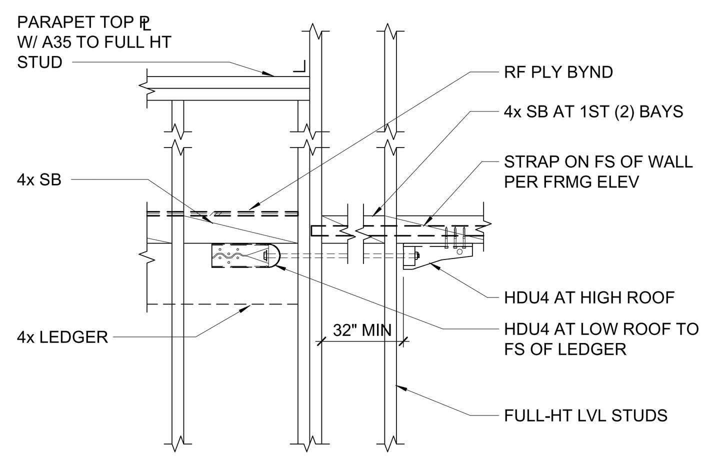

A

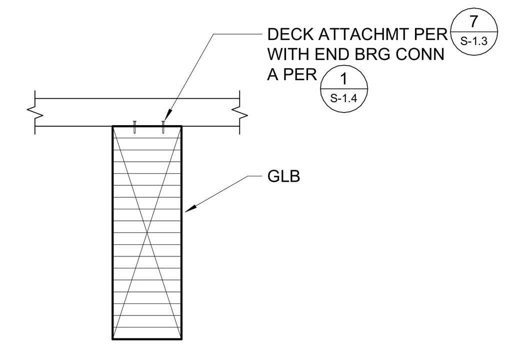

9 DECK AT GLB
3/4" = 1'-0"

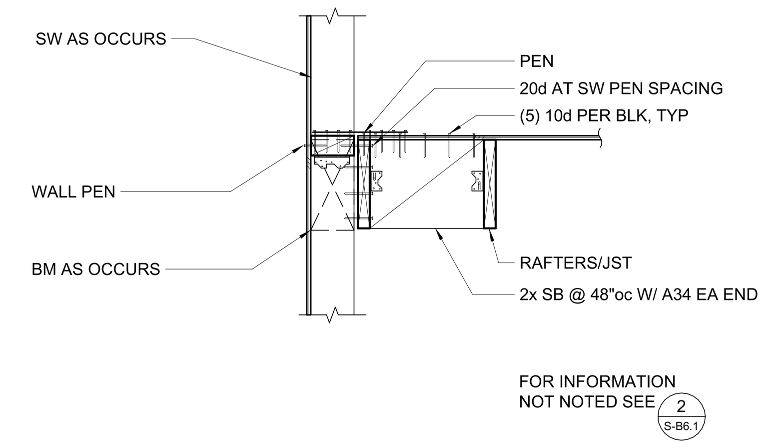

5 PARALLEL FRAMING AT EXTERIOR WALL
3/4" = 1'-0"

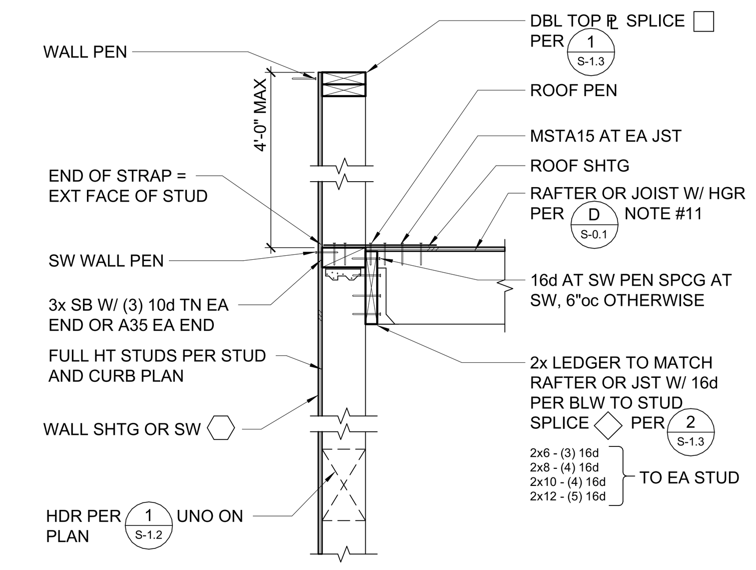

1 WALL ANCHORAGE AT EXTERIOR WALL
3/4" = 1'-0"

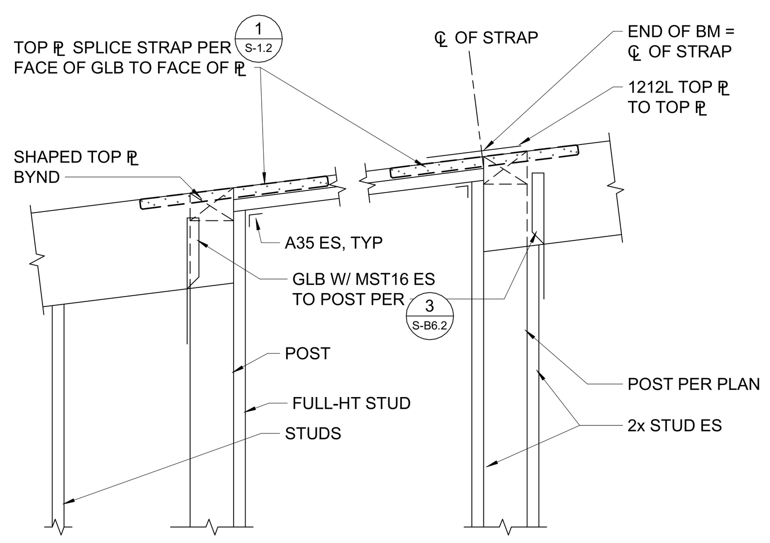

17 GLULAM BEAM AT MECH WELL WALL
3/4" = 1'-0"

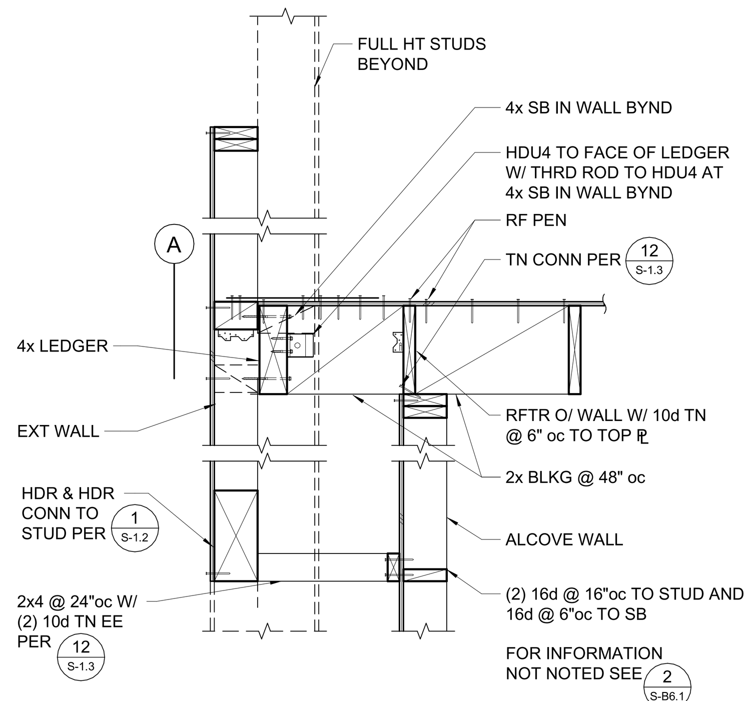

13 WALL TIE
3/4" = 1'-0"

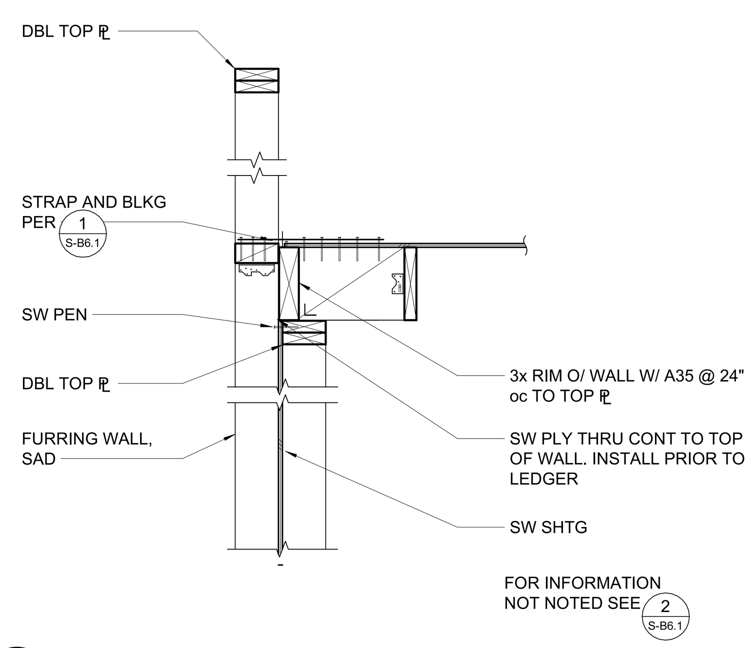

10 FRAMING AT EXTERIOR PARAPET AND FURRING WALL
3/4" = 1'-0"

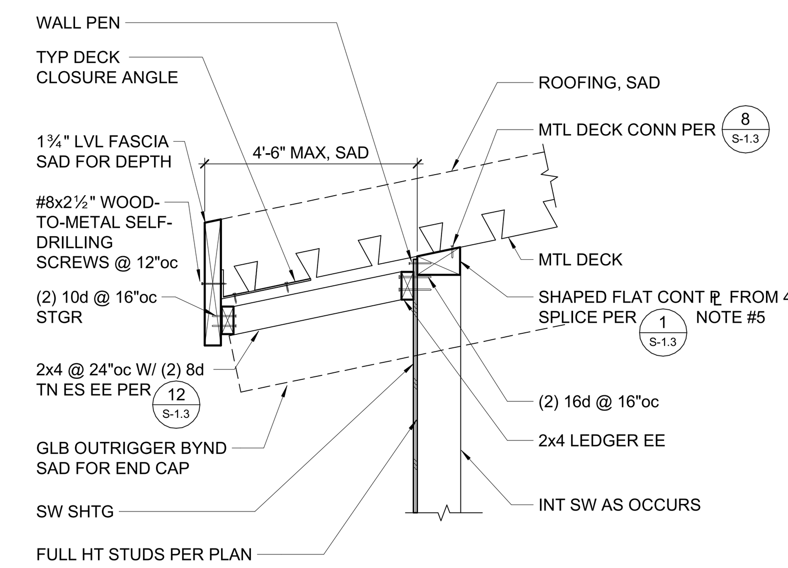

6 HIGH ROOF EAVE FRAMING
3/4" = 1'-0"

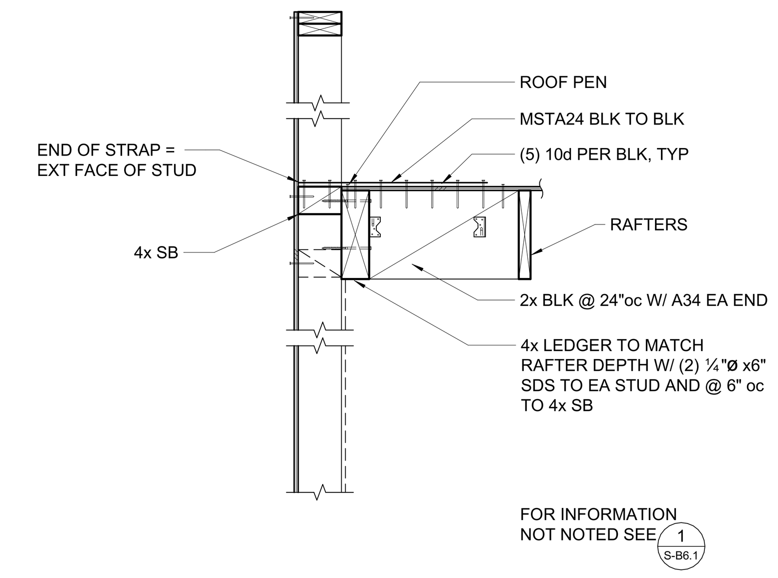

2 PARALLEL FRAMING AT EXTERIOR WALL
3/4" = 1'-0"

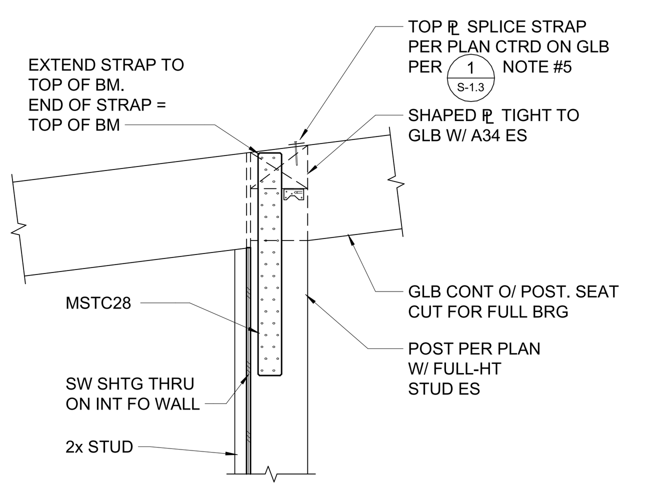

18 GLULAM BEAM AT EXTERIOR WALL
3/4" = 1'-0"

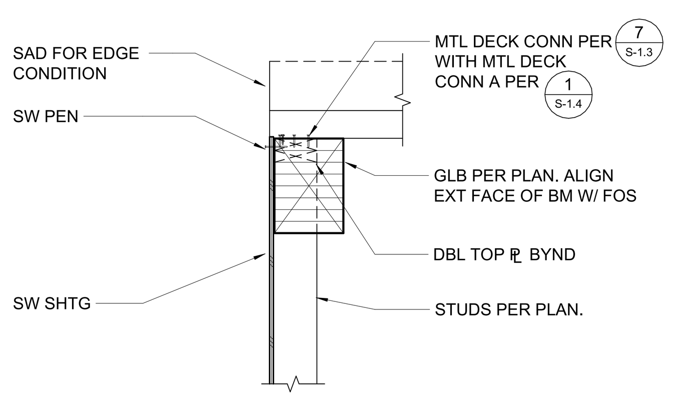

14 HIGH ROOF GLULAM AT MECH ANICAL WELL
3/4" = 1'-0"

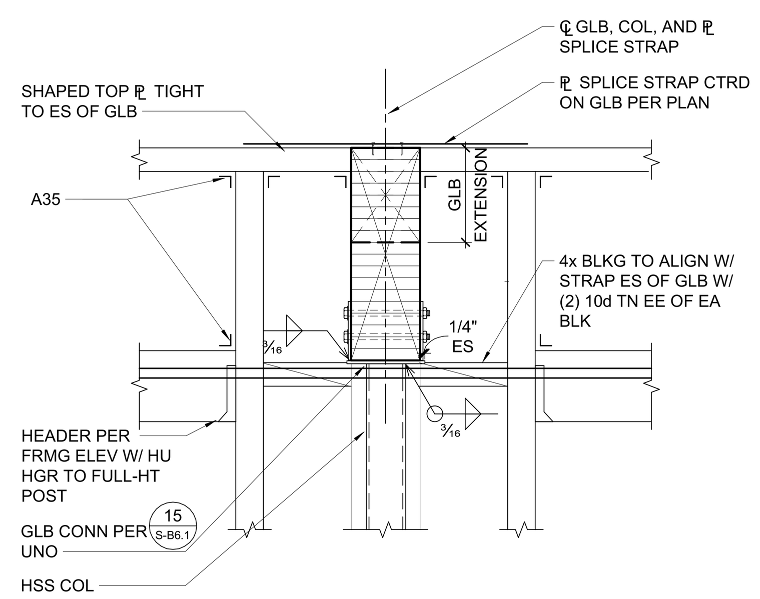

11 GLULAM AT HSS COLUMN ON LINE 2
3/4" = 1'-0"

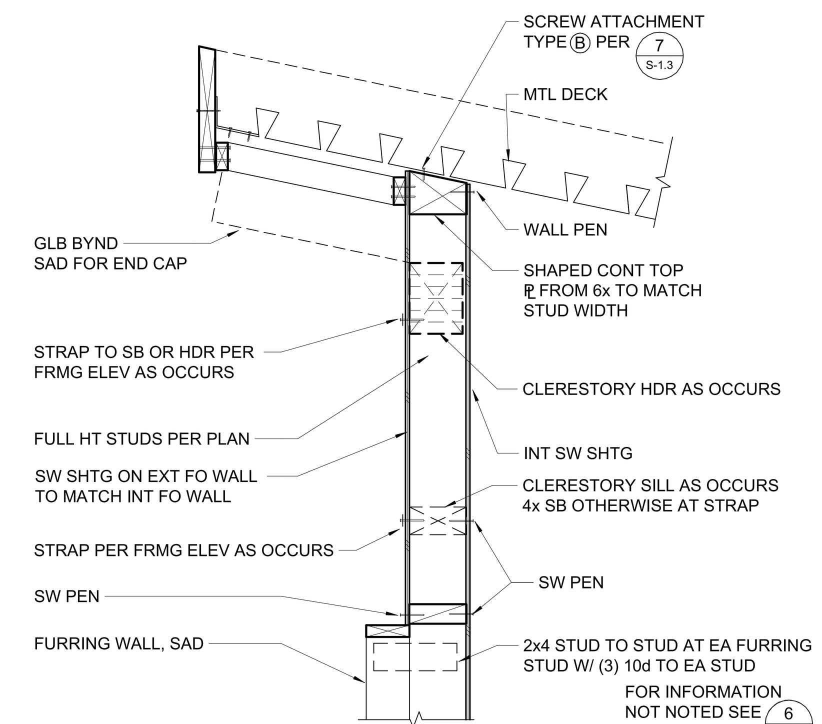

7 HIGH ROOF EAVE FRAMING
3/4" = 1'-0"

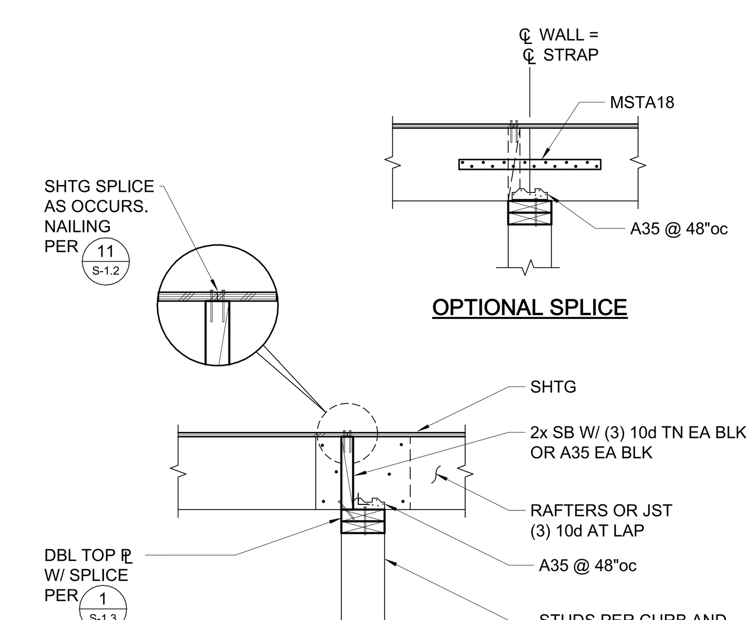

3 INTERIOR BEARING WALL
3/4" = 1'-0"

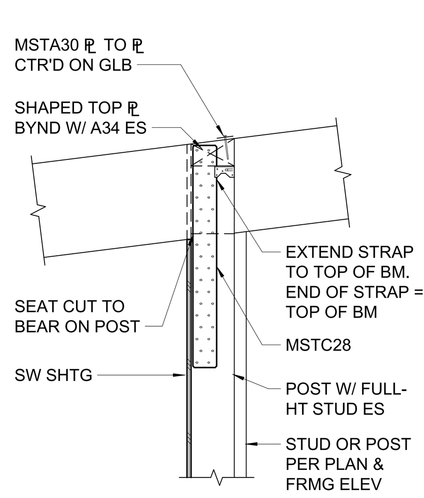

19 GLULAM BEAM AT EXTERIOR WALL
3/4" = 1'-0"

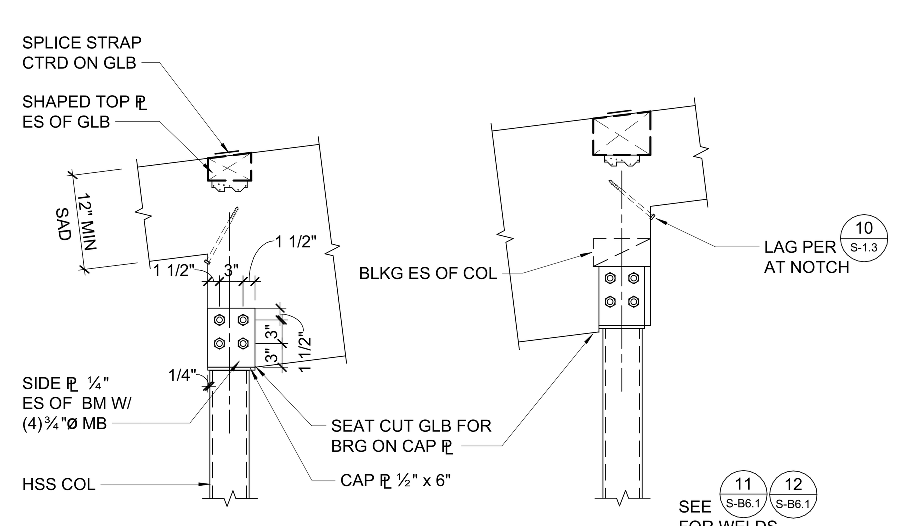

A AT LOWER EAVE

B AT UPPER EAVE

15 GLULAM BEAM AT HSS COLUMN
3/4" = 1'-0"

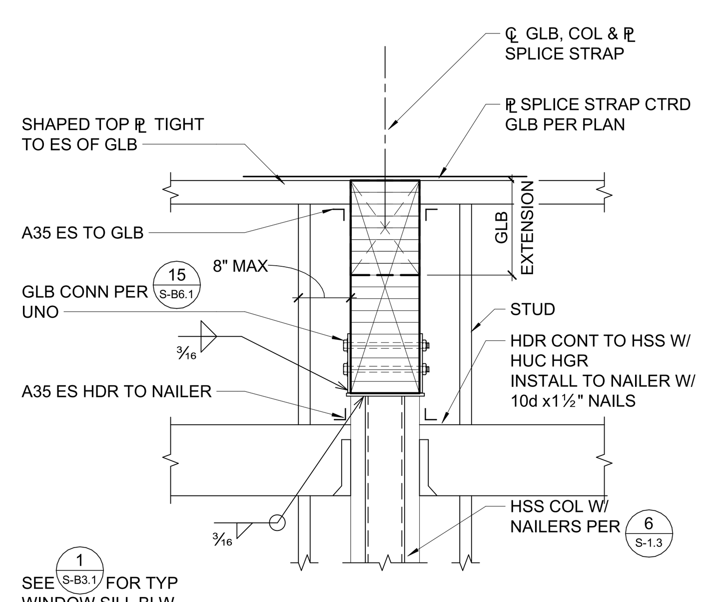

12 GLULAM BEAM AT HSS COLUMN ON LINE 1
3/4" = 1'-0"

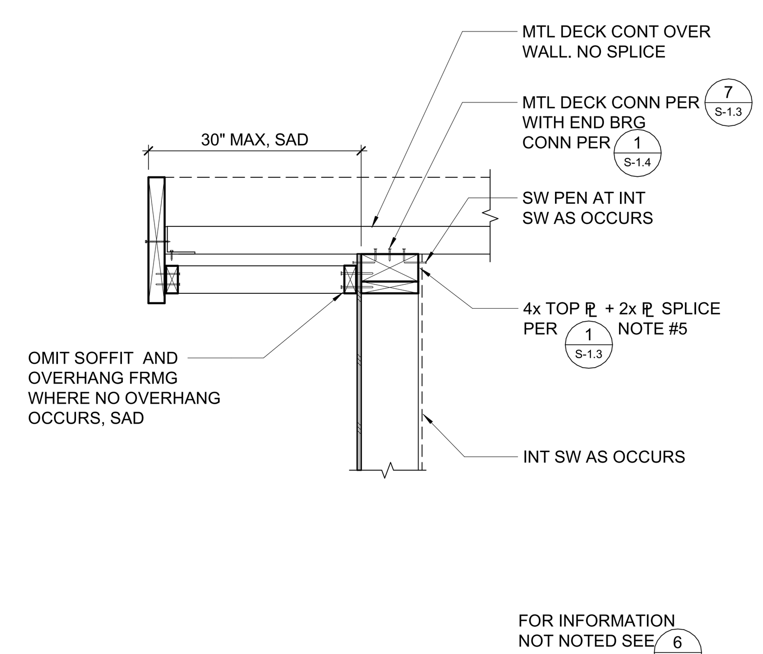

8 HIGH ROOF RAKE FRAMING
3/4" = 1'-0"

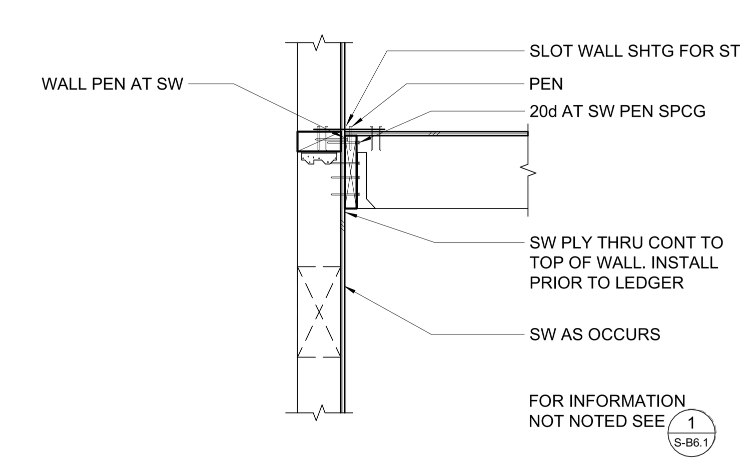

4 LEDGER AT EXTERIOR SHEAR WALL
3/4" = 1'-0"

IDENTIFICATION STAMP
DIV. OF THE STATE ARCHITECT
APP: 01-119994 INC:
REVIEWED FOR
SS ☑ FLS ☑ ACS ☑
DATE: 08/16/2022

QUATTROCCHI KWOK ARCHITECTS
Main Office:
636 Fifth Street, Santa Rosa, CA 95404
East Bay Office:
55 Harrison Street, Suite 525,
Oakland, CA 94607
(707) 576-0829

ZFA STRUCTURAL ENGINEERS
1212 fourth street | suite z
santa rosa ca 95404
zfa job no. 21395
zfa.com
707.526.0992
copyright © 2020

THIS DOCUMENT AND THE IDEAS INCORPORATED HEREIN, AS AN INSTRUMENT OF PROFESSIONAL SERVICE, IS THE PROPERTY OF THE ENGINEER AND IS NOT TO BE USED, IN WHOLE OR IN PART FOR ANY OTHER PROJECT WITHOUT THE PRIOR WRITTEN AUTHORIZATION OF THE ENGINEER.

REGISTERED PROFESSIONAL ENGINEER CHRIS S. WARNER No. S4613 STRUCTURAL STATE OF CALIFORNIA

LIBERTY HIGH SCHOOL

NEW CLASSROOM BUILDING

850 2nd STREET
BRENTWOOD, CA
94513

LIBERTY UNION HIGH SCHOOL DISTRICT

REVISIONS

DSA APP NO. 01-119994
ARCH PROJECT NO: 1925.00
DRAWN BY:
DRAWING SCALE:
PTN: 61721-83 FILE NO: 7-H4
CONSTRUCTION DOCUMENTS
JUNE 24, 2022

SHEET TITLE

WOOD DETAILS

SHEET NUMBER

S-B6.1

C:\revit_local\21395_Liberty HS_S21C_mateap.rvt
7/26/2022 10:07:52 AM

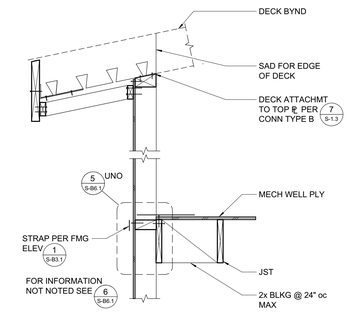

1 EAVE AT MECHANICAL WELL
3/4" = 1'-0"

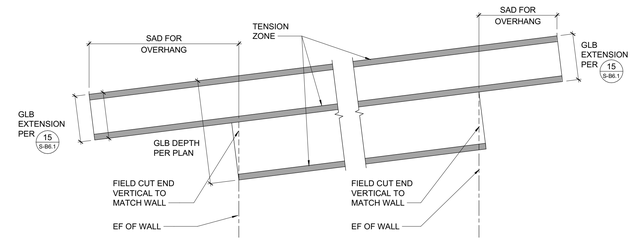

2 SHAPED GLB
3/4" = 1'-0"

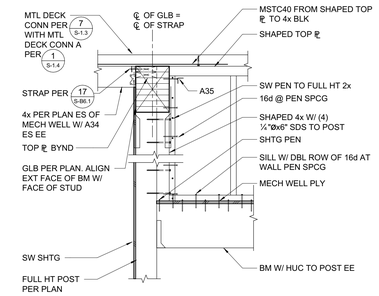

3 SHEAR TRANSFER AT MECHANICAL WELL
3/4" = 1'-0"

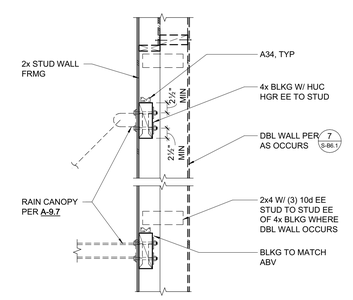

4 RAIN CANOPY SUPPORT
3/4" = 1'-0"

IDENTIFICATION STAMP
DIV. OF THE STATE ARCHITECT
APP: 01-119994 INC:
REVIEWED FOR
SS ☑ FLS ☑ ACS ☑
DATE: 08/16/2022

QUATTROCCHI KWOK ARCHITECTS
Main Office:
636 Fifth Street, Santa Rosa, CA 95404
East Bay Office:
55 Harrison Street, Suite 525,
Oakland, CA 94607
(707) 576-0829

ZFA STRUCTURAL ENGINEERS
1212 fourth street | suite z
santa rosa ca 95404
zfa job no. 21395
zfa.com
707.526.0992
copyright © 2020

THIS DOCUMENT AND THE IDEAS INCORPORATED HEREIN, AS AN INSTRUMENT OF PROFESSIONAL SERVICE, IS THE PROPERTY OF THE ENGINEER AND IS NOT TO BE USED, IN WHOLE OR IN PART FOR ANY OTHER PROJECT WITHOUT THE PRIOR WRITTEN AUTHORIZATION OF THE ENGINEER.

REGISTERED PROFESSIONAL ENGINEER
CHRIS S. WARD
No. S6 S6 S6
STRUCTURAL
STATE OF CALIFORNIA

LIBERTY HIGH SCHOOL

NEW CLASSROOM BUILDING

850 2nd STREET
BRENTWOOD, CA
94513

LIBERTY UNION HIGH SCHOOL DISTRICT

REVISIONS

DSA APP NO. 01-119994
ARCH PROJECT NO: 1925.00
DRAWN BY:
DRAWING SCALE:
PTN: 61721-83 FILE NO: 7-H4
CONSTRUCTION DOCUMENTS
JUNE 24, 2022

SHEET TITLE
WOOD DETAILS

SHEET NUMBER
S-B6.2

C:\revit_local\21395_Liberty HS_S21C_mateap.rvt
7/26/2022 10:07:52 AM

ROOF TOP HEAT PUMP UNIT SCHEDULE

MARK	MFR.	MODEL NO.	AIRFLOW.	E.S.P (In W.G)	FAN RPM	UNIT CAPACITIES (MBH) HEATING	COOLING	EER.	OSA (MIN/MAX)	ELECTRICAL DATA: UNIT ELECTRICAL DATA V-Ø-HZ	MCA	MOCP	POWER EXHAUST ELECTRICAL DATA V-Ø-Hz	FLA	MCA	MOCP	AUX. HEAT (KW)	UNIT WEIGHT	CURB WEIGHT	ECONOMIZER WEIGHT	TOTAL WEIGHT	SERVICE	REMARKS
HP-A101	CARRIER	50GCQM05A2M6-0A3A0	1600	1.00	1990	45.6	48.2	10.44	130/350	460-3-60	30	30	460-3-60	1.4	1.8	3.2	10.6	618	365	189	1472	CLASSROOM A101	1, 2, 3, 4, 5
HP-A102	CARRIER	50GCQM05A2M6-0A3A0	1600	1.00	1990	45.6	48.2	10.44	140/350	460-3-60	30	30	460-3-60	1.4	1.8	3.2	10.6	618	365	189	1472	CLASSROOM A102	1, 2, 3, 4, 5
HP-A103	CARRIER	50GCQM05A2M6-0A3A0	1600	1.00	1990	45.6	48.2	10.44	140/350	460-3-60	30	30	460-3-60	1.4	1.8	3.2	10.6	618	365	189	1472	CLASSROOM A103	1, 2, 3, 4, 5
HP-A104	CARRIER	50GCQM05A2M6-0A3A0	1600	1.00	1990	45.6	48.2	10.44	140/350	460-3-60	30	30	460-3-60	1.4	1.8	3.2	10.6	618	365	189	1472	CLASSROOM A104	1, 2, 3, 4, 5
HP-A105	CARRIER	50GCQM05A2M6-0A3A0	1600	1.00	1990	45.6	48.2	10.44	140/350	460-3-60	30	30	460-3-60	1.4	1.8	3.2	10.6	618	365	189	1472	CLASSROOM A105	1, 2, 3, 4, 5
HP-A106	CARRIER	50GCQM05A2M6-0A3A0	1600	1.00	1990	45.6	48.2	10.44	150/375	460-3-60	30	30	460-3-60	1.4	1.8	3.2	10.6	618	365	189	1472	CLASSROOM A106	1, 2, 3, 4, 5
HP-A109	CARRIER	50GCQM05A2M6-0A3A0	1600	1.00	1990	45.6	48.2	10.44	150/375	460-3-60	30	30	460-3-60	1.4	1.8	3.2	10.6	618	365	189	1472	SPECIAL DAY CR A110	1, 2, 3, 4, 5
HP-A110	CARRIER	50GCQM05A2M6-0A3A0	1600	1.00	1990	45.6	48.2	10.44	150/375	460-3-60	30	30	460-3-60	1.4	1.8	3.2	10.6	618	365	189	1472	CLASSROOM A111	1, 2, 3, 4, 5
HP-A201	CARRIER	50GCQM05A2M6-0A3A0	1600	1.00	1990	45.6	48.2	10.44	135/350	460-3-60	30	30	N/A	N/A	N/A	N/A	10.6	618	365	49	1032	CLASSROOM A201	2, 3, 4, 5
HP-A202	CARRIER	50GCQM05A2M6-0A3A0	1600	1.00	1990	45.6	48.2	10.44	135/350	460-3-60	30	30	N/A	N/A	N/A	N/A	10.6	618	365	49	1032	CLASSROOM A202	2, 3, 4, 5
HP-A203	CARRIER	50GCQM05A2M6-0A3A0	1600	1.00	1990	45.6	48.2	10.44	135/350	460-3-60	30	30	N/A	N/A	N/A	N/A	10.6	618	365	49	1032	CLASSROOM A203	2, 3, 4, 5
HP-A204	CARRIER	50GCQM05A2M6-0A3A0	1600	1.00	1990	45.6	48.2	10.44	135/350	460-3-60	30	30	N/A	N/A	N/A	N/A	10.6	618	365	49	1032	CLASSROOM A204	2, 3, 4, 5
HP-A205	CARRIER	50GCQM05A2M6-0A3A0	1600	1.00	1990	45.6	48.2	10.44	135/350	460-3-60	30	30	N/A	N/A	N/A	N/A	10.6	618	365	49	1032	CLASSROOM A205	2, 3, 4, 5
HP-A206	CARRIER	50GCQM05A2M6-0A3A0	1600	1.00	1990	45.6	48.2	10.44	135/350	460-3-60	30	30	N/A	N/A	N/A	N/A	10.6	618	365	49	1032	CLASSROOM A206	2, 3, 4, 5
HP-A208	CARRIER	50GCQM04A2M6-0A3A0	1200	1.00	2077	34.3	35.9	10.62	125/325	460-3-60	23	25	N/A	N/A	N/A	N/A	8.1	503	365	49	1032	FLEXIBLE OFFICES A208B & STAFF BREAK ROOM A208	2, 3, 4, 5
HP-A209	CARRIER	50GCQM05A2M6-0A3A0	1600	1.00	1990	45.6	48.2	10.44	135/350	460-3-60	30	30	N/A	N/A	N/A	N/A	10.6	618	365	49	1032	CLASSROOM A209	2, 3, 4, 5
HP-A210	CARRIER	50GCQM05A2M6-0A3A0	1600	1.00	1990	45.6	48.2	10.44	135/350	460-3-60	30	30	N/A	N/A	N/A	N/A	10.6	618	365	49	1032	CLASSROOM A210	2, 3, 4, 5
HP-B101	CARRIER	50GCQM06A2M6-0A3A0	2000	1.00	2170	55.9	62.3	10.80	250/625	460-3-60	34	40	N/A	N/A	N/A	N/A	10.6	628	365	189	1482	CLASSROOM B101	2, 3, 4, 5
HP-B103	CARRIER	50GCQM06A2M6-0A3A0	2000	1.00	2170	55.9	62.3	10.80	250/625	460-3-60	34	40	N/A	N/A	N/A	N/A	10.6	628	365	189	1482	CLASSROOM B103	2, 3, 4, 5

REMARKS:
1. PROVIDE MODULATING POWER EXHAUST WITH SEPERATE ELECTRICAL CONNECTION DISCONNECT AND VFD
2. PROVIDE WITH SINGLE POINT CONNECTION WITH ELECTRICAL CONNECTION DISCONNECT
3. PROVIDE WITH PELICAN THERMOSTAT WITH CO2 SENSOR FOR DEMAND CONTROL VENTILATION
4. PROVIDE WITH MICROMETL SPRING ISOLATED ROOF CURBS AND ULTRA LOW LEAK ECONOMIZER DAMPERS WITH BELIMO ACTUATORS
5. PROVIDE WITH (2) LAYERS OF HUSH CORE CURB SOUND ATTUENATION SEE DETAIL A/M3.1

EXHAUST FAN SCHEDULE

MARK	MFR	MODEL NO	AIRFLOW	ESP	FAN RPM	INLET SONES	MOTOR HP	ELECTRICAL DATA: OPER. HP	WATTS	V-Ø-Hz	MCA	MOCP	FLA	WEIGHT	SERVICE	REMARKS
EF 106-A	PANASONIC	FV-1115VK2	150 CFM	0.25 in-wg	684	0.3			13 W	120-1-60			0.2 A	12 lb	TOILET A106A	1,2,4
EF 109-A	FANTECH	DBF 4XLT	173 CFM	0.25 in-wg	2559				72 W	120-1-60				8 lb	LAUNDRY A109	5
EF 110-A	PANASONIC	FV-1115VK2	150 CFM	0.25 in-wg	684	0.3			13 W	120-1-60			0.2 A	12 lb	TOILET A110A	1,2,4
EF 207-A	PANASONIC	FV-1115VK2	150 CFM	0.25 in-wg	684	0.3			13 W	120-1-60			0.2 A	12 lb	CUSTODIAN A207	1,2,4
EF 208A	PANASONIC	FV-1115VK2	150 CFM	0.25 in-wg	684	0.3			13 W	120-1-60			0.2 A	12 lb	TOILET A208A	1,2,4
EF A106	GREENHECK	G-098-VG	350 CFM	0.25 in-wg	968	4.3	1/4	0.03		115-1-60	4	15	2.9 A	40 lb	RANGE HOOD A106	3,8
EF B101.1	GREENHECK	CUE-099-VG	700 CFM	0.80 in-wg	1561	9	1/4	0.18		115-1-60	4	15	3.8 A	42 lb	FUME HOOD B101	3,6
EF B101.2	GREENHECK	CSP-A2150	1600 CFM	0.86 in-wg	790	4		0.75	1285 W	115-1-60			11.6 A	70 lb	PURGE FAN B101	3,7
EF B102	GREENHECK	CUE-099-VG	700 CFM	0.80 in-wg	1561	9	1/4	0.18		115-1-60	4	15	3.8 A	42 lb	FUME HOOD B102	3,6
EF-B103.1	GREENHECK	CUE-099-VG	700 CFM	0.80 in-wg	1561	9	1/4	0.18		115-1-60	4	15	3.8 A	42 lb	FUME HOOD B103	3,6
EF-B103.2	GREENHECK	CSP-A2150	1600 CFM	0.86 in-wg	790	4		0.75	1285 W	115-1-60			11.6 A	70 lb	PURGE FAN B103	3,7
EF B104	GREENHECK	G-098-VG	350 CFM	0.25 in-wg	968	4.3	1/4	0.03		115-1-60	4	15	2.9 A	40 lb	TOILET B104	1,3
EF B105	GREENHECK	G-098-VG	350 CFM	0.25 in-wg	968	4.3	1/4	0.03		115-1-60	4	15	2.9 A	40 lb	TOILET B105	1,3
EF B108	GREENHECK	G-098-VG	350 CFM	0.25 in-wg	968	4.3	1/4	0.03		115-1-60	4	15	2.9 A	40 lb	CUSTODIAN B108	1,3

REMARKS:
1. INTERLOCK WITH LIGHT SWITCH (BY ELEC.)
2. PROVIDE OEM ACCESSORY OCCUPANCY SENSOR.
3. EXHAUST MOUNTED PER DETAIL F/M3.1
4. EXHAUST MOUNTED PER DETAIL G/M-3.1
5. DRYER BOOSTER FAN: PROVIDE W/LINT TRAP AND AP. INTERLOCK WITH DRYER POWER
6. EPOXY COATED EC MOTOR WITH SPEED CONTROLLER INTERLOCK WITH FUME HOOD SASH
7. PROVIDE WITH SPRING-WOUND BYPASS TIMER B/M-4.2
8. PROVIDE WITH WALL MOUNTED ON/OFF SWITCH C/M-4.2

SPLIT SYSTEM INDOOR UNIT SCHEDULE

MARK	MFR	MODEL	AIRFLOW	ELECTRICAL DATA V-Ø-HZ	MCA	MOCP	RATED HEATING	MAX HEATING OUTPUT	SENSIBLE COOLING	RATED MAX COOLING	FILTER	WEIGHT	SERVICE	REMARKS
FC-A108	TRANE	TPKA0A0241KA70A	775 CFM	SEE OUTDOOR UNIT SCHEDULE			26000.0 Btu/h	28000.0 Btu/h	24000.0 Btu/h	24000.0 Btu/h	WASHABLE	46 lb	ROOM A108	1,2,4,5
FC-A112	TRANE	TPKA0A0361KA70A	705 CFM	SEE OUTDOOR UNIT SCHEDULE			38000.0 Btu/h	40000.0 Btu/h	36000.0 Btu/h	36000.0 Btu/h	WASHABLE	53 lb	ROOM A112	1,2,4,5
FC-B102	TRANE	TPEADA0181AA70A	600 CFM	SEE OUTDOOR UNIT SCHEDULE			18777.2 Btu/h	19000.0 Btu/h	13952.0 Btu/h	18000.0 Btu/h	WASHABLE	62 lb	ROOM B102	1,3,4
FC-B107	TRANE	TPKA0A0241KA70A	775 CFM	SEE OUTDOOR UNIT SCHEDULE			26000.0 Btu/h	28000.0 Btu/h	24000.0 Btu/h	24000.0 Btu/h	WASHABLE	46 lb	ROOM B107	1,2,4,5

REMARKS:
1. PROVIDE WITH MANUFACTURER CONTROLS.
2. FAN COIL MOUNTED PER DETAIL F/M-3.1
3. FAN COIL MOUNTED PER DETAIL E/M-3.1
4. PROVIDE WITH R-410A
5. PROVIDE CONDENSATE PUMP

SPLIT SYSTEM OUTDOOR UNIT

MARK	MFR.	MODEL NO.	UNIT CAPACITIES (MBH) HEATING	COOLING	EER	ELECTRICAL DATA V-Ø-HZ	MCA	MOCP	WEIGHT	SERVICE	REMARKS
CU-A108	TRANE	TRUZH0241HA70NA	28.0	24.0	12.65	208-1-60	17	27	190	FC-A108	1
CU-A112	TRANE	TRUZA0361KA70NA	40.0	36.0	10.8	208-1-60	25	30	214	FC-A112	1
CU-B102	TRANE	TRUZA0181KA70NA	19.0	18.0	10.8	208-1-60	11	28	100	FC-B102	2
CU-B107	TRANE	TRUZH0241HA70NA	28.0	24.0	12.65	208-1-60	17	27	190	FC-B106	2

REMARKS:
1. OUTDOOR UNIT MOUNTED PER DETAIL D/M-3.1
2. OUTDOOR UNIT MOUNTED PER DETAIL C/M-3.1

GRAVITY INTAKE SCHEDULE

MARK	MFR	MODEL NO	AIRFLOW	SP	WEIGHT	REMARKS
FGI-B103	GREENHECK	FABRA INTAKE 18"X24"	1600 CFM	0.07 in-wg	64 lb	1,2
FGI-B101	GREENHECK	FABRA INTAKE 18"X24"	1600 CFM	0.07 in-wg	64 lb	1,2

REMARKS:
1. PROVIDE WITH BACKDRAFT DAMPERS.
2. GRAVITY INTAKE UNIT MOUNTED PER DETAIL G/M-3.3

ELECTRIC HEATER SCHEDULE

MARK	MANUF.	MODEL	TYPE	ELECTRICAL V-Ø-Hz	AMPS	WATTS	OPER. WEIGHT	LOCATION	REMARKS
EH A107	MARLEY	WHT500	UTILITY HEATER	208-1-60	1.8	0.4 kW	6.00 lb	RISER ROOM A107	1, 2, 3
EH B106	MARLEY	WHT500	UTILITY HEATER	208-1-60	1.8	0.4 kW	6.00 lb	RISER ROOM B106	1, 2, 3

REMARKS:
1. UTILITY HEATER FOR FIRE RISER TO MAINTAIN TEMPERATURE AT 40 F OR ABOVE PER 2019 CBC 902.1.3
2. PROVIDE WITH WALL MOUNTED LINE VOLTAGE THERMOSTAT
3. CORDINATE LOCATION WITH FIRE PROTECTION/PLUMBING/MECHANICAL/ELECTRICAL AND ALL OTHER TRADES

Mechanical Ventilation.

ROOM #	ROOM NAME	Area	ASHRAE 62.1 OCCUPANCY	UNOCCUPIED (MIN OSA)	OCCUPIED (MAX OSA)	DESING OSA (MIN/MAX)
A101	CLASSROOM	859	62-Educational Facilities - Classrooms Age 9 Plus	129	327	130/350
A102	CLASSROOM	867	62-Educational Facilities - Classrooms Age 9 Plus	131	330	130/350
A103	CLASSROOM	908	62-Educational Facilities - Classrooms Age 9 Plus	137	346	140/350
A104	CLASSROOM	908	62-Educational Facilities - Classrooms Age 9 Plus	137	346	140/350
A105	CLASSROOM	904	62-Educational Facilities - Classrooms Age 9 Plus	136	344	140/350
A106	SPECIAL DAY CLASSROOM	984	62-Educational Facilities - Classrooms Age 9 Plus	148	374	150/375
A106B	SENSORY ROOM	127	62-Office Buildings - Office Space	20	20	25/25
A110	SPECIAL DAY CLASSROOM	992	62-Educational Facilities - Classrooms Age 9 Plus	149	377	150/375
A110B	SENSORY ROOM	127	62-Office Buildings - Office Space	20	20	25/25
A111	CLASSROOM	900	62-Educational Facilities - Classrooms Age 9 Plus	135	342	135/350
A201	CLASSROOM	900	62-Educational Facilities - Classrooms Age 9 Plus	135	342	135/350
A202	CLASSROOM	908	62-Educational Facilities - Classrooms Age 9 Plus	137	346	135/350
A203	CLASSROOM	908	62-Educational Facilities - Classrooms Age 9 Plus	137	346	135/350
A204	CLASSROOM	908	62-Educational Facilities - Classrooms Age 9 Plus	137	346	135/350
A205	CLASSROOM	904	62-Educational Facilities - Classrooms Age 9 Plus	136	344	135/350
A206	CLASSROOM	900	62-Educational Facilities - Classrooms Age 9 Plus	135	342	135/350
A208	STAFF BREAK ROOM	593	62-Office Buildings - Breakrooms	89	297	100/300
A208B	FLEXIBLE OFFICE	109	62-Office Buildings - Office Space	17	17	25/25
A209	CLASSROOM	908	62-Educational Facilities - Classrooms Age 9 Plus	137	346	135/350
A210	CLASSROOM	900	62-Educational Facilities - Classrooms Age 9 Plus	135	342	135/350
B101	SCIENCE B101	1584	62-Educational Facilities - Classrooms Age 9 Plus	238	602	250/625
B102	PREP ROOM	392	62-Educational Facilities - Classrooms Age 9 Plus	59	149	75/150
B103	SCIENCE	1594	62-Educational Facilities - Classrooms Age 9 Plus	240	606	250/625

Applicable Code: 2019 CBC 02/05/2020 Revised: 02/14/2020

MEP Componet Anchorage Note

All mechanical, plumbing, and electrical components shall be anchored and installed per the details on the DSA-approved construction documents. The following components shall be anchored or braced to meet the force and displacement requirements prescribed in the 2019 CBC Sections 1617A.1.18 through 1617A.1.26 and ASCE 7-16 Chapters 13, 26, and 30:

1. All permanent equipment and components.
2. Temporary, movable or mobile equipment that is permanently attached (e.g. hard wired) to the building utility services such as electricity, gas or water. "Permanently attached" shall include all electrical connections except plugs for 110/220 volt receptacles having a flexible cable.
3. Temporary, movable or mobile which is heavier than 400 pounds or has a center of mass located 4 feet or more above the adjacent floor or roof level that directly support the component is required to be restrained in a manner approved by DSA.

The following mechanical and electrical components shall be positively attached to the structure but need not demonstrate design compliance with the references noted above. These components shall have flexible connections provided between the component and associated ductwork, piping, and conduit. Flexible connections must allow movement in both trasverse and longitudinal directions:

A. Components weighing less than 400 pounds and having a center of mass located 4 feet or less above the adjacent floor or roof level that directly support the component.

B. Components weighing less than 20 pounds, or in the case of distributed systems, less than 5 pounds per foot, which are suspended from a roof or floor or hung from a wall.

The anchorage of all mechanical, electrical and plumbing components shall be subject to the approval of the design professional in general responsible charge of structural engineer delegated responsibility and acceptance by DSA. The project inspector will verify that all components and equipment have been anchored in accordance with the above requirements.

Piping, Ductwork, and Electrical Distribution System Bracing Note

Piping, ductwork, and electrical distribution systems shall be braced to comply with the forces and displacements prescribed in ASCE 7-16 Section 13.3 as defined in ASCE 7-16 Sections 13.6.5, 13.6.6, 13.6.7, 13.6.8; and 2019 CBC, Sections 1617A.1.24, 1617A.1.25 and 1617A.1.26.

The method of showing bracing and attachments to the structure for the identified distribution system are as noted below. When bracing and attachments are based on a preapproved installation guide (e.g., OSHPD OPM for 2013 CBC or later), copies of the bracing system installation guide or manual shall be available on the jobsite prior to the start of and during the haging and bracing of the distribution systems. The Structural Engineer of Record shall verify the adequacy of the structure to support the hanger and brace loads.

Mechanical Piping (MP), Mechanical Ducts (MD), Plumbing Piping (PP), Electrical Distribution Systems (E):

MP☐ MD☐ PP☐ E☐ Option 1: Detailed on the approved drawings with project specific notes and details

MP☒ MD☒ PP☐ E☐ Option 2: Shall comply with the applicable OSHPD Pre-Approval (OPM #) #OPM 0043-13

APPLICABLE GOVERNING CODES:

2019 CALIFORNIA BUILDING CODE
2019 CALIFORNIA ELECTRICAL CODE
2019 CALIFORNIA MECHANICAL CODE
2019 CALIFORNIA PLUMBING CODE
2019 CALIFORNIA ENERGY CODE
2019 CALIFORNIA FIRE CODE
2019 CALIFORNIA GREEN BUILDING STANDARDS

FS DAMPER SCHEDULE

MANUFACTURER:RUSKIN (EXCEPT AS NOTED)

FSD-2		IN WALL FIRE SMOKE DAMPER	SERIES FSD60: 1 1/2 HOUR RATED AIRFOIL BLADE. GALVANIZED STEEL CONSTRUCTION. SMOKE DETECTOR SUPPLY BY ELECTRICAL.
FSD-3		FRONT ACCESS IN REGISTER FIRE SMOKE DAMPER	SERIES FD60FA: 1 1/2 HOUR RATED MULTIPLE BLADE STATIC FIRE DAMPER. SMOKE DETECTOR SUPPLY BY ELECTRICAL.

NOTES: 1. ADAPTER NEEDED FOR TRANSITION FROM SQUARE NECK TO ROUND DUCT.

HVAC LEGEND

SYMBOL	ABBREVIATION	DESCRIPTION
X / X		EQUIPMENT TYPE / EQUIPMENT NUMBER
X / X-X		DETAIL / DRAWING NUMBER / SHEET NUMBER
	SA OR OA	SECTION THRU SUPPLY AIR OR OUTSIDE AIR DUCT
	RA OR EA	SECTION THRU RETURN AIR OR EXHAUST AIR DUCT
DN		ROUND DUCT DOWN
DN	DN OR UP	SLOPE DUCT DOWN OR UP IN DIRECTION OF FLOW
	AL	ACOUSTICAL LINING
	FC	FLEXIBLE DUCT CONNECTION
	VD	VOLUME DAMPER
	FD OR FSD	FIRE DAMPER OR FIRE SMOKE DAMPER
	TV	TURNING VANES
		FLEXIBLE DUCT
		45° ROUND DUCT TAKE-OFF
		45° RECTANGULAR DUCT TAKE-OFF
		90° TURN - ROUND DUCT
		90° RADIUS TURN - ROUND OR RECTANGULAR DUCT
		SQUARE TO ROUND DUCT TRANSITION
		DUCT TRANSITION
		RECTANGULAR DUCT 90° SPLIT
T		THERMOSTAT @ 46" AFF MAX TO CENTER LINE
	AP	ACCESS PANEL
	POC	POINT OF CONNECTION
	POD	POINT OF DEMOLITION
	BHP	BRAKE HORSEPOWER
	HP	HORSEPOWER
	SAD	SEE ARCHITECTURAL DRAWINGS
	SSD	SEE STRUCTURAL DRAWINGS
	SCD	SEE CIVIL DRAWINGS
	AFC	ABOVE FINISH CEILING

BLDG 'MECHANICAL' SHEET LIST

M-1.1	MECHANICAL SHEDULES & LEGENDS
M-A2.1	BLDG A - FIRST FLOOR MECHANICAL PLAN
M-A2.2	BLDG A - SECOND FLOOR MECHANICAL PLAN
M-A2.3	BLDG A - ROOF MECHANICAL PLAN
M-B2.1	BLDG B - FIRST FLOOR MECHANICAL PLAN
M-B2.2	BLDG B - ROOF MECHANICAL PLAN
M-3.1	MECHANICAL DETAILS
M-3.2	MECHANICAL DETAILS
M-3.3	MECHANICAL DETAILS
M-3.4	MECHANICAL DETAILS
M-4.1	CONTROL DIAGRAMS
M-4.2	CONTROL DIAGRAMS

AIR TERMINAL SCHEDULE

MANUFACTURER: TITUS (EXCEPT AS NOTED)

SDG		SPIRAL DUCT SUPPLY GRILLE	SERIES S301FS: ALUMINUM DUCT GRILLE, WHITE POWDER COATED FINISH, 3/4" BLADE SPACING; DIRECT MOUNT TO SPIRAL DUCT; PROVIDE WITH AIR SCOOP.
CD		CEILING DIFFUSER	TDC - COMPLETE WITH EQUALIZING GRID, THROW-REDUCING VANES, STEEL CONSTRUCTION
WR		WALL RETURN GRILLE	350ZRL - LOUVERS ON 3/4" CENTERS, STEEL CONSTRUCTION, LOUVERS PARALLEL WITH LONG DIMENSION
EG		EXHAUST GRILLE CEILING RETURN	50F - 1/2" x 1/2" x 1/2" EGGCRATE, ALUMINUM CORE WITH ALUMINUM GRID
WS		WALL SUPPLY GRILLE	350ZRS - LOUVERS ON 3/4" CENTERS, STEEL CONSTRUCTION, LOUVERS PARALLEL WITH LONG DIMENSION

NOTES:
1. ADAPTER NEEDED FOR TRANSITION FROM SQUARE NECK TO ROUND DUCT.
2. SIZE (NECK/FACE) TYPE CFM (NO. OF THROW) FACE SIZE FOR T-BAR CEILING ONLY

IDENTIFICATION STAMP
DIV. OF THE STATE ARCHITECT
APP: 01-119994 INC:
REVIEWED FOR
SS ☑ FLS ☑ ACS ☑
DATE: 08/16/2022

QUATTROCCHI KWOK ARCHITECTS
Main Office:
636 Fifth Street, Santa Rosa, CA 95404
Pleasanton Office:
600 Main Street, Suite E,
Pleasanton, CA 94566
(707) 576-0829

COSTA ENGINEERS INC.

LIBERTY HIGH SCHOOL

NEW CLASSROOM BUILDING

850 2ND STREET
BRENTWOOD, CA
94513

LIBERTY UNION HIGH SCHOOL DISTRICT

REVISIONS

DSA APP NO. 01-119994

ARCH PROJECT NO: 1925.00
DRAWN BY: Author
DRAWING SCALE:
PTN: 61721-83 FILE NO: 7-H4

CONSTRUCTION DOCUMENTS
JUNE 24, 2022

SHEET TITLE
MECHANICAL SHEDULES & LEGENDS

SHEET NUMBER
M-1.1

7/26/2022 4:23:33 PM
C:\Users\bmungandi\OneDrive - Costa Engineers\Documents\21038 Liberty HS Classroom Bldg RVT20_bMungandi.rvt

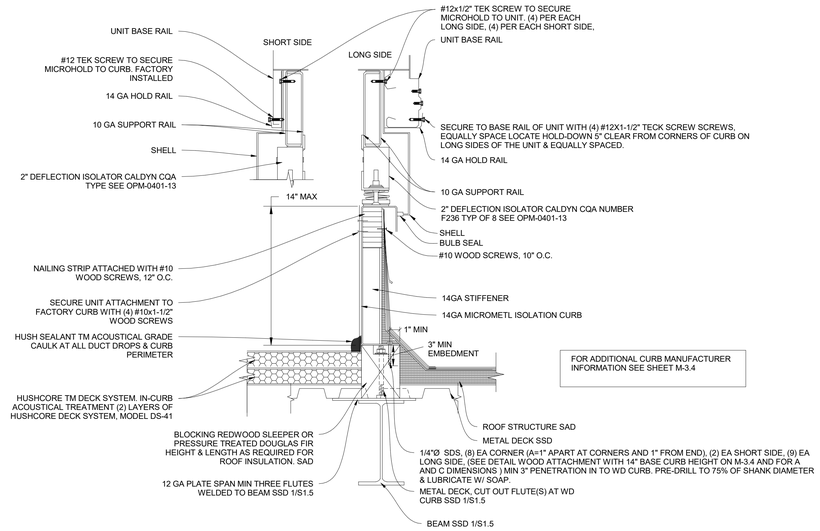

A PACKAGE ROOFTOP HEAT PUMP UNIT MOUNTING ON ROOF DETAIL BLDG A

SCALE: NONE

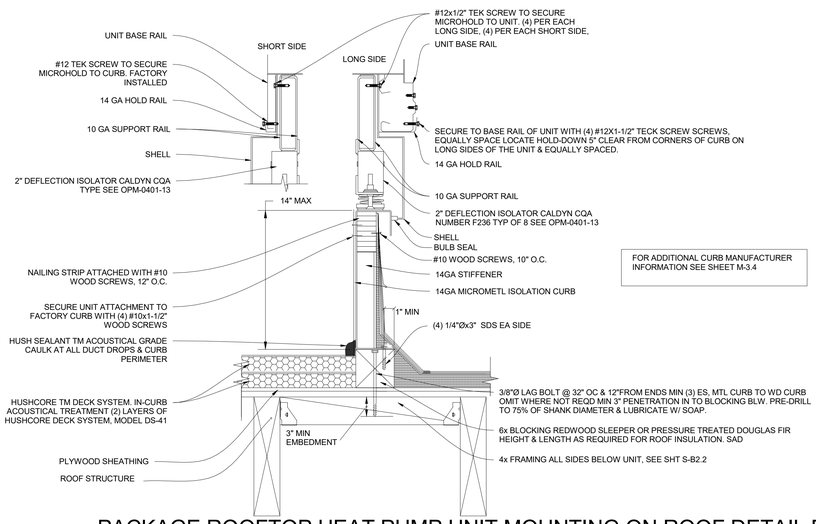

B PACKAGE ROOFTOP HEAT PUMP UNIT MOUNTING ON ROOF DETAIL BLDG B

SCALE: NONE

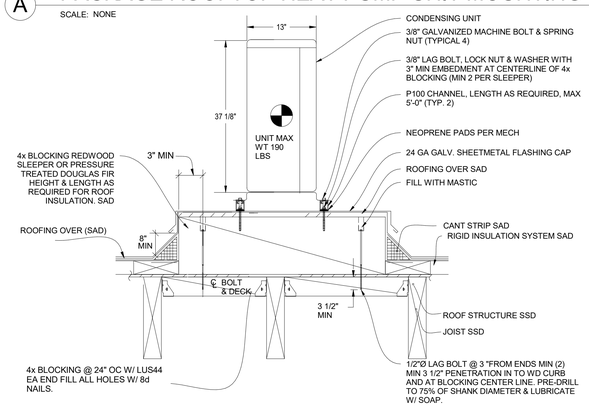

C CONDENSING UNIT MOUNTING ON ROOF BLDG B

SCALE: NONE

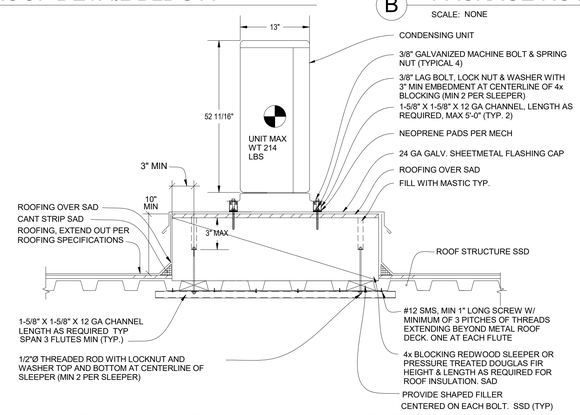

D CONDENSING UNIT MOUNTING ON ROOF BLDG A

SCALE: NONE

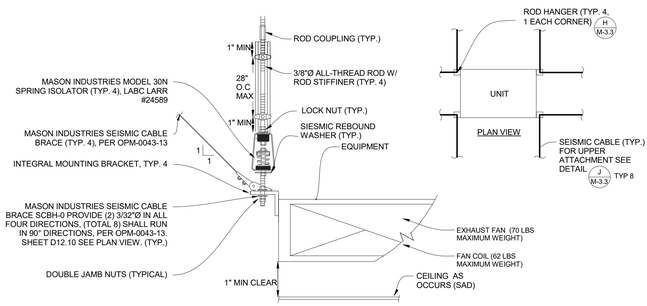

E CEILING EQUIPMENT MOUNTING DETAIL

SCALE: NONE

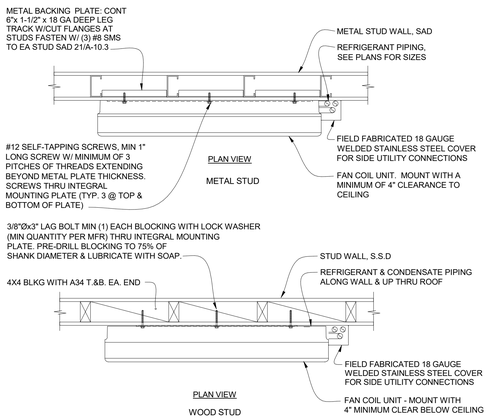

F WALL-MOUNTED FAN COIL DETAIL

SCALE: NONE

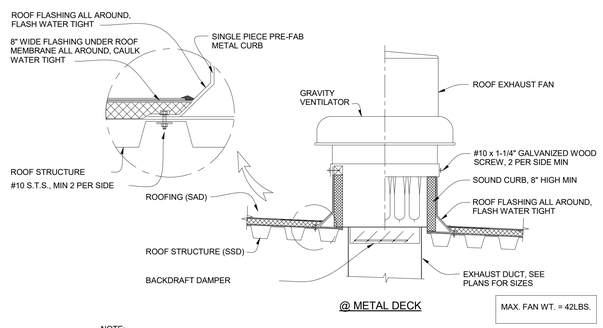

NOTE:
ALL FASTENERS EXPOSED TO WEATHER SHALL BE SEALED WITH A SINGLE COMPONENT, POLYURETHANE SEALANT.

G ROOFTOP EXHAUST FAN MOUNTING DETAILS

SCALE: NONE

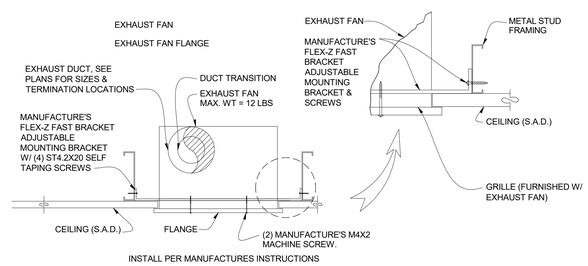

INSTALL PER MANUFACTURES INSTRUCTIONS

H CEILING EXHAUST FAN MOUNTING DETAIL

SCALE: NONE

IDENTIFICATION STAMP
DIV. OF THE STATE ARCHITECT
APP: 01-119994 INC:
REVIEWED FOR
SS ☑ FLS ☑ ACS ☑
DATE: 08/16/2022

QUATTROCCHI KWOK ARCHITECTS

Main Office:
636 Fifth Street, Santa Rosa, CA 95404
Pleasanton Office:
600 Main Street, Suite E,
Pleasanton, CA 94566
(707) 576-0829

COSTA ENGINEERS INC.

REGISTERED PROFESSIONAL ENGINEER CHRISTOPHER J. DEL SORBO No. 30000 Exp. 12-31-22 MECHANICAL STATE OF CALIFORNIA

LIBERTY HIGH SCHOOL

NEW CLASSROOM BUILDING

850 2ND STREET
BRENTWOOD, CA
94513

LIBERTY UNION HIGH SCHOOL DISTRICT

REVISIONS

DSA APP NO. 01-119994

ARCH PROJECT NO: 1925.00
DRAWN BY: Author
DRAWING SCALE:
PTN: 61721-83 FILE NO: 7-H4

CONSTRUCTION DOCUMENTS

JUNE 24, 2022

SHEET TITLE

MECHANICAL DETAILS

SHEET NUMBER

M-3.1

7/26/2022 4:23:34 PM

C:\Users\bmungandi\OneDrive - Costa Engineers\Documents\21028 Liberty HS Classroom Bldg RVT20_bMungandi.rvt

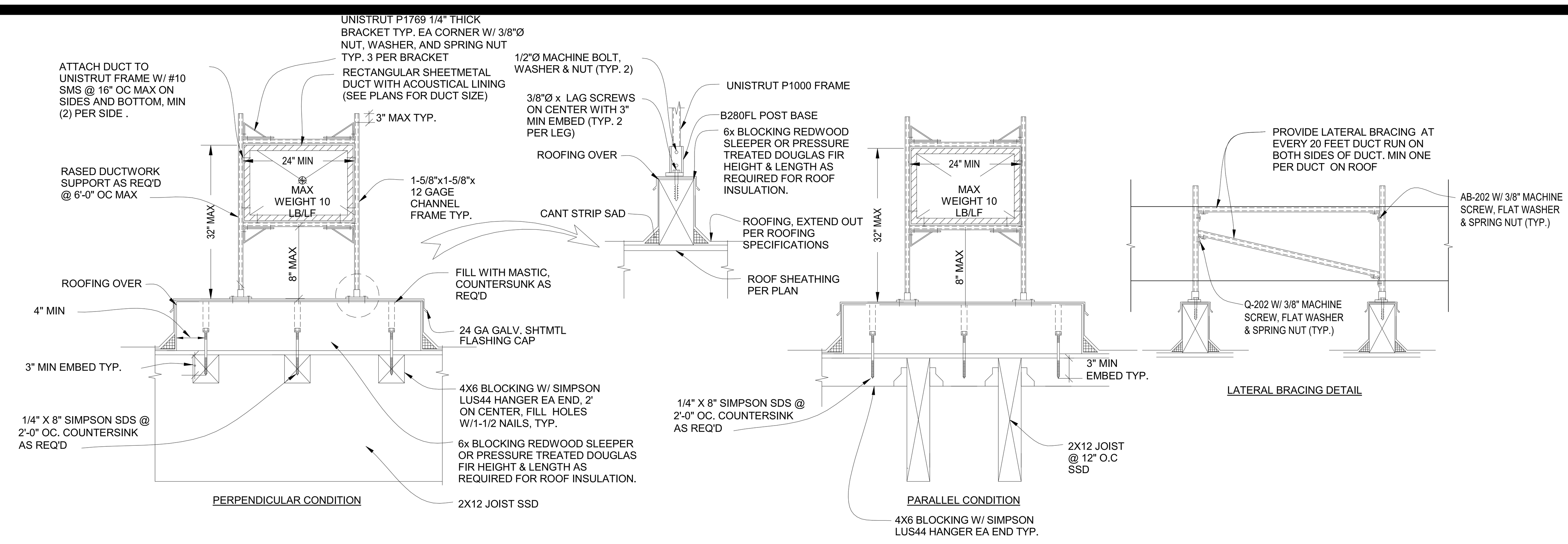

NOTE: SUPPORTS SHALL BE PLACED 6'-0" ON CENTER (MAX.) AND AT ALL CHANGES IN DIRECTION.

A ROOFTOP DUCT SUPPORT DETAIL

SCALE: NONE

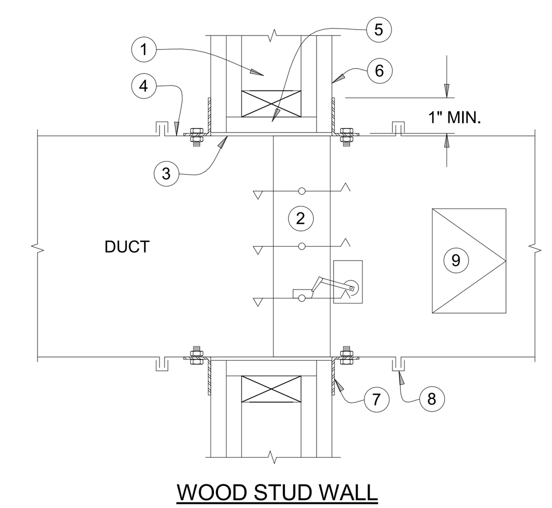

SHEET NOTES:

1. FIRE RATED INFILL (SEE ARCHITECTURAL DWGS.)
2. "RUSKIN" COMBINATION FIRE/SMOKE DAMPER. INSTALL IN ACCORDANCE WITH MANUFACTURER'S INSTALLATION INSTRUCTIONS.
3. WELD OR BOLT FIRE/SMOKE DAMPER TO SLEEVE
4. 14 GAUGE SLEEVE
5. 5/8" GYPSUM BOARD LINER ALL AROUND
6. FIRE RATED WALL (SEE ARCHITECTURAL DWGS.)
7. MOUNTING ANGLE, 1-1/2 x 1-1/2 x 14 GAUGE MINIMUM
8. BREAK AWAY CONNECTION
9. ACCESS DOOR

RUSKIN MODEL FSD60

CSFM FIRE DAMPER LISTING #3235-0245:0126
LISTING #3235-0245:0129
UL CLASSIFIED: UL555S LISTING R5531

B FIRE SMOKE DAMPER THRU FIRE RATED WALL DETAIL FSD-2

SCALE: NTS

System No. W-L-7156

Classified by Underwriters Laboratories, Inc. to UL 1479 and CAN/ULC-S115

ANSI/UL1479 (ASTM E814)	CAN/ULC S115
F Ratings — 1 and 2 Hr (See Item 1)	F Ratings — 1 and 2 Hr (See Item 1)
T Rating — 0, 1 and 2 Hr (See Item 4C)	FT Rating — 0, 1, and 2 Hr (See Item 4C)
	FH Ratings — 1 and 2 Hr (See Item 1)
	FTH Rating — 0, 1, and 2 Hr (See Item 4C)

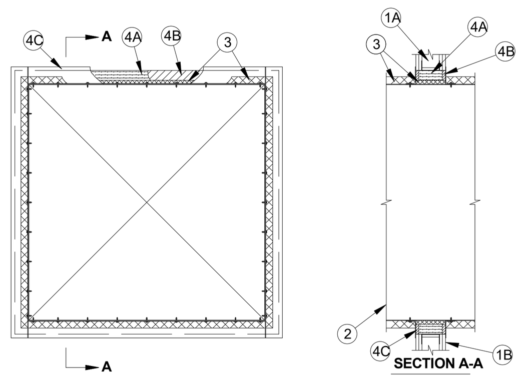

1. Wall Assembly — The 1 or 2 hr fire-rated gypsum board/stud wall assembly shall be constructed of the materials and in the manner specified in the individual U300, U400, V400 or W400 Series Wall and Partition Designs in the UL Fire Resistance Directory and shall include the following construction features:
   A. Studs — Wall framing shall consist of either wood studs or steel channel studs. Wood studs to consist of nom 2 by 4 in. (51 by 102 mm) lumber spaced max 16 in. (406 mm) OC. Steel studs to be min 3-1/2 in. (89 mm) wide and spaced max 24 in. (610 mm) OC. Additional framing members shall be used to completely frame around opening.
   B. Gypsum Board* — Min 5/8 in. (16 mm) thick, 4 ft (1.2 m) wide with square or tapered edges. The gypsum board type, thickness, number of layers and orientation shall be as specified in the individual Wall and Partition Design. Max size of opening is 210 sq in. (1355 cm2) with a max width of 14-1/2 in. (368 mm) for wood studs. Max size of opening is 76.2 sq ft. (7 m2) with a max width of 105-1/2 in. (2.7 m) for steel studs.
   The hourly F and FH Ratings of the firestop system are equal to the hourly fire rating of the wall in which it is installed.
2. Steel Duct — Max 100 by 100 in. (2.5 by 2.5 m) steel duct to be installed within the framed opening. The duct shall be constructed and reinforced in accordance with SMACNA construction standards. Steel duct to be rigidly supported on both sides of wall assembly.

HILTI Hilti Firestop Systems — Reproduced by HILTI, Inc. Courtesy of Underwriters Laboratories, Inc. August 22, 2018 — Page: 1 of 2

System No. W-L-7156

WL 7156

3. Batts and Blankets* — Nom 1-1/2 or 2 in. (38 or 51 mm) thick glass fiber batt or blanket (min 3/4 pcf or 12 kg/m3) jacketed on the outside with a foil-scrim-kraft facing. Longitudinal and transverse joints sealed with aluminum foil tape. During the installation of the fill material, the batt or blanket shall be compressed minimum 50% such that the annular space within the firestop system shall be min 1/2 in. (13 mm) to max 3-1/2 in. (89 mm); refer to the table below. See Batts and Blankets (BKNV) category in the Building Materials Directory for names of manufacturers. Any batt or blanket meeting the above specifications and bearing the UL Classification Marking with a Flame Spread Index of 25 or less and a Smoke Developed Index 50 or less may be used.
4. Firestop System — The firestop system shall consist of the following:
   A. Packing Material — Min 3-5/8 (92 mm) or 4-7/8 in. (124 mm) thickness of min 4 pcf (64 kg/m3) mineral wool batt insulation firmly packed into opening as a permanent form for 1 or 2 hr fire-rated walls, respectively. Packing material to be recessed from both surfaces of wall to accommodate the required thickness of fill material.
   B. Fill, Void or Cavity Material* — Sealant — Min 5/8 in. (16 mm) thickness of fill material applied within annulus, flush with both surfaces of wall. HILTI CONSTRUCTION CHEMICALS, DIV OF HILTI INC — FS-ONE MAX Intumescent Sealant
   C. Steel Retaining Angles — Min No. 16 gauge (0.059 in. or 1.5 mm) galv steel angles sized to lap steel duct a min of 2 in. 51 mm) and lap wall surfaces a min of 1 in. (25 mm). Angles attached to steel duct on both sides of wall with min No. 10 steel sheet metal screws spaced a max of 1 in. (25 mm) from each end of steel duct and spaced a max of 6 in. (152 mm) OC. When max duct dimension does not exceed 48 in. (122cm) and duct area does not exceed 1300 in2 (8387 cm2), angles may be min No. 18 gauge galv steel. Angles attached to steel duct on both sides of wall with min No. 10 by 1/2 in. (13 mm) long steel sheet metal screws located a max of 1 in. (25 mm) from each end of steel duct and spaced a max of 6 in. (152 mm) OC. In addition, see table below for additional conditions and options regarding retaining angles.

Max Duct Dimension	Duct Thickness	Max Insulation Thickness (Item 3)	Annular Space	Packing Material (Item 4A) Required	Angle (Item 4C) Required	T-Rating Hr
**24 in. (610 mm)	24 ga or heavier	1-1/2 in. (38 mm)	1/4 in. min to 1 in. max (6 to 25 mm)	No	No	0
25 in. (635 mm) wide by 45 in. (1143 mm) high	24 ga or heavier	2 in. (51 mm)	1/4 in. min to 3-1/2 in. max (6 to 89 mm)	Yes	No	1 and 2 (Same as wall rating)

** Indicates that when max 1-1/2 in. (38 mm) thick insulation is used, steel angles are optional for those sides of the duct that do not exceed the dimension specified.

* Indicates such products shall bear the UL or cUL Certification Mark for jurisdictions employing the UL or cUL Certification (such as Canada), respectively.

HILTI Hilti Firestop Systems — Reproduced by HILTI, Inc. Courtesy of Underwriters Laboratories, Inc. August 22, 2018 — Page: 2 of 2

C DUCT THRU FIRE RATED WALL

SCALE: NTS

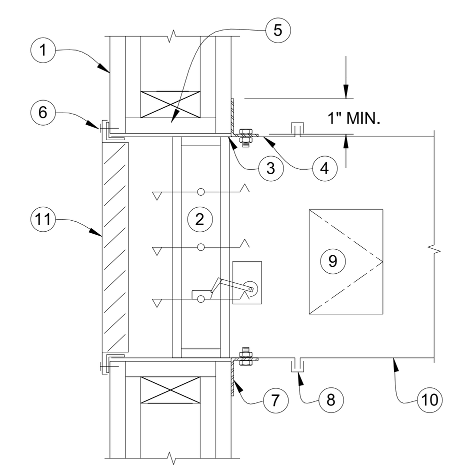

SHEET NOTES:

1. FIRE RATED WALL (SEE ARCHITECTURAL DWGS.)
2. "RUSKIN" COMBINATION FIRE/SMOKE DAMPER. INSTALL IN ACCORDANCE WITH MANUFACTURER'S INSTALLATION INSTRUCTIONS.
3. WELD OR BOLT FIRE/SMOKE DAMPER TO SLEEVE
4. 14 GAUGE SLEEVE
5. 5/8" GYPSUM BOARD LINER ALL AROUND
6. #8 TAPER HEAD FINISH SCREW
7. MOUNTING ANGLE, 1-1/2 x 1-1/2 x 14 GAUGE MINIMUM
8. BREAK AWAY CONNECTION
9. ACCESS DOOR
10. SHEETMETAL DUCT
11. SIDE WALL GRILLE (SUPPLIED BY OTHERS)

RUSKIN MODEL FSD60FA

CSFM LISTING #3225-0245:0126

UL CLASSIFIED: UL555 LISTING R5531
UL555S LISTING R5531

D FIRE/SMOKE DAMPER FRONT ACCESS DETAIL FSD-3

SCALE: NONE

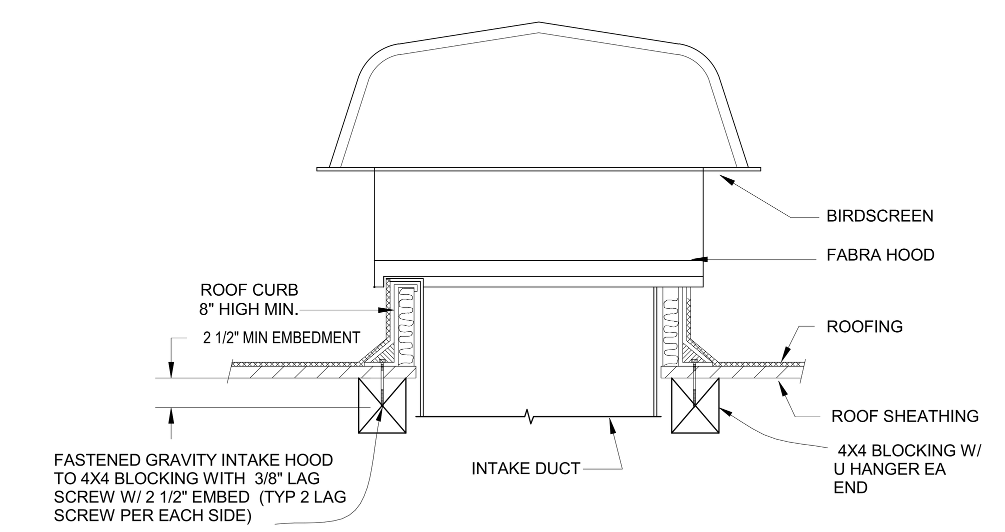

E GRAVITY INTAKE DETAIL

SCALE: NONE

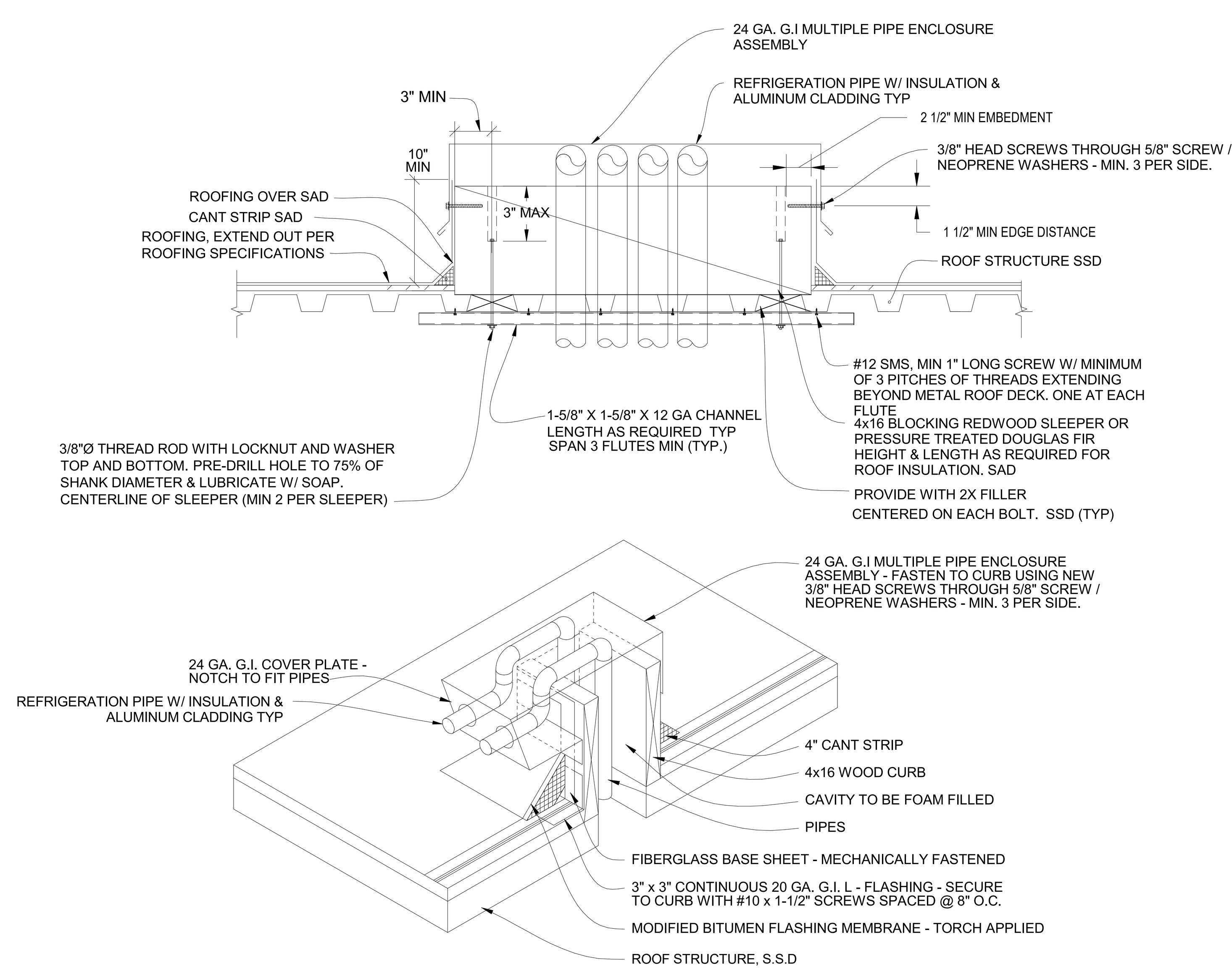

NOTES:

1. ALL PIPES ENTERING THE PIPE ENCLOSURE ASSEMBLY SHALL BE SLOPED UPWARD AS THEY ENTER THE FLASHING SO THAT WATER WILL NOT BE ABLE TO RUN INTO THE BUILDING.
2. WHERE SURFACE IS GRAVEL, SPUD BACK GRAVEL TO ALLOW INSTALLATION OF MODIFIED BITUMEN FLASHING PLY. SURFACE FLASHING PLY WITH ALUMINUM COATING.
3. CLEAN AND PRIME THE ENTIRE TIE-IN AREA.

F REFRIGERATION PIPING THRU ROOF DETAIL

SCALE: NONE

MINIMUM ROD SIZES (INCHES)	PIPE DIAMETER (INCHES)
3/8"	2" & SMALLER PIPE

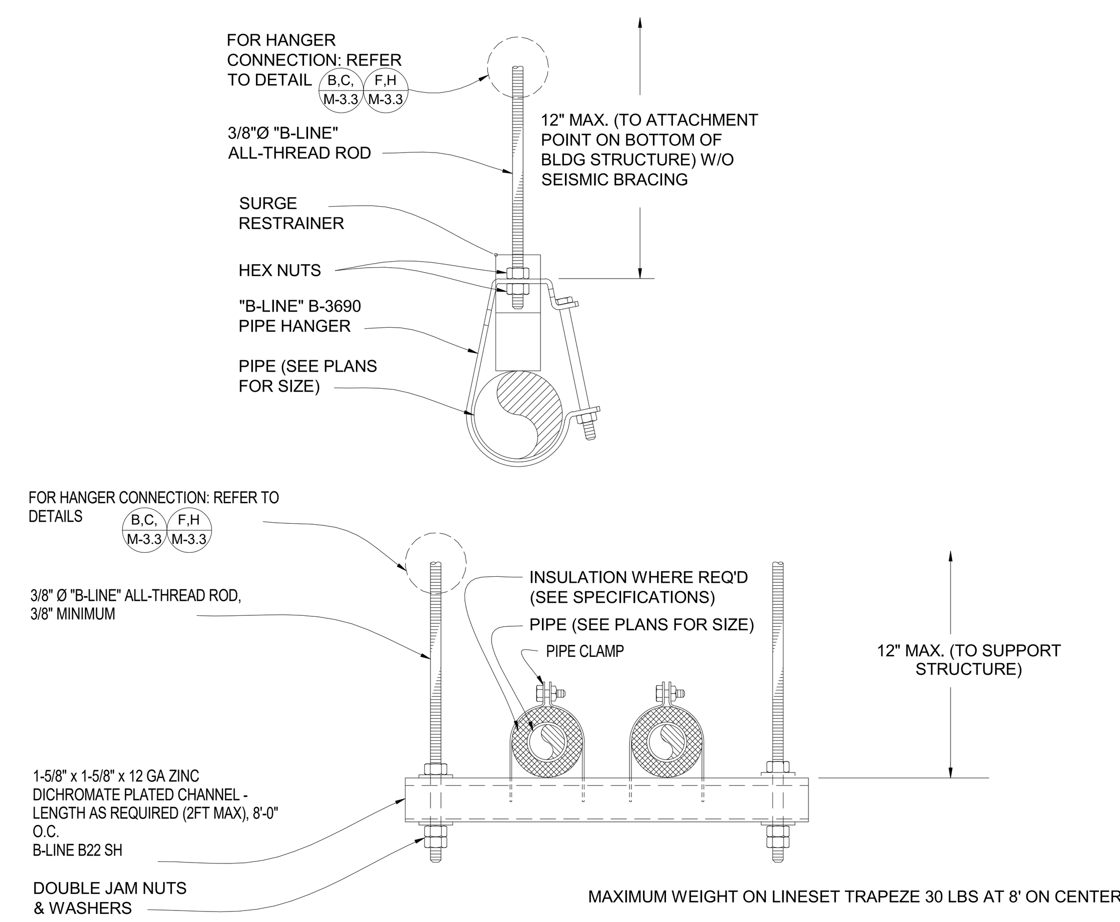

MAXIMUM WEIGHT ON LINESET TRAPEZE 30 LBS AT 8' ON CENTER

GENERAL NOTES:

1. RUN PIPING TRAPEZE AS CLOSE AS POSSIBLE TO STRUCTURE.
2. SUPPORT PIPING AT A MAXIMUM OF 8'-0" INTERVALS.
3. SEE PLANS FOR PIPE SIZES.
4. CHANNEL DEFLECTION SHALL NOT EXCEED 1/360 OF THE SPAN BETWEEN RODS. DOUBLE-UP CHANNELS AS REQUIRED.
5. B-LINE CHANNEL ROD STIFFENER @ ALL-THREAD WHERE DIAGONAL BRACE OCCURS. INCLUDE SC228 ASSEMBLY AS RECOMMENDED BY MANUFACTURER.
6. NO BRACING IS REQUIRED ON TRAPEZE ASSEMBLY WHEN SUPPORTED LESS THAN 12" FROM BOTTOM OF STRUCTURE AND THE TOTAL WEIGHT IS LESS THAN 100 LBS PER 2019 CBC 1617A.1.26 EXCEPTION 1.

G TYPICAL PIPE HANGER DETAILS

SCALE: NONE

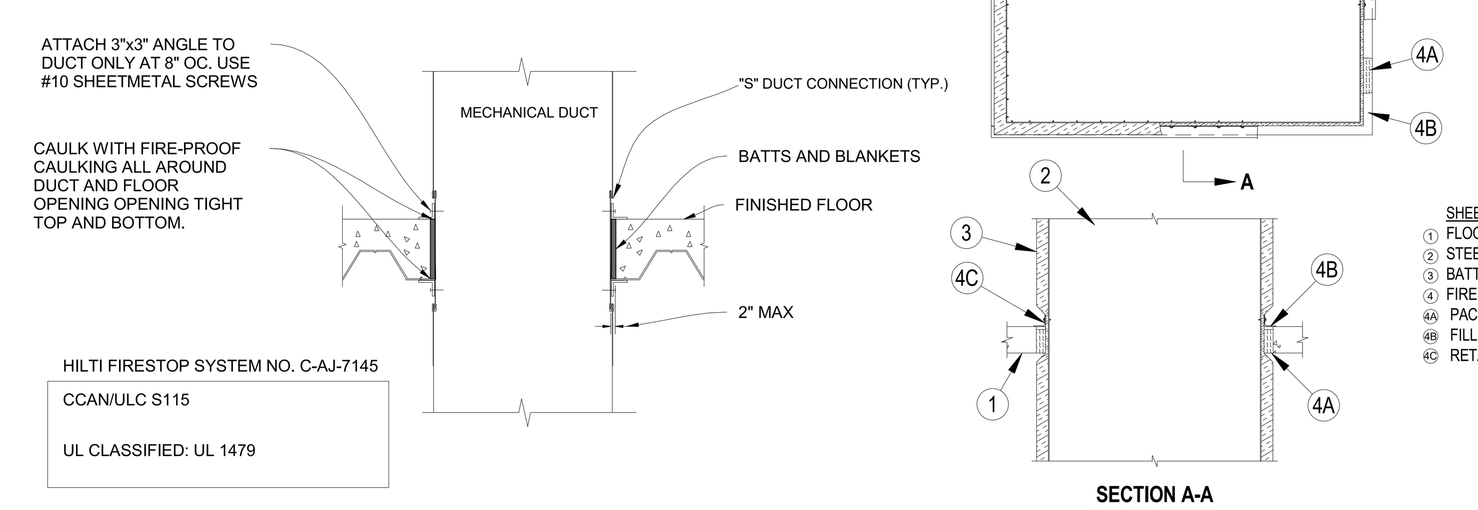

HILTI FIRESTOP SYSTEM NO. C-AJ-7145

CCAN/ULC S115

UL CLASSIFIED: UL 1479

SHEET NOTES:

1. FLOOR OR WALL ASSEMBLY
2. STEEL DUCT
3. BATTS AND BLANKETS
4. FIRESTOP SYSTEM
4A. PACKING MATERIAL
4B. FILL, VOID OR CAVITY MATERIAL — SEALANT
4C. RETAINING ANGLES

J DUCT THRU FLOOR DETAIL

SCALE: NTS

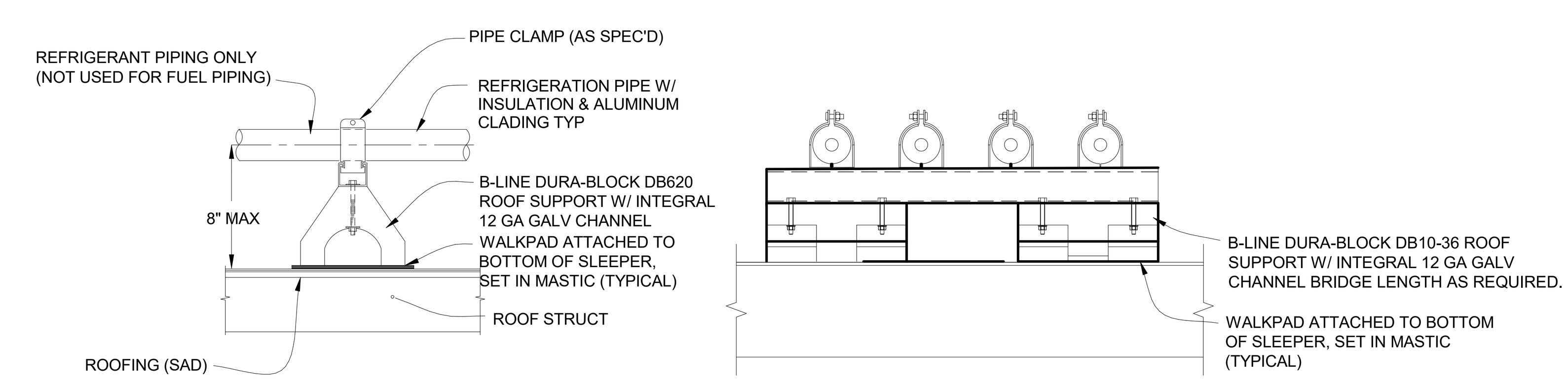

NOTE: SUPPORTS SHALL BE AT 8'-0" ON CENTER & AT ALL CHANGE OF DIRECTION

H REFRIGERANT PIPING MOUNTED ON ROOF

SCALE: NTS

IDENTIFICATION STAMP
DIV. OF THE STATE ARCHITECT
APP: 01-119994 INC:
REVIEWED FOR
SS ☑ FLS ☑ ACS ☑
DATE: 08/16/2022

QUATTROCCHI KWOK ARCHITECTS
Main Office:
636 Fifth Street, Santa Rosa, CA 95404
Pleasanton Office:
600 Main Street, Suite E,
Pleasanton, CA 94566
(707) 576-0829

COSTA ENGINEERS INC.
3274 Villa Lane Napa, CA 94558 ph: 707-252-9177 fax: 707-252-6473

REGISTERED PROFESSIONAL ENGINEER
CHRISTOPHER J. DEL CORE
No. 31600
Exp. 12-31-22
MECHANICAL
STATE OF CALIFORNIA

LIBERTY HIGH SCHOOL

NEW CLASSROOM BUILDING

850 2ND STREET
BRENTWOOD, CA
94513

LIBERTY UNION HIGH SCHOOL DISTRICT

REVISIONS

DSA APP NO. 01-119994

ARCH PROJECT NO: 1925.00
DRAWN BY: Author
DRAWING SCALE:
PTN: 61721-83 FILE NO: 7-H4

CONSTRUCTION DOCUMENTS

JUNE 24, 2022

SHEET TITLE

MECHANICAL DETAILS

SHEET NUMBER

M-3.2

8/16/2022 12:12:51 PM

C:\Users\bmungandi\OneDrive - Costa Engineers\Documents\21038 Liberty HS Classroom Bldg RVT20_bmungandi.rvt

DUCT SUPPORT NOTES:

A. ALL STRAPS, RODS, TRAPEZE ANGLES AND TRAPEZE CHANNELS SHALL BE SIZED AND INSTALLED IN ACCORDANCE WITH SMACNA 2006 "HVAC DUCT CONSTRUCTION STANDARDS - METAL AND FLEXIBLE".

B. ALL BOLTS, NUTS, SCREWS AND OTHER FASTENING DEVICES SHALL BE LOAD-RATED AND SHALL MEET ALL CODE REQUIREMENTS AND SAFETY FACTORS WHICH APPLY.

C. WIRE, USED IN LIEU OF STRAPS AND RODS, IS NOT ALLOWED

D. WHERE APPLICABLE, INSTALL INSULATION AFTER INSTALLING DUCT HANGERS.

E. SEISMIC BRACING NOT REQUIRED ON RECTANGULAR AND ROUND DUCT WITH CROSS SECTIONAL AREA EQUAL TO 6 sq.ft OR LESS, OR WEIGH 10 lbs/ft OR LESS, AND ARE WITHIN 12" OF STRUCTURE PER OPM 0043-13 PAGE A4.0.

F. SUPPORTS SHALL BE PLACED AT 10'-0" ON CENTER (MAX) FOR ROUND DUCTS AND AT ALL CHANGES IN DIRECTION. RECTANGULAR DUCT SUPPORTS SHALL BE PLACED AT 8'-0" ON CENTER (MAX) AND AT ALL CHANGES IN DIRECTION.

G. DUCTS GREATER THAN 12" FROM STRUCTURE PER OPM 0043-13 PAGE A4.0 SHALL REQUIRE FOUR WAY SEISMIC CABLE SUPPORTS REQUIRED FOR TRAPEZE AT 40' MAX SPACING PER OPM 0043-13 PAGE D4.22. MIN (2) PER DUCT RUN. FOR RECTANGULAR DUCT LESS THAN 10LBS/FT, USE OPM 0043-13 PAGE D4.12. ROUND DUCTS SHALL REQUIRE FOUR WAY SEISMIC CABLE SUPPORTS AT 40 FT MAX SPACING PER OPM 0043-13 PAGE D6.12 MIN (2) PER DUCT RUN.

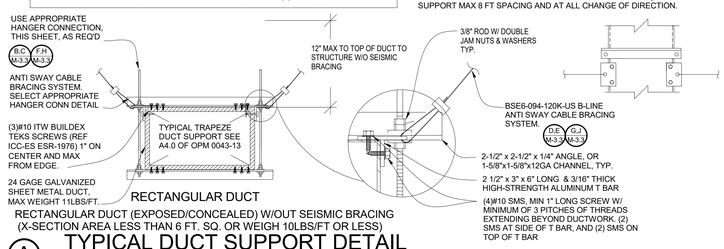

RECTANGULAR DUCT (EXPOSED/CONCEALED) W/OUT SEISMIC BRACING (X-SECTION AREA LESS THAN 6 FT. SQ. OR WEIGH 10LBS/FT OR LESS)

A TYPICAL DUCT SUPPORT DETAIL

SCALE: NTS

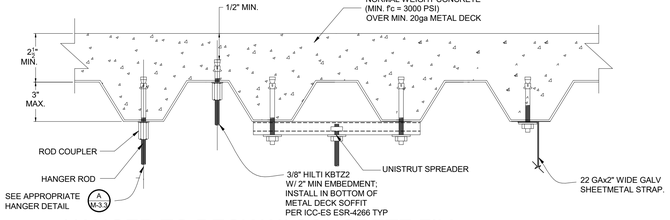

F HANGER TO DECK W/ CONCRETE FILL

SCALE: NTS

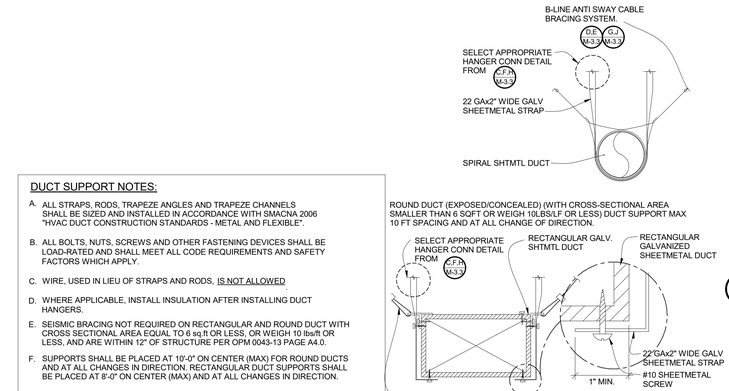

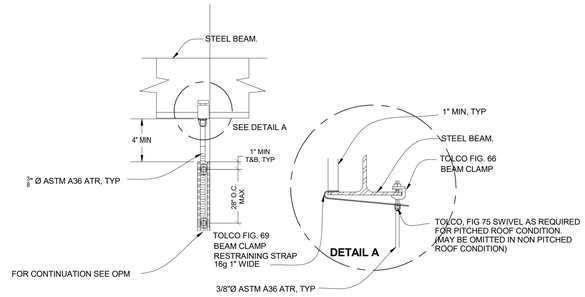

B SUPPORT TO BEAM BLDG A

SCALE: NTS

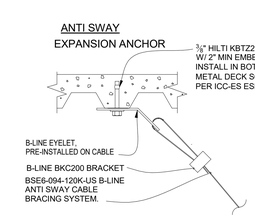

D ANTI SWAY TO FILLED DECK BLDG A

SCALE: NTS

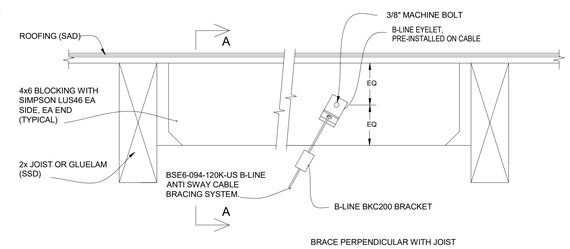

G ANTI SWAY CONNECTION @ 2X JOIST OR GLULAM

SCALE: NONE

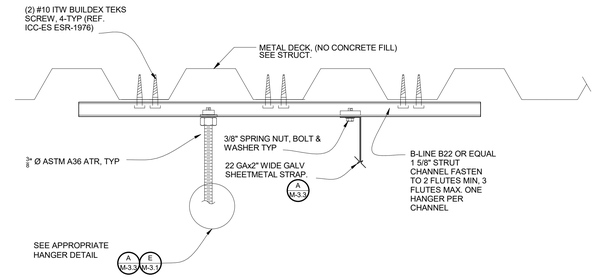

C HANGER TO NON FILLED DECK BLDG A & B

SCALE: NTS

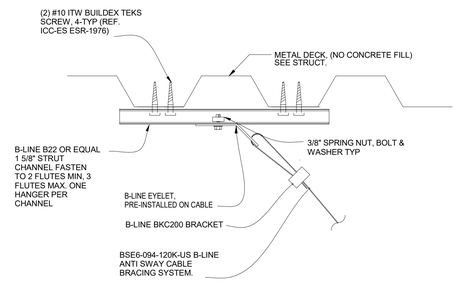

E ANTI SWAY CONNECTION TO NON FILLED DECK BLDG A & B

SCALE: NTS

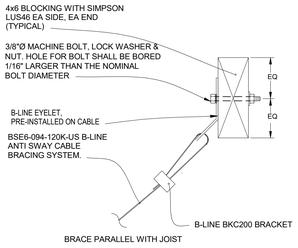

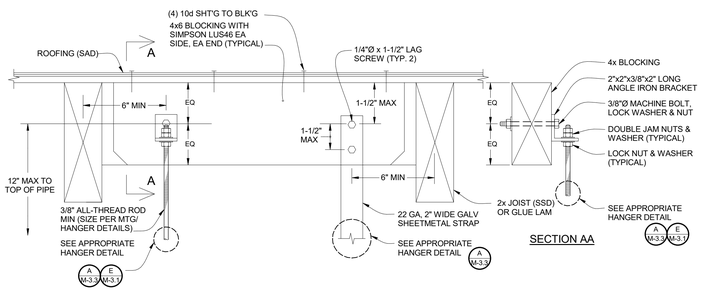

H HANGER CONNECTION @ 2X JOIST OR GLULAM

SCALE: NONE

BRACE ANGLE RANGE ∡	MAX ALLOWABLE FORCE PER SEISMIC BRACE ASSEMBLY, Fp
30° - 45°	270 LBS
46° - 60°	190 LBS

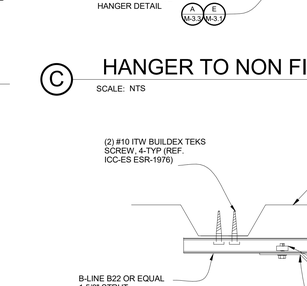

J SEISMIC BRACE CONNECTION @ 2X JOIST OR GLULAM

SCALE: NONE

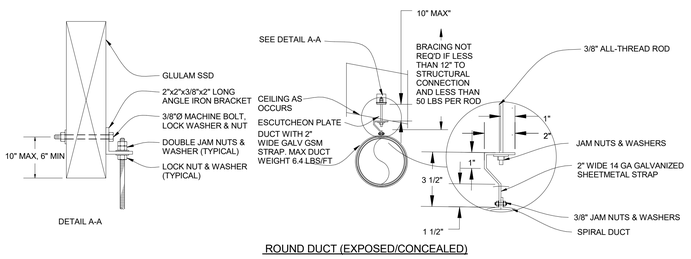

K ROUND DUCT SUPPORT DETAIL AT BLDG B

SCALE: NONE

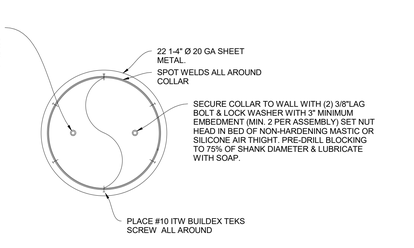

L END OF ROUND DUCT SUPPORT

SCALE: NONE

IDENTIFICATION STAMP
DIV. OF THE STATE ARCHITECT
APP: 01-119994 INC:
REVIEWED FOR
SS ☑ FLS ☑ ACS ☑
DATE: 08/16/2022

QUATTROCCHI KWOK ARCHITECTS

Main Office:
636 Fifth Street, Santa Rosa, CA 95404
Pleasanton Office:
600 Main Street, Suite E,
Pleasanton, CA 94566
(707) 576-0829

COSTA ENGINEERS INC.

REGISTERED PROFESSIONAL ENGINEER CHRISTOPHER J. DEL BOSKE No. 30000 Exp. 12-31-22 MECHANICAL STATE OF CALIFORNIA

LIBERTY HIGH SCHOOL

NEW CLASSROOM BUILDING

850 2ND STREET
BRENTWOOD, CA
94513

LIBERTY UNION HIGH SCHOOL DISTRICT

REVISIONS

DSA APP NO. 01-119994

ARCH PROJECT NO: 1925.00
DRAWN BY: Author
DRAWING SCALE:
PTN: 61721-83 FILE NO: 7-H4

CONSTRUCTION DOCUMENTS

JUNE 24, 2022

SHEET TITLE

MECHANICAL DETAILS

SHEET NUMBER

M-3.3

7/26/2022 4:23:34 PM

C:\Users\bmungandi\OneDrive - Costa Engineers\Documents\21038 Liberty HS Classroom Bldg RVT20_bMungandi.rvt

FORM NO.: ________

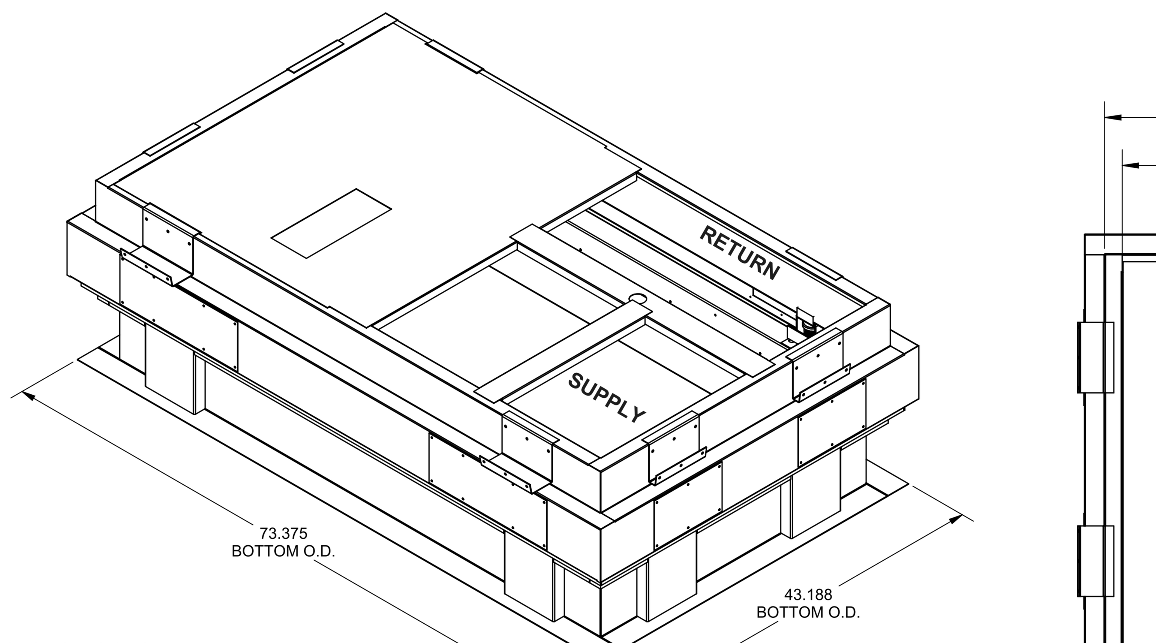

PLAN VIEW

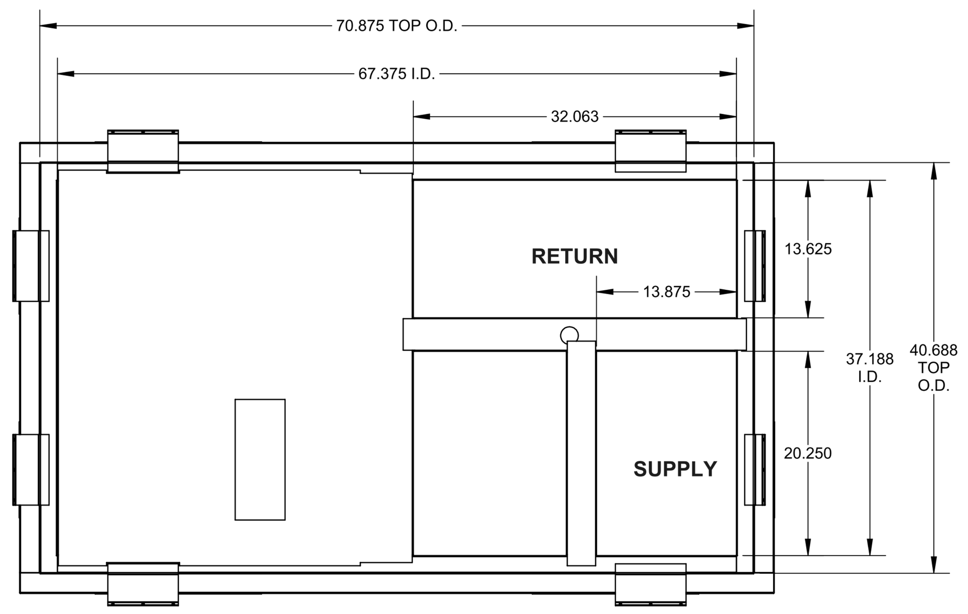

SEISMIC DESIGN CRITERIA:
- Ip = 1.5
- Ss = 2.50
- Fa = 1.2

WIND DESIGN CRITERIA:
- 60 FT. TALL BUILDING MAX.
- EXPOSURE C
- 155 MPH, 3-SECOND GUST WIND SPEED
- RISK CATEGORY III & IV

CURB ISOLATOR/STIFFENER MINIMUM REQUIREMENTS:
- (2) STIFFENERS, (2) MICROHOLDS, (2) ISOLATORS PER LONG SIDE
- (2) STIFFENERS, (2) MICROHOLDS, (2) ISOLATORS PER SHORT SIDE

THE STANDARD PRODUCT DOES NOT INCLUDE THROUGH THE SIDE SERVICE HOLES

MicroMetl Corporation

CRBV-SRT12GA-08 SERIES (8" TALL BASE CURB) 18" TALL 329 LBS.
CRBV-SRT12GA-11 SERIES (11" TALL BASE CURB) 21" TALL 347 LBS.
CRBV-SRT12GA-14 SERIES (14" TALL BASE CURB) 24" TALL 365 LBS.
CRBV-SRT12GA-24 SERIES (24" TALL BASE CURB) 34" TALL 425 LBS.
CRBV-SRT12GA-36 SERIES (36" TALL BASE CURB) 46" TALL 500 LBS.

STRUCTURALLY CALCULATED VIBRATION ISOLATION CURB

MAX UNIT WEIGHT 1099 lbs.

Indianapolis, IN. : (800) 662-4822
Sparks, NV. (800) 884-4662
Longview, TX. (903) 248-4800

DRAWN BY: IR | DATE: 08/20/2019

MEETS SEISMIC REQUIREMENTS FOR 2019 CBC & 2018 IBC

MEETS REQUIREMENTS FOR 155 MPH, 60' BUILDING HEIGHT MAX. 3 SEC. GUST, EXP C

TYPICAL PLAN VIEW:

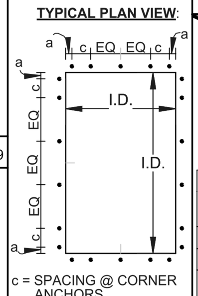

c = SPACING @ CORNER ANCHORS

ANCHORAGE DETAILS TO ROOF:

ALL DETAILS ARE CALCULATED USING THE SEISMIC DESIGN CRITERIA INDICATED ABOVE. FOR ANY OTHER TYPE OF ANCHORAGE THE EOR HAS THE OPTION TO CALCULATE THE ANCHORAGE USING SITE SPECIFIC PARAMETERS AND LOADS.

STEEL ATTACHMENT:
(BEAM BY OTHERS)
USE A307 1/2" DIA. BOLTS, W/ WASHER CENTERED ON FLANGE
a = 2"
c = 6"

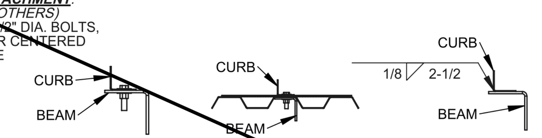

CURB HEIGHT	QTY OF ANCHORS EA. LONG SIDE	EA. SHORT SIDE	EA. CORNER	TOTL
UP TO 14"	1	1	4	20
UP TO 24"	1	1	4	20
UP TO 36"	1	1	4	20

WELD OPTION:
(2.5") LONG 1/8 FILLET WELDEDS ARE PERMITTED TO BE USED IN PLACE OF EACH BOLT INDICATED BY THE STEEL ATTACHMENT DETAIL, EQUALLY SPACED

WOOD ATTACHMENT:
(REF. DOUGLAS FIR)
USE 1/4" x 3" SIMPSON SDS W/ WASHER, CENTERED ON CURB FLANGE
a = 1"
c = 3"

CURB HEIGHT	QTY OF ANCHORS EA. LONG SIDE	EA. SHORT SIDE	EA. CORNER	TOTL
UP TO 14"	9	2	8	54
UP TO 24"	9	2	10	62
UP TO 36"	9	2	10	62

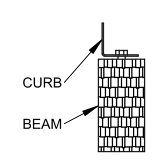

REGISTERED PROFESSIONAL ENGINEER CLIFFORD H. JOHNSON No. 2602 Exp. 6-30-21 STRUCTURAL STATE OF CALIFORNIA
10/2/19

BJG# 20190065

THE INFORMATION CONTAINED IN THIS DRAWING IS THE SOLE PROPERTY OF MICROMETL CORPORATION. ANY REPRODUCTION IN PART OR WHOLE WITHOUT THE WRITTEN PERMISSION OF MICROMETL CORPORATION. IS PROHIBITED.

ENGS03A PRINTED: 10/2/2019 Created: 10/30/2014 10:38:49 AM

PAGE 1 OF 4
CRBV-SRT12GA-XX

CURB TO UNIT ATTACHMENT DETAIL

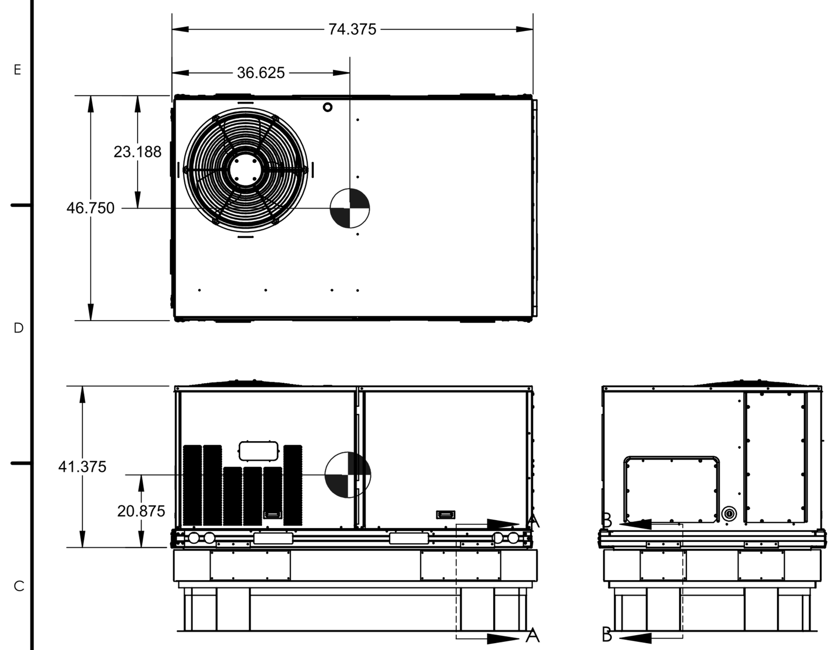

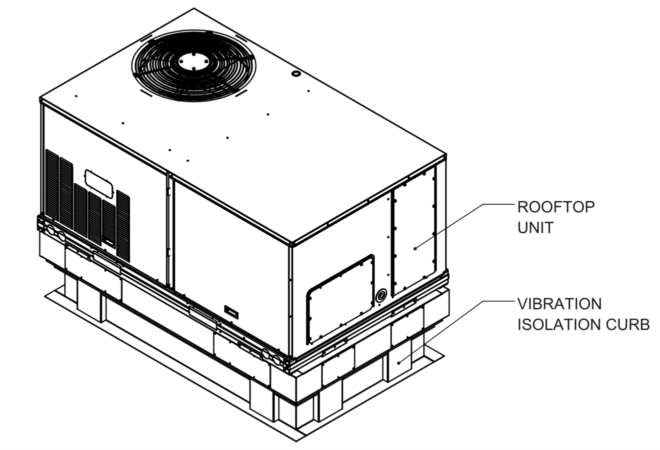

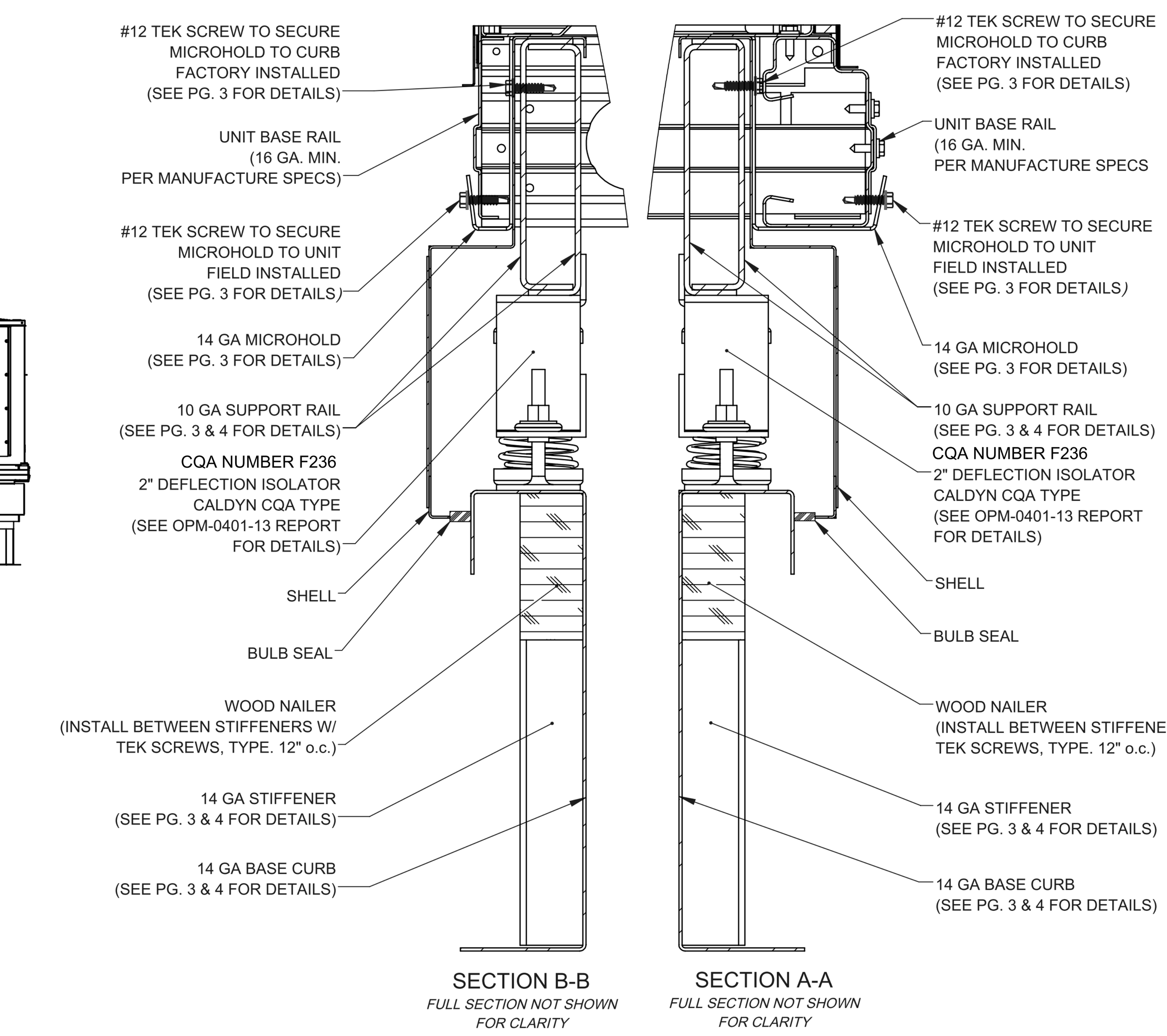

MicroMetl Corporation *Indianapolis, IN. : (800) 662-4822* *Sparks, NV. (800) 884-4662* *Longview, TX. (903) 248-4800*

THE INFORMATION CONTAINED IN THIS DRAWING IS THE SOLE PROPERTY OF MICROMETL CORPORATION. ANY REPRODUCTION IN PART OR WHOLE WITHOUT THE WRITTEN PERMISSION OF MICROMETL CORPORATION. IS PROHIBITED.

ENGS03A PRINTED: 10/2/2019 Created: 10/30/2014 10:38:49 AM

PAGE 2 OF 4
CRBV-SRT12GA-XX

FRONT VIEW / MICROHOLD DETAIL / SIDE VIEW

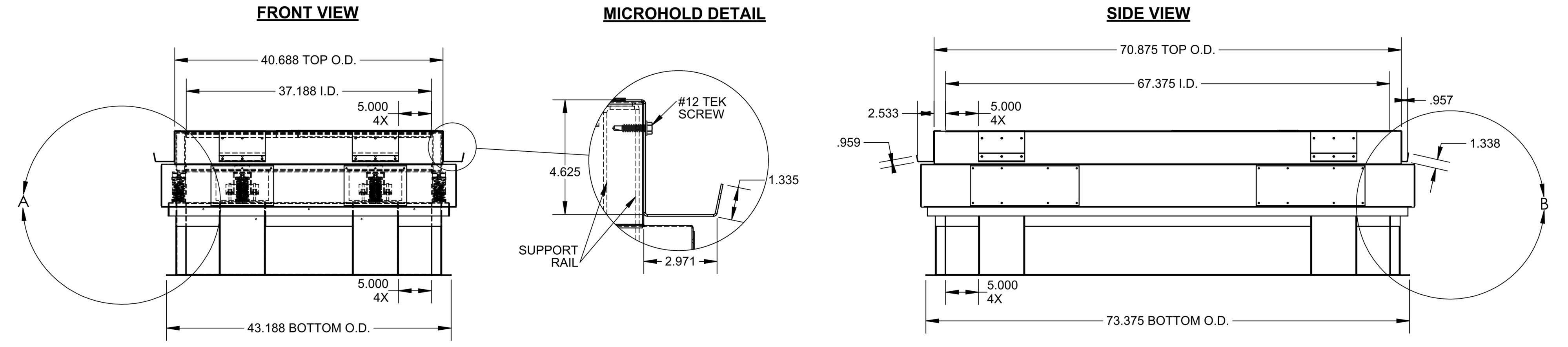

DETAIL A
LONG SIDE

DETAIL B
SHORT SIDE

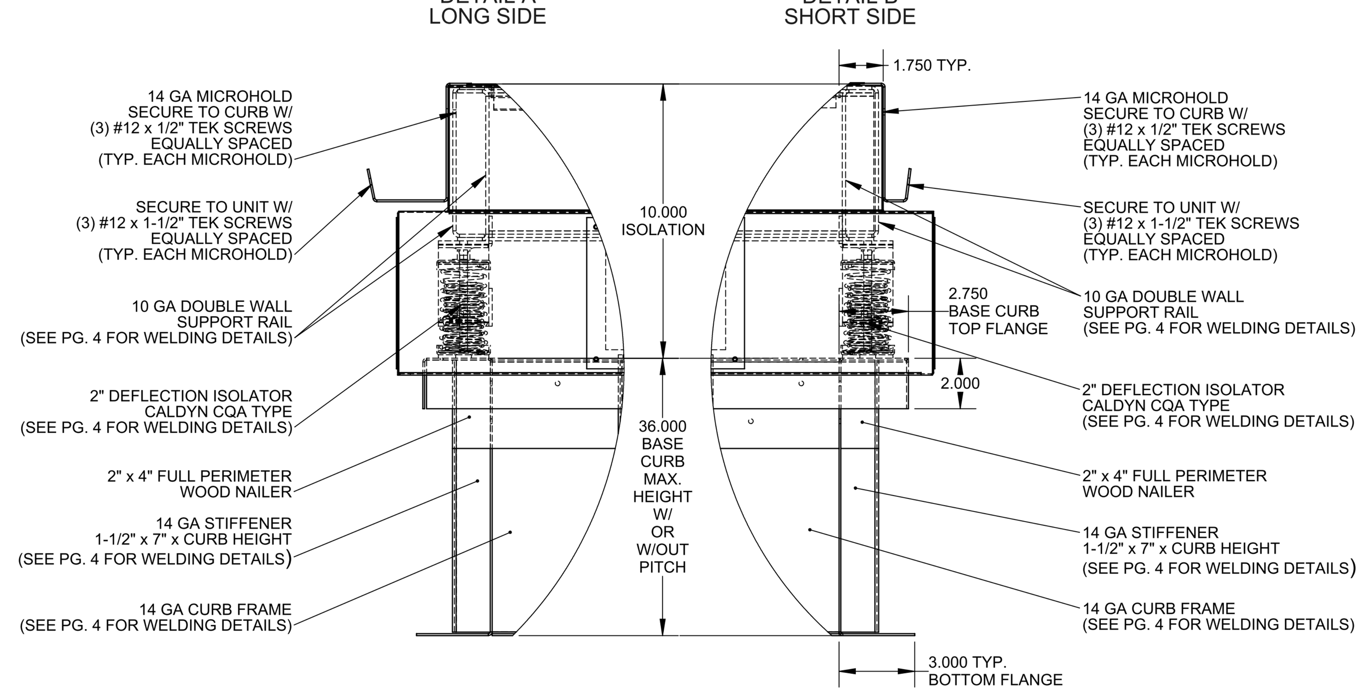

MicroMetl Corporation *Indianapolis, IN. : (800) 662-4822* *Sparks, NV. (800) 884-4662* *Longview, TX. (903) 248-4800*

THE INFORMATION CONTAINED IN THIS DRAWING IS THE SOLE PROPERTY OF MICROMETL CORPORATION. ANY REPRODUCTION IN PART OR WHOLE WITHOUT THE WRITTEN PERMISSION OF MICROMETL CORPORATION. IS PROHIBITED.

ENGS03A PRINTED: 10/2/2019 Created: 10/30/2014 10:38:49 AM

PAGE 3 OF 4
CRBV-SRT12GA-XX

BASE CURB WELDING DETAILS

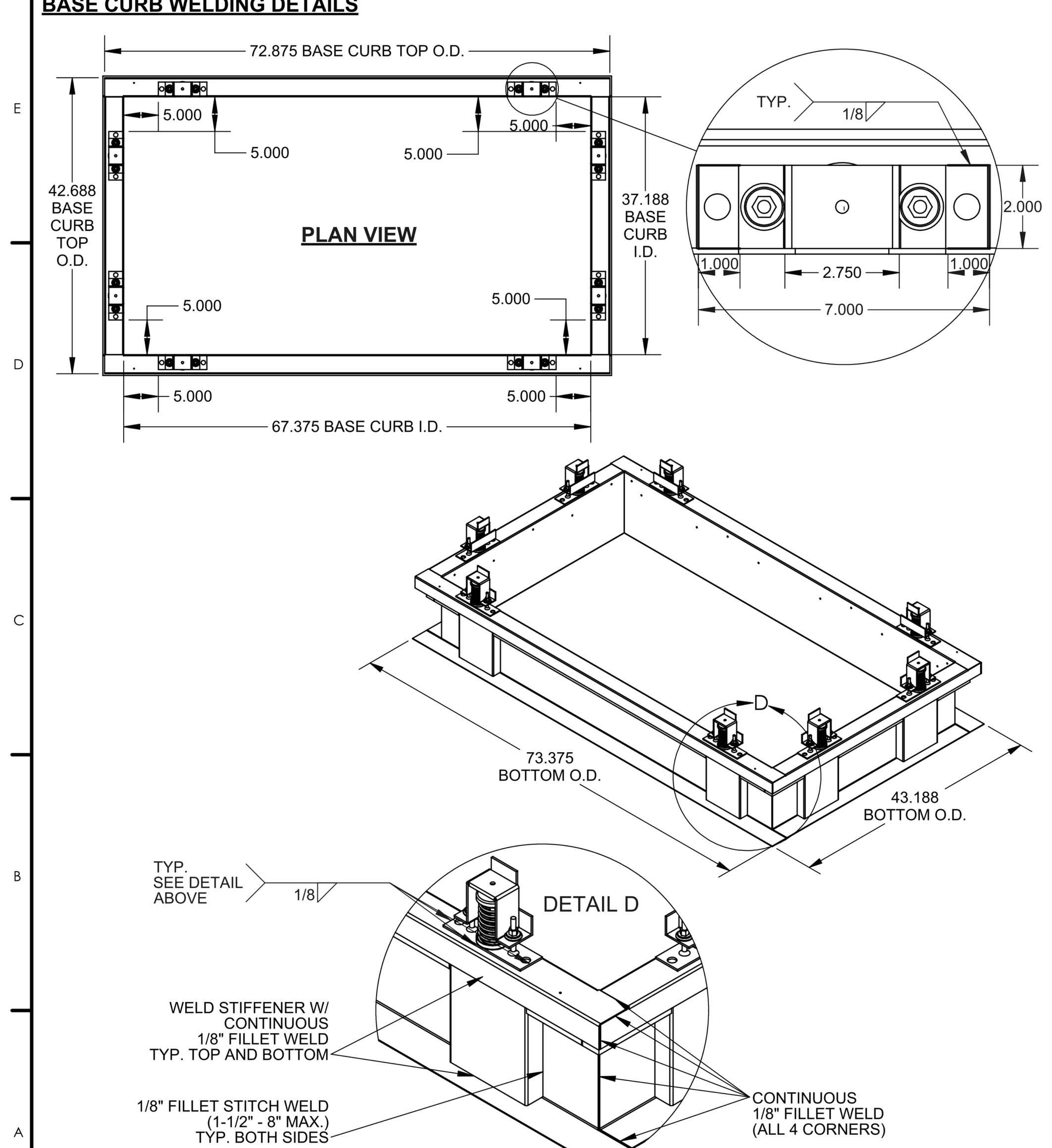

SUPPORT RAIL WELDING DETAILS

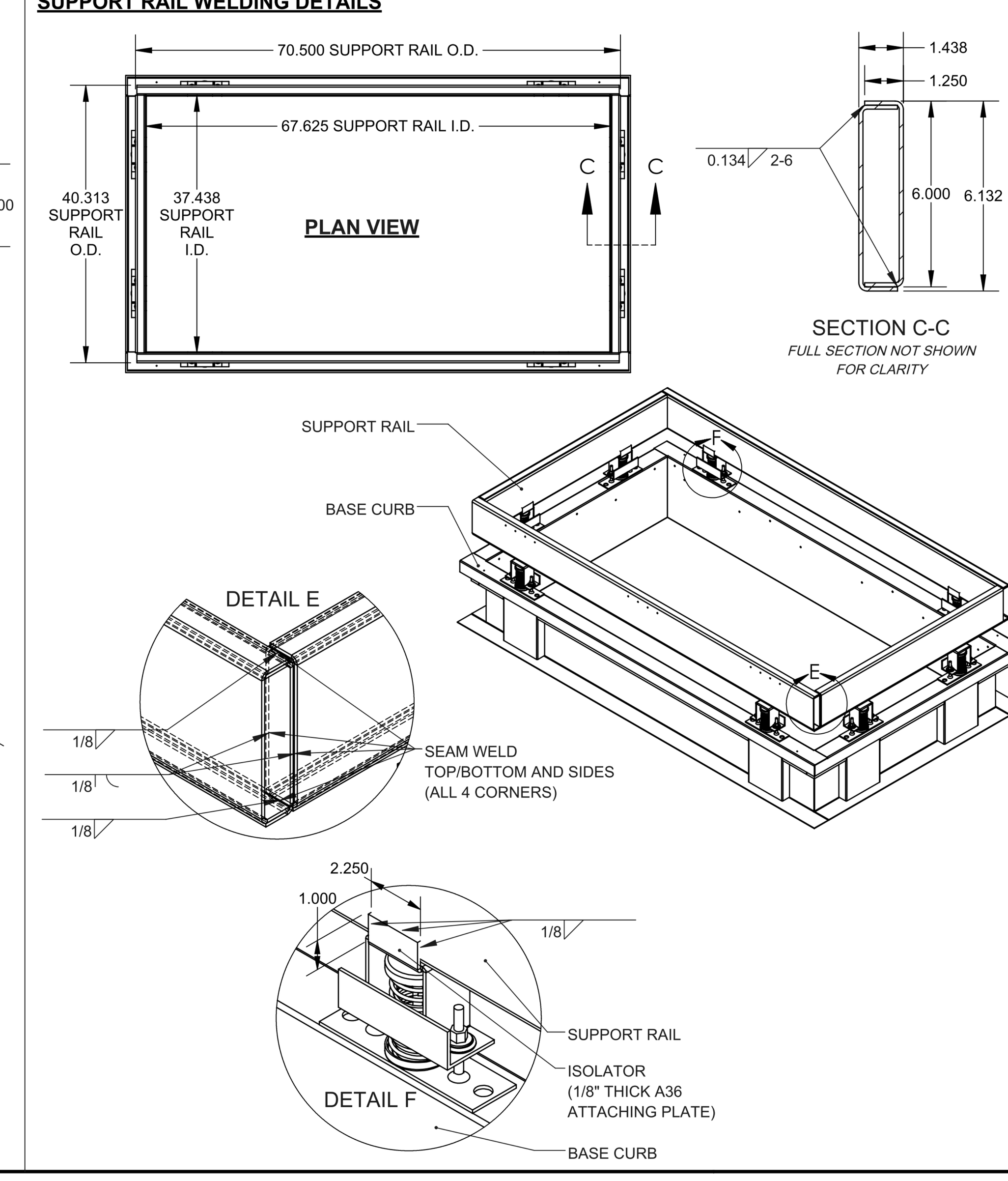

MicroMetl Corporation *Indianapolis, IN. : (800) 662-4822* *Sparks, NV. (800) 884-4662* *Longview, TX. (903) 248-4800*

THE INFORMATION CONTAINED IN THIS DRAWING IS THE SOLE PROPERTY OF MICROMETL CORPORATION. ANY REPRODUCTION IN PART OR WHOLE WITHOUT THE WRITTEN PERMISSION OF MICROMETL CORPORATION. IS PROHIBITED.

ENGS03A PRINTED: 10/2/2019 Created: 10/30/2014 10:38:49 AM

PAGE 4 OF 4
CRBV-SRT12GA-XX

IDENTIFICATION STAMP
DIV. OF THE STATE ARCHITECT
APP: 01-119994 INC:
REVIEWED FOR
SS ☑ FLS ☑ ACS ☑
DATE: 08/16/2022

QUATTROCCHI KWOK ARCHITECTS
Main Office:
636 Fifth Street, Santa Rosa, CA 95404
Pleasanton Office:
600 Main Street, Suite E,
Pleasanton, CA 94566
(707) 576-0829

COSTA ENGINEERS INC.
3274 Villa Lane Napa, CA 94558 ph: 707-252-9177 fax: 707-252-6473

REGISTERED PROFESSIONAL ENGINEER CHRISTOPHER J. DEL CORE No. 31600 Exp. 12-31-22 MECHANICAL STATE OF CALIFORNIA

LIBERTY HIGH SCHOOL

NEW CLASSROOM BUILDING

850 2ND STREET
BRENTWOOD, CA
94513

LIBERTY UNION HIGH SCHOOL DISTRICT

REVISIONS

DSA APP NO. 01-119994

ARCH PROJECT NO: 1925.00
DRAWN BY: Author
DRAWING SCALE:
PTN: 61721-83 FILE NO: 7-H4

CONSTRUCTION DOCUMENTS

JUNE 24, 2022

SHEET TITLE

MECHANICAL DETAILS

SHEET NUMBER

M-3.4

7/26/2022 4:23:35 PM
C:\Users\bmungandi\OneDrive - Costa Engineers\Documents\21038 Liberty HS Classroom Bldg RVT20_bMungandi.rvt

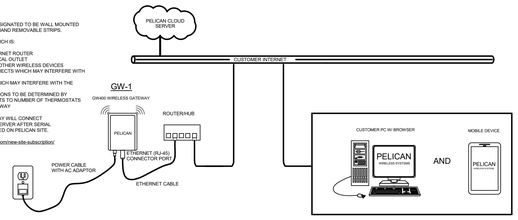

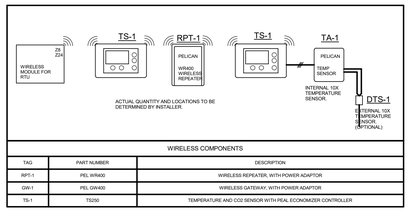

WIRELESS COMPONENTS		
TAG	PART NUMBER	DESCRIPTION
RPT-1	PEL WR400	WIRELESS REPEATER, WITH POWER ADAPTOR
GW-1	PEL GW400	WIRELESS GATEWAY, WITH POWER ADAPTOR
TS-1	TS250	TEMPERATURE AND CO2 SENSOR WITH REAL ECONOMIZER CONTROLLER

A TYPICAL PELICAN WIRELESS LAN LAYOUT

SCALE: NONE

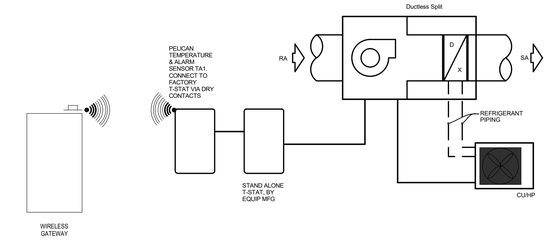

B SINGLE ZONE DUCTLESS SPLIT SYSTEM CONTROL DIAGRAM

SCALE: NONE

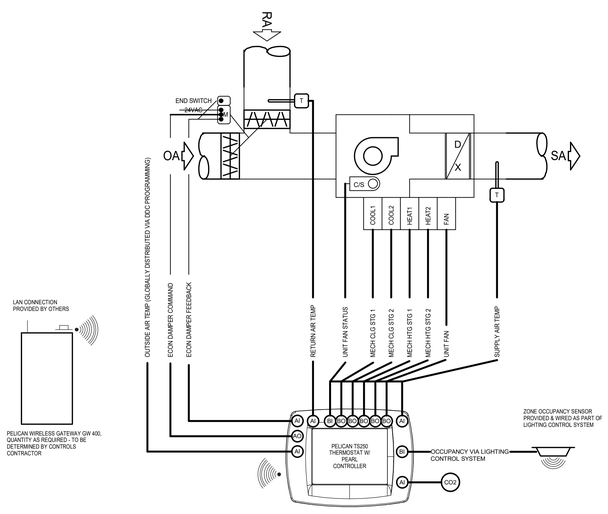

PACKAGED AC UNIT WITH ECONOMIZER, DEMAND CONTROL VENTILATION, ZONE OCCUPANCY MONITORING

1. SYSTEM OVERVIEW
   a. EACH AC UNIT WILL BE DIRECTLY CONTROLLED BY ITS OWN DEDICATED EMS (ENERGY MANAGEMENT SYSTEM) UNITARY CONTROLLER.
   b. EMS UNITARY CONTROLLER WILL BE CONNECTED TO A WALL MOUNTED ELECTRONIC ZONE TEMPERATURE SENSOR WITH INTEGRAL RELATIVE HUMIDITY SENSOR AND CO2 SENSOR.
   c. ELECTRONIC ZONE TEMPERATURE SENSOR SHALL HAVE A TOUCH SCREEN LCD INTERFACE WHICH INCLUDES: 1) DIGITAL PUSHBUTTONS FOR WARMER/COOLER SETPOINT CONTROL; 2) VISUAL DISPLAY OF ROOM TEMPERATURE, ROOM HUMIDITY, ROOM CO2 AND AMBIENT OSA TEMPERATURE; AND 3) DIGITAL PUSHBUTTON AFTER-HOURS OVERRIDE TIMER CONTROL, WITH USER ADJUSTABLE DURATION. THE AFTER-HOURS OVERRIDE DURATION SHALL HAVE THE ABILITY TO BE LIMITED FROM THE FRONT-END.
2. OCCUPANCY/VACANCY MONITORING
   a. ZONE OCCUPANCY AND VACANCY WILL BE ACTIVELY MONITORED BY CONNECTION TO LIGHTING CONTROL SYSTEM OCCUPANCY SENSOR(S). IF AVAILABLE, MONITORING SHALL BE ACCOMPLISHED VIA BACNET SYSTEM INTEGRATION. OTHERWISE, BAS CONTRACTOR SHALL MONITOR AUXILIARY CONTACTS ON LIGHTING CONTROL SYSTEM OCCUPANCY SENSOR(S).
3. UNIT FAN OPERATION
   a. WHEN THE ZONE IS IN OCCUPIED MODE OR IN AFTERHOURS MODE, THE FAN SHALL RUN CONTINUOUSLY, UNLESS VACANT MODE HAS BEEN TRIGGERED.
   b. LOW SPEED AND HIGH SPEED FAN OPERATION TO BE CONTROLLED BY AC UNIT MANUFACTURER'S INTERNAL CONTROLS INDEPENDENT OF EMS BASED UPON CALL FOR HEATING, COOLING OR VENTILATION.
   c. DURING THE UNOCCUPIED MODE AS DETERMINED BY EMS TIME SCHEDULE, THE UNIT FAN CYCLES WITH DEMAND AND THE TEMPERATURE IS CONTROLLED BY THE UNOCCUPIED SPACE TEMPERATURE HEATING AND COOLING SETPOINTS.
4. MINIMUM OUTDOOR AIR VENTILATION
   a. DURING OCCUPIED MODE OR AFTERHOURS MODE, THE ECONOMIZER DAMPER SHALL BE COMMANDED BY THE EMS UNITARY CONTROLLER TO MAINTAIN A POSITION WHICH SATISFIES THE MINIMUM OUTDOOR AIR VENTILATION REQUIREMENTS FOR THE ZONE. DAMPER POSITION(S) DETERMINED BY AIR BALANCING CONTRACTOR.
5. DEMAND CONTROL VENTILATION
   a. EMS UNITARY CONTROLLER WILL BE CONNECTED TO A WALL MOUNTED CO2 SENSOR TO MONITOR ZONE CO2 CONCENTRATION.
   b. DURING OCCUPIED MODE OR AFTERHOURS MODE, THE EMS UNITARY CONTROLLER SHALL RESET THE OUTSIDE AIR DAMPER MINIMUM POSITION TO MAINTAIN THE CO2 CONCENTRATION BELOW 1,000 PPM.
6. AUTOMATIC DEMAND REDUCTION CONTROLS
   a. EMS SHALL BE PROGRAMMED WITH CAPABILITY TO IMPLEMENT CENTRALIZED DEMAND SHED FOR ALL NON-CRITICAL ZONES UPON CALL FOR AUTOMATIC DEMAND REDUCTION. CRITICAL ZONES SHALL NOT BE IMPACTED BY DEMAND SHED CONSERVATION MEASURES.
7. VACANT MODE CONTROL
   a. WHEN THE ZONE HAS BEEN SCHEDULED FOR OCCUPANCY FOR AT LEAST ONE HOUR AND THE OCCUPANCY SENSOR HAS CONFIRMED THAT ZONE HAS BEEN VACANT FOR 5 MINUTES (ADJUSTABLE: MAXIMUM 30 MINUTES), ZONE SHALL BE PLACED INTO VACANT MODE.
   b. RESET COOLING AND HEATING SETPOINTS UP AND DOWN BY 2°F (ADJUSTABLE) OR MORE.
c. VENTILATION AIR IN A VACANT ZONE SHALL BE REDUCED TO ZERO WHEN PERMITTED TO DO SO ACCORDING TO 2019 CALIFORNIA TITLE 24 TABLE 120.1A (ALL OCCUPANCY CATEGORIES WITH NOTE "F" DESIGNATION). THE UNIT FAN SHALL BE SHUT OFF AND THE ECONOMIZER SHALL BE CLOSED TO THE OUTSIDE AIR. FOR ALL OTHER ZONES, THE ECONOMIZER SHALL BE SET TO MINIMUM OUTDOOR AIR POSITION AND THE UNIT FAN SHALL OPERATE TO PROVIDE MINIMUM VENTILATION DURING VACANT MODE.
   d. UPON DETECTION OF OCCUPANCY, VACANT MODE SHALL BE CLEARED.
8. ZONE PRE-OCCUPANCY PURGE
   a. THE EMS SHALL SCHEDULE THE ZONE TO BE IN OCCUPIED MODE ONE HOUR PRIOR TO THE ACTUAL TIME OF ANTICIPATED OCCUPANCY.
9. HEATING OPERATION
   a. THE CONTROLLER COMPARES THE HEATING SETPOINT WITH THE SPACE TEMPERATURE AND DETERMINES A NEED-HEATING CONTROL SIGNAL TO STAGE A GAS REGULATING VALVE ON THE UNIT.
   b. ECONOMIZER TO BE COMMANDED TO MIN CFM SETPOINT AND MECHANICAL COOLING TO BE LOCKED OUT DURING HEATING MODE.
10. COOLING OPERATION
   a. THE CONTROLLER COMPARES THE COOLING SETPOINT WITH THE SPACE TEMPERATURE AND DETERMINES A NEED-COOLING SIGNAL.
   b. THE FIRST STAGE OF COOLING WILL ENABLE THE ECONOMIZER TO PROVIDE FREE COOLING FOR AS LONG AS POSSIBLE.
   c. THE SECOND STAGE WILL ENABLE THE COMPRESSOR(S) TO MAINTAIN THE ROOM SET POINT.
   d. MECHANICAL HEATING TO BE LOCKED OUT DURING COOLING MODE.
11. FAULT DETECTION DIAGNOSTICS
   a. THE EMS DDC CONTROLLER SHALL MONITOR THE FOLLOWING ECONOMIZER ACTUATOR FAULT DETECTION DIAGNOSTIC CONDITIONS AND BROADCAST RESULTS VIA EMS NETWORK:
   i. TEMPERATURE SENSOR FAILURE/FAULT
   ii. ECONOMIZER NOT ECONOMIZING WHEN ENABLED
   iii. ECONOMIZER ECONOMIZING WHEN DISABLED
   iv. ECONOMIZER DAMPER MODULATION FAILURE
   v. EXCESS OUTDOOR AIR
12. MONITORING - THE FOLLOWING CONDITIONS SHALL BE MONITORED AND DISPLAYED AT EMS OPERATOR WORKSTATION/GRAPHICAL USER INTERFACE:
   a. SUPPLY AIR TEMPERATURE.
   b. ROOM TEMPERATURE.
   c. ROOM CO2 CONCENTRATION.
   d. ROOM OCCUPANCY STATUS.
   e. CURRENT MODE (HEATING/COOLING/FAN).
   f. SUPPLY AIR TEMPERATURE ATTAINED LAST TIME UNIT WAS IN HEATING.
   g. SUPPLY AIR TEMPERATURE ATTAINED LAST TIME UNIT WAS IN COOLING.
   h. CURRENT COMMAND STATUS OF FAN, ECONOMIZER, COMPRESSOR AND GAS VALVE.
   i. RUN TIME METERS ON FAN, COMPRESSOR, AND HEAT.
   j. FAN STATUS THRU CURRENT SWITCH.
   k. ECONOMIZER ACTUATOR FEEDBACK STATUS.

C PACKAGE AC UNIT W/ DEMAND CONTROL VENTILATION & OCCUPANCY MONITORING

SCALE: NONE

IDENTIFICATION STAMP
DIV. OF THE STATE ARCHITECT
APP: 01-119994 INC:
REVIEWED FOR
SS ☑ FLS ☑ ACS ☑
DATE: 08/16/2022

QUATTROCCHI KWOK ARCHITECTS

Main Office:
636 Fifth Street, Santa Rosa, CA 95404
Pleasanton Office:
600 Main Street, Suite E,
Pleasanton, CA 94566
(707) 576-0829

COSTA ENGINEERS INC.

REGISTERED PROFESSIONAL ENGINEER
CHRISTOPHER J. DEL BOSKE
No. 30000
Exp. 12-31-22
MECHANICAL
STATE OF CALIFORNIA

LIBERTY HIGH SCHOOL

NEW CLASSROOM BUILDING

850 2ND STREET
BRENTWOOD, CA
94513

LIBERTY UNION HIGH SCHOOL DISTRICT

REVISIONS

DSA APP NO. 01-119994

ARCH PROJECT NO: 1925.00
DRAWN BY: Author
DRAWING SCALE:
PTN: 61721-83 FILE NO: 7-H4

CONSTRUCTION DOCUMENTS

JUNE 24, 2022

SHEET TITLE

CONTROL DIAGRAMS

SHEET NUMBER

M-4.1

7/26/2022 4:23:35 PM

C:\Users\bmungandi\OneDrive - Costa Engineers\Documents\21108 Liberty HS Classroom Bldg RVT20_bMungandi.rvt

Heat Pump Unit with Economizer, Smoke Detector, Power Exhaust, Demand Control Ventilation, Zone Occupancy Monitoring

1. System Overview
a. Each Heat Pump unit will be directly controlled by its own dedicated EMS (Energy Management System) unitary controller.
b. EMS unitary controller will be connected to a wall mounted electronic zone temperature sensor with integral relative humidity sensor and CO2 sensor.
c. Electronic zone temperature sensor shall have a touch screen LCD interface which includes: 1) digital pushbuttons for warmer/cooler setpoint control; 2) visual display of room temperature, room humidity, room CO2 and ambient OSA temperature; and 3) digital pushbutton after-hours override timer control, with user adjustable duration. The after-hours override duration shall have the ability to be limited from the front-end.
2. Occupancy/Vacancy Monitoring
a. Zone occupancy and vacancy will be actively monitored by connection to Lighting Control System occupancy sensor(s). If available, monitoring shall be accomplished via BACnet system integration. Otherwise, BAS contractor shall monitor auxiliary contacts on Lighting Control System occupancy sensor(s).
3. Unit Fan Operation
a. When the zone is in Occupied Mode or in Afterhours Mode, the fan shall run continuously, unless Vacant Mode has been triggered.
b. During the Unoccupied Mode as determined by EMS time schedule, the unit fan cycles with demand and the temperature is controlled by the unoccupied space temperature heating and cooling setpoints.
4. Minimum Outdoor Air Ventilation
a. During Occupied Mode or Afterhours Mode, the economizer damper shall be commanded by the EMS unitary controller to maintain a position which satisfies the Minimum Outdoor Air ventilation requirements for the zone. Damper position(s) determined by Air Balancing Contractor.
5. Demand Control Ventilation
a. EMS unitary controller will be connected to a wall mounted CO2 sensor to monitor zone CO2 concentration.
b. During Occupied Mode or Afterhours Mode, the EMS unitary controller shall reset the outside air damper minimum position to maintain the CO2 concentration below 1,000 ppm.
6. Automatic Demand Reduction Controls
a. EMS shall be programmed with capability to implement centralized demand shed for all non-critical zones upon call for Automatic Demand Reduction. Critical zones shall not be impacted by demand shed conservation measures.
7. Vacant Mode Control
a. When the zone has been scheduled for occupancy for at least one hour and the occupancy sensor has confirmed that zone has been vacant for 5 minutes (adjustable: maximum 30 minutes), zone shall be placed into Vacant Mode.
b. Reset cooling and heating setpoints up and down by 2°F (adjustable) or more.
c. Ventilation air in a Vacant zone shall be reduced to zero when permitted to do so according to 2019 California Title 24 Table 120.1A (all Occupancy Categories with Note "F" designation). The unit fan shall be shut off and the economizer shall be closed to the outside air. For all other zones, the economizer shall be set to Minimum Outdoor Air position and the unit fan shall operate to provide minimum ventilation during Vacant Mode.
d. Upon detection of occupancy, Vacant Mode shall be cleared.
8. Zone Pre-Occupancy Purge
a. The EMS shall schedule the zone to be in Occupied Mode one hour prior to the actual time of anticipated occupancy.
9. Heating operation
a. The controller compares the heating setpoint with the space temperature and determines a need-heating control signal to engage the compressor and reversing valve (according to Heat Pump Unit manufacturer's instruction for heating cycle) to maintain the room set point.
b. If further heating is required after compressor/reversing valve heating is active for 15 minutes (adjustable), engage auxiliary electric heat.
c. Economizer to be commanded to Min CFM setpoint during heating mode.
10. Cooling operation
a. The controller compares the cooling setpoint with the space temperature and determines a need-cooling signal.
b. The first stage of cooling will enable the economizer to provide free cooling for as long as possible.
c. Power exhaust shall energize when outside air damper reaches 50% open position (adj), and/or when room pressure reaches 0.02" w.c. (adj) as determined by Test & Balancer.
d. The second stage of cooling will enable the compressor and reversing valve (according to Heat Pump Unit manufacturer's instruction for cooling cycle) to maintain the room set point.
11. Power Exhaust
a. All Power Exhaust fan operations shall be controlled by separate non-EMS external devices as provided by the HP Unit Manufacturer.
12. Fault Detection Diagnostics
a. The EMS DDC Controller shall monitor the following economizer actuator Fault Detection Diagnostic conditions and broadcast results via EMS network:
- Temperature Sensor Failure/Fault
- Economizer not economizing when enabled
- Economizer economizing when disabled
- Economizer damper modulation failure
- Excess outdoor air

13. Monitoring - The following conditions shall be monitored and displayed at EMS Operator Workstation/Graphical User Interface:
a. Supply air temperature.
b. Room temperature.
c. Room humidity.
d. Room CO2 concentration.
e. Room occupancy status.
f. Current mode (heating/cooling/fan).
g. Supply air temperature attained last time unit was in heating.
h. Supply air temperature attained last time unit was in cooling.
i. Current command status of fan, compressor, reversing valve and aux heat.
j. Run time meters on fan, compressor, reversing valve and aux heat.
k. Fan Status thru Current Switch.
l. Economizer actuator feedback status.
m. Door/Window status (OPEN/CLOSED).

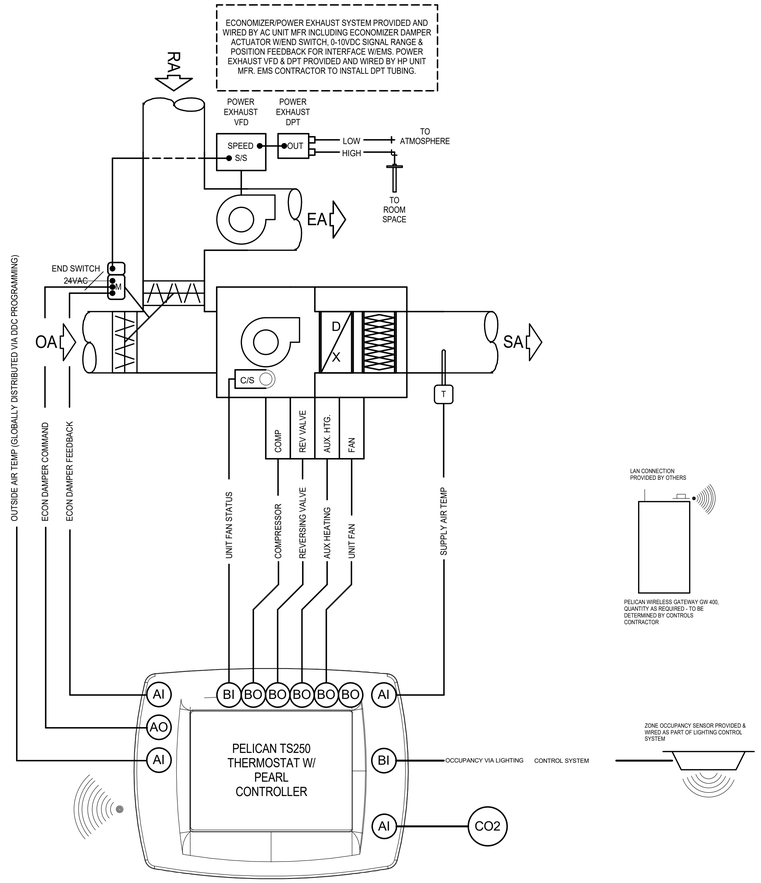

A PACKAGE HEAT PUMP UNIT W/ DEMAND CONTROL VENTILATION & OCCUPANCY MONITORING
SCALE: NONE

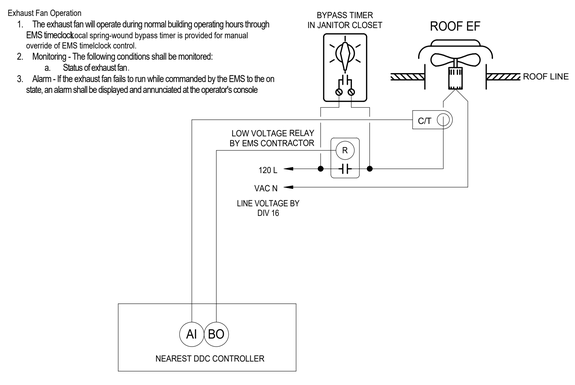

B SINGLE PHASE EF W/ MANUAL BYPASS
SCALE: NONE

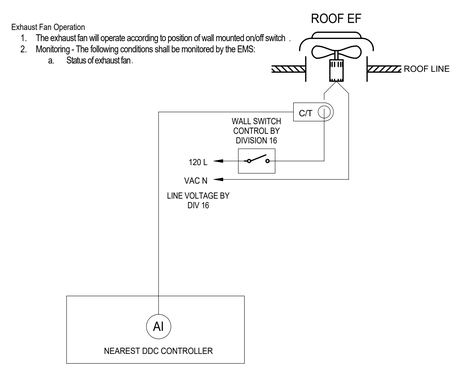

C WALL SWITCH CONTROL
SCALE: NONE

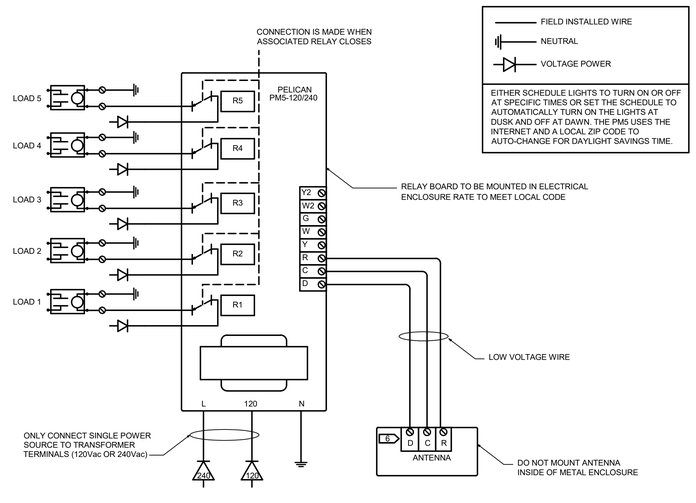

D OUTDOOR LIGHTING CONTROL
SCALE: NONE

IDENTIFICATION STAMP
DIV. OF THE STATE ARCHITECT
APP: 01-119994 INC:
REVIEWED FOR
SS ☑ FLS ☑ ACS ☑
DATE: 08/16/2022

QUATTROCCHI KWOK ARCHITECTS
Main Office:
636 Fifth Street, Santa Rosa, CA 95404
Pleasanton Office:
600 Main Street, Suite E,
Pleasanton, CA 94566
(707) 576-0829

COSTA ENGINEERS INC.
317 N Tide Gate, Stop 6, CA 94520 ph: 707.320.8787 fax: 707.320.8873
REGISTERED PROFESSIONAL ENGINEER
CHRISTOPHER J. DEL BORGO
No. 30000
Exp. 12-31-22
MECHANICAL
STATE OF CALIFORNIA

LIBERTY HIGH SCHOOL

NEW CLASSROOM BUILDING

850 2ND STREET
BRENTWOOD, CA
94513

LIBERTY UNION HIGH SCHOOL DISTRICT

REVISIONS

DSA APP NO. 01-119994
ARCH PROJECT NO: 1925.00
DRAWN BY: Author
DRAWING SCALE:
PTN: 61721-83 FILE NO: 7-H4
CONSTRUCTION DOCUMENTS
JUNE 24, 2022
SHEET TITLE

CONTROL DIAGRAMS

SHEET NUMBER

M-4.2

7/26/2022 4:23:35 PM
C:\Users\bmungandi\OneDrive - Costa Engineers\Documents\21038 Liberty HS Classroom Bldg RVT20_bMungandi.rvt

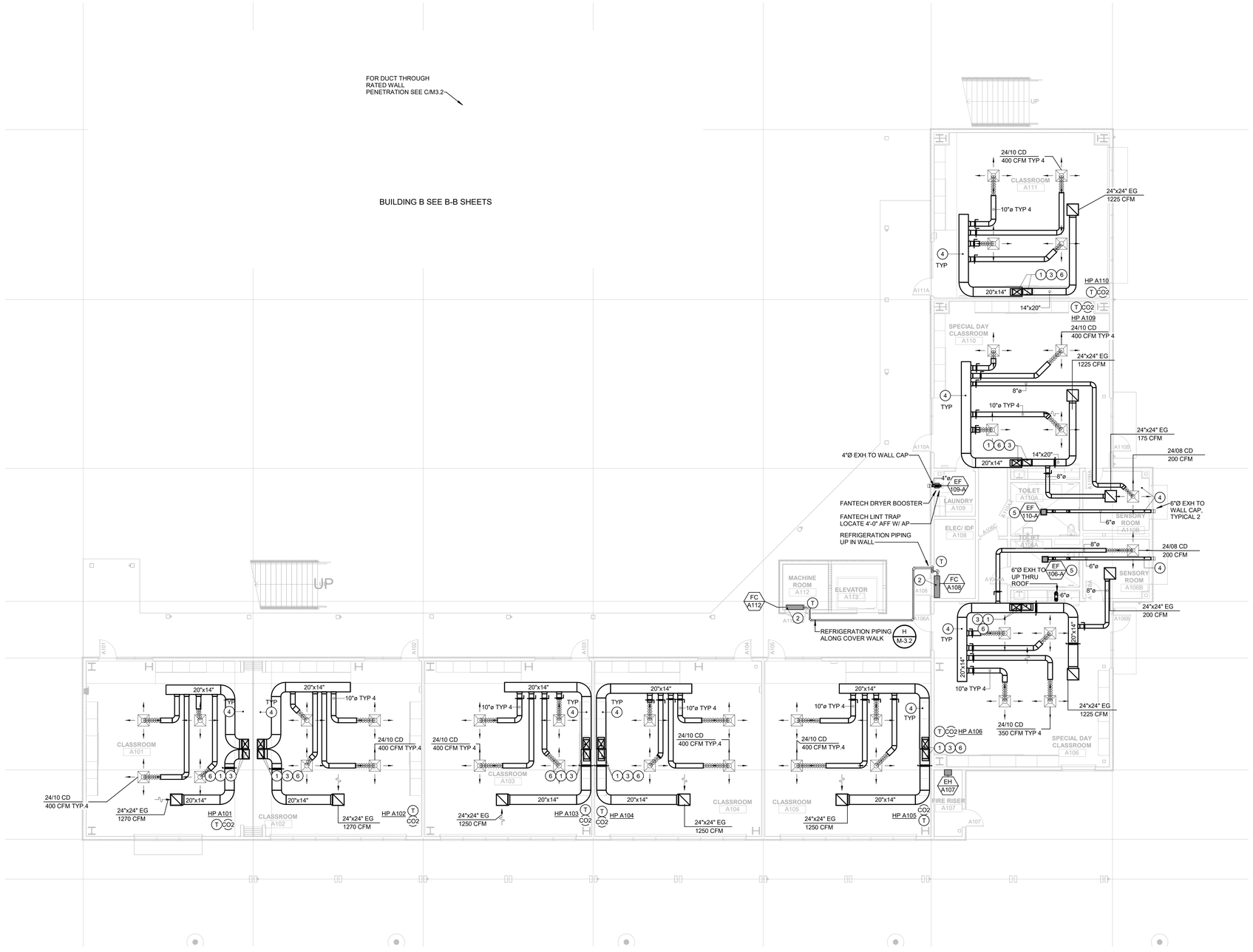

1 **BLDG A FIRST FLOOR MECHANICAL PLAN**
1/8" = 1'-0"

GENERAL NOTES

A. FOR MECHANICAL GENERAL NOTES, LEGENDS, AND SYMBOLS, REFER TO SHEET M-1.1

B. MECHANICAL CONTRACTOR SHALL BE RESPONSIBLE FOR COORDINATING THE MECHANICAL WORK WITH OTHER TRADES. MAKE ANY OFFSETS AS REQUIRED TO AVOID CONFLICT WITH PLUMBING PIPING, FIRE SPRINKLERS,FIRE PIPING, MECHANICAL PIPING, LIGHT FIXTURES, ELECTRICAL CONDUITS, SKYLIGHTS, SUPPORTS ETC...

C. CONTRACTOR SHALL COORDINATE ALL GRILLE LOCATIONS AND CEILING TYPES PRIOR TO ORDERING GRILLES, SEE ARCHITECTURAL CEILING PLANS AND ELECTRICAL LIGHTING PLANS.

D. WHERE BRACING DETAILS ARE NOT SHOWN ON THE DRAWING OR IN THE GUIDELINES, THE FIELD INSTALLATION SHALL BE SUBJECT TO THE APPROVAL OF THE ARCHITECT, MECHANICAL ENGINEER AND FIELD INSPECTOR OF THE GOVERNING AUTHORITY.

SHEET NOTES

1. SUPPLY/RETURN AIR VERTICAL RISERS SHALL HAVE SLIP-N-DRIVE DUCT CONNECTIONS
2. WALL MOUNTED FAN COIL . SEE DETAIL F/M-3.1
3. DUCT THROUGH FLOOR PENETRATION SEE J/M-3.2
4. TYPICAL DUCT SUPPORT . SEE DETAIL A/M-3.3
5. CEILING EXHAUST FAN. SEE DETAIL H/M-3.1
6. 20"x14" RA & SA UP IN CHASE TO ROOF
7. DUCT TO RANGE HOOD SAD, 6"Ø DUCT UP TO EF ON ROOF.

WALL LEGENDS

NOTES:
S.S.D. SITE SPECIFC

METAL FRAMING- 1 HR FIRE RATED WALL

METAL FRAMING - NON RATED, INSULATED

KEY PLAN

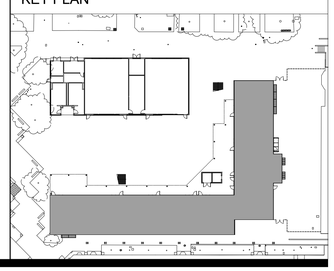

IDENTIFICATION STAMP
DIV. OF THE STATE ARCHITECT
APP: 01-119994 INC:
REVIEWED FOR
SS ☑ FLS ☑ ACS ☑
DATE: 08/16/2022

QUATTROCCHI KWOK ARCHITECTS
Main Office:
636 Fifth Street, Santa Rosa, CA 95404
Pleasanton Office:
600 Main Street, Suite E,
Pleasanton, CA 94566
(707) 576-0829

COSTA ENGINEERS INC.
317-11th Ave Tiburon, CA 94920 p: 415.435.8177 fax: 415.435.8213
REGISTERED PROFESSIONAL ENGINEER CHRISTOPHER J. DEL BOSE No. 30000 Exp. 12-31-22 MECHANICAL STATE OF CALIFORNIA

LIBERTY HIGH SCHOOL

NEW CLASSROOM BUILDING

850 2ND STREET
BRENTWOOD, CA
94513

LIBERTY UNION HIGH SCHOOL DISTRICT

REVISIONS

DSA APP NO. 01-119994

ARCH PROJECT NO:	1925.00
DRAWN BY:	MQ
DRAWING SCALE:	1/8" = 1'-0"
PTN: 61721-83	FILE NO: 7-H4

CONSTRUCTION DOCUMENTS

JUNE 24, 2022

SHEET TITLE

BLDG A - FIRST FLOOR MECHANICAL PLAN

SHEET NUMBER

M-A2.1

7/26/2022 4:23:37 PM

C:\Users\bmungandi\OneDrive - Costa Engineers\Documents\21038 Liberty HS Classroom Bldg RVT20_bMungandi.rvt

BUILDING B SEE B-B SHEETS

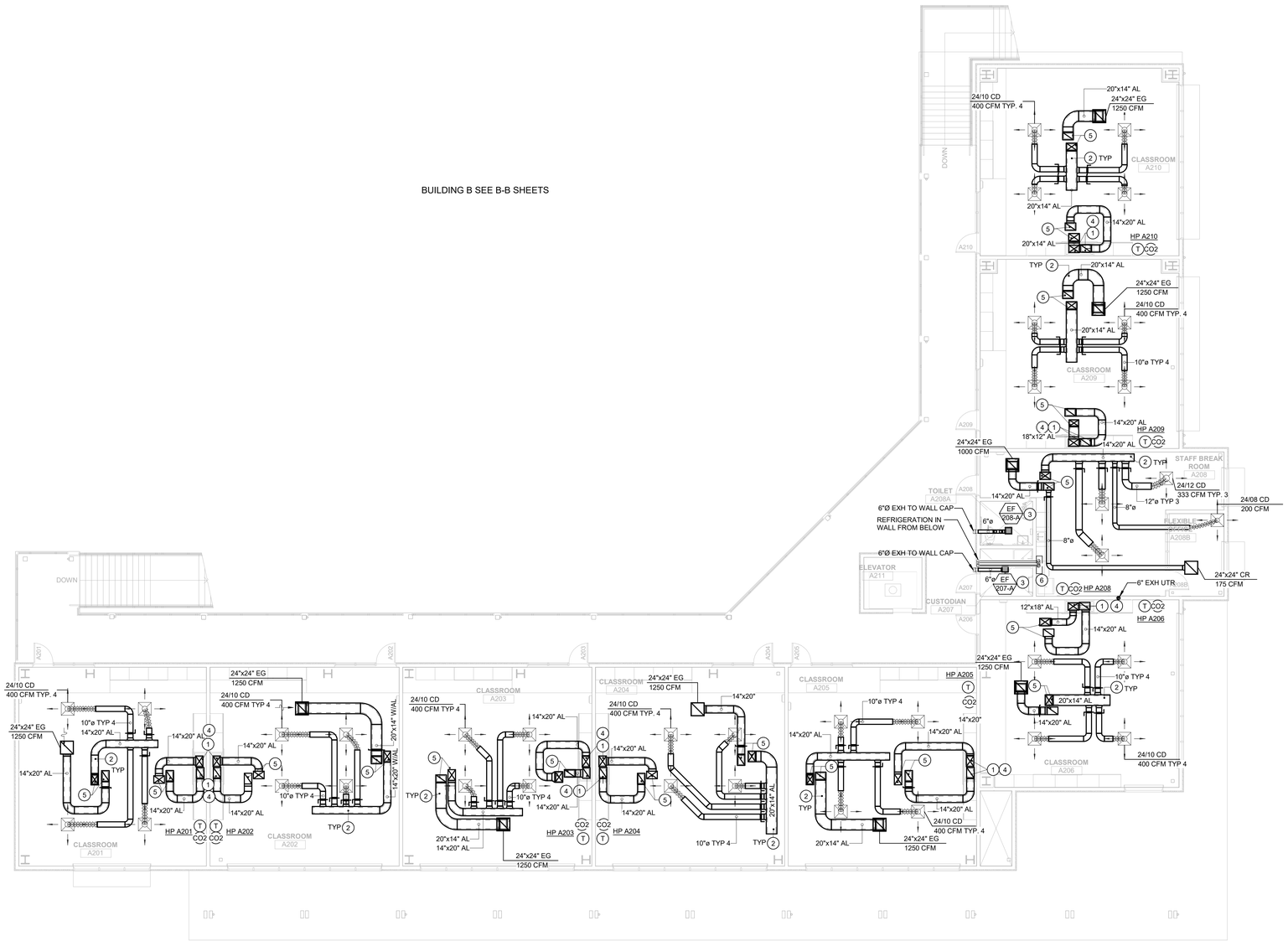

GENERAL NOTES

A. FOR MECHANICAL GENERAL NOTES, LEGENDS, AND SYMBOLS, REFER TO SHEET M-1.1

B. MECHANICAL CONTRACTOR SHALL BE RESPONSIBLE FOR COORDINATING THE MECHANICAL WORK WITH OTHER TRADES. MAKE ANY OFFSETS AS REQUIRED TO AVOID CONFLICT WITH PLUMBING PIPING, FIRE SPRINKLERS,FIRE PIPING, MECHANICAL PIPING, LIGHT FIXTURES, ELECTRICAL CONDUITS, SKYLIGHTS, SUPPORTS ETC...

C. CONTRACTOR SHALL COORDINATE ALL GRILLE LOCATIONS AND CEILING TYPES PRIOR TO ORDERING GRILLES, SEE ARCHITECTURAL CEILING PLANS AND ELECTRICAL LIGHTING PLANS.

D. WHERE BRACING DETAILS ARE NOT SHOWN ON THE DRAWING OR IN THE GUIDELINES, THE FIELD INSTALLATION SHALL BE SUBJECT TO THE APPROVAL OF THE ARCHITECT, MECHANICAL ENGINEER AND FIELD INSPECTOR OF THE GOVERNING AUTHORITY.

SHEET NOTES

1. SUPPLY/RETURN AIR VERTICAL RISERS SHALL HAVE SLIP-N-DRIVE DUCT CONNECTIONS IN ORDER TO MAXIMIZE AVAILABLE SPACE.
2. TYPICAL DUCT SUPPORT . SEE DETAIL A/M-3.3
3. CEILING EXHAUST FAN. SEE DETAIL H/M-3.1
4. 20"x14" SA (AL) & 20"x14" RA DOWN THRU CHASE TO FIRST FLOOR
5. 20"x14" SA (AL) & 20"x14" RA UP THRU ROOF TO AC UNIT
6. REFRIGERATION UP THRU ROOF SEE DETAIL F/M-3.2

WALL LEGENDS

NOTES:
S.S.D. SITE SPECIFC

METAL FRAMING- 1 HR FIRE RATED WALL

METAL FRAMING - NON RATED, INSULATED

KEY PLAN

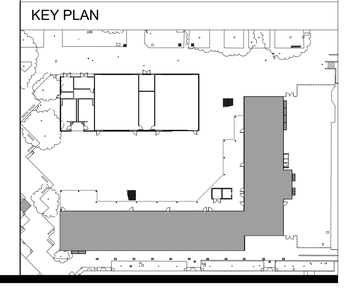

IDENTIFICATION STAMP
DIV. OF THE STATE ARCHITECT
APP: 01-119994 INC:
REVIEWED FOR
SS ☑ FLS ☑ ACS ☑
DATE: 08/16/2022

QUATTROCCHI KWOK ARCHITECTS

Main Office:
636 Fifth Street, Santa Rosa, CA 95404
Pleasanton Office:
600 Main Street, Suite E,
Pleasanton, CA 94566
(707) 576-0829

COSTA ENGINEERS INC.
317 N 5th Ave Chula Vista, CA 91910 P: "619-691" Fax "0" 2023813

REGISTERED PROFESSIONAL ENGINEER
CHRISTOPHER J. DEL BORGO
No. 30000
Exp. 12-31-22
MECHANICAL
STATE OF CALIFORNIA

LIBERTY HIGH SCHOOL

NEW CLASSROOM BUILDING

850 2ND STREET
BRENTWOOD, CA
94513

LIBERTY UNION HIGH SCHOOL DISTRICT

REVISIONS

DSA APP NO. 01-119994

ARCH PROJECT NO:	1925.00
DRAWN BY:	Author
DRAWING SCALE:	1/8" = 1'-0"
PTN: 61721-83	FILE NO: 7-H4

CONSTRUCTION DOCUMENTS

JUNE 24, 2022

SHEET TITLE
BLDG A - SECOND FLOOR MECHANICAL PLAN

SHEET NUMBER
M-A2.2

7/26/2022 4:23:39 PM

C:\Users\bmungandi\OneDrive - Costa Engineers\Documents\21038 Liberty HS Classroom Bldg R\V20_bMungandi.rvt

1 **BLDG A SECOND FLOOR MECHANICAL PLAN**
1/8" = 1'-0"

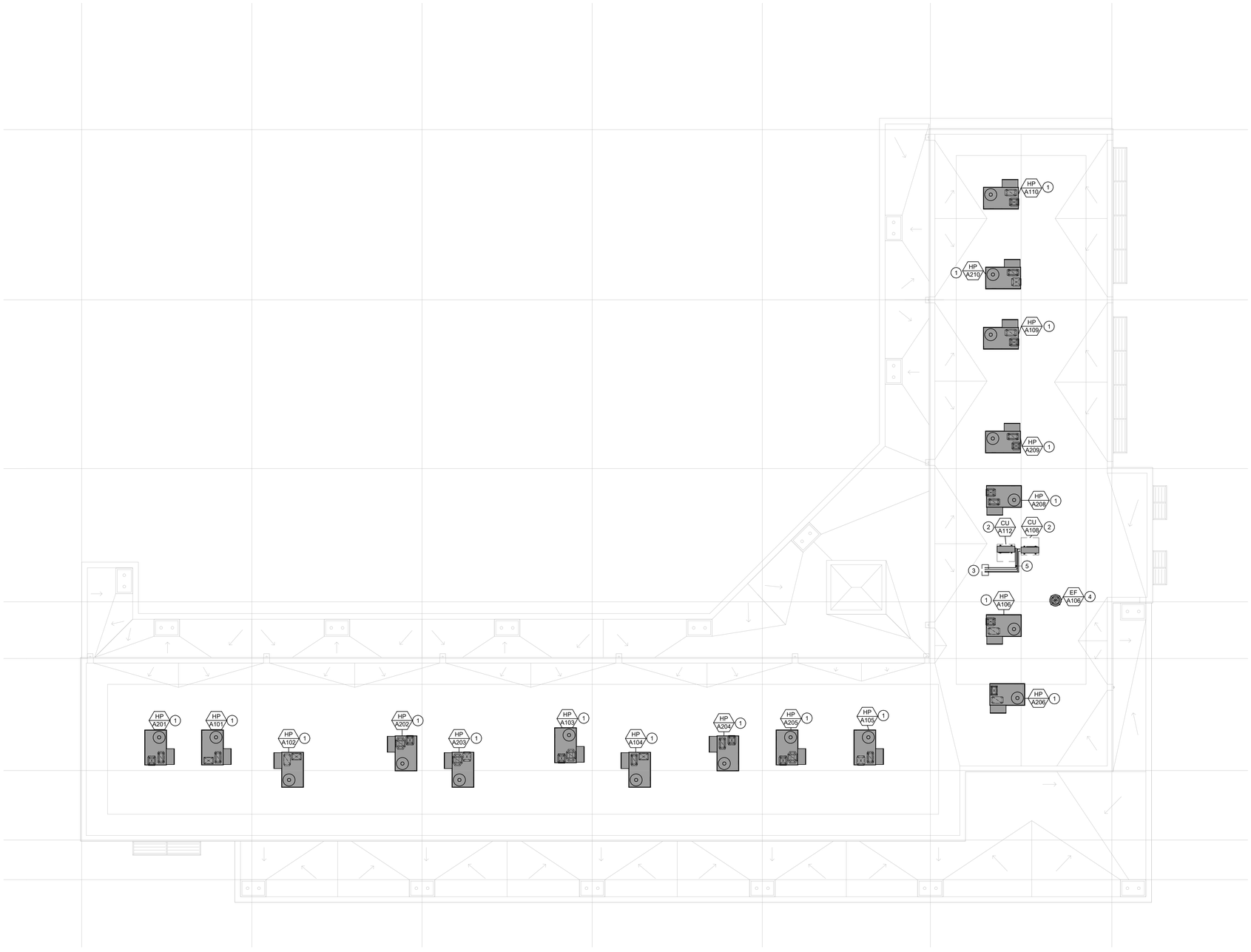

1 **BLDG A ROOF MECHANICAL PLAN**
1/8" = 1'-0"

GENERAL NOTES

A. FOR MECHANICAL GENERAL NOTES, LEGENDS, AND SYMBOLS, REFER TO SHEET M-1.1

B. MECHANICAL CONTRACTOR SHALL BE RESPONSIBLE FOR COORDINATING THE MECHANICAL WORK WITH OTHER TRADES. MAKE ANY OFFSETS AS REQUIRED TO AVOID CONFLICT WITH PLUMBING PIPING, FIRE SPRINKLERS,FIRE PIPING, MECHANICAL PIPING, LIGHT FIXTURES, ELECTRICAL CONDUITS, SKYLIGHTS, SUPPORTS ETC...

C. CONTRACTOR SHALL COORDINATE ALL GRILLE LOCATIONS AND CEILING TYPES PRIOR TO ORDERING GRILLES, SEE ARCHITECTURAL CEILING PLANS AND ELECTRICAL LIGHTING PLANS.

D. WHERE BRACING DETAILS ARE NOT SHOWN ON THE DRAWING OR IN THE GUIDELINES, THE FIELD INSTALLATION SHALL BE SUBJECT TO THE APPROVAL OF THE ARCHITECT, MECHANICAL ENGINEER AND FIELD INSPECTOR OF THE GOVERNING AUTHORITY.

SHEET NOTES

1. PACKAGE HEAT PUMP, FOR MOUNTING DETAIL SEE A / M-3.1
2. CONDENSING UNIT ON ROOF SEE DETAIL D / M-3.1
3. REFRIGERATION PIPING THRU ROOF DETAIL SEE DETAIL F / M-3.2
4. ROOFTOP EXHAUST FAN . SEE DETAIL G / M-3.1
5. REFRIGERATION PIPING ON ROOF SEE DETAIL H / M-3.2

WALL LEGENDS

NOTES:
S.S.D. SITE SPECIFC

METAL FRAMING- 1 HR FIRE RATED WALL

METAL FRAMING - NON RATED, INSULATED

KEY PLAN

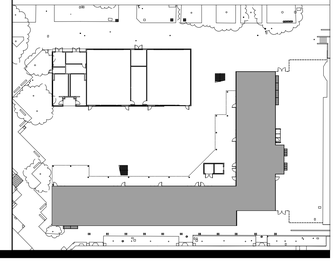

IDENTIFICATION STAMP
DIV. OF THE STATE ARCHITECT
APP: 01-119994 INC:
REVIEWED FOR
SS ☑ FLS ☑ ACS ☑
DATE: 08/16/2022

QUATTROCCHI KWOK ARCHITECTS

Main Office:
636 Fifth Street, Santa Rosa, CA 95404
Pleasanton Office:
600 Main Street, Suite E,
Pleasanton, CA 94566
(707) 576-0829

COSTA ENGINEERS INC.
573 11th Street, Napa, CA 94559 p: 707.252.8177 fax: 707.252.8873

REGISTERED PROFESSIONAL ENGINEER
CHRISTOPHER J. DEL BOSKE
No. 30000
Exp. 12-31-22
MECHANICAL
STATE OF CALIFORNIA

LIBERTY HIGH SCHOOL

NEW CLASSROOM BUILDING

850 2ND STREET
BRENTWOOD, CA
94513

LIBERTY UNION HIGH SCHOOL DISTRICT

REVISIONS

DSA APP NO. 01-119994

ARCH PROJECT NO:	1925.00
DRAWN BY:	Author
DRAWING SCALE:	1/8" = 1'-0"
PTN: 61721-83	FILE NO: 7-H4

CONSTRUCTION DOCUMENTS

JUNE 24, 2022

SHEET TITLE

BLDG A - ROOF MECHANICAL PLAN

SHEET NUMBER

M-A2.3

7/26/2022 4:23:40 PM

C:\Users\bmungandi\OneDrive - Costa Engineers\Documents\21038 Liberty HS Classroom Bldg RVT20_bMungandi.rvt

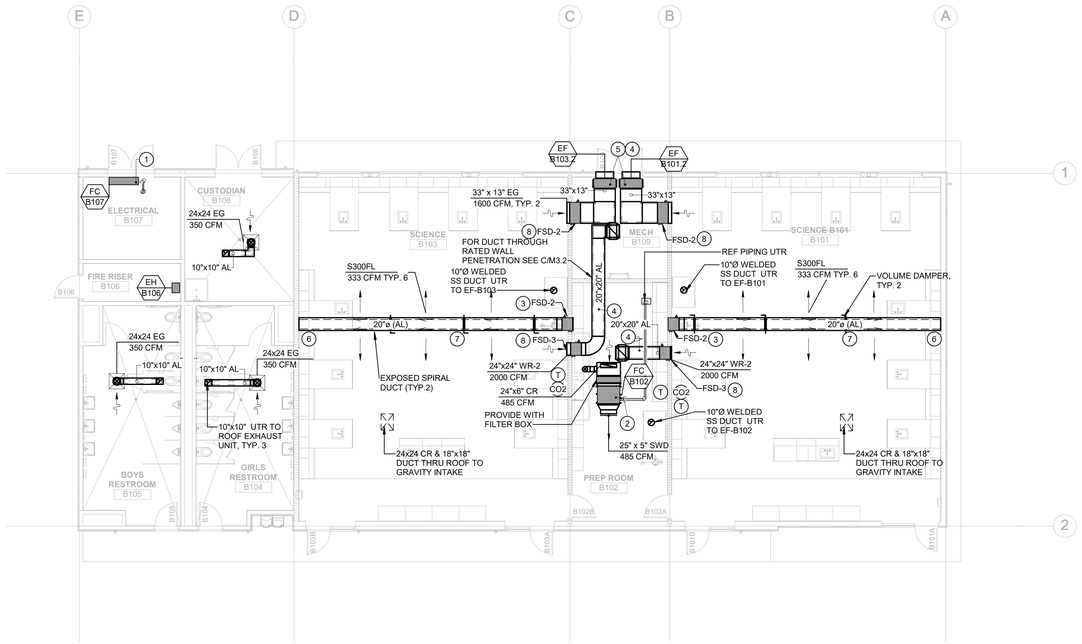

BUILDING A SEE A-A SHEETS

1 BLDG B FIRST FLOOR MECHANICAL PLAN

1/8" = 1'-0"

GENERAL NOTES

A. FOR MECHANICAL GENERAL NOTES, LEGENDS, AND SYMBOLS, REFER TO SHEET M-1.1

B. MECHANICAL CONTRACTOR SHALL BE RESPONSIBLE FOR COORDINATING THE MECHANICAL WORK WITH OTHER TRADES. MAKE ANY OFFSETS AS REQUIRED TO AVOID CONFLICT WITH PLUMBING PIPING, FIRE SPRINKLERS,FIRE PIPING, MECHANICAL PIPING, LIGHT FIXTURES, ELECTRICAL CONDUITS, SKYLIGHTS, SUPPORTS ETC...

C. CONTRACTOR SHALL COORDINATE ALL GRILLE LOCATIONS AND CEILING TYPES PRIOR TO ORDERING GRILLES, SEE ARCHITECTURAL CEILING PLANS AND ELECTRICAL LIGHTING PLANS.

D. WHERE BRACING DETAILS ARE NOT SHOWN ON THE DRAWING OR IN THE GUIDELINES, THE FIELD INSTALLATION SHALL BE SUBJECT TO THE APPROVAL OF THE ARCHITECT, MECHANICAL ENGINEER AND FIELD INSPECTOR OF THE GOVERNING AUTHORITY.

SHEET NOTES

1. WALL MOUNTED FAN COIL UNIT . FOR MOUNTING SEE DETAIL F / M-3.1
2. DUCTED FAN COIL . FOR MOUNTING SEE DETAIL E / M-3.1
3. FIRE AND SMOKE DAMPER THRU FIRE RATED WOOD WALL. SEE DETAIL B / M-3.2
4. TYPICAL DUCT SUPPORT . FOR MOUNTING SEE DETAIL A / M-3.3
5. DUCTED EXHAUST FAN UNIT . FOR MOUNTING SEE DETAIL G / M-3.1
6. END OF ROUND DUCT SUPPORT . FOR MOUNTING SEE DETAIL L / M-3.3
7. EXPOSED RUN SUPPLY DUCT SUPPORT AT WOOD BEAM SEE DETAIL K / M-3.3
8. FIRE AND SMOKE DAMPER THRU FIRE RATED WOOD WALL. WITH FRONT ACCESS SEE DETAIL D / M-3.2

WALL LEGENDS

NOTES:
S.S.D. SITE SPECIFC

WOOD FRAMING- 1 HR FIRE RATED WALL

WOOD FRAMING - NON RATED, INSULATED

KEY PLAN

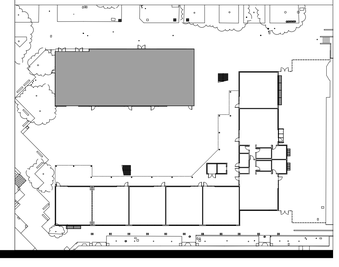

IDENTIFICATION STAMP
DIV. OF THE STATE ARCHITECT
APP: 01-119994 INC:
REVIEWED FOR
SS ☑ FLS ☑ ACS ☑
DATE: 08/16/2022

QUATTROCCHI KWOK ARCHITECTS
Main Office:
636 Fifth Street, Santa Rosa, CA 95404
Pleasanton Office:
600 Main Street, Suite E,
Pleasanton, CA 94566
(707) 576-0829

COSTA ENGINEERS INC.
3174 Ruffin Road, San Diego, CA 92123 ph: 858.277.0400 fax: 858.277.0411

REGISTERED PROFESSIONAL ENGINEER
CHRISTOPHER J. DEL BORGO
No. 30000
Exp. 12-31-22
MECHANICAL
STATE OF CALIFORNIA

LIBERTY HIGH SCHOOL

NEW CLASSROOM BUILDING

850 2ND STREET
BRENTWOOD, CA
94513

LIBERTY UNION HIGH SCHOOL DISTRICT

REVISIONS

DSA APP NO. 01-119994

ARCH PROJECT NO:	1925.00
DRAWN BY:	Author
DRAWING SCALE:	1/8" = 1'-0"
PTN: 61721-83	FILE NO: 7-H4

CONSTRUCTION DOCUMENTS

JUNE 24, 2022

SHEET TITLE

BLDG B - FIRST FLOOR MECHANICAL PLAN

SHEET NUMBER

M-B2.1

7/26/2022 4:23:41 PM

C:\Users\bmungandi\OneDrive - Costa Engineers\Documents\21039 Liberty HS Classroom Bldg RVT20_bMungandi.rvt

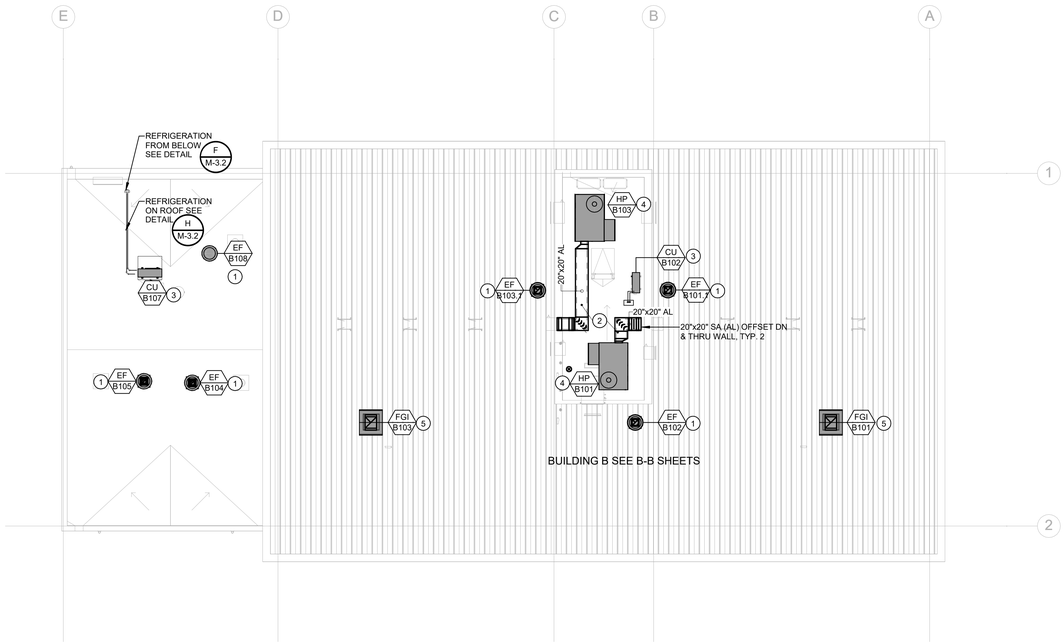

BUILDING A SEE B-B SHEETS

1 BLDG B ROOF MECHANICAL PLAN

1/8" = 1'-0"

GENERAL NOTES

A. FOR MECHANICAL GENERAL NOTES, LEGENDS, AND SYMBOLS, REFER TO SHEET M-1.1

B. MECHANICAL CONTRACTOR SHALL BE RESPONSIBLE FOR COORDINATING THE MECHANICAL WORK WITH OTHER TRADES. MAKE ANY OFFSETS AS REQUIRED TO AVOID CONFLICT WITH PLUMBING PIPING, FIRE SPRINKLERS,FIRE PIPING, MECHANICAL PIPING, LIGHT FIXTURES, ELECTRICAL CONDUITS, SKYLIGHTS, SUPPORTS ETC...

C. CONTRACTOR SHALL COORDINATE ALL GRILLE LOCATIONS AND CEILING TYPES PRIOR TO ORDERING GRILLES, SEE ARCHITECTURAL CEILING PLANS AND ELECTRICAL LIGHTING PLANS.

D. WHERE BRACING DETAILS ARE NOT SHOWN ON THE DRAWING OR IN THE GUIDELINES, THE FIELD INSTALLATION SHALL BE SUBJECT TO THE APPROVAL OF THE ARCHITECT, MECHANICAL ENGINEER AND FIELD INSPECTOR OF THE GOVERNING AUTHORITY.

SHEET NOTES

1. ROOFTOP EXHAUST FAN. SEE DETAIL G/M-3.1
2. TYPICAL ROOF DUCT SUPPORT . SEE DETAIL A/M-3.2
3. CONDENSING UNIT ON ROOF . SEE DETAIL C/M-3.1
4. PACKAGE ROOFTOP HEAT PUMP SEE DETAIL B/M-3.1
5. GRAVITY INTAKE SEE DETAIL E/M-3.2

WALL LEGENDS

NOTES:
S.S.D. SITE SPECIFC

WOOD FRAMING- 1 HR FIRE RATED WALL

WOOD FRAMING - NON RATED, INSULATED

KEY PLAN

IDENTIFICATION STAMP
DIV. OF THE STATE ARCHITECT
APP: 01-119994 INC:
REVIEWED FOR
SS ☑ FLS ☑ ACS ☑
DATE: 08/16/2022

QUATTROCCHI KWOK ARCHITECTS

Main Office:
636 Fifth Street, Santa Rosa, CA 95404
Pleasanton Office:
600 Main Street, Suite E,
Pleasanton, CA 94566
(707) 576-0829

COSTA ENGINEERS INC.
317 11th Ave San Diego, CA 92101 p: 619.234.8777 fax: 619.234.8873

REGISTERED PROFESSIONAL ENGINEER
CHRISTOPHER J. DEL BOSKE
No. 30000
Exp. 12-31-22
MECHANICAL
STATE OF CALIFORNIA

LIBERTY HIGH SCHOOL

NEW CLASSROOM BUILDING

850 2ND STREET
BRENTWOOD, CA
94513

LIBERTY UNION HIGH SCHOOL DISTRICT

REVISIONS

DSA APP NO. 01-119994

ARCH PROJECT NO:	1925.00
DRAWN BY:	Author
DRAWING SCALE:	1/8" = 1'-0"
PTN: 61721-83	FILE NO: 7-H4

CONSTRUCTION DOCUMENTS

JUNE 24, 2022

SHEET TITLE

BLDG B - ROOF MECHANICAL PLAN

SHEET NUMBER

M-B2.2

7/26/2022 4:23:42 PM

C:\Users\bmungandi\OneDrive - Costa Engineers\Documents\21039 Liberty HS Classroom Bldg RVT20_bMungandi.rvt

PLUMBING LOCAL CONNECTION SCHEDULE

MARK	W	V	CW	HW	FLOW RATE	FLUSH VOLUME	MANUFACTURER & MODEL #	DESCRIPTION
P-1	4"	2"	1 1/2"		-	1.28 GPF	AMERICAN STANDARD #3351.101	WALL MOUNTED WATER CLOSET
P-1A	4"	2"	1 1/2"		-	1.28 GPF	AMERICAN STANDARD #3351.101	WALL MOUNTED WATER CLOSET (ADA)
P-1B	4"	2"	1 1/2"		-	-	AMERICAN STANDARD #3043.001	FLOOR MOUNTED WATER CLOSET ADA
P-2	2"	1 1/2"	3/4"	0"	0.5 GPM	-	AMERICAN STANDARD #0355.012	WALL MOUNTED LAVATORY (SAD FOR MOUNTING HEIGHT)
P-2A	2"	1 1/2"	3/4"	0"	0.5 GPM	-	AMERICAN STANDARD #0355.012	WALL MOUNTED LAVATORY (SAD FOR MOUNTING HEIGHT)ADA DCW ONLY
P-2B	2"	1 1/2"	3/4"	3/4"	0.5 GPM	-	AMERICAN STANDARD #0355.012	WALL MOUNTED LAVATORY (SAD FOR MOUNTING HEIGHT)ADA DCW/DHW
P-2C	2"	1 1/2"	3/4"	3/4"	0.5 GPM	-	AMERICAN STANDARD #0355.012	WALL MOUNTED LAVATORY (SAD FOR MOUNTING HEIGHT)ADA DCW/DHW
P-3	2"	1 1/2"	1"		-	0.125 GPF	AMERICAN STANDARD #6590.001	WALL MOUNTED URINAL
P-3A	2"	1 1/2"	1"		-	0.125 GPF	AMERICAN STANDARD #6590.001	WALL MOUNTED URINAL (ADA; SAD FOR MOUNTING HEIGHT)
P-4	2"	2"	3/4"	3/4"	-	-	FLORESTONE MODEL 91	FLOOR MOUNTED JANITOR SINK
P-5A	2"	1 1/2"	3/4"	0"	-	-	INTEGRAL TO COUNTER	SINGLE FAUCET W/ 1 QUART ORION BT-1 BOTTLE TRAP (INTEGRAL SINK SAD)
P-5B	2"	1 1/2"	3/4"	0"	-	-	INTEGRAL TO COUNTER	SINGLE FAUCET W/ 1 QUART ORION BT-1 BOTTLE TRAP ADA ACCESSIBLE (INTEGRAL SINK SAD)
P-5C	2"	1 1/2"	3/4"	3/4"	-	-	INTEGRAL TO COUNTER	TEACHER FAUCET W/ 1 QUART ORION BT-1 BOTTLE TRAP ADA ACCESSIBLE HW/CW (INTEGRAL SINK SAD)
P-5D	2"	1 1/2"	3/4"	3/4"	1.5 GPM		WEST STAR INDUSTRIES CUSTOM	DOUBLE UTILITY SINK W/ 1 QUART ORION BT-1 BOTTLE TRAP ADA ACCESSIBLE HW/CW
P-5E	2"	1 1/2"	3/4"	3/4"	-	-	JUST #DL-ADA-1933-A-GR	COUNTER MOUNTED DOUBLE COMPARMENT SINK (ADA) HW/CW
P-6	2"	1 1/2"	3/4"	0"	-	-	ELKAY "EZH20"	HI-LOW DRINKING FOUNTAIN W/ BOTTLE FILLER
P-8	2"	1 1/2"	1 1/4"		-	-	GUARDIAN GBF1994	COMBINATION EMERGENCY SHOWER/ EYE WASH (ADA)
GT-1							CHICAGO FAUCETS 982-VR909CAGCP	DOUBLE GAS TURRET
RD					-	-	JAY R SMITH, FIGURE 1850Y-CID	ROOF DRAIN SEE PLAN FOR PIPE SIZES
HB-1			3/4"		-	-	CHICAGO NO. 387-E27CP	INTERIOR HOSE BIBB
HB-2			3/4"		-	-	WOODFORD MODEL 24	EXTERIOR HOSE BIBB
HB-3			3/4"		-	-	WOODFORD MODEL RHY-1-MS	ROOF HOSE BIBB
FD-1	3"	1 1/2"	1/2"		-	-	Watts FD-100-M	FLOOR DRAIN WITH TRAP PRIMMER
CR-1	2"						JAY R. SMITH FIGURE #3960	CONDENSATE RECEIVER

REMARKS:
1. CW FIXTURES AND VALVES SHALL BE AB1953 COMPLIANT.
2. REFER TO ARCHITECTURAL DRAWINGS FOR EXACT LOCATION, HEIGHT, AND NUMBER OF PLUMBING FIXTURES.
3. REFER TO PLUMBING SPECS FOR MODEL AND ASSESORIES.

ELECTRIC WATER HEATER SCHEDULE.

MARK	MANUF.	MODEL	TYPE	TANK CAPACITY	RECOVERY @ 60F° RISE	ELECTRICAL V-HZ	ELECTRICAL No. Elements	ELECTRICAL WATTS	OPER. WEIGHT	LOCATION	REMARKS.
EWH-A207	A.O. SMITH	DEL 20	TANK	20 gal	20	480-1-60	2	3.0 kW	239 lb	CUSTODIAN A207	1-4,6,7
EWH-B101	CHRONOMITE	CM-15L/277	INSTANTANEOUS			277-1-60	1	4.2 kW	5 lb	TEACHER STATION RM B101	5
EWH-B102A	CHRONOMITE	CM-15L/277	INSTANTANEOUS			277-1-60	1	4.2 kW	5 lb	UTILITY SINK RM B102	5
EWH-B102B	CHRONOMITE	CM-15L/277	INSTANTANEOUS			277-1-60	1	4.2 kW	5 lb	UTILITY SINK RM B102	5
EWH-B103	CHRONOMITE	CM-15L/277	INSTANTANEOUS			277-1-60	1	4.2 kW	5 lb	TEACHER STATION RM B103	5
EWH-B106	A.O. SMITH	DEL 10	TANK	10 gal	17	480-1-60	2	3.0 kW	140 lb	CUSTODIAN B106	1-4,8

REMARKS:
1. PROVIDE FACTORY INSTALLED AUTOMATIC TEMPERATURE CONTROL WITH SAFETY CUTOFF TO PREVENT OVERHEATING.
2. PROVIDE WITH ST-12 EXPANSION TANK.
3. PROVIDE WITH HOLDRITE QUICK STAND #30-SWHP-WM WALL MOUNTED MANUFACTURER ENGINEERED EQUIPMENT PLATFORM ASSEMBLY.
4. PROVIDE WITH HOLDRITE QUICK STRAP #QS-U ASSEMBLY
5. INSTALL PER F/P-3.1
6. PROVIDE WITH AQUA-STAT AND CIRCULATION PUMP
7. INSTALL PER A/P-3.1
8. INSTALL PER B/P-3.1

Applicable Code: 2019 CBC 02/05/2020 Revised: 02/14/2020

MEP Componet Anchorage Note

All mechanical, plumbing, and electrical components shall be anchored and installed per the details on the DSA-approved construction documents. The following components shall be anchored or braced to meet the force and displacement requirements prescribed in the 2019 CBC Sections 1617A.1.18 through 1617A.1.26 and ASCE 7-16 Chapters 13, 26, and 30:

1. All permanent equipment and components.
2. Temporary, movable or mobile equipment that is permanently attached (e.g. hard wired) to the building utility services such as electricity, gas or water. "Permanently attached" shall include all electrical connections except plugs for 110/220 volt receptacles having a flexible cable.
3. Temporary, movable or mobile which is heavier than 400 pounds or has a center of mass located 4 feet or more above the adjacent floor or roof level that directly support the component is required to be restrained in a manner approved by DSA.

The following mechanical and electrical components shall be positively attached to the structure but need not demonstrate design compliance with the references noted above. These components shall have flexible connections provided between the component and associated ductwork, piping, and conduit. Flexible connections must allow movement in both trasverse and longitudinal directions:

A. Components weighing less than 400 pounds and having a center of mass located 4 feet or less above the adjacent floor or roof level that directly support the component.

B. Components weighing less than 20 pounds, or in the case of distributed systems, less than 5 pounds per foot, which are suspended from a roof or floor or hung from a wall.

The anchorage of all mechanical, electrical and plumbing components shall be subject to the approval of the design professional in general responsible charge of structural engineer delegated responsibility and acceptance by DSA. The project inspector will verify that all components and equipment have been anchored in accordance with the above requirements.

Piping, Ductwork, and Electrical Distribution System Bracing Note

Piping, ductwork, and electrical distribution systems shall be braced to comply with the forces and displacements prescribed in ASCE 7-16 Section 13.3 as defined in ASCE 7-16 Sections 13.6.5, 13.6.6, 13.6.7, 13.6.8; and 2019 CBC, Sections 1617A.1.24, 1617A.1.25 and 1617A.1.26.

The method of showing bracing and attachments to the structure for the identified distribution system are as noted below. When bracing and attachments are based on a preapproved installation guide (e.g., OSHPD OPM for 2013 CBC or later), copies of the bracing system installation guide or manual shall be available on the jobsite prior to the start of and during the haging and bracing of the distribution systems. The Structural Engineer of Record shall verify the adequacy of the structure to support the hanger and brace loads.

Mechanical Piping (MP), Mechanical Ducts (MD), Plumbing Piping (PP), Electrical Distribution Systems (E):

MP☐ MD☐ PP☐ E☐ Option 1: Detailed on the approved drawings with project specific notes and details

MP☐ MD☐ PP☒ E☐ Option 2: Shall comply with the applicable OSHPD Pre-Approval (OPM #) # OPM 0043-13

APPLICABLE GOVERNING CODES:

2019 CALIFORNIA BUILDING CODE
2019 CALIFORNIA ELECTRICAL CODE
2019 CALIFORNIA MECHANICAL CODE
2019 CALIFORNIA PLUMBING CODE
2019 CALIFORNIA ENERGY CODE
2019 CALIFORNIA FIRE CODE
2019 CALIFORNIA GREEN BUILDING STANDARDS

PLUMBING LEGEND

SYMBOL	ABBREVIATION	DESCRIPTION
X / X		EQUIPMENT TYPE / EQUIPMENT NUMBER
X / X-X		DETAIL / DRAWING NUMBER / SHEET NUMBER
X-XX		FIXTURE TYPE/NUMBER
	(N)	NEW PLUMBING AND PIPING SHOWN HEAVY
	(E)	EXISTING PLUMBING AND PIPING SHOWN LIGHT
	SS	SANITARY WASTE ABOVE GROUND
	SS	SANITARY WASTE BELOW GROUND
	GW	GREASE WASTE BELOW GROUND
	V	VENT PIPE
	DCW	DOMESTIC COLD WATER PIPE
	DHW	DOMESTIC HOT WATER PIPE
	DHWR	HOT WATER RETURN PIPE
CD	CD	CONDENSATE DRAIN
G	G	NATURAL GAS PIPE
RVD	RVD	RELIEF VALVE DISCHARGE
RWL	RWL	RAIN WATER LEADER
OD	OD	OVER FLOW DRAIN PIPE
VAC	VAC	VACUUM LINE
	GV	GATE VALVE
		GLOBE VALVE
	BV	BALL VALVE
	BFV	BUTTERFLY VALVE
	CV	CHECK VALVE
		BALANCING VALVE
		GAS COCK OR STOP
	PRV	PRESSURE REDUCING VALVE
	TV	TEMPERING VALVE
		STRAINER
		UNION
		PRESSURE GAUGE AND COCK
	P	PUMP
		THERMOMETER
	CO	CLEANOUT
	WCO	WALL CLEANOUT
	FCO	FLOOR CLEANOUT
	COTG	CLEANOUT TO GRADE
		PRESSURE GUAGE WELL ONLY (PETE'S PLUG)
	HB	HOSE BIBB
		PIPE UP
		PIPE DOWN
		BRANCH TOP CONNECTION
		BRANCH BOTTOM CONNECTION
		BRANCH SIDE CONNECTION
		CAP ON END OF PIPE
		CONCENTRIC REDUCER
		ECCENTRIC REDUCER
		VALVE IN RISER
		POINT OF CONNECTION
		POINT OF DEMOLITION
℄		CENTER LINE
	AFF	ABOVE FINISHED FLOOR
	AFG	ABOVE FINISHED GRADE
	AFC	ABOVE FINISHED CEILING
	AP	ACCESS PANEL
	BF	BELOW FLOOR
	CI	CAST IRON
	COTG	CLEANOUT TO GRADE
	DMV	DRAIN, WASTE, AND VENT
	DN	DOWN
	DW	DISHWASHER
	DWG	DRAWING
	(E)	EXISTING
	FCO	FLOOR CLEANOUT
	IE	INVERT ELEVATION
	IW	IN WALL
	IFC	IN FURRED CEILING
	MFR	MANUFACTURER
	(N)	NEW
	NIC	NOT IN CONTRACT
	NTS	NOT TO SCALE
	SA	SHOCK ABSORBER
	SAD	SEE ARCHITECTURAL DRAWINGS
	SCD	SEE CIVIL DRAWINGS
	SED	SEE ELECTRICAL DRAWINGS
	SMD	SEE MECHANICAL DRAWINGS
	SSD	SEE STRUCTURAL DRAWINGS
	TYP	TYPICAL
	UMC	UNIFORM MECHANICAL CODE
	UPC	UNIFORM PLUMBING CODE
	UNO	UNLESS NOTED OTHERWISE
	V	VENT
	VTR	VENT THROUGH ROOF
	WCO	WALL CLEANOUT
	WA	WATER HAMMER ARRESTOR

BLDG 'PLUMBING' SHEET LIST

P-1.1	PLUMBING SCHEDULES & LEGENDS
P-A2.1	BLDG A PLUMBING FIRST FLOOR WASTE AND VENT PLAN
P-A2.2	BLDG A PLUMBING FIRST FLOOR WATER AND GAS PLAN
P-A2.3	BLDG A PLUMBING SECOND FLOOR WASTE AND VENT PLAN
P-A2.4	BLDG A PLUMBING SECOND FLOOR WATER AND GAS PLAN
P-A2.5	BLDG A PLUMBING ROOF PLAN
P-A2.6	BLDG A PLUMBING ENLARGEMENTS
P-A2.7	BLDG A PLUMBING ENLARGEMENTS
P-B2.1	BLDG B PLUMBING ENLARGEMENTS
P-B2.2	BLDG B PLUMBING ENLARGEMENTS
P-B2.3	BLDG B PLUMBING ROOF PLAN
P-3.1	PLUMBING DETAILS
P-3.2	PLUMBING DETAILS
P-3.3	PLUMBING DETAILS

IDENTIFICATION STAMP
DIV. OF THE STATE ARCHITECT
APP: 01-119994 INC:
REVIEWED FOR
SS ☑ FLS ☑ ACS ☑
DATE: 08/16/2022

QUATTROCCHI KWOK ARCHITECTS
Main Office:
636 Fifth Street, Santa Rosa, CA 95404
Pleasanton Office:
600 Main Street, Suite E,
Pleasanton, CA 94566
(707) 576-0829

COSTA ENGINEERS INC.
3274 Villa Lane Napa, CA 94558 ph: 707-252-9177 fax: 707-252-6473

REGISTERED PROFESSIONAL ENGINEER
CHRISTOPHER J. DEL CORE
No. 34600
Exp. 12-31-22
MECHANICAL
STATE OF CALIFORNIA

LIBERTY HIGH SCHOOL

NEW CLASSROOM BUILDING

850 2ND STREET
BRENTWOOD, CA
94513

LIBERTY UNION HIGH SCHOOL DISTRICT

REVISIONS

DSA APP NO. 01-119994

ARCH PROJECT NO: 1925.00
DRAWN BY: MQ
DRAWING SCALE:
PTN: 61721-83 FILE NO: 7-H4

CONSTRUCTION DOCUMENTS
JUNE 24, 2022

SHEET TITLE

PLUMBING SCHEDULES & LEGENDS

SHEET NUMBER

P-1.1

C:\Users\bmungandi\OneDrive - Costa Engineers\Documents\21038 Liberty HS Classroom Bldg RVT20_bMungandi.rvt 7/26/2022 4:23:42 PM

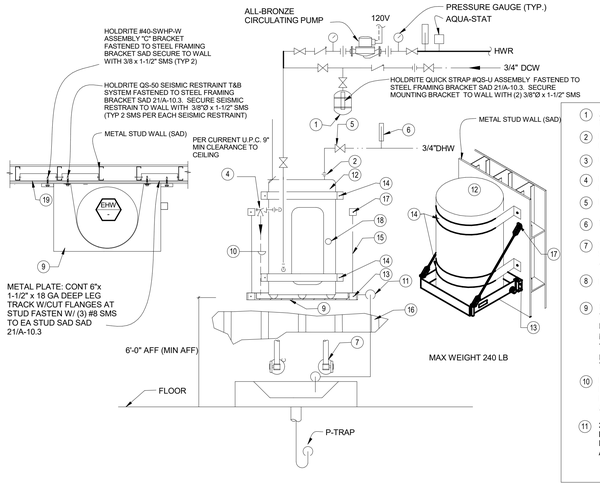

1. AMTROL ST-12 EXPANSION TANK
2. DIELECTRIC UNION (TYPICAL)
3. UNION (TYP.)
4. PRESSURE TEMPERATURE RELIEF VALVE
5. BALL VALVE (TYPICAL)
6. THERMOMETER (TYP)
7. 3/4"DCW/DHW WATER SUPPLY THRU WALL TO JANITORIAL SINK
8. NOT USED
9. HOLDRITE QUICK STAND #30-SWHP-WM WALL MOUNTED EQUIPMENT PLATFORM ASSEMBLY, MANUFACTURER ENGINEERED TO SUPPORT UP TO 20 US GALLONS OR EQUIPMENT UP TO 300 POUNDS TOTAL WEIGHT
10. FULL SIZE T & PRV DRAIN CONT. DN TO DRAIN INDIRECTLY INTO PAN WATER HEATER SUPPORT ASSEMBLY
11. 3/4" CD DRAIN FROM DRAIN PAN. TO DRAIN INDIRECTLY INTO SERVICE SINK MIN. 1" AIR GAP.
12. STORAGE-TYPE, ELECTRIC WATER HEATER. DISTANCE FROM WALL TO WATER HEATER PER CURRENT U.P.C. 9" MIN CLEARANCE TO CEILING
13. HOLDRITE #40-SWHP-W ASSEMBLY "C" BRACKET FASTENED TO STEEL FRAMING BRACKET SAD SECURE TO WALL WITH (2) 3/8"Ø x 1-1/2" SMS
14. HOLDRITE QS-50 SEISMIC RESTRAINT T&B SYSTEM FASTENED TO STEEL FRAMING BRACKET SAD 21/A-10.3. SECURE SEISMIC RESTRAIN TO WALL WITH 3/8"Ø x 1-1/2" SMS (TYP 2 SMS PER EACH SEISMIC RESTRAINT)
15. THREADED ROD (2): LOW CARBON STEEL, ZINC PLATED, 3/8" X29-3/4" LONG BY MANUFACTURER.
16. METAL STUD BEHIND GYP-BD WALL @16" O.C SSD
17. HOLDRITE #40-SWHP-W ASSEMBLY "45 DEGREE" BRACKET FASTENED TO STEEL FRAMING BRACKET SAD SECURE TO WALL WITH 3/8"Ø x 1-1/2" SMS (TYP 2)
18. ELECTRICAL CONNECTION
19. STEEL FRAMING BRACKET SAD 21/A-10.3

A WATER HEATER MOUNTING DETAIL & PIPING DIAGRAM BLDG A (METAL STUD WALL)

SCALE: NONE

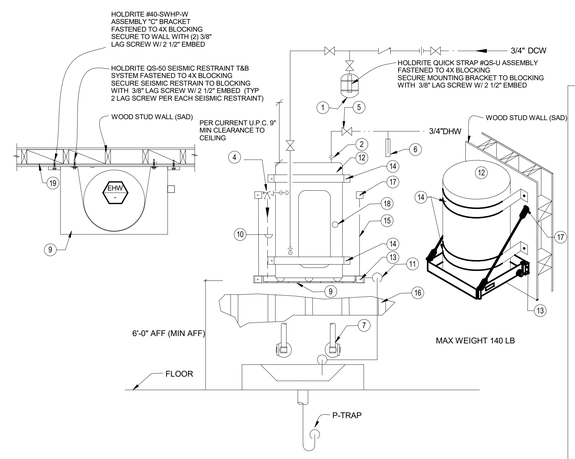

1. AMTROL ST-12 EXPANSION TANK
2. DIELECTRIC UNION (TYPICAL)
3. UNION (TYP.)
4. PRESSURE TEMPERATURE RELIEF VALVE
5. GATE VALVE (TYPICAL)
6. THERMOMETER (TYP)
7. 3/4"DCW/DHW WATER SUPPLY THRU WALL TO JANITORIAL SINK
8. NOT USED
9. HOLDRITE QUICK STAND #30-SWHP-WM WALL MOUNTED EQUIPMENT PLATFORM ASSEMBLY, MANUFACTURER ENGINEERED TO SUPPORT UP TO 20 US GALLONS OR EQUIPMENT UP TO 300 POUNDS TOTAL WEIGHT
10. FULL SIZE T & PRV DRAIN CONT. DN TO DRAIN INDIRECTLY INTO PAN WATER HEATER SUPPORT ASSEMBLY
11. 3/4" CD DRAIN FROM DRAIN PAN. TO DRAIN INDIRECTLY INTO SERVICE SINK MIN. 1" AIR GAP.
12. STORAGE-TYPE, ELECTRIC WATER HEATER. DISTANCE FROM WALL TO WATER HEATER PER CURRENT U.P.C. 9" MIN CLEARANCE TO CEILING
13. HOLDRITE #40-SWHP-W ASSEMBLY "C" BRACKET FASTENED TO 4X BLOCKING SECURE TO WALL WITH (2) 3/8" LAG SCREW W/ 2 1/2" EMBED
14. HOLDRITE QS-50 SEISMIC RESTRAINT T&B SYSTEM FASTENED TO 4X BLOCKING SECURE SEISMIC RESTRAIN TO BLOCKING WITH 3/8"Ø LAG SCREW W/ 2 1/2" EMBED (TYP 2 LAG SCREW PER EACH SEISMIC RESTRAINT)
15. THREADED ROD (2): LOW CARBON STEEL, ZINC PLATED, 3/8" X29-3/4" LONG BY MANUFACTURER.
16. WOOD STUD BEHIND GYP-BD WALL @16" O.C (TYP)
17. HOLDRITE #40-SWHP-W ASSEMBLY "45 DEGREE" BRACKET FASTENED TO 4X BLCOKING SECURE TO WALL WITH 3/8" LAG SCREW W/ 2 1/2" EMBED (TYP 2)
18. ELECTRICAL CONNECTION
19. 4x BLOCKING (AS REQUIRED) WITH A34 EACH END, EACH SIDE (TYPICAL)

B EWH MOUNTING DETAIL & PIPING DIAGRAM @ BLG B (WOOD STUD WALL)

SCALE: NONE

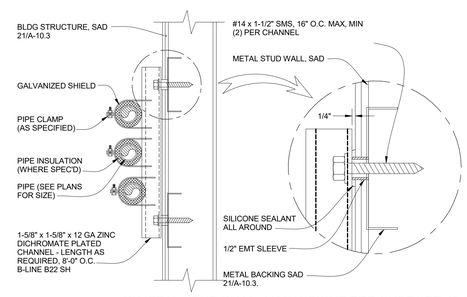

@ METAL STUD WALL, MAX WEIGHT PER SUPPORT 48#'s

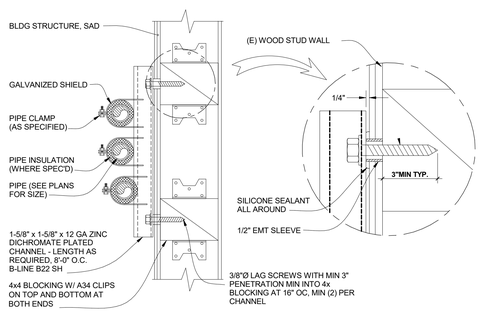

@ WOOD STUD WALL, MAX WEIGHT PER SUPPORT 48#'s

C CHANNEL SUPPORT DETAIL

SCALE: NONE

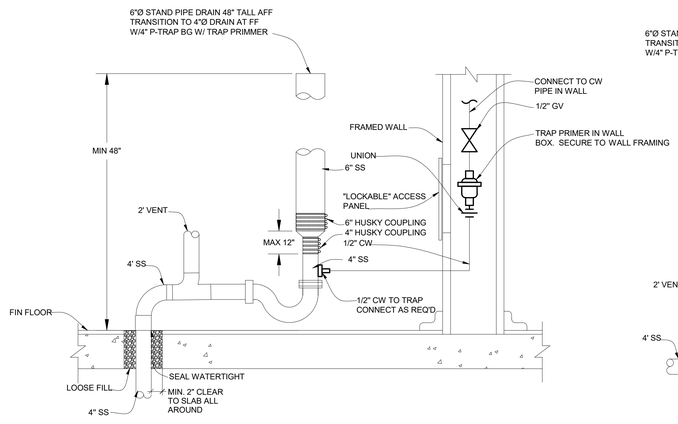

D FIRE STAND DRAIN BLDG A

SCALE: NONE

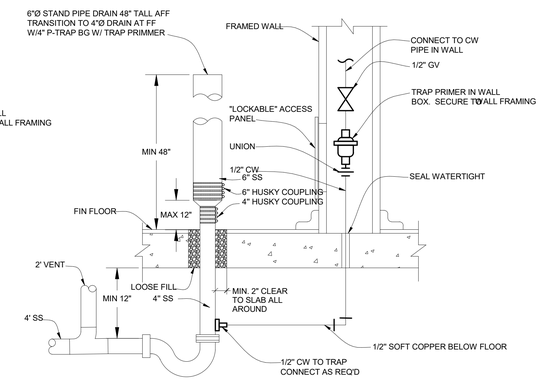

E FIRE STAND DRAIN BLDG B

SCALE: NONE

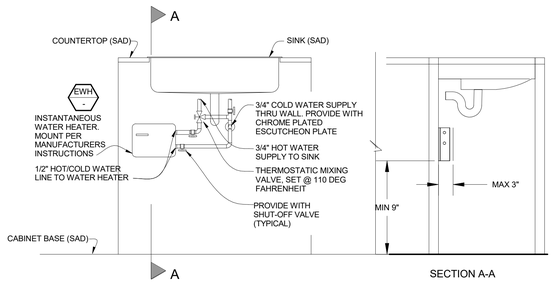

F POINT-OF-USE WATER HEATER DETAIL

SCALE: NONE

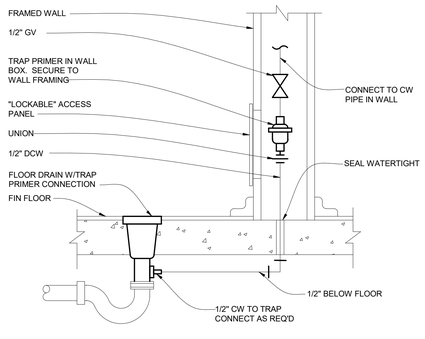

G TRAP PRIMER TO DRAIN

SCALE: NONE

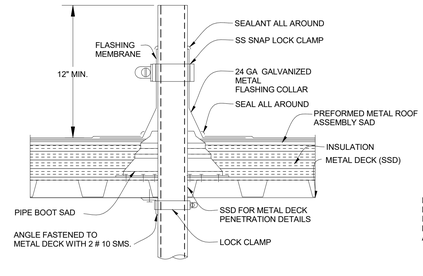

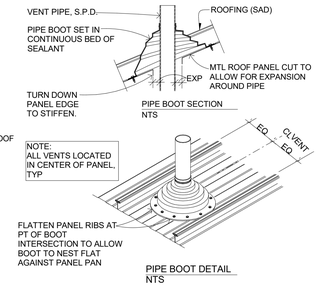

H VENT ROOF DETAIL

SCALE: NONE

IDENTIFICATION STAMP
DIV. OF THE STATE ARCHITECT
APP: 01-119994 INC:
REVIEWED FOR
SS ☑ FLS ☑ ACS ☑
DATE: 08/16/2022

QUATTROCCHI KWOK ARCHITECTS
Main Office:
636 Fifth Street, Santa Rosa, CA 95404
Pleasanton Office:
600 Main Street, Suite E,
Pleasanton, CA 94566
(707) 576-0829

COSTA ENGINEERS INC.

REGISTERED PROFESSIONAL ENGINEER
CHRISTOPHER J. DEL BORGO
No. 30000
Exp. 12-31-22
MECHANICAL
STATE OF CALIFORNIA

LIBERTY HIGH SCHOOL

NEW CLASSROOM BUILDING

850 2ND STREET
BRENTWOOD, CA
94513

LIBERTY UNION HIGH SCHOOL DISTRICT

REVISIONS

DSA APP NO. 01-119994

ARCH PROJECT NO: 1925.00
DRAWN BY: Author
DRAWING SCALE:
PTN: 61721-83 FILE NO: 7-H4

CONSTRUCTION DOCUMENTS

JUNE 24, 2022

SHEET TITLE

PLUMBING DETAILS

SHEET NUMBER

P-3.1

7/26/2022 4:23:42 PM

C:\Users\bmungandi\OneDrive - Costa Engineers\Documents\21038 Liberty HS Classroom Bldg RVT20_bMungandi.rvt

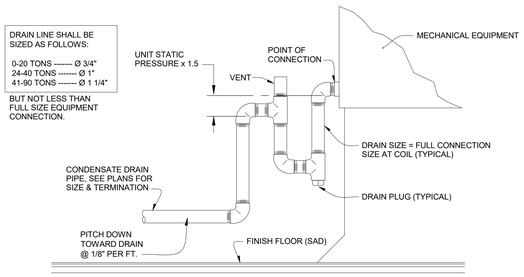

A TYPICAL CONDENSATE DRAIN ON ROOF DETAIL

SCALE: NONE

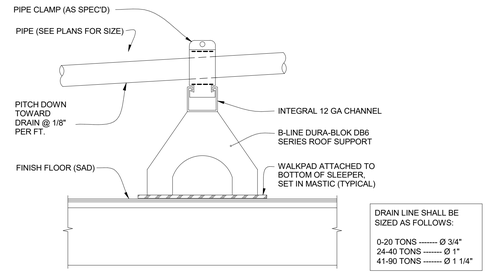

NOTES:
1. SUPPORTS SHALL BE AT 8'-0" ON CENTER & AT ALL CHANGE OF DIRECTION.
2. DO NOT USE FOR SUPPORT OF ANY GAS PIPING. THIS DETAIL IS FOR NON-GAS PIPE APPLICATION ONLY.

B CONDENSATE SUPPORT ON ROOF DETAIL

SCALE: NONE

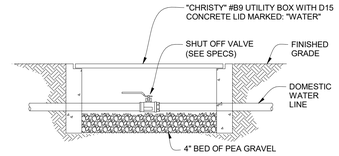

C DOMESTIC WATER SHUT-OFF

SCALE: NONE

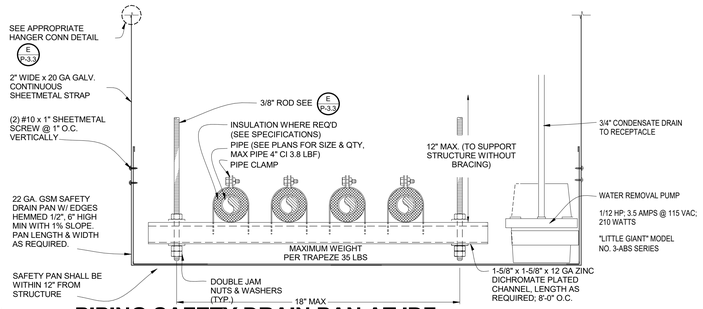

D PIPING SAFETY DRAIN PAN AT IDF

SCALE: NONE

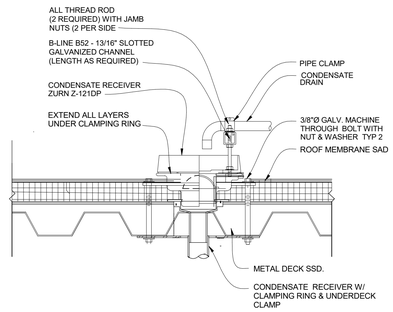

E CD TO CONDENSATE RECEIVER

SCALE: NONE

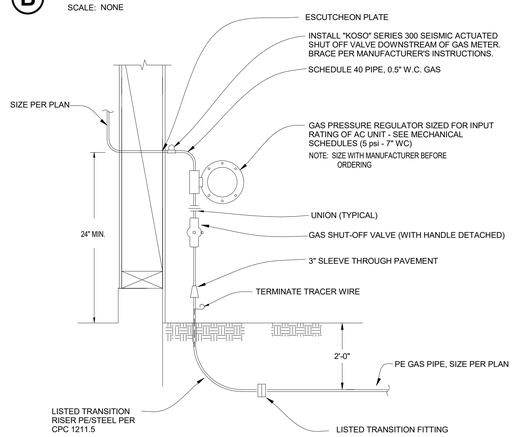

F GAS ENTRANCE WITH REGULATOR

SCALE: NONE

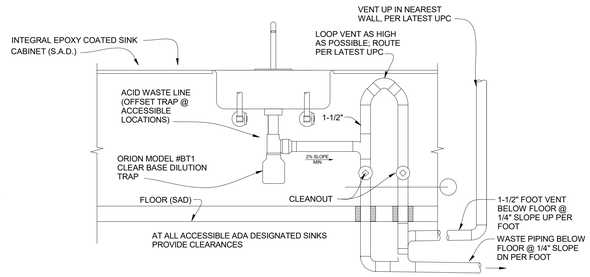

G ISLAND VENT DETAIL

SCALE: NONE

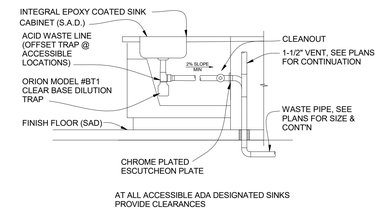

H ACID P-TRAP

SCALE: NONE

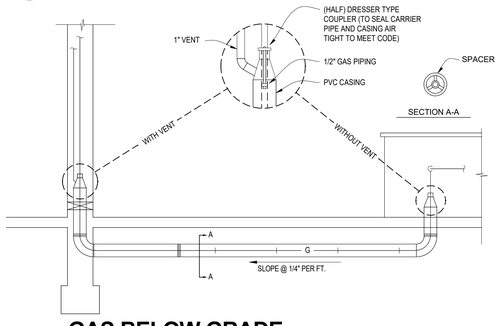

J GAS BELOW GRADE

SCALE: NONE

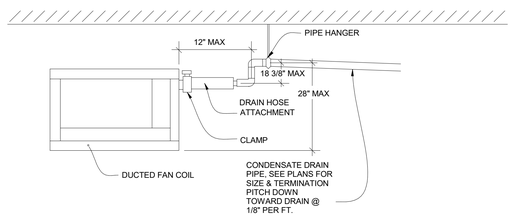

K TYPICAL CONDENSATE DRAIN FOR DUCTED FAN COIL

SCALE: NONE

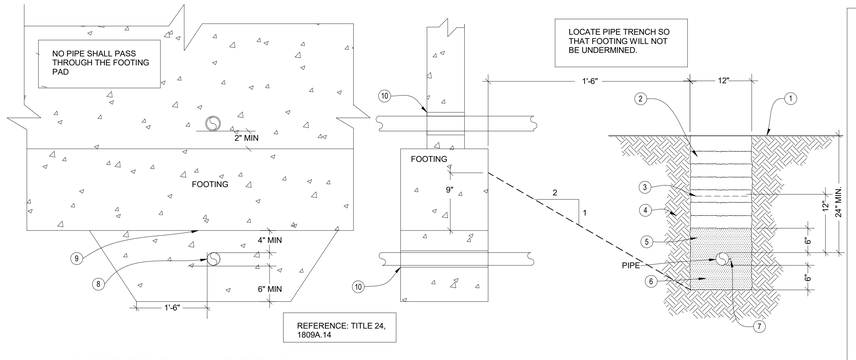

1. REPAIR ASPHALT PAVING OR CONCRETE TO MATCH EXISTING
2. BACK FILL IN 6" LAYERS, EACH LAYER TAMPED TO 95% MAX. DRY DENSITY PER ASTM D-1557-64T
3. WARNING TAP, 6" WIDE MINIMUM
4. UNDISTURBED EARTH
5. CLEAN SAND 6" ABOVE & BELOW PIPE
6. 6" CLEAR ALL AROUND
7. #12 SOLID COPPER TRACER WIRE ALONG ALL NONMETALLIC PIPING. ATTACH TO PIPE W/ "TY-WRAP" @ "TY-WRAP 8'-0" O.C.
8. PLACE CONCRETE FILL AROUND SLEEVES BEFORE POURING FOOTING PADS. FILL SHALL BE SAME WIDTH AS FOOTING AND FULL PLACE CONCRETE FILL.
9. POUR JOINT
10. PROVIDE METAL SLEEVES WITH I.D. 2"GREATER THAN THE O.D. OF THE PIPE.

L PIPE TRENCH DETAIL

SCALE: NONE

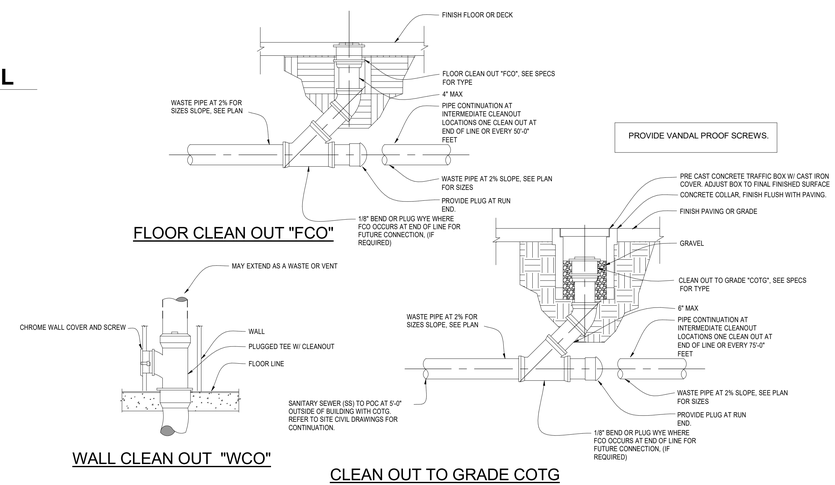

M TYPES OF CLEANOUTS DETAIL

SCALE: NONE

IDENTIFICATION STAMP
DIV. OF THE STATE ARCHITECT
APP: 01-119994 INC:
REVIEWED FOR
SS ☑ FLS ☑ ACS ☑
DATE: 08/16/2022

QUATTROCCHI KWOK ARCHITECTS

Main Office:
636 Fifth Street, Santa Rosa, CA 95404
Pleasanton Office:
600 Main Street, Suite E,
Pleasanton, CA 94566
(707) 576-0829

COSTA ENGINEERS INC.
317 N 5th Ave Tempe, CA 85281 P: "01-(619)" 1 Mar "01-(520)" 3

REGISTERED PROFESSIONAL ENGINEER
CHRISTOPHER J. DEL SORBO
No. 30000
Exp. 12-31-22
MECHANICAL
STATE OF CALIFORNIA

LIBERTY HIGH SCHOOL

NEW CLASSROOM BUILDING

850 2ND STREET
BRENTWOOD, CA
94513

LIBERTY UNION HIGH SCHOOL DISTRICT

REVISIONS

DSA APP NO. 01-119994

ARCH PROJECT NO: 1925.00
DRAWN BY: Author
DRAWING SCALE:
PTN: 61721-83 FILE NO: 7-H4

CONSTRUCTION DOCUMENTS

JUNE 24, 2022

SHEET TITLE

PLUMBING DETAILS

SHEET NUMBER

P-3.2

7/26/2022 4:23:43 PM

C:\Users\bmungandi\OneDrive - Costa Engineers\Documents\31038 Liberty HS Classroom Bldg RVT20_bMungandi.rvt

GENERAL NOTES:

1. RUN PIPING AS CLOSE AS POSSIBLE TO STRUCTURE.
2. SUPPORT PIPING AT A MAXIMUM OF 8'-0" INTERVALS AND AT EVERY CHANGE IN DIRECTION.
3. SEE PLANS FOR PIPE SIZES.
4. MASON ROD STIFFENER @ ALL-THREAD WHERE SEISMIC BRACING OCCURS. SEE OPM-0043-13 IN TABLE ABOVE
5. NO BRACING IS REQUIRED WHEN SUPPORTED LESS THAN 12" FROM BOTTOM OF STRUCTURE AND TOTAL WEIGHT IS LESS THAN 50 LBS PER ROD PER 2019 CBC 1617A.1.26 EXCEPTION 2.
6. PIPING SUPPORTED MORE THAN 12" FROM STRUCTURE SHALL BE HAVE ANTI SWAY CABLE BRACING AT EACH SUPPORT

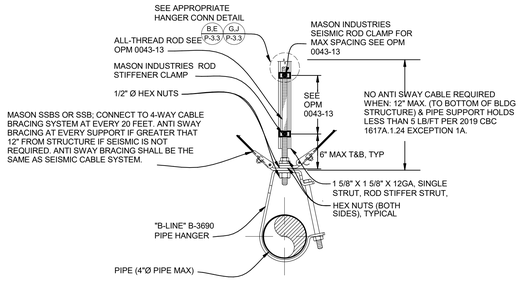

PIPE SUPPORT NOTES:

MINIMUM ROD SIZES (INCHES)	PIPE DIAMETER (INCHES)	MAX SUPPORT SPACING (FEET)
3/8"	2" & SMALLER PIPE	9'-0"
1/2"	2-1/2" & 3" PIPE	6'-0"
5/8"	4" PIPE	6'-0"

SEE OPM 0043-13 PAGES
-C2.11 FOR PIPES 2 INCHES & SMALLER
-C2.30 FOR PIPES 5 INCH TO 3 INCHES

A TYPICAL PIPE HANGER DETAIL

SCALE: NTS

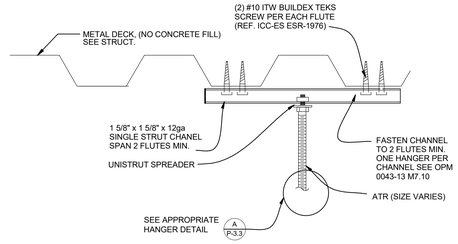

B HANGER TO NON FILLED DECK

SCALE: NTS

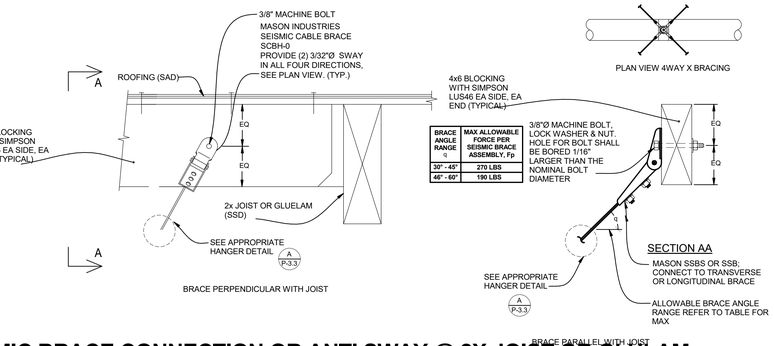

BRACE ANGLE RANGE q	MAX ALLOWABLE FORCE PER SEISMIC BRACE ASSEMBLY, Fp
30° - 45°	270 LBS
46° - 60°	190 LBS

L SEISMIC BRACE CONNECTION OR ANTI SWAY @ 2X JOIST OR GLULAM

SCALE: NONE

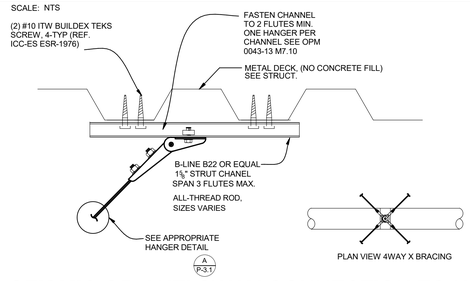

D SEISMIC OR ANTI SWAY CONNECTION TO NON FILLED DECK

SCALE: NTS

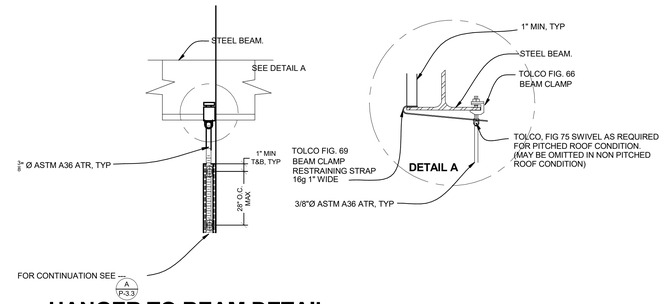

E HANGER TO BEAM DETAIL

SCALE: NTS

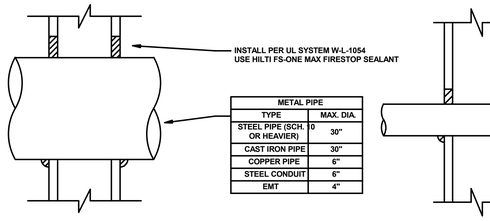

METAL PIPE	
TYPE	MAX. DIA.
STEEL PIPE (SCH. 10 OR HEAVIER)	30"
CAST IRON PIPE	30"
COPPER PIPE	6"
STEEL CONDUIT	6"
EMT	4"

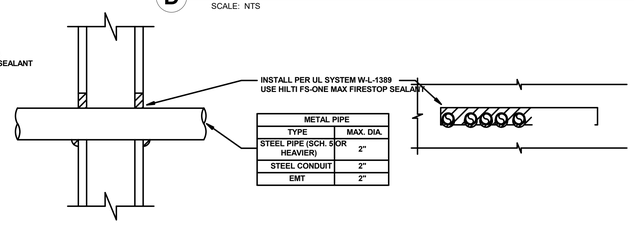

METAL PIPE	
TYPE	MAX. DIA.
STEEL PIPE (SCH. 5 OR HEAVIER)	2"
STEEL CONDUIT	2"
EMT	2"

F PIPE PENETRATION THRU WALL

SCALE: NONE

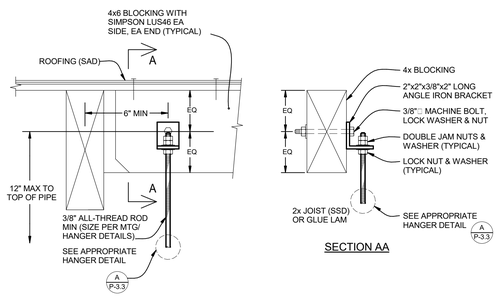

G HANGER CONNECTION @ 2X JOIST OR GLULAM

SCALE: NONE

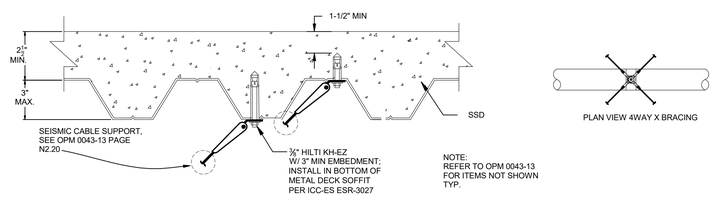

H SEISMIC OR ANTI SWAY HANGER TO DECK W/ CONCRETE FILL

SCALE: NTS

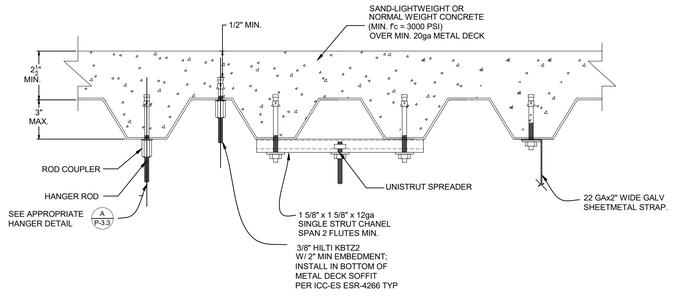

J HANGER TO DECK W/ CONCRETE FILL

SCALE: NTS

IDENTIFICATION STAMP
DIV. OF THE STATE ARCHITECT
APP: 01-119994 INC:
REVIEWED FOR
SS ☑ FLS ☑ ACS ☑
DATE: 08/16/2022

QUATTROCCHI KWOK ARCHITECTS
Main Office:
636 Fifth Street, Santa Rosa, CA 95404
Pleasanton Office:
600 Main Street, Suite E,
Pleasanton, CA 94566
(707) 576-0829

COSTA ENGINEERS INC.

LIBERTY HIGH SCHOOL

NEW CLASSROOM BUILDING

850 2ND STREET
BRENTWOOD, CA
94513

LIBERTY UNION HIGH SCHOOL DISTRICT

REVISIONS

DSA APP NO. 01-119994

ARCH PROJECT NO: 1925.00
DRAWN BY: Author
DRAWING SCALE:
PTN: 61721-83 FILE NO: 7-H4

CONSTRUCTION DOCUMENTS

JUNE 24, 2022

SHEET TITLE

PLUMBING DETAILS

SHEET NUMBER

P-3.3

7/26/2022 4:23:43 PM

C:\Users\bmungandi\OneDrive - Costa Engineers\Documents\21030 Liberty HS Classroom Bldg RVT20_bMungandi.rvt

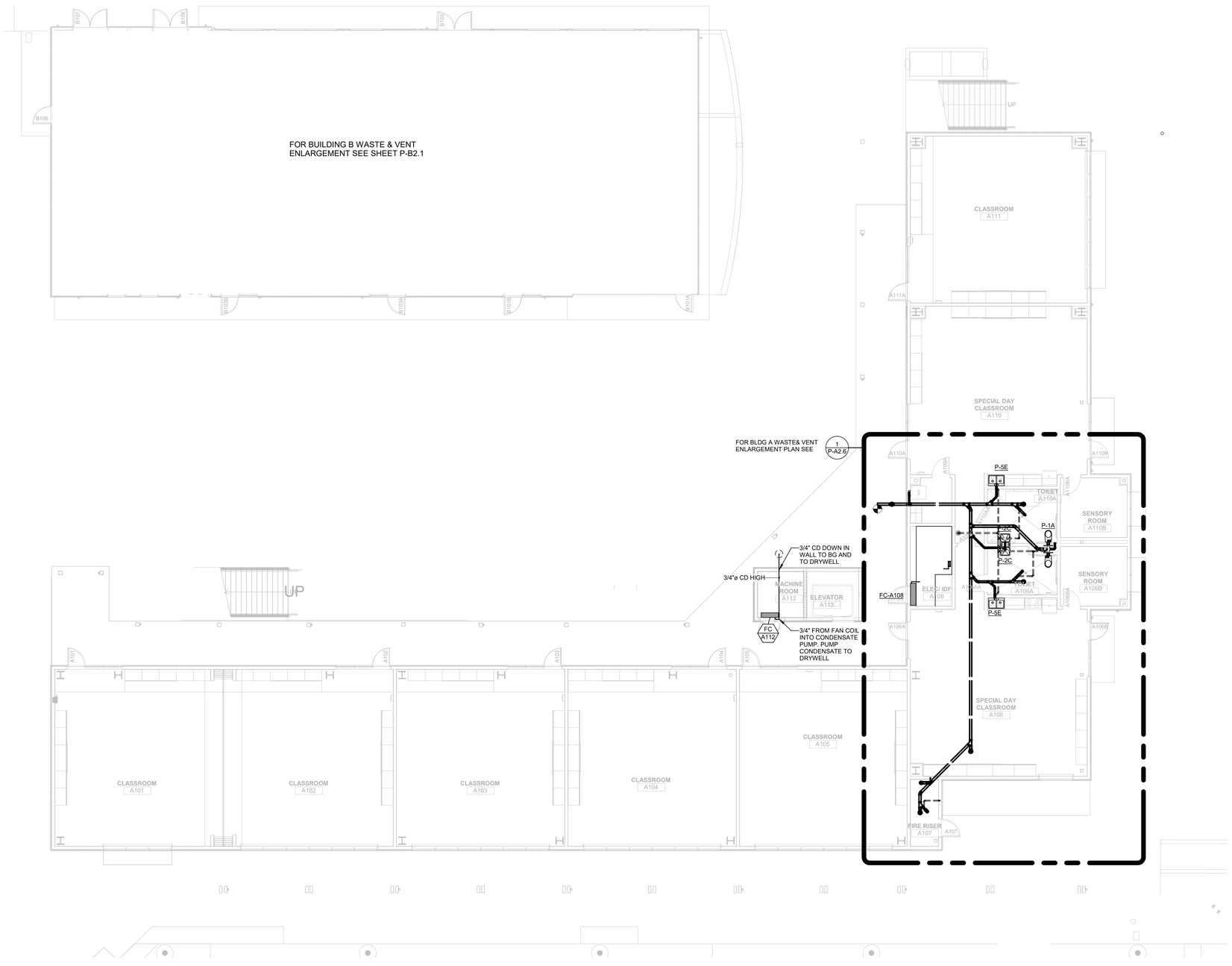

1 **BLDG A PLUMBING FIRST FLOOR WASTE AND VENT PLAN**
1/8" = 1'-0"

GENERAL NOTES

A. FOR PLUMBING GENERAL NOTES, LEGENDS, AND SYMBOLS, REFER TO SHEET P1.1
B. PLUMBING CONTRACTOR SHALL BE RESPONSIBLE FOR COORDINATING THE PLUMBING WORK WITH OTHER TRADES.
C. SEE ARCHITECTURAL DRAWINGS FOR EXACT LOCATION OF PLUMBING FIXTURES.
D. PROVIDE WALL CLEANOUTS FOR SINKS AND URINALS AS REQUIRED.
E. FOR ACCESSIBLE WATER CLOSETS, LOCATE VALVE HANDLE ON THE ACCESSIBLE SIDE PER ACCESSIBLE REQUIREMENTS.
F. ALL UNDERGROUND AND BELOW SLAB PIPINGSHALL BE INSTALLED NO LESS THAN MINIMUM BURY PER CODE. ALL PIPING THROUGH SLAB, BURIED OR UNDERNEATH FOUNDATION SSD
G. REFER TO ARCHITECTURAL GRAPHICS DRAWINGS FOR SIGNAGE NOT SHOW.

WALL LEGENDS

NOTES:
S.S.D. SITE SPECIFC

METAL FRAMING- 1 HR FIRE RATED WALL
METAL FRAMING - NON RATED, INSULATED

KEY PLAN

IDENTIFICATION STAMP
DIV. OF THE STATE ARCHITECT
APP: 01-119994 INC:
REVIEWED FOR
SS ☑ FLS ☑ ACS ☑
DATE: 08/16/2022

QUATTROCCHI KWOK ARCHITECTS
Main Office:
636 Fifth Street, Santa Rosa, CA 95404
Pleasanton Office:
600 Main Street, Suite E,
Pleasanton, CA 94566
(707) 576-0829

COSTA ENGINEERS INC.
317 11th San Diego, CA 92101 P: 619.236.1777 Fax: 619.236.1778

REGISTERED PROFESSIONAL ENGINEER
CHRISTOPHER J. DEL BORGO
No. 30000
Exp. 12-31-22
MECHANICAL
STATE OF CALIFORNIA

LIBERTY HIGH SCHOOL

NEW CLASSROOM BUILDING

850 2ND STREET
BRENTWOOD, CA
94513

LIBERTY UNION HIGH SCHOOL DISTRICT

REVISIONS

DSA APP NO. 01-119994

ARCH PROJECT NO:	1925.00
DRAWN BY:	Author
DRAWING SCALE:	1/8" = 1'-0"
PTN: 61721-83	FILE NO: 7-H4

CONSTRUCTION DOCUMENTS

JUNE 24, 2022

SHEET TITLE
BLDG A PLUMBING FIRST FLOOR WASTE AND VENT PLAN

SHEET NUMBER
P-A2.1

7/26/2022 4:23:46 PM
C:\Users\bmungandi\OneDrive - Costa Engineers\Documents\21038 Liberty HS Classroom Bldg RVT20_bMungandi.rvt

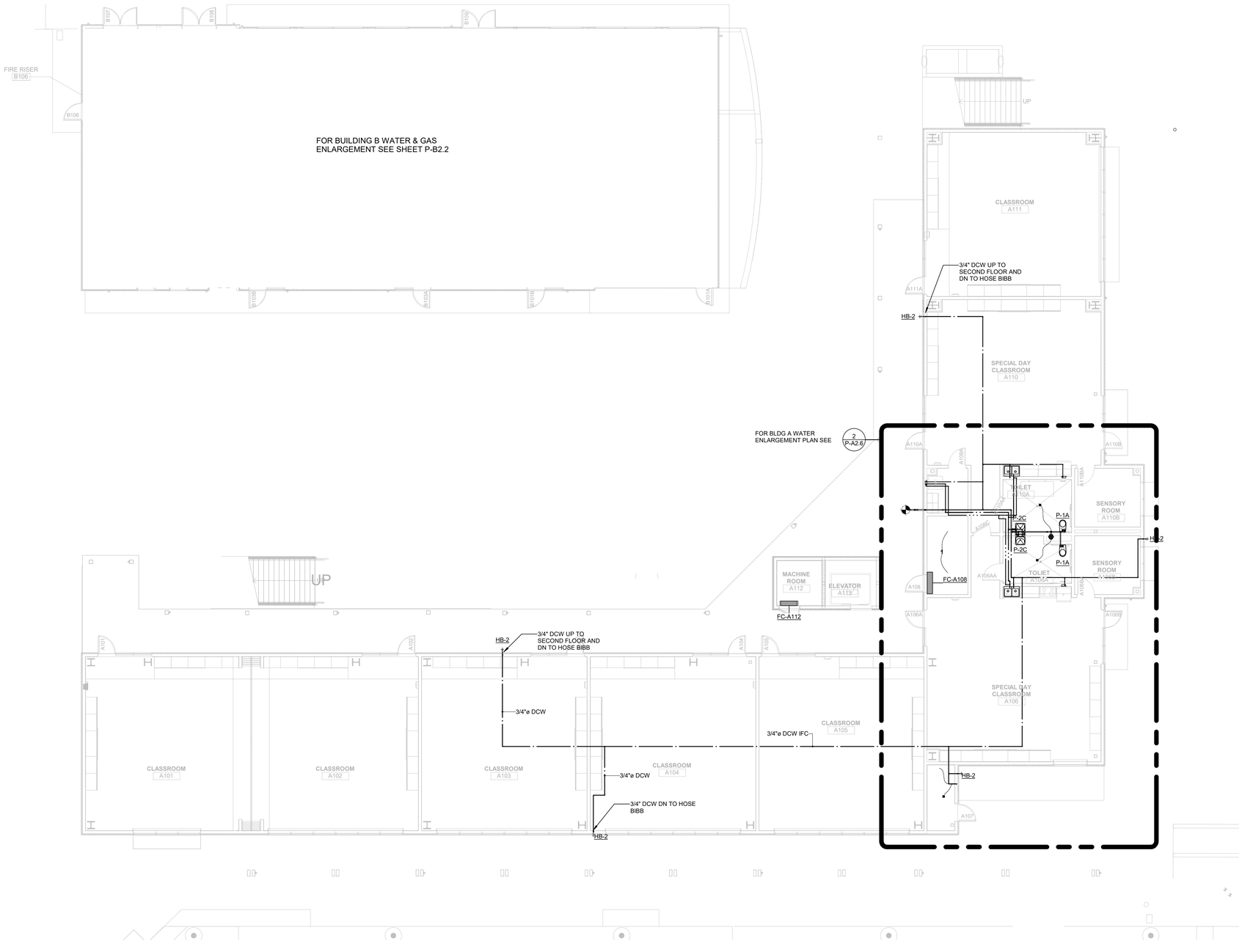

1 BLDG A PLUMBING FIRST FLOOR WATER AND GAS PLAN

1/8" = 1'-0"

GENERAL NOTES

A. FOR PLUMBING GENERAL NOTES, LEGENDS, AND SYMBOLS, REFER TO SHEET P1.1

B. PLUMBING CONTRACTOR SHALL BE RESPONSIBLE FOR COORDINATING THE PLUMBING WORK WITH OTHER TRADES.

C. SEE ARCHITECTURAL DRAWINGS FOR EXACT LOCATION OF PLUMBING FIXTURES.

D. PROVIDE WALL CLEANOUTS FOR SINKS AND URINALS AS REQUIRED.

E. FOR ACCESSIBLE WATER CLOSETS, LOCATE VALVE HANDLE ON THE ACCESSIBLE SIDE PER ACCESSIBLE REQUIREMENTS.

F. ALL UNDERGROUND AND BELOW SLAB PIPINGSHALL BE INSTALLED NO LESS THAN MINIMUM BURY PER CODE. ALL PIPING THROUGH SLAB, BURIED OR UNDERNEATH FOUNDATION SSD

G. REFER TO ARCHITECTURAL GRAPHICS DRAWINGS FOR SIGNAGE NOT SHOW.

WALL LEGENDS

NOTES:
S.S.D. SITE SPECIFC

METAL FRAMING- 1 HR FIRE RATED WALL

METAL FRAMING - NON RATED, INSULATED

KEY PLAN

IDENTIFICATION STAMP
DIV. OF THE STATE ARCHITECT
APP: 01-119994 INC:
REVIEWED FOR
SS ☑ FLS ☑ ACS ☑
DATE: 08/16/2022

QUATTROCCHI KWOK ARCHITECTS

Main Office:
636 Fifth Street, Santa Rosa, CA 95404
Pleasanton Office:
600 Main Street, Suite E,
Pleasanton, CA 94566
(707) 576-0829

COSTA ENGINEERS INC.
317 N 13th Street, Las Vegas, CA 94101 ph: 702.382.8777 fax: 702.382.8873

REGISTERED PROFESSIONAL ENGINEER
CHRISTOPHER J. DEL BORGO
No. 30000
Exp. 12-31-22
MECHANICAL
STATE OF CALIFORNIA

LIBERTY HIGH SCHOOL

NEW CLASSROOM BUILDING

850 2ND STREET
BRENTWOOD, CA
94513

LIBERTY UNION HIGH SCHOOL DISTRICT

REVISIONS

DSA APP NO. 01-119994

ARCH PROJECT NO: 1925.00
DRAWN BY: Author
DRAWING SCALE: 1/8" = 1'-0"
PTN: 61721-83 FILE NO: 7-H4

CONSTRUCTION DOCUMENTS

JUNE 24, 2022

SHEET TITLE
BLDG A PLUMBING FIRST FLOOR WATER AND GAS PLAN

SHEET NUMBER
P-A2.2

7/26/2022 4:23:47 PM

C:\Users\bmungandi\OneDrive - Costa Engineers\Documents\21038 Liberty HS Classroom Bldg RVT20_bMungandi.rvt

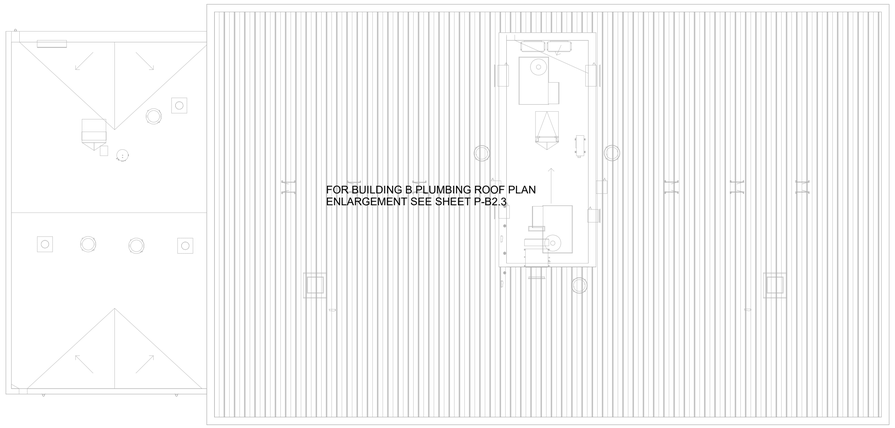

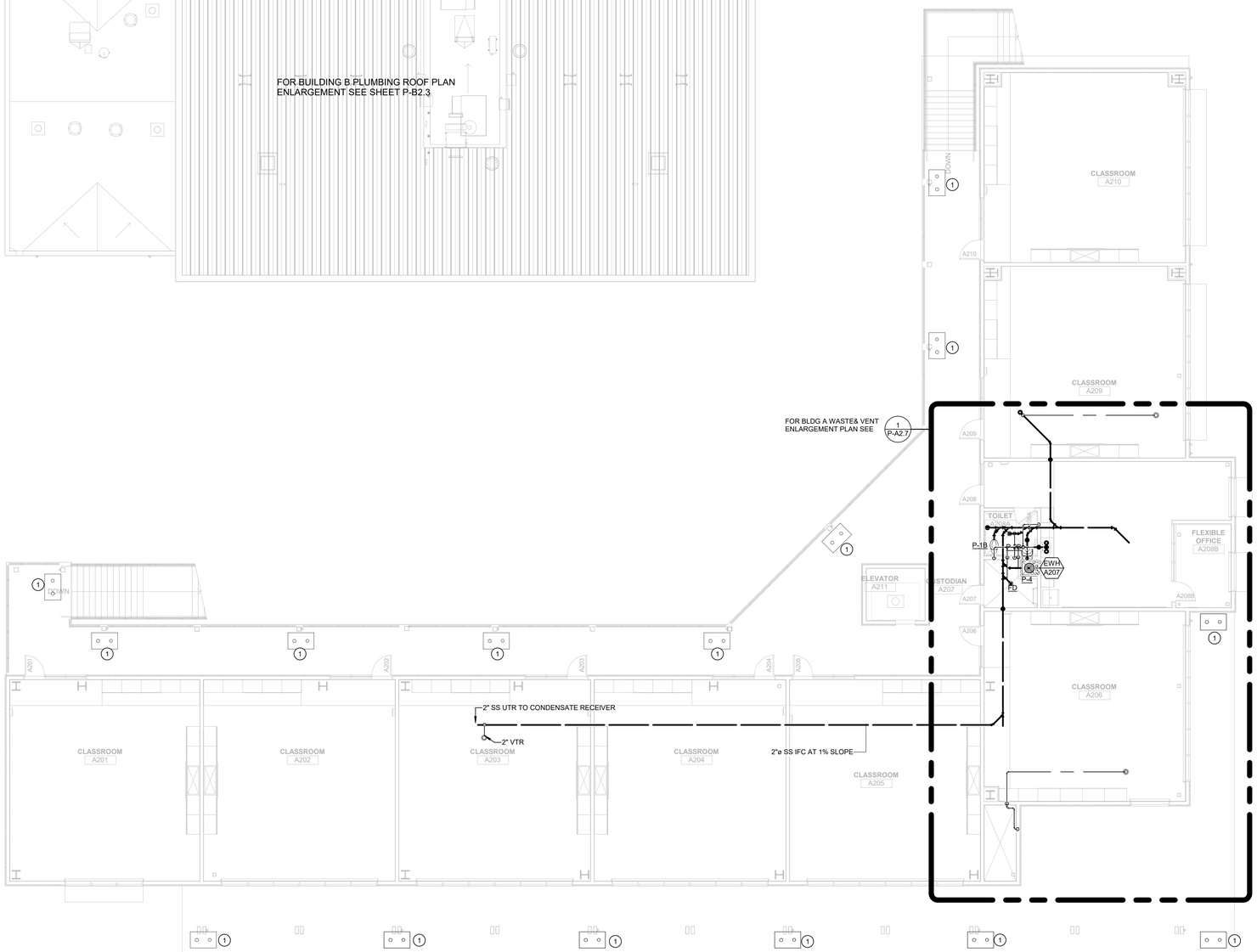

1 BLDG A PLUMBING SECOND FLOOR WASTE AND VENT PLAN

1/8" = 1'-0"

GENERAL NOTES

A. FOR PLUMBING GENERAL NOTES, LEGENDS, AND SYMBOLS, REFER TO SHEET P1.1

B. PLUMBING CONTRACTOR SHALL BE RESPONSIBLE FOR COORDINATING THE PLUMBING WORK WITH OTHER TRADES.

C. SEE ARCHITECTURAL DRAWINGS FOR EXACT LOCATION OF PLUMBING FIXTURES.

D. PROVIDE WALL CLEANOUTS FOR SINKS AND URINALS AS REQUIRED.

E. FOR ACCESSIBLE WATER CLOSETS, LOCATE VALVE HANDLE ON THE ACCESSIBLE SIDE PER ACCESSIBLE REQUIREMENTS.

F. ALL UNDERGROUND AND BELOW SLAB PIPINGSHALL BE INSTALLED NO LESS THAN MINIMUM BURY PER CODE. ALL PIPING THROUGH SLAB, BURIED OR UNDERNEATH FOUNDATION SSD

G. REFER TO ARCHITECTURAL GRAPHICS DRAWINGS FOR SIGNAGE NOT SHOW.

SHEET NOTES

1. ROOF DRAIN ON ROOF CONNECT 3" RWL TO DOWNSPOUT SAD. TERMINATE 3" OD TO DAYLIGHT AT CELINIG EVE

WALL LEGENDS

NOTES:
S.S.D. SITE SPECIFC

METAL FRAMING- 1 HR FIRE RATED WALL

METAL FRAMING - NON RATED, INSULATED

KEY PLAN

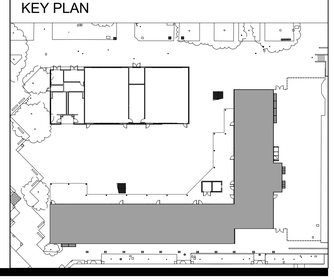

IDENTIFICATION STAMP
DIV. OF THE STATE ARCHITECT
APP: 01-119994 INC:
REVIEWED FOR
SS ☑ FLS ☑ ACS ☑
DATE: 08/16/2022

QUATTROCCHI KWOK ARCHITECTS

Main Office:
636 Fifth Street, Santa Rosa, CA 95404
Pleasanton Office:
600 Main Street, Suite E,
Pleasanton, CA 94566
(707) 576-0829

COSTA ENGINEERS INC.
317 11th Ave San Diego, CA 92101 P: 619.687.1180 FAX: 619.687.1181
REGISTERED PROFESSIONAL ENGINEER
CHRISTOPHER J. DEL GROSSO
No. 30000
Exp. 12-31-22
MECHANICAL
STATE OF CALIFORNIA

LIBERTY HIGH SCHOOL

NEW CLASSROOM BUILDING

850 2ND STREET
BRENTWOOD, CA
94513

LIBERTY UNION HIGH SCHOOL DISTRICT

REVISIONS

DSA APP NO. 01-119994

ARCH PROJECT NO:	1925.00
DRAWN BY:	Author
DRAWING SCALE:	1/8" = 1'-0"
PTN: 61721-83	FILE NO: 7-H4

CONSTRUCTION DOCUMENTS

JUNE 24, 2022

SHEET TITLE **BLDG A PLUMBING SECOND FLOOR WASTE AND VENT PLAN**

SHEET NUMBER **P-A2.3**

7/26/2022 4:23:48 PM
C:\Users\hmungandi\OneDrive - Costa Engineers\Documents\21038 Liberty HS Classroom Bldg RVT20_hMungandi.rvt

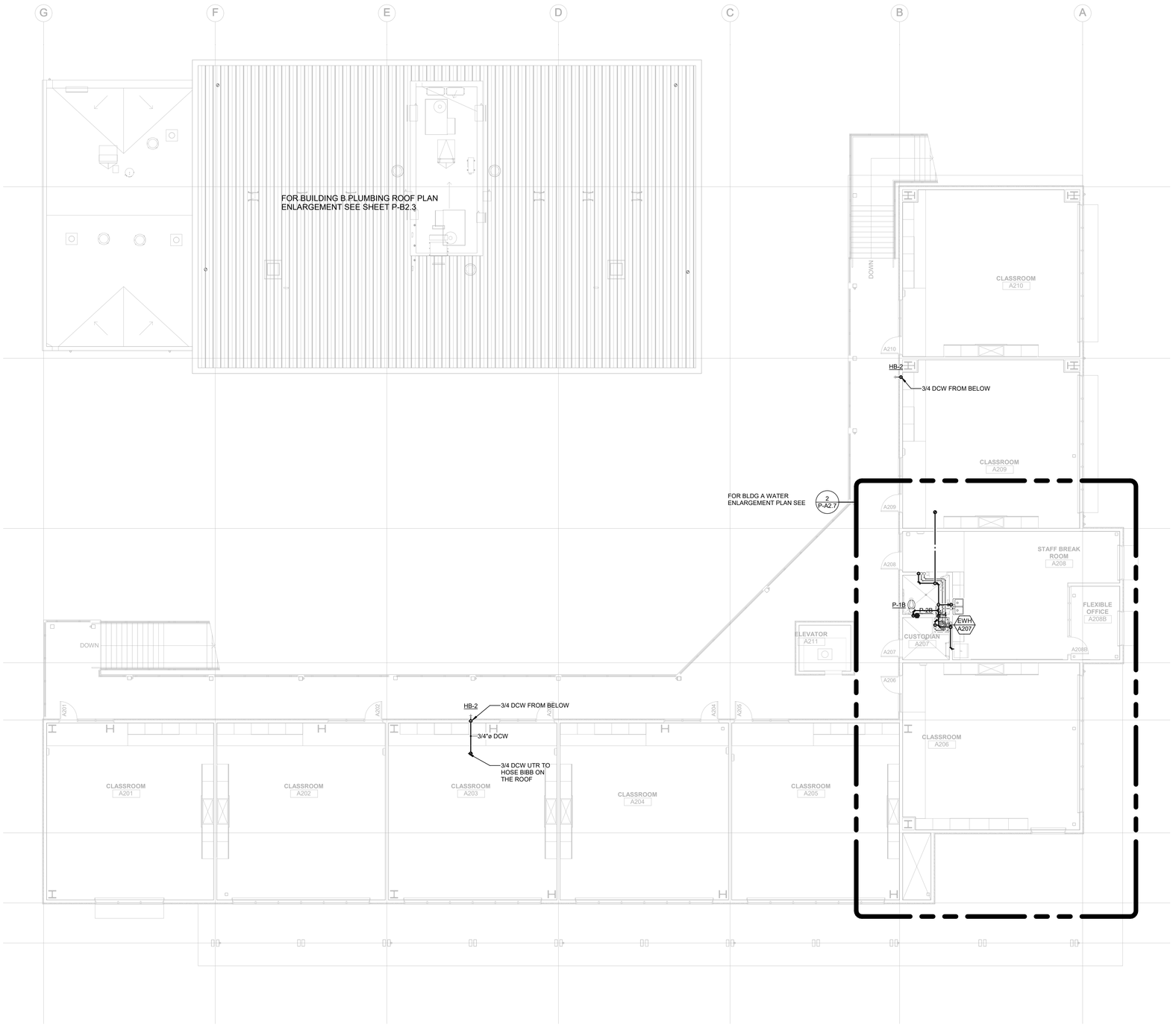

1 **BLDG A PLUMBING SECOND FLOOR WATER AND GAS PLAN**
1/8" = 1'-0"

GENERAL NOTES

A. FOR PLUMBING GENERAL NOTES, LEGENDS, AND SYMBOLS, REFER TO SHEET P1.1
B. PLUMBING CONTRACTOR SHALL BE RESPONSIBLE FOR COORDINATING THE PLUMBING WORK WITH OTHER TRADES.
C. SEE ARCHITECTURAL DRAWINGS FOR EXACT LOCATION OF PLUMBING FIXTURES.
D. PROVIDE WALL CLEANOUTS FOR SINKS AND URINALS AS REQUIRED.
E. FOR ACCESSIBLE WATER CLOSETS, LOCATE VALVE HANDLE ON THE ACCESSIBLE SIDE PER ACCESSIBLE REQUIREMENTS.
F. ALL UNDERGROUND AND BELOW SLAB PIPINGSHALL BE INSTALLED NO LESS THAN MINIMUM BURY PER CODE. ALL PIPING THROUGH SLAB, BURIED OR UNDERNEATH FOUNDATION SSD
G. REFER TO ARCHITECTURAL GRAPHICS DRAWINGS FOR SIGNAGE NOT SHOW.

WALL LEGENDS

NOTES:
S.S.D. SITE SPECIFC

METAL FRAMING- 1 HR FIRE RATED WALL
METAL FRAMING - NON RATED, INSULATED

KEY PLAN

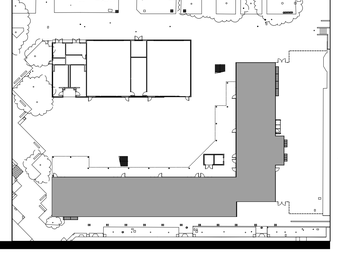

IDENTIFICATION STAMP
DIV. OF THE STATE ARCHITECT
APP: 01-119994 INC:
REVIEWED FOR
SS ☑ FLS ☑ ACS ☑
DATE: 08/16/2022

QUATTROCCHI KWOK ARCHITECTS
Main Office:
636 Fifth Street, Santa Rosa, CA 95404
Pleasanton Office:
600 Main Street, Suite E,
Pleasanton, CA 94566
(707) 576-0829

COSTA ENGINEERS INC.
317 11th Ave San Diego, CA 92101 P: 619.687.1184 F: 619.687.1185

REGISTERED PROFESSIONAL ENGINEER
CHRISTOPHER J. DEL BOSE
No. 30000
Exp. 12-31-22
MECHANICAL
STATE OF CALIFORNIA

LIBERTY HIGH SCHOOL

NEW CLASSROOM BUILDING

850 2ND STREET
BRENTWOOD, CA
94513

LIBERTY UNION HIGH SCHOOL DISTRICT

REVISIONS

DSA APP NO. 01-119994

ARCH PROJECT NO:	1925.00
DRAWN BY:	Author
DRAWING SCALE:	1/8" = 1'-0"
PTN: 61721-83	FILE NO: 7-H4

CONSTRUCTION DOCUMENTS
JUNE 24, 2022

SHEET TITLE
BLDG A PLUMBING SECOND FLOOR WATER AND GAS PLAN

SHEET NUMBER
P-A2.4

7/26/2022 4:23:48 PM
C:\Users\bmungandi\OneDrive - Costa Engineers\Documents\21038 Liberty HS Classroom Bldg RVT20_bMungandi.rvt

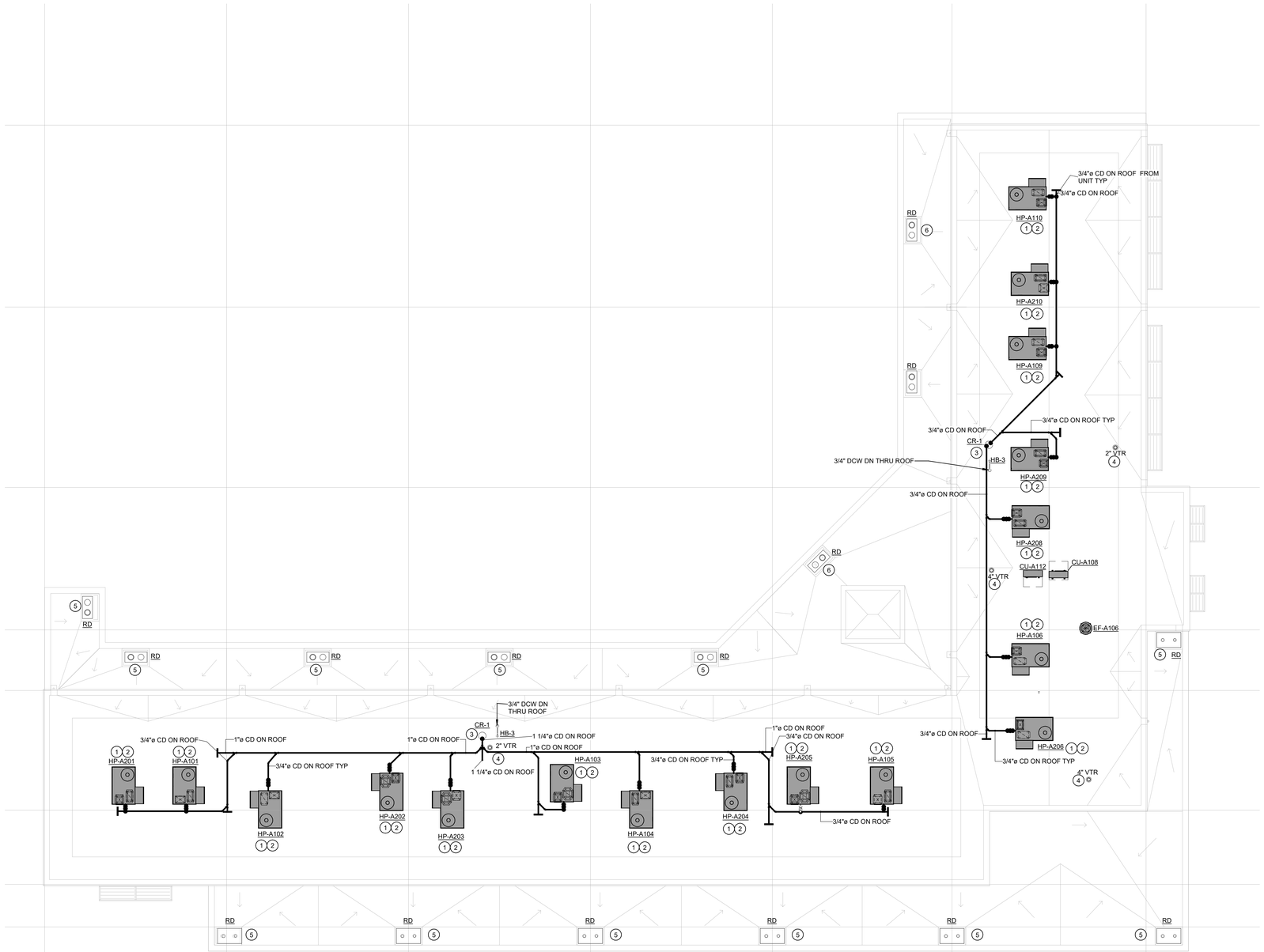

1 **BLDG A ROOF PLUMBING PLAN**
1/8" = 1'-0"

GENERAL NOTES

A. FOR PLUMBING GENERAL NOTES, LEGENDS, AND SYMBOLS, REFER TO SHEET P1.1

B. PLUMBING CONTRACTOR SHALL BE RESPONSIBLE FOR COORDINATING THE PLUMBING WORK WITH OTHER TRADES.

C. SEE ARCHITECTURAL DRAWINGS FOR EXACT LOCATION OF PLUMBING FIXTURES.

D. PROVIDE WALL CLEANOUTS FOR SINKS AND URINALS AS REQUIRED.

E. FOR ACCESSIBLE WATER CLOSETS, LOCATE VALVE HANDLE ON THE ACCESSIBLE SIDE PER ACCESSIBLE REQUIREMENTS.

F. ALL UNDERGROUND AND BELOW SLAB PIPINGSHALL BE INSTALLED NO LESS THAN MINIMUM BURY PER CODE. ALL PIPING THROUGH SLAB, BURIED OR UNDERNEATH FOUNDATION SSD

G. REFER TO ARCHITECTURAL GRAPHICS DRAWINGS FOR SIGNAGE NOT SHOW.

SHEET NOTES

1. PROVIDE 3/4" CONDENSATE CONNECTION FROM UNIT SEE DETAIL A/P-3.2
2. RUN CONDENSATE ON ROOF PER DETAIL B/P-3.2
3. DRAIN CONDENSATE INTO CONDENSATE RECEIVER PER DETAIL E/P-3.2
4. VENT THRU ROOF TO BE LOCATED MINIMUM OF 10'-0" AWAY FROM ANY OSA INTAKE H/P-3.1
5. ROOF DRAIN CONNECT 3" RWL TO DOWNSPOUT (SAD) TERMINATE 3" OD TO DAYLIGHT AT EVE

WALL LEGENDS

NOTES:
S.S.D. SITE SPECIFC

METAL FRAMING- 1 HR FIRE RATED WALL

METAL FRAMING - NON RATED, INSULATED

KEY PLAN

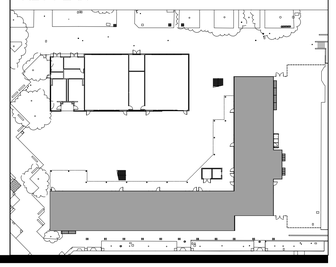

IDENTIFICATION STAMP
DIV. OF THE STATE ARCHITECT
APP: 01-119994 INC:
REVIEWED FOR
SS ☑ FLS ☑ ACS ☑
DATE: 08/16/2022

QUATTROCCHI KWOK ARCHITECTS

Main Office:
636 Fifth Street, Santa Rosa, CA 95404
Pleasanton Office:
600 Main Street, Suite E,
Pleasanton, CA 94566
(707) 576-0829

COSTA ENGINEERS INC.
5174 Ute Lane Napa, CA 94558 P: 707.255.8177 Fax: 707.255.8873

REGISTERED PROFESSIONAL ENGINEER
CHRISTOPHER J. DEL BOSKE
No. 30000
Exp. 12-31-22
MECHANICAL
STATE OF CALIFORNIA

LIBERTY HIGH SCHOOL

NEW CLASSROOM BUILDING

850 2ND STREET
BRENTWOOD, CA
94513

LIBERTY UNION HIGH SCHOOL DISTRICT

REVISIONS

DSA APP NO. 01-119994

ARCH PROJECT NO:	1925.00
DRAWN BY:	Author
DRAWING SCALE:	1/8" = 1'-0"
PTN: 61721-83	FILE NO: 7-H4

CONSTRUCTION DOCUMENTS

JUNE 24, 2022

SHEET TITLE

BLDG A PLUMBING ROOF PLAN

SHEET NUMBER

P-A2.5

7/26/2022 4:23:50 PM

C:\Users\bmungandi\OneDrive - Costa Engineers\Documents\21039 Liberty HS Classroom Bldg RVT20_bMungandi.rvt

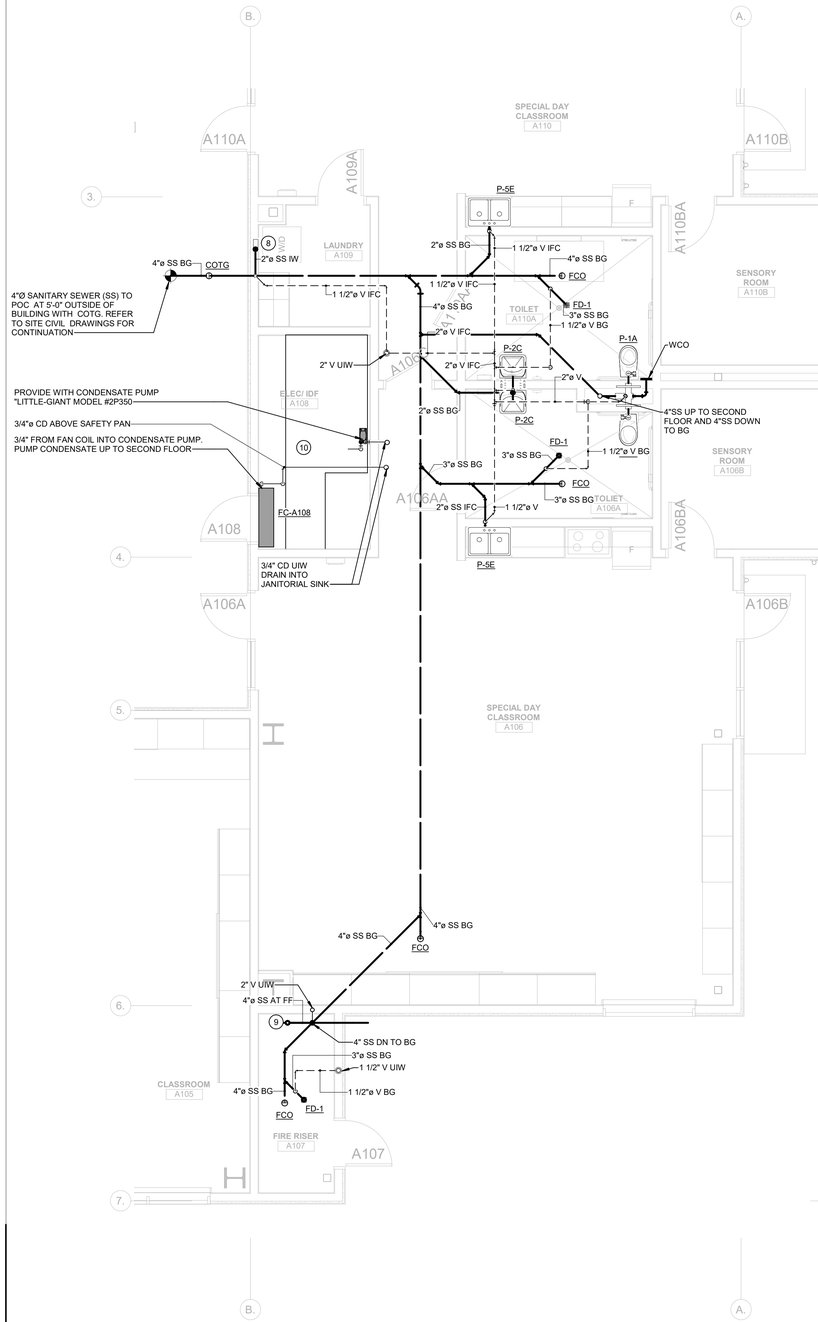

1 BLDG A PLUMBING FIRST FLOOR WASTE AND VENT PLAN- ENLARGEMENT
1/4" = 1'-0"

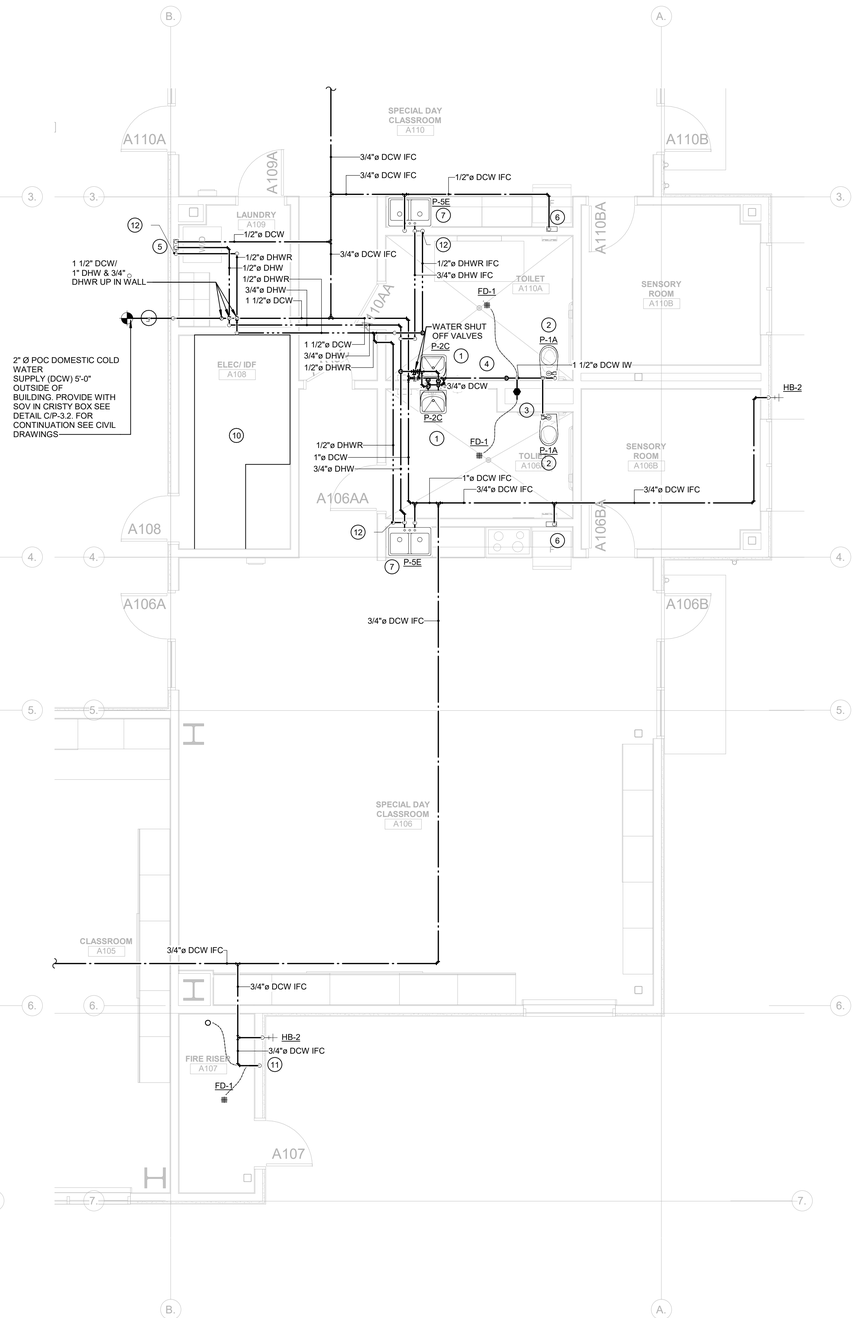

2 BLDG A PLUMBING FIRST FLOOR WATER AND GAS PLAN - ENLARGEMENT
1/4" = 1'-0"

GENERAL NOTES

A. FOR PLUMBING GENERAL NOTES, LEGENDS, AND SYMBOLS, REFER TO SHEET P1.1

B. PLUMBING CONTRACTOR SHALL BE RESPONSIBLE FOR COORDINATING THE PLUMBING WORK WITH OTHER TRADES.

C. SEE ARCHITECTURAL DRAWINGS FOR EXACT LOCATION OF PLUMBING FIXTURES.

D. PROVIDE WALL CLEANOUTS FOR SINKS AND URINALS AS REQUIRED.

E. FOR ACCESSIBLE WATER CLOSETS, LOCATE VALVE HANDLE ON THE ACCESSIBLE SIDE PER ACCESSIBLE REQUIREMENTS.

F. ALL UNDERGROUND AND BELOW SLAB PIPINGSHALL BE INSTALLED NO LESS THAN MINIMUM BURY PER CODE. ALL PIPING THROUGH SLAB, BURIED OR UNDERNEATH FOUNDATION SSD

G. REFER TO ARCHITECTURAL GRAPHICS DRAWINGS FOR SIGNAGE NOT SHOW.

SHEET NOTES

1. PROVIDE 3/4" DCW/DHW TO STAFF LAVATORY
2. PROVIDE 1 1/4" DCW TO WATER CLOSET
3. 1/2" UP TO WATER HAMMER ARRESTOR AND DN TO TRAP PRIMMER. RUN 1/2" DCW SOFT COPPER PIPES BELOW GRADE TO FLOOR DRAIN P-TRAPS. PROVIDE W/ ACESS PANEL
4. PROVIDE W/ 1 1/2" DCW SOV FOR A110A & A106A PROVIDE WITH ACCES PANEL.
5. PROVIDE W/ 1/2" DCW/DHW/DHWR TO WASHING MACHINE OUTLET BOX.
6. PROVIDE W/ 1/2" DCW TO ICE MAKER OUTLET BOX.
7. PROVIDE 3/4" DCW/DHW/DHWR TO SINK
8. PROVIDE W/ P TRAP AND 2" SS TO WASHING MACHINE OUTLET BOX.
9. PROVIDE W/ 6"Ø STAND PIPE DRAIN 48" TALL AFF TRANSITION TO 4"Ø DRAIN AT FF W/4" P-TRAP AT FF W/TRAP PRIMMER SEE DETAIL D/P-3.1
10. PIPING SAFETY DRAIN PAN PER DETAIL D/P-3.2
11. 1/2" DN TO TRAP PRIMMER. RUN 1/2" DCW SOFT COPPER PIPES BELOW GRADE TO FLOOR DRAIN P-TRAP AND ABOVE GRADE TO FIRE DRAIN P-TRAP. PROVIDE W/ ACESS PANEL
12. PROVIDE WITH CIRCUIT SETTER

WALL LEGENDS

NOTES:
S.S.D. SITE SPECIFC

METAL FRAMING- 1 HR FIRE RATED WALL

METAL FRAMING - NON RATED, INSULATED

KEY PLAN

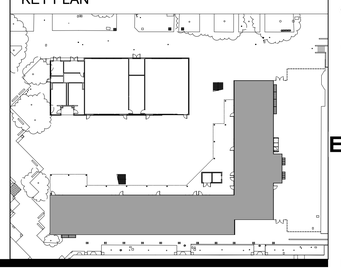

IDENTIFICATION STAMP
DIV. OF THE STATE ARCHITECT
APP: 01-119994 INC:
REVIEWED FOR
SS ☑ FLS ☑ ACS ☑
DATE: 08/16/2022

QUATTROCCHI KWOK ARCHITECTS

Main Office:
636 Fifth Street, Santa Rosa, CA 95404
Pleasanton Office:
600 Main Street, Suite E,
Pleasanton, CA 94566
(707) 576-0829

COSTA ENGINEERS INC.
3174 Ruffin Lane, Diego, CA 92123 P: 858-277-1881 FAX: 858-277-1883

REGISTERED PROFESSIONAL ENGINEER
CHRISTOPHER J. DEL BORGO
No. 30000
Exp. 12-31-22
MECHANICAL
STATE OF CALIFORNIA

LIBERTY HIGH SCHOOL

NEW CLASSROOM BUILDING

850 2ND STREET
BRENTWOOD, CA
94513

LIBERTY UNION HIGH SCHOOL DISTRICT

REVISIONS

DSA APP NO. 01-119994

ARCH PROJECT NO:	1925.00
DRAWN BY:	Author
DRAWING SCALE:	1/4" = 1'-0"
PTN: 61721-83	FILE NO: 7-H4

CONSTRUCTION DOCUMENTS

JUNE 24, 2022

SHEET TITLE

BLDG A PLUMBING ENLARGEMENTS

SHEET NUMBER

P-A2.6

7/26/2022 4:23:51 PM

C:\Users\tmungandi\OneDrive - Costa Engineers\Documents\21038 Liberty HS Classroom Bldg RVT20_tMungandi.rvt

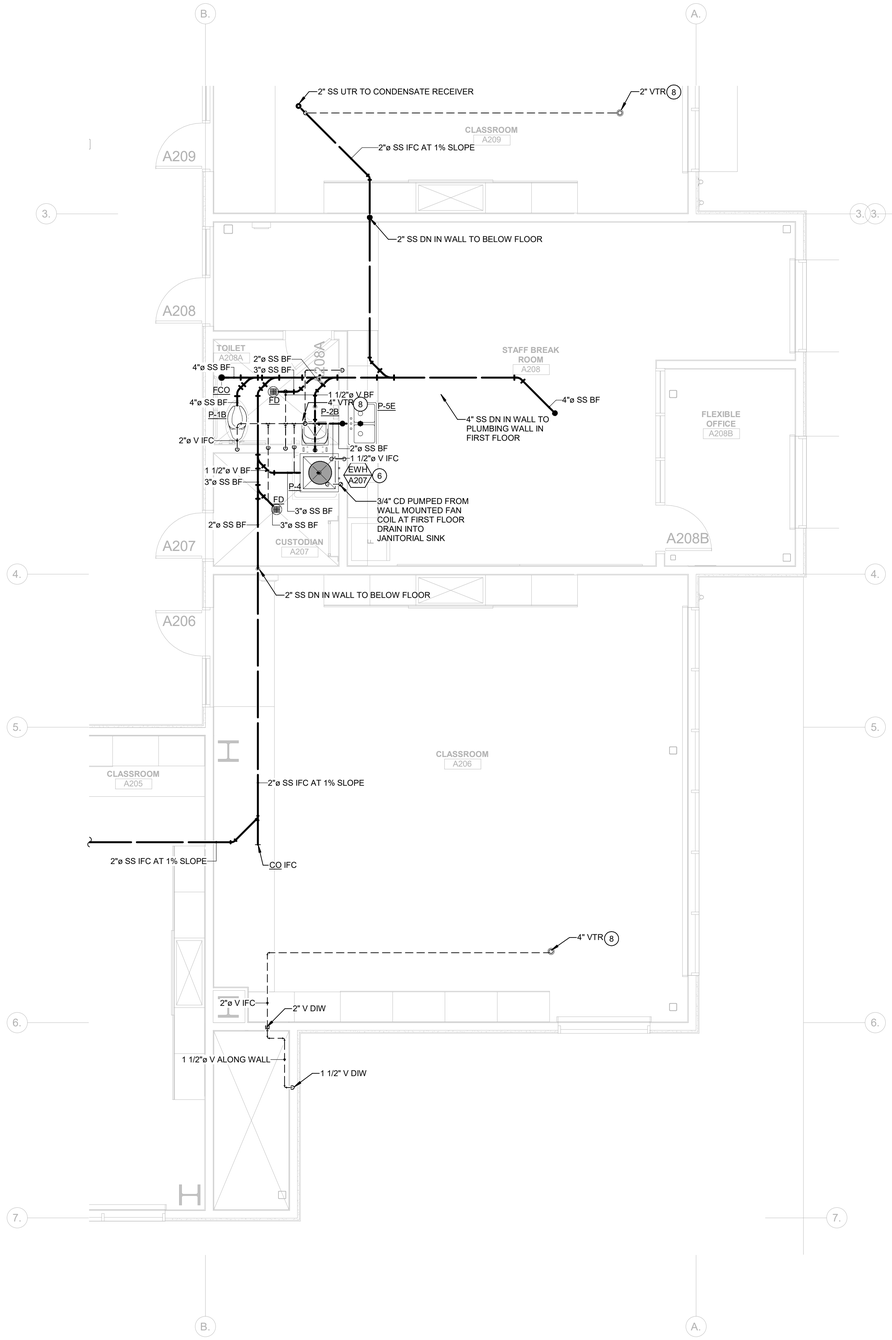

1 **BLDG A PLUMBING SECOND FLOOR WASTE AND VENT PLAN - ENLARGEMENT**
1/4" = 1'-0"

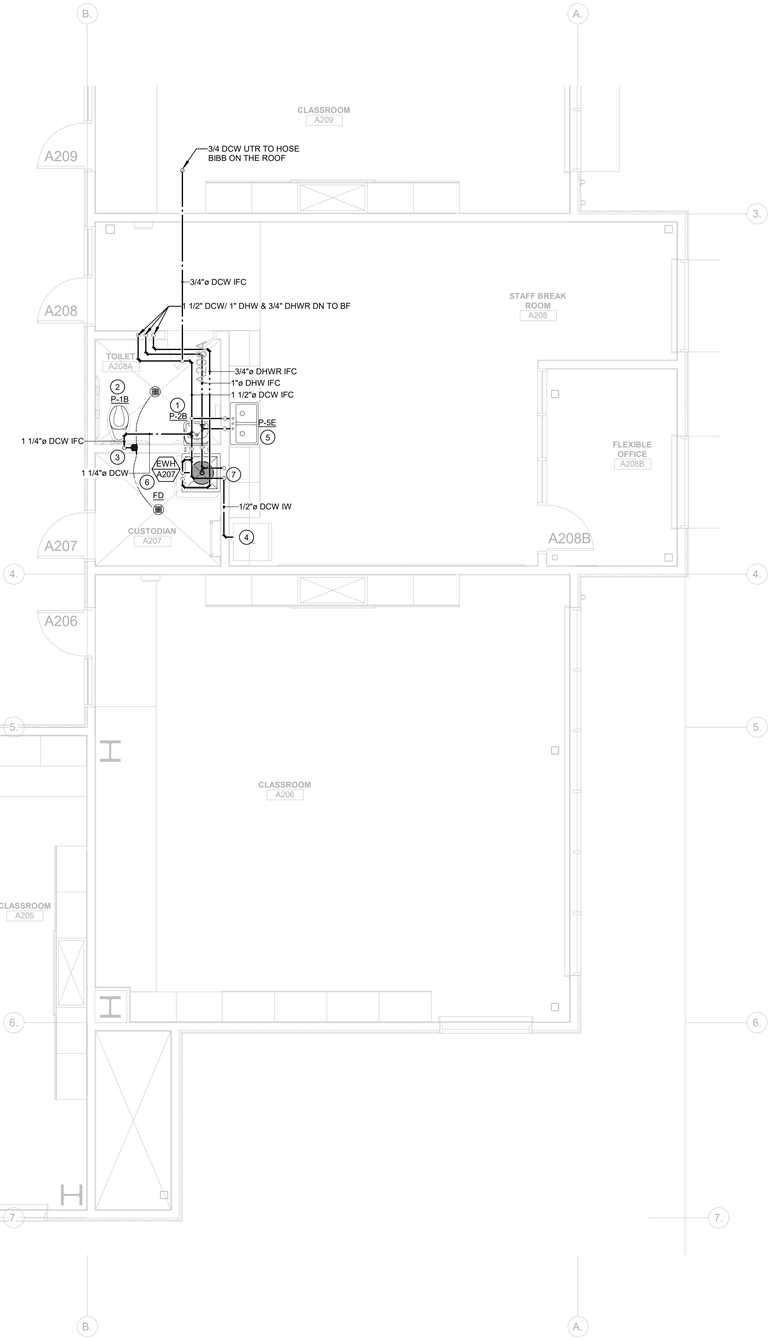

2 **BLDG A PLUMBING SECOND FLOOR WATER AND GAS PLAN - ENLARGEMENT**
1/4" = 1'-0"

GENERAL NOTES

A. FOR PLUMBING GENERAL NOTES, LEGENDS, AND SYMBOLS, REFER TO SHEET P1.1

B. PLUMBING CONTRACTOR SHALL BE RESPONSIBLE FOR COORDINATING THE PLUMBING WORK WITH OTHER TRADES.

C. SEE ARCHITECTURAL DRAWINGS FOR EXACT LOCATION OF PLUMBING FIXTURES.

D. PROVIDE WALL CLEANOUTS FOR SINKS AND URINALS AS REQUIRED.

E. FOR ACCESSIBLE WATER CLOSETS, LOCATE VALVE HANDLE ON THE ACCESSIBLE SIDE PER ACCESSIBLE REQUIREMENTS.

F. ALL UNDERGROUND AND BELOW SLAB PIPINGSHALL BE INSTALLED NO LESS THAN MINIMUM BURY PER CODE. ALL PIPING THROUGH SLAB, BURIED OR UNDERNEATH FOUNDATION SSD

G. REFER TO ARCHITECTURAL GRAPHICS DRAWINGS FOR SIGNAGE NOT SHOW.

SHEET NOTES

1. PROVIDE 1/2" DCW/DHW TO STAFF LAVATORY
2. PROVIDE 1 1/4" DCW TO WATER CLOSET
3. 1/2" UP TO WATER HAMMER ARRESTOR AND DN TO TRAP PRIMMER. RUN 1/2" DCW SOFT COPPER PIPES BELOW GRADE TO FLOOR DRAIN P-TRAPS. PROVIDE W/ ACESS PANEL
4. PROVIDE W/ 1/2" DCW TO ICE MAKER OUTLET BOX.
5. PROVIDE 1/2" DCW/DHW TO SINK
6. INSTALL TANK WATER HEATER SEE DETAIL A/P-3.1
7. PROVIDE 1/2" DCW/DHW TO JANITORIAL SINK
8. VENT THRU ROOF SEE DETAIL H/P-3.1

WALL LEGENDS

NOTES:
S.S.D. SITE SPECIFC

METAL FRAMING- 1 HR FIRE RATED WALL

METAL FRAMING - NON RATED, INSULATED

KEY PLAN

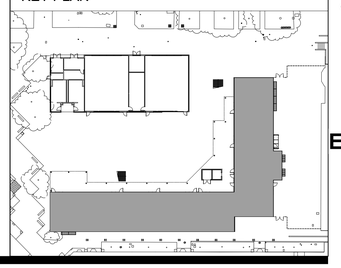

IDENTIFICATION STAMP
DIV. OF THE STATE ARCHITECT
APP: 01-119994 INC:
REVIEWED FOR
SS ☑ FLS ☑ ACS ☑
DATE: 08/16/2022

QUATTROCCHI KWOK ARCHITECTS

Main Office:
636 Fifth Street, Santa Rosa, CA 95404
Pleasanton Office:
600 Main Street, Suite E,
Pleasanton, CA 94566
(707) 576-0829

COSTA ENGINEERS INC.
317 N 10th San Diego, CA 92101 P: 619.687.1 Fax: 619.687.3

REGISTERED PROFESSIONAL ENGINEER
CHRISTOPHER J. DEL BOSKE
No. 30000
Exp. 12-31-22
MECHANICAL
STATE OF CALIFORNIA

LIBERTY HIGH SCHOOL

NEW CLASSROOM BUILDING

850 2ND STREET
BRENTWOOD, CA
94513

LIBERTY UNION HIGH SCHOOL DISTRICT

REVISIONS

DSA APP NO. 01-119994
ARCH PROJECT NO: 1925.00
DRAWN BY: Author
DRAWING SCALE: 1/4" = 1'-0"
PTN: 61721-83 FILE NO: 7-H4
CONSTRUCTION DOCUMENTS
JUNE 24, 2022

SHEET TITLE
BLDG A PLUMBING ENLARGEMENTS

SHEET NUMBER
P-A2.7

7/26/2022 4:23:52 PM
C:\Users\bmungandi\OneDrive - Costa Engineers\Documents\21030 Liberty HS Classroom Bldg RVT20_bMungandi.rvt

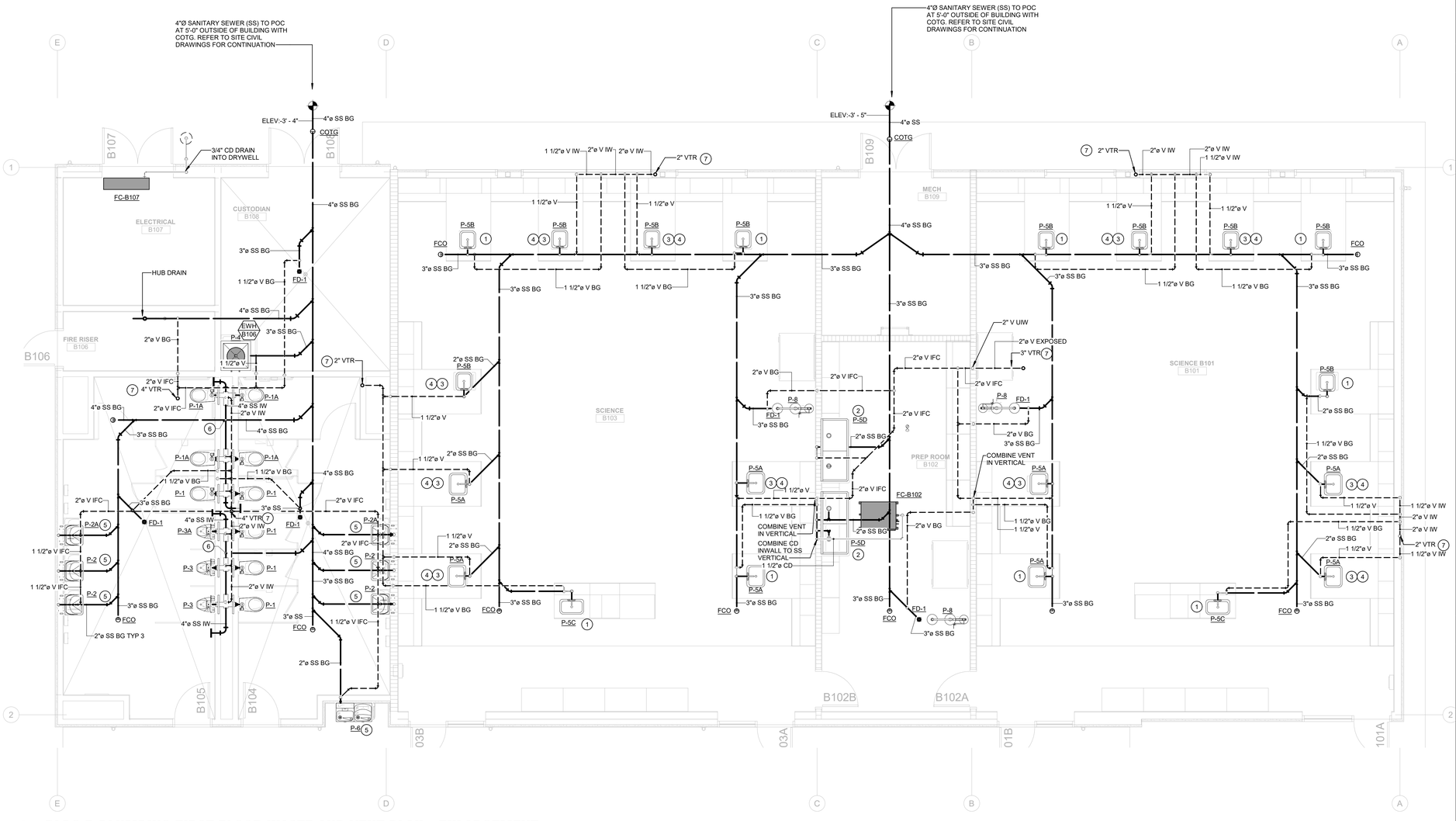

1 BLDG B PLUMBING FIRST FLOOR WASTE AND VENT PLAN - ENLARGEMENT

1/4" = 1'-0"

GENERAL NOTES

A. FOR PLUMBING GENERAL NOTES, LEGENDS, AND SYMBOLS, REFER TO SHEET P1.1

B. PLUMBING CONTRACTOR SHALL BE RESPONSIBLE FOR COORDINATING THE PLUMBING WORK WITH OTHER TRADES.

C. SEE ARCHITECTURAL DRAWINGS FOR EXACT LOCATION OF PLUMBING FIXTURES.

D. PROVIDE WALL CLEANOUTS FOR SINKS AND URINALS AS REQUIRED.

E. FOR ACCESSIBLE WATER CLOSETS, LOCATE VALVE HANDLE ON THE ACCESSIBLE SIDE PER ACCESSIBLE REQUIREMENTS.

F. ALL UNDERGROUND AND BELOW SLAB PIPINGSHALL BE INSTALLED NO LESS THAN MINIMUM BURY PER CODE. ALL PIPING THROUGH SLAB, BURIED OR UNDERNEATH FOUNDATION SSD

G. REFER TO ARCHITECTURAL GRAPHICS DRAWINGS FOR SIGNAGE NOT SHOW.

SHEET NOTES

1. ISLAND VENT WITH ACID DELUTION TRAP SEE DETAIL G/P-3.2
2. UTILITY SINK WITH 2 DELITUION TRAP SEE DETAIL H/P-3.2 COMBINE VENT IN WALL
3. INTEGRAL EPOXY SINK SAD. PROVIDE WITH ACID DELUTION TRAP SEE DETAIL H/P-3.2
4. VENT BELOW COUNTERTOP IN PLUMBING CHASE SAD
5. 2" SS DN TO BG & 1 1/2" V UP TO CEILING
6. 4" SS DN TO BG
7. VENT THRU ROOF TO BE LOCATED MINIMUM OF 10'-0" AWAY FROM ANY OSA INTAKE H/P-3.1

WALL LEGENDS

NOTES:
S.S.D. SITE SPECIFC

WOOD FRAMING- 1 HR FIRE RATED WALL

WOOD FRAMING - NON RATED, INSULATED

KEY PLAN

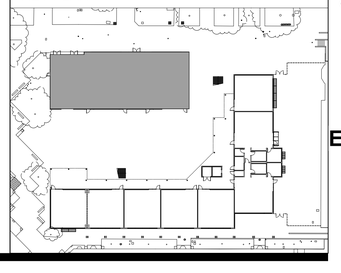

IDENTIFICATION STAMP
DIV. OF THE STATE ARCHITECT
APP: 01-119994 INC:
REVIEWED FOR
SS ☑ FLS ☑ ACS ☑
DATE: 08/16/2022

QUATTROCCHI KWOK ARCHITECTS
Main Office:
636 Fifth Street, Santa Rosa, CA 95404
Pleasanton Office:
600 Main Street, Suite E,
Pleasanton, CA 94566
(707) 576-0829

COSTA ENGINEERS INC.
5174 Tilo Lane Napa, CA 94558 p: 707.224.8171 fax: 707.253.8873
REGISTERED PROFESSIONAL ENGINEER CHRISTOPHER J. DEL BOSKE No. 30000 Exp. 12-31-22 MECHANICAL STATE OF CALIFORNIA

LIBERTY HIGH SCHOOL

NEW CLASSROOM BUILDING

850 2ND STREET
BRENTWOOD, CA
94513

LIBERTY UNION HIGH SCHOOL DISTRICT

REVISIONS

DSA APP NO. 01-119994

ARCH PROJECT NO:	1925.00
DRAWN BY:	Author
DRAWING SCALE:	1/4" = 1'-0"
PTN: 61721-83	FILE NO: 7-H4

CONSTRUCTION DOCUMENTS

JUNE 24, 2022

SHEET TITLE

BLDG B PLUMBING ENLARGEMENTS

SHEET NUMBER

P-B2.1

7/26/2022 4:23:55 PM

C:\Users\bmungandi\OneDrive - Costa Engineers\Documents\21038 Liberty HS Classroom Bldg RVT20_bMungandi.rvt

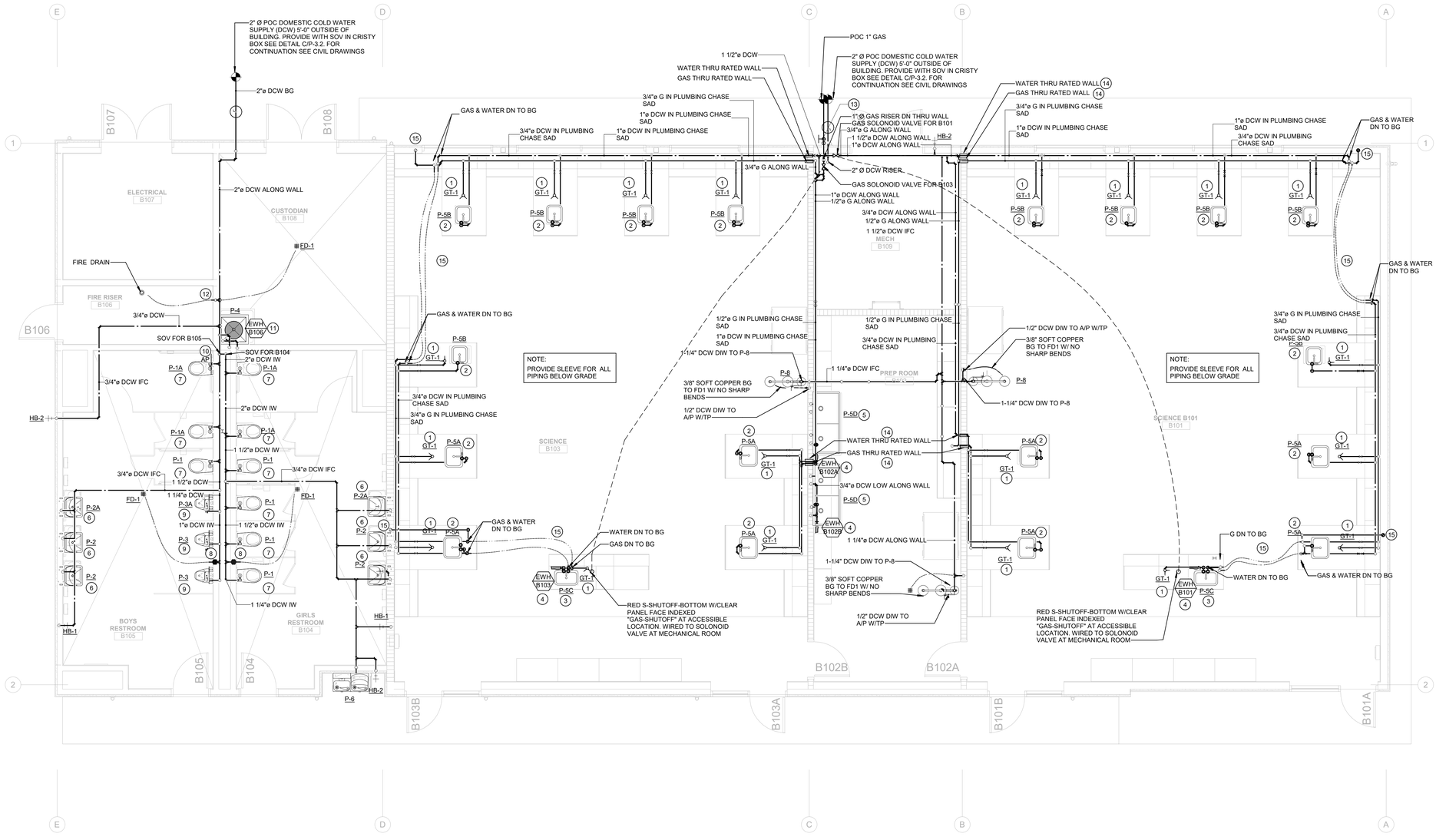

1 BLDG B PLUMBING FIRST FLOOR WATER AND GAS PLAN - ENLAGEMENT

1/4" = 1'-0"

GENERAL NOTES

A. FOR PLUMBING GENERAL NOTES, LEGENDS, AND SYMBOLS, REFER TO SHEET P1.1

B. PLUMBING CONTRACTOR SHALL BE RESPONSIBLE FOR COORDINATING THE PLUMBING WORK WITH OTHER TRADES.

C. SEE ARCHITECTURAL DRAWINGS FOR EXACT LOCATION OF PLUMBING FIXTURES.

D. PROVIDE WALL CLEANOUTS FOR SINKS AND URINALS AS REQUIRED.

E. FOR ACCESSIBLE WATER CLOSETS, LOCATE VALVE HANDLE ON THE ACCESSIBLE SIDE PER ACCESSIBLE REQUIREMENTS.

F. ALL UNDERGROUND AND BELOW SLAB PIPINGSHALL BE INSTALLED NO LESS THAN MINIMUM BURY PER CODE. ALL PIPING THROUGH SLAB, BURIED OR UNDERNEATH FOUNDATION SSD

G. REFER TO ARCHITECTURAL GRAPHICS DRAWINGS FOR SIGNAGE NOT SHOW.

SHEET NOTES

1. 1/2" FLEX GAS PIPE INSIDE CABINET PLUMBING CHASE WITH SOV TO GAS TURRET
2. 1/2" DOMESTIC COLD WATER PIPE INSIDE CABINET PLUMBING CHASE WITH SOV TO FAUCET
3. 1/2" DOMESTIC COLD WATER PIPE INSIDE CABINET PLUMBING CHASE WITH SOV TO FAUCET AND ELECTRIC WATER HEATER
4. INSTANTANEOUS ELECTRIC WATER HEATER MOUNTED PER DETAIL F/P-3.1
5. PROVIDE (2) 1/2" DCW & (2) 1/2" DHW FOR UTILITY SINK
6. PROVIDE 1/2" DCW TO LAVATORY
7. PROVIDE 1 1/4" DCW TO WATER CLOSET
8. 1/2" UP TO WATER HAMMER ARRESTOR AND DN TO TRAP PRIMMER. RUN 1/2" DCW SOFT COPPER PIPES BELOW GRADE TO FLOOR DRAIN P-TRAPS. PROVIDE W/ ACESS PANEL
9. PROVIDE 1" DCW TO URINAL
10. PROVIDE W/ 1 1/2" DCW SOV FOR B105 & 2" DCW SOV FOR B104 PROVIDE WITH ACCES PANEL ABOVE TOILET AT ROOM B105
11. TANK TYPE ELECTRIC WATER HEATER MOUNTED PER DETAIL B/P-3.1
12. 1/2" DCW DN TO TRAP PRIMMER. RUN 1/2" DCW SOFT COPPER PIPES BELOW GRADE TO P-TRAPS. PROVIDE W/ ACESS PANEL
13. GAS ENTRANCE WITH REGULATOR SEE DETAIL F/P-3.2
14. PIPE THRU RATED WALL SEE DETAIL F/P-3.3
15. FOR GAS PIPING BELOW GRADE SEE DETAIL J/P-3.2

WALL LEGENDS

NOTES:
S.S.D. SITE SPECIFC

WOOD FRAMING- 1 HR FIRE RATED WALL

WOOD FRAMING - NON RATED, INSULATED

KEY PLAN

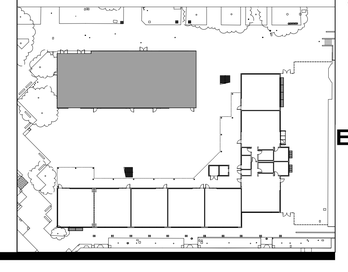

IDENTIFICATION STAMP
DIV. OF THE STATE ARCHITECT
APP: 01-119994 INC:
REVIEWED FOR
SS ☑ FLS ☑ ACS ☑
DATE: 08/16/2022

QUATTROCCHI KWOK ARCHITECTS

Main Office:
636 Fifth Street, Santa Rosa, CA 95404
Pleasanton Office:
600 Main Street, Suite E,
Pleasanton, CA 94566
(707) 576-0829

COSTA ENGINEERS INC.
3174 Ole Lane Napa, CA 94558 p: 707.255.8175 fax: 707.255.8173

REGISTERED PROFESSIONAL ENGINEER
CHRISTOPHER J. DEL BOSE
No. 30000
Exp. 12-31-22
MECHANICAL
STATE OF CALIFORNIA

LIBERTY HIGH SCHOOL

NEW CLASSROOM BUILDING

850 2ND STREET
BRENTWOOD, CA
94513

LIBERTY UNION HIGH SCHOOL DISTRICT

REVISIONS

DSA APP NO. 01-119994

ARCH PROJECT NO: 1925.00
DRAWN BY: Author
DRAWING SCALE: 1/4" = 1'-0"
PTN: 61721-83 FILE NO: 7-H4

CONSTRUCTION DOCUMENTS

JUNE 24, 2022

SHEET TITLE

BLDG B PLUMBING ENLARGEMENTS

SHEET NUMBER

P-B2.2

7/26/2022 4:23:57 PM

C:\Users\bmungandi\OneDrive - Costa Engineers\Documents\21038 Liberty HS Classroom Bldg RVT20_bMungandi.rvt

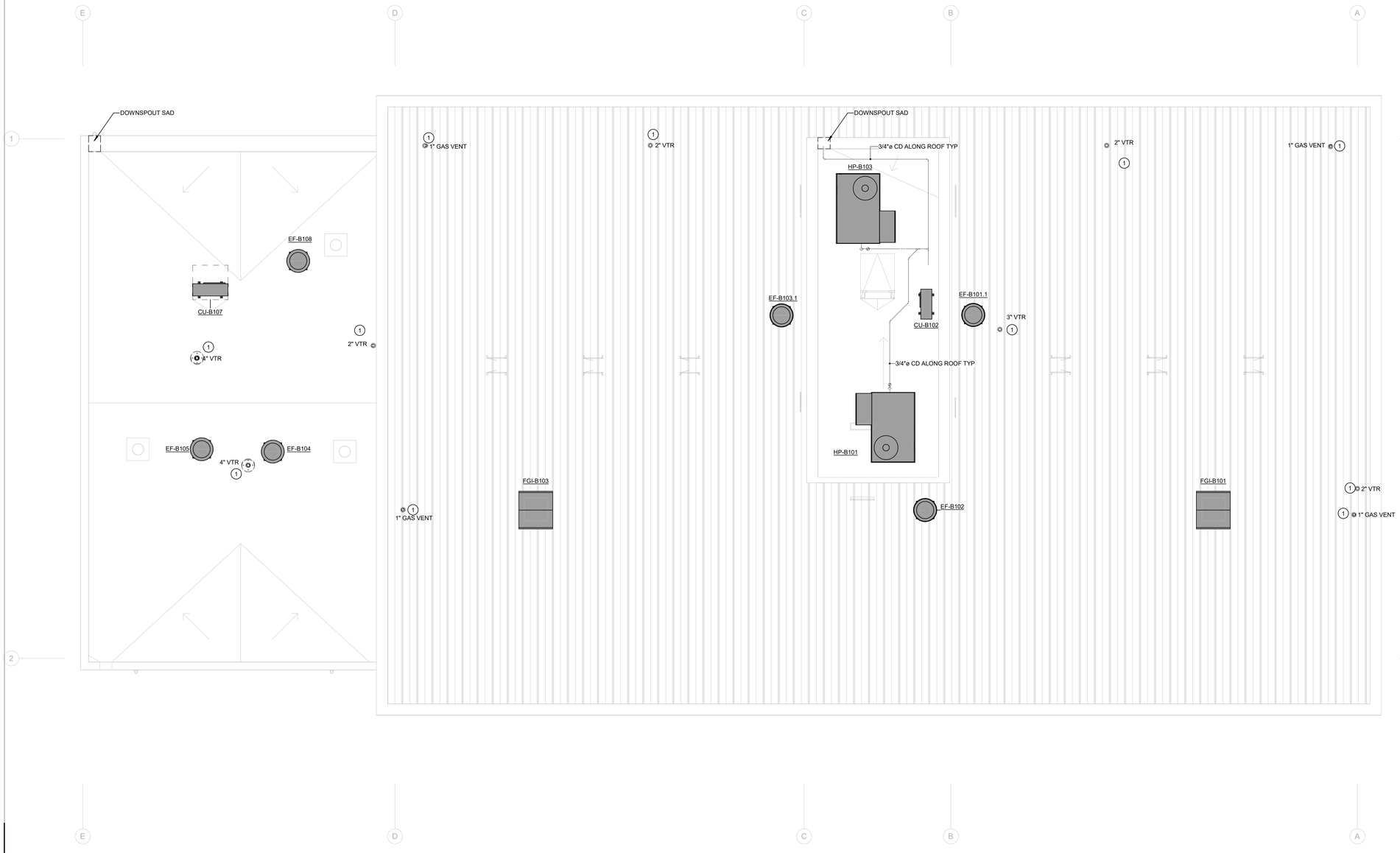

1 BLDG B ROOF PLUMBING PLAN

1/4" = 1'-0"

GENERAL NOTES

A. FOR PLUMBING GENERAL NOTES, LEGENDS, AND SYMBOLS, REFER TO SHEET P1.1

B. PLUMBING CONTRACTOR SHALL BE RESPONSIBLE FOR COORDINATING THE PLUMBING WORK WITH OTHER TRADES.

C. SEE ARCHITECTURAL DRAWINGS FOR EXACT LOCATION OF PLUMBING FIXTURES.

D. PROVIDE WALL CLEANOUTS FOR SINKS AND URINALS AS REQUIRED.

E. FOR ACCESSIBLE WATER CLOSETS, LOCATE VALVE HANDLE ON THE ACCESSIBLE SIDE PER ACCESSIBLE REQUIREMENTS.

F. ALL UNDERGROUND AND BELOW SLAB PIPINGSHALL BE INSTALLED NO LESS THAN MINIMUM BURY PER CODE. ALL PIPING THROUGH SLAB, BURIED OR UNDERNEATH FOUNDATION SSD

G. REFER TO ARCHITECTURAL GRAPHICS DRAWINGS FOR SIGNAGE NOT SHOW.

SHEET NOTES

1. VENT THRU ROOF TO BE LOCATED MINIMUM OF 10'-0" AWAY FROM ANY OSA INTAKE (H / P-3.1)
2. PROVIDE 3/4" CONDENSATE CONNECTION FROM UNIT SEE DETAIL (A / P-3.2)
3. RUN CONDENSATE ON ROOF PER DETAIL (B / P-3.2)
4. DRAIN CONDENSATE INTO ROOF DRAIN PER DETAIL (E / P-3.2)

WALL LEGENDS

NOTES:
S.S.D. SITE SPECIFC

WOOD FRAMING- 1 HR FIRE RATED WALL

WOOD FRAMING - NON RATED, INSULATED

KEY PLAN

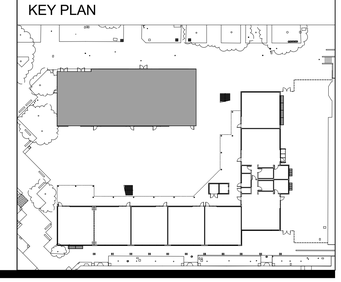

IDENTIFICATION STAMP
DIV. OF THE STATE ARCHITECT
APP: 01-119994 INC:
REVIEWED FOR
SS ☑ FLS ☑ ACS ☑
DATE: 08/16/2022

QUATTROCCHI KWOK ARCHITECTS
Main Office:
636 Fifth Street, Santa Rosa, CA 95404
Pleasanton Office:
600 Main Street, Suite E,
Pleasanton, CA 94566
(707) 576-0829

COSTA ENGINEERS INC.
317 N 10th San Diego, CA 94139 ph. 619.234.8777 fax 619.233.8873

REGISTERED PROFESSIONAL ENGINEER
CHRISTOPHER J. DEL BOSKE
No. 30000
Exp. 12-31-22
MECHANICAL
STATE OF CALIFORNIA

LIBERTY HIGH SCHOOL

NEW CLASSROOM BUILDING

850 2ND STREET
BRENTWOOD, CA
94513

LIBERTY UNION HIGH SCHOOL DISTRICT

REVISIONS

DSA APP NO. 01-119994

ARCH PROJECT NO:	1925.00
DRAWN BY:	Author
DRAWING SCALE:	1/4" = 1'-0"
PTN: 61721-83	FILE NO: 7-H4

CONSTRUCTION DOCUMENTS

JUNE 24, 2022

SHEET TITLE

BLDG B PLUMBING ROOF PLAN

SHEET NUMBER

P-B2.3

7/26/2022 4:23:59 PM

C:\Users\bmungandi\OneDrive - Costa Engineers\Documents\21038 Liberty HS Classroom Bldg RVT20_bMungandi.rvt

DETAIL NOTES:

1. FOR DETAIL OF OVERHEAD SPRINKLER SYSTEM RISER, SEE 1/FP6.1
2. UNDERGROUND WORK TO COUPLING WITH END CAP, 12" ABOVE FINISH GRADE
3. PIPE SLEEVE NOMINALLY 4" GREATER IN DIAMETER THAN THE UNDERGROUND RISER IN ACCORDANCE WITH NFPA 13 9.3.4.2, SEE PLANS FOR SIZE
4. AMES IN-BUILIDNG RISER SERIES IBR TYP 304 SS TO 5'-0' OUTSIDE BUILDING, SEE PLANS FOR SIZE
5. THRUST BLOCK SEE DETAIL 3/FP-0.1.
6. HYDRAULIC CALCULATION NODE, TYPICAL.
7. FILL ANNULAR SPACE WITH FLEXIBLE FIRE CAULK IN ACCORDANCE WITH NFPA13-9.3.4.8.
8. BELL RESTRAINT HARNESS.

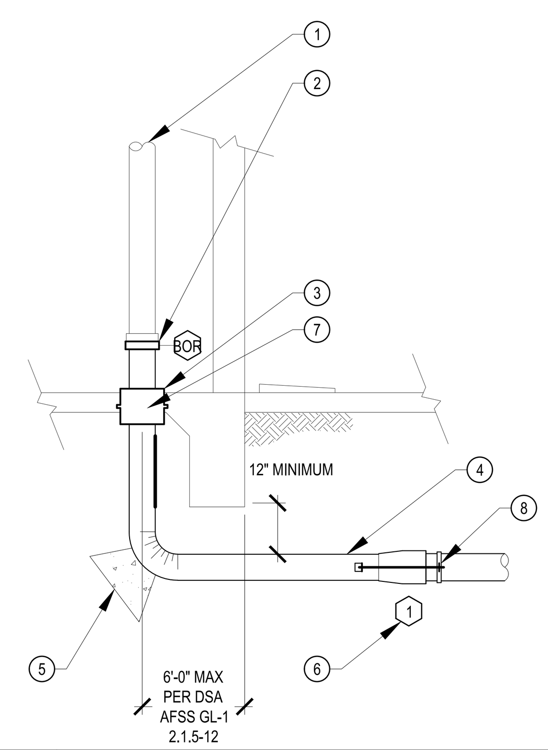

1 UNDERGROUND RISER N.T.S.

DETAIL NOTES:

1. SELECT NATIVE SOILS, 90% COMPACTION FOR AREAS TO BE LEFT IN NATIVE STATE ONLY. CAP AREAS IN UNPAVED ROADWAYS WITH 12" CLASS 2 AGGRERAGATE BASE, 95% COMPACTION
2. SAWCUT PAVEMENT EACH SIDE OF TRENCH 6' FROM TRENCH EDGE, REMOVE PAVEMENT AND BASEROCK, REPLACE AND RECOMPOST BASEROCK TACKCOAT EDGE AND REPAVE
3. SELECT SAND BACKFILL AT 95% COMPACTION
4. CLASS 2 AGGREGATE BASEROCK
5. PLASTIC WARNING TAPE MARKED "FIRE WATER"
6. 10 GA. COPPER TRACE WIRE COATED AND STRANDED TAPED ON TOP OF ALL NON-METALLIC PIPE
7. SAND BEDDING MATERIAL(95% COMPACTION)
8. FIRE SERVICE PIPING

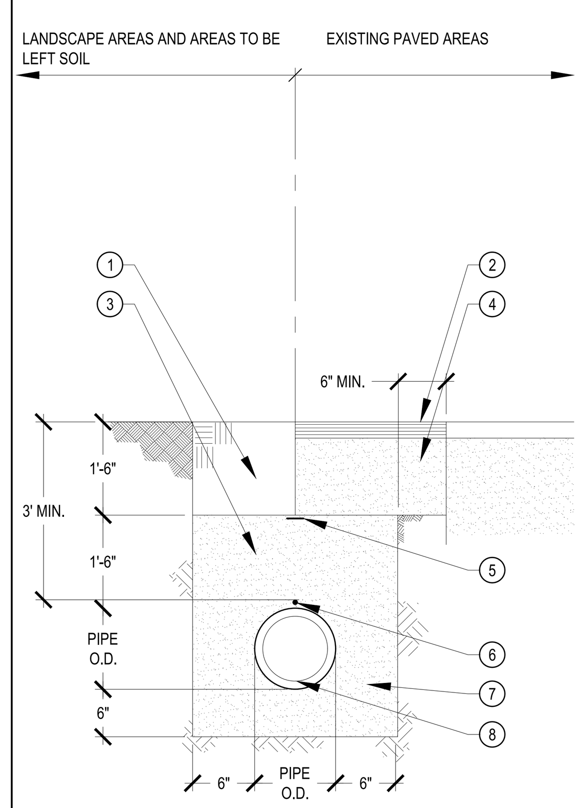

2 UTILITY TRENCH N.T.S.

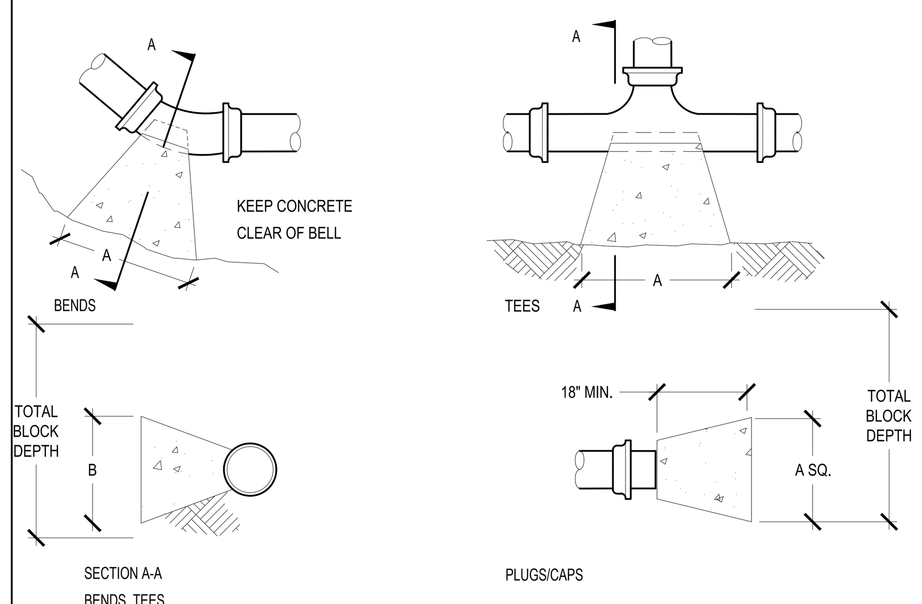

SOIL BEARING CAPACITY 2000 PSF FOR CLAYEY SAND SOILS TYPE ACCORDANCE WITH NFPA 13: TABLE A10.6(c). SEE GEOTECHICAL REPORT FOR DESCRIPTION OF SOIL CONDITIONS.

TRUST BLOCK CALCULATIONS PER NFPA 13: A10.6.1(b)
6"-90 BEND AREA = (7.9 S.F.)(225 PSI/100PSI)(1000 PSF/2000PSF) = 8.9 S.F.
6"-45 BEND AREA = 8.9 S.F. x 0.541 = 4.8 S.F.
6"-22.5 BEND AREA = 8.9 S.F. x 0.275 = 2.5 S.F.
6"-DEAD END AREA = (5.6 S.F.)(225 PSI/100 PSI)(1000 PSF/2000PSF) = 6.3 S.F.

PIPE SIZE	90° BENDS			45° BENDS			22.5° BENDS			TEES AND PLUGS		
	SQ. FT.	"A"	"B"	SQ. FT.	"A"	"B"	SQ. FT.	"A"	"B"	SQ. FT.	"A"	"B"
6	8.9	53"	24"	4.8	39"	18"	2.5	30"	12"	6.3	43"	21"

BASED ON A WATER PRESSURE OF 225 POUNDS PER SQUIRE INCH AND A SOIL RESISTANCE OF 2000 POUNDS PER SQUARE FOOT, AND SAFETY FACTOR OF 1.5 IN ACCORDANCE WITH NFPA 13(2016) TABLE A.10.6.1(b).

TOTAL BLOCK DEPTH SHALL BE AT LEAST TWICE THE BLOCK DEPTH "B" IN ACCORDANCE WITH NFPA 24.

JOINT RESTRAINT SHALL UTILIZE BOTH THRUST BLOCKS AND MEGALUG MECHANICAL JOINT RESTRAINT FITTINGS PER LOCAL FIRE MARSHAL

3 THRUST BLOCK N.T.S.

UNDERGROUND FIRE SERVICE GENERAL NOTES:

NFPA 24 (2016) SEC. 10.4.1.1 ALL BOLTED JOINT ACCESSORIES SHALL BE CLEANED AND THOROUGHLY COATED WITH ASPHALT OR OTHER CORROSION-RETARDING MATERIAL AFTER INSTALLATION. ALL METALLIC PIPE FITTINGS SHALL BE PROTECTED FROM CORROSIVE SOIL IN ACCORDANCE WITH SPECIFICATION 21 10 00.

NFPA 24 (2016) SEC. 10.8.3.5 AFTER INSTALLATION RODS, NUTS, BOLTS, WASHER, CLAMPS, AND OTHER RESTRAINING DEVICE, EXCEPT THRUST BLOCKS, SHALL BE CLEANED AND THOROUGHLY COATED WITH A BITUMINOUS OR OTHER ACCEPTABLE CORROSION-RETARDING MATERIALS

NFPA 24 (2016) SEC. 10.8.2 THRUST BLOCKS SHALL BE OF A CONCRETE MIX NOT LEANER THAN ON PART CEMENT, TWO AND ONE-HALF PARTS SAND, AND FIVE PARTS STONE WITH A MINIMUM COMPRESSIVE STRENGTH (Fc) OF 2500 PSI. THRUST BLOCKS SHALL BE PLACED BETWEEN UNDISTURBED EARTH AND THE FITTING TO BE RESTRAINED AND SHALL BE OF SUCH BEARING AS TO ENSURE ADEQUATE RESISTANCE TO THRUST TO BE ENCOUNTERED IN GENERAL, THRUST BLOCKS SHALL BE SO PLACED THAT THE JOINTS WILL BE ACCESSIBLE FOR INSPECTION AND REPAIR.

NFPA 24 (2016) SEC. 10.10.2.1 UNDERGROUND MAINS SHALL BE COMPLETELY FLUSHED TO REMOVE FOREIGN MATERIALS THAT MIGHT HAVE ENTERED THE MAIN DURING THE COURSE OF THE INSTALLATION PER TABLE 10.10.2.1.3 TO PRODUCE A VELOCITY OF 10 FEET PER SECOND IN PIPES. LOCAL FIRE JURISDICTION SHALL BE NOTIFIED OF DATE AND TIME OF TESTING SO THEY MAY OBSERVE TESTING

NFPA 24 (2016) SEC 10.10.2.2 ALL NEW PRIVATE UNDERGROUND FIRE SERVICE MAINS SHALL BE TESTED HYDROSTATICALLY AT NO LESS THAN 200-PSI PRESSURE FOR A MINIMUM OF TWO HOUR. LOCAL FIRE JURISDICTION SHALL BE NOTIFIED OF DATE AND TIME OF TESTING AND SHALL OBSERVE AND/OR ASSIST IOR WHENEVER POSSIBLE

THE AMOUNT OF LEAKAGE IN BURIED PIPING SHALL BE MEASURE AT THE SPECIFIED TEST PRESSURE BY PUMPING FROM A CALIBRATED CONTAINER. FOR NEW PIPE, THE AMOUNT OF LEAKAGE AT THE JOINTS SHALL NOT EXCEED TWO QUARTS PER HOUR PER 100 GASKETS OR JOINTS IRRESPECTIVE OF PIPE DIAMETER. NO VISIBLE LEAKAGE SHALL BE ALLOWED IN ABOVEGROUND PIPING. (ALSO SEE SEC. 10.10.2.6 FOR ALLOWABLE LEAKAGE)

HYDROSTATIC TESTS SHALL BE MADE BEFORE THE JOINTS ARE COVERED SO THAT ANY LEAKS MAY BE READILY DETECTED.

NFPA 24 (2016) SEC 10.10 BEFORE ASKING FINAL APPROVAL OF AN INSTALLATION BY THE INSPECTOR OF RECORD, THE INSTALLING COMPANY SHALL FURNISH A CONTRACTORS MATERIAL AND TEST CERTIFICATE TO BE SUBMITTED TO THE OWNER. A TYPICAL CERTIFICATE IS SHOWN IN FIGURE 10.10.1. THIS FORM SHALL BE GIVEN TO THE APPROVING AUTHORITY, OWNER, AND CONTRACTOR.

NFPA 24 (2016)SEC 10.4 THE DEPTH OF COVER OVER WATER PIPES SHALL BE NOT LESS THAN 2'-6" TO PREVENT MECHANICAL DAMAGE AD SHALL BE BURIED A MINIMUM OF 3'-0" UNDER DRIVEWAYS.

THE METHOD USED FOR UNDERGROUND FIRE LINES WHEN ENTERING BUILDING UNDER CONCRETE. NFPA 24(2016) SEC, 12.2.6, NFPA (2016)9.3.4.2 REQUIRES A CLEARANCE BY A PIPE SLEEVE WITH A NOMINAL DIAMETER 4 IN. LARGER THAN THE NOMINAL DIAMETER OF THE SUPPLY PIPING 4 IN. NOMINAL AND LARGER. (I.E FIRE LINES NOMINAL 6IN, REQUIRES 10 IN. SLEEVE)

CPC SEC. 601.1 (2016) PVD PIPING MAY BE INSTALLED TO 5 FEET OUTSIDE THE FOUNDATION OF ANY BUILDING OR STRUCTURE OR PARTS THEROF. IT SHALL BE BURIED IN THE GROUND FOR IS ENTIRE LENGTH. IS SHALL NOT BE INSTALLED WITHIN OR UNDER ANY BUILDING OR STRUCTURE. (DUCTILE PIPE SHALL BE INSTALLED WITHIN 5 FEET OF BUILDING)

OVERHEAD FIRE SPRINKLER SYSTEM GENERAL NOTES:

NFPA 13 (2016) SEC, 9.2.1.3.3.4 WHERE FLEXIBLE SPRINKLER HOSE FITTINGS ARE USED TO CONNECT SPRINKLER TO BRANCH LINES IN SUSPENDED CEILINGS, A LABEL LIMITING RELOCATION OF THE SPRINKLER SHALL BE PROVIDED ON THE ANCHORING COMPONENT.

NFPA 13 (2016) SEC. 10.10.2.1 UNDERGROUND MAINS AND LEAD-IN CONNECTION MADE TO OVERHEAD SPRINKLER PIPING SYSTEMS SHALL BE COMPLETELY FLUSHED

NFPA 13(2016) SEC. 10.10.2.2 ALL INTERIOR PIPING AND APPURTENANCES SUBJECT TO SYSTEM WORKING PRESSURE SHALL BE HYDROSTATICALLY TESTED AT 200 PSI AND SHALL MAINTAIN THAT PRESSURE WITHOUT LOSS FOR 2 HOURS. LOCAL FIRE DEPARTMENT SHOULD BE NOTIFIED OF DATE AND TESTING SO THEY MAY OBSERVE TESTING.

NFPA 13 (2016) SEC 6.2.9 PROVIDE SPARE SPRINKLER HEAD CABINET, SPRINKLER WRENCH, AND NO FEWER THAT A TOTAL OF 6 SPARE SPRINKLER HEADS MATCHING THE TYPES AND TEMPERATURE RATINGS IN EACH PROTECTED BUILDING FOR SYSTEMS LESS THAN 300 SPRINKLERS AND FEWER THAN 12 FOR SYSTEMS HAVING 300 TO 1000 SPRINKLERS.

NFPA 13 (2016) SEC, 9.3.6.1 PROVIDE RESTRAINT OF BRANCH LINES BY USING ONE OF THE FOLLOWING:
(1) LISTED SWAY BRACE ASSEMBLY
(2) WRAPAROUND U-HOOK SATISFYING THE REQUIREMENTS OF 9.3.5.5.11
(3) NO. 12 440 LB (200 KG) WIRE INSTALLED AT LEAST 45 DEGREES FROM THE VERTICAL PLANE AND ANCHORAGE ON BOTH SIDES OF THE PIPE.
(4) CPVC HANGERS LISTED TO PROVIDE RESTRAINT
(5) HANGER NOT LESS THAN 45 DEGREES FROM VERTICAL INSTALLED WITHIN 6 IN. OF THE VERTICAL HANGER ARRANGED FOR RESTRAINT AGAINST UPWARD MOVEMENT, PROVIDED IT IS UTILIZED SUCH THAT L/R DOES NOT EXCEED, WHERE THE ROD EXTENDS TO THE PIPE OR A SURGE CLOP HAS BEEN INSTALLED.

NFPA 72 (2016) SEC, 17.12.2 SPRINKLER FLOW SWITCH SHALL BE TESTED BY IOR TO CONFIRM THAT WHEN THE INSPECTOR'S TEST VALVE IS ACTIVATED AN ALARM WILL SOUND IN NOT MORE THAN 90 SECONDS.

NFPA 13 (2016) SEC. 6.9.3 FLOW SWITCH SHALL BE CONNECTED TO AN OUTSIDE ALARM BELL FOR EACH RISER. APPROVED IDENTIFICATION SIGN SHALL BE PROVIDED FOR OUTSIDE ALARM BELL "SPRINKLER FIRE ALARM WHEN BELL RINGS CALL 911/FIRE DEPARTMENT.

THE PLANS SHALL INCLUDE THE INFORMATION ON THE HYDRAULIC DESIGN INFORMATION SIGN, IN COMPLIANCE WITH NFPA 13 SECTION 23.1.3 ITEM 31 AND CBC CHAPTER 35 AMENDMENTS TO NFPA 13 SECTION 25.5.1 AND 25.5.2

NFPA 13 (2016) SEC. 25.1(3) SPRINKLER CONTRACTOR (C16) SHALL COMPLETE AND SIGH CONTRACTOR'S MATERIAL AND TEST CERTIFICATE FOR THE OVERHEAD SPRINKLER SYSTEM USING FORM IN FIGURE 251 THIS COMPLETED FORM SHALL BE GIVEN TO THE APPROVING AUTHORITY, OWNER AND CONTRACTOR.

NFPA 13 (2016) SEC. 25.1.3.4.1 THE MAIN DRAIN VALVE SHALL BE OPENED AND REMAIN OPENED UNTIL THE SYSTEM PRESSURE STABILIZES. THE STATIC AND RESIDUAL PRESSURES SHALL BE RECORDED ON THE CONTRACTOR'S TEST CERTIFICATE.

TITLE 19 ARTICLE (A) A LABEL OF SELF-ADHESIVE TYPE SHALL BE PLACED ON THE FIRE DEPARTMENT CONNECTION OR ON THE RISER FOR THE FIRE SPRINKLER SYSTEM WITH THE DATE OF SERVICE AND/OR DATE OF INSTALLATION WAS PREFORMED AND LICENSE NUMBER OF PERSON PERFORMING SERVICE WORK.

THE SPRINKLER CONTRACTOR SHALL HAVE A REPRESENTATIVE PRESENT AT THE ROUGH-IN/HYDRO INSPECTION.

NFPA 13 (2016) SEC. 9.3.4.2 WHERE PIPE PASSES THROUGH HOLES IN PLATFORMS, FOUNDATIONS, WALLS, OR FLOORS, THE HOLES SHALL BE SIZED SUCH THAN THE DIAMETER OF THE HOLE IS NOMINALLY 2' LARGER THAN THE PIPE 1" NOMINAL TO 3½" NOMINAL AND 4" LARGER THAN PIPE FOR PIPE 4" NOMINAL AND LARGER.

DSA GENERAL NOTES

1. THE INTENT OF THE CONTRACT DOCUMENTS IS TO ADD CLASSROOM BUILDINGS TO THE SCHOOL'S CAMPUS. SHOULD ANY CONDITIONS DEVELOP NOT COVERED BY THE CONTRACT DOCUMENTS, A CONSTRUCTION CHANGE DOCUMENT DETAILING AND SPECIFYING THE REQUIRED WORK SHALL BE SUBMITTED TO AND APPROVED BY DSA BEFORE PROCEEDING WITH THE WORK.
2. ALL HANGERS AND SEISMIC SWAY BRACING SHALL BE DESIGNED AND INSTALLED PER NFPA 13 AND CHAPTER 16A CALIFORNIA BUILDING CODE
3. ALL ANCHORAGE SHALL BE INSTALLED IN ACCORDANCE WITH DETAILS ON THE DSA APPROVED DRAWINGS
4. NO DEMOLITION SHALL BEGIN UNTIL PLANS INCLUDING THE DEMOLITION WORK HAVE BEEN APPROVED BY DSA.

FIRE DEPARTMENT CONNECTIONS:

NFPA 13(2016) SEC. 8.17.2.5.1 CHECK-VALVE SHALL BE PROVIDED AT FIRE DEPARTMENT CONNECTION ASSEMBLY (FDC) TO PREVENT WATER (PRESSURE) AT INLET OF FDC INLET

TITLE 19 ARTICLE 906 (A) A LABEL OF THE SELF- ADHESIVE TYPE SHALL BE PLACED ON THE FIRE DEPARTMENT CONNECTION OR ON THE RISER FOR FIRE SPRINKLER SYSTEMS WITH THE DATE OF SERVICE AND/OR DATE INSTALLATION WAS PERFORMED ND LICENSE NUMBER OF PERSON PERFORMING SERVICE WORK.

FIRE FLOW CALCULATIONS:

CODE REQUIREMENTS SITE FLOW:
BLDG. A CONSTRUCTION TYPE: II-B (WITH AUTOMATIC SPRINKLER SYSTEM)
FIRE FLOW CALCULATION AREA: 24,343 SF
2019 CFC FIRE FLOW(TABLE BB105.1) 17,209 GPM
2019 CFC MINIMUM FIRE FLOW: 2,750 GPM

BLDG B. CONSTRUCTION TYPE: V-B (WITH AUTOMATIC SPRINKLER SYSTEM)
FIRE FLOW CALCULATION AREA: 5,119 SF
2019 CFC FIRE FLOW(TABLE BB105.1) 17,250 GPM
2019 CFC MINIMUM FIRE FLOW: 2,000 GPM

AVAILABLE WATER SUPPLY:
MAY 5, 2022 CONTRA COSTA FIRE PROTECTION DISTRICT
STATIC PRESSURE: 68 PSI, SEE FP-1.1 FOR LOCATION
RESIDUAL PRESSURE: 66 PSI, SEE FP-1.1 FOR LOCATION
OBSERVED FLOW: 780 GPM
AVAILABLE FLOW: 4339 GPM @ 20 PSI RESIDUAL

SEISMIC BRACING:

SPECTRAL RESPONSE:
LATITUDE: 37.935932° W
LONGITUDE: 121.6940009° N
Ss = 1.37 (2016 ASCE 7 STANDARD)
SEE DESIGN CRITERIA ON STRUCTURAL DRAWING

SEISMIC COEFFICIENT:
Cp = 0.65 (2016 NFPA 13-TABLE 9.3.5.9.3)

USE Cp = 0.65 SEE DRAWINGS FP6.1, FP6.2 FOR SPECIFIC SEISMIC BRACING DETAILS AND FP6.3 FOR CALCULATIONS.

FIRE PROTECTION SCOPE OF WORK:

UNDERGROUND FIRE SPRINKLER MAIN FROM 5 FEET OUTSIDE BUILDING TO IN BUILDING RISERS AT BUILDINGS A AND B.

OVERHEAD FIRE SPRINKLER RISER AND OVERHEAD FIRE SPRINKLER SYSTEM THROUGHOUT BUILDINGS A AND B.

SYMBOL LEGEND

SYMBOL	ABBRV.	IDENTIFICATION
F	F	FIRE WATER
SPKR	SPKR	SPRINKLER
		PENDENT ON 401 EXTENSION
		RECESSED PENDENT
		UPRIGHT W/ 1" OUTLET BELOW
		UPRIGHT ON 1" SPRIG UP
		UPRIGHT ON BRANCH LINE
		UPRIGHT OVER PENDENT
		SIDEWALL
		GROOVED COUPLING
SB-X		EQ BRACE LOCATION
		4WAY EQ BRACE LOCATION
		HANGER LOCATION
		BRANCH LINE RESTRAINT
X		HYDRAULIC CALCULATION NODE
	CHVA	CHECK VALVE
		GATE VALVE
	T&PRV	TEMP & PRESS RELIEF VALVE
	DCDA	DOUBLE CHECK DETECTOR ASSEMBLY
		UNION
P		PRESSURE GAUGE
	FC	FLEXIBLE CONNECTION
	RPBP	REDUCE PRESS BACKFLOW PREVENTER
	FH	FIRE HYDRANT
	PIV	POST INDICATING VALVE
	FDC	FIRE DEPARTMENT CONNECTION
AD	AD	ACCESS DOOR
		BACK OF ELBOW
Ø	DIA	DIAMETER
	P.O.C.	POINT OF CONNECTION
℄		CENTERLINE

ABBREVIATIONS

&	AND
°F	DEGREES FAHRENHEIT
AC	AIR CONDITIONER
AFF	ABOVE FINISH FLOOR
AFUE	ANNUAL FUEL UTILIZATION EFFICIENCY
AL	ACOUSTICALLY LINED
AMP	AMPERE
APPROX	APPROXIMATE
ARCH	ARCHITECT/ARCHITECTURAL
BHP	BRAKE HORSEPOWER
BLDG	BUILDING
BTU	BRITISH THERMAL UNIT
BTUH	BRITISH THERMAL UNITS PER HOUR
CA	COMBUSTION AIR
CFH	CUBIC FEET PER HOUR
CFM	CUBIC FEET PER MINUTE
CIRC	CIRCULATING
CLG	CEILING
CONC	CONCRETE
CONN	CONNECTION
CONT	CONTINUED, CONTINUATION
COOL	COOLING
COP	COEFFICIENT OF PERFORMANCE
DB	DRY BULB
DF	DRINKING FOUNTAIN
D/L	DOOR LOUVER
DN	DOWN
DWGS	DRAWINGS
(E)	EXISTING
EA	EXHAUST AIR
EAT	ENTERING AIR TEMPERATURE
EER	ENERGY EFFICIENCY RATIO
ELEC	ELECTRICAL
ELEV	ELEVATION
EQUIP	EQUIPMENT
ESP	EXTERNAL STATIC PRESSURE
EWB	ENTERING WET BULB
EWT	ENTERING WATER TEMPERATURE
EXT	EXTERIOR
FD	FLOOR DRAIN
FFE	FINISHED FLOOR ELEVATION
FLA	FULL LOAD AMPS
FLEX	FLEXIBLE
FLR	FLOOR
FEET	PER MINUTE FPM
FS	FLOOR SINK
FT	FEET
FT HD	FEET HEAD
FPM	FEET PER MINUTE
FTR	FLUE THRU ROOF
GPM	GALLONS PER MINUTE
HP	HORSEPOWER
HR	HOUR
HTG	HEATING
HZ	HERTZ
IE	INVERT ELEVATION
IN	INCH
INV	INVERT
KW	KILOWATTS
LAT	LEAVING AIR TEMPERATURE
LBS	POUNDS
LWT	LEAVING WATER TEMPERATURE
LWB	LEAVING WET BULB
MAX	MAXIMUM
MBH	1000 BTU PER HOUR
MCA	MINIMUM CIRCUIT AMPS
MCP	MECHANICAL CONTROL PANEL
MECH	MECHANICAL
MFR	MANUFACTURER
MIN	MINIMUM
MOCP	MAXIMUM OVERCURRENT PROTECTION
(N)	NEW
NC	NORMALLY CLOSED
NIC	NOT IN CONTRACT
NO	NORMALLY OPEN
NTS	NOT TO SCALE
OA	OUTSIDE AIR
OC	ON CENTER
PD	PRESSURE DROP
PH	PHASE
PRV	PRESSURE REDUCING VALVE
PSI	POUNDS PER SQUARE INCH
P/T	PRESSURE/TEMPERATURE
QTY	QUANTITY
RA	RETURN AIR
RM	ROOM
RPM	REVOLUTIONS PER MINUTE
RV	RELIEF VALVE
SA	SUPPLY AIR
SC	SENSIBLE COOLING
SEER	SEASONAL ENERGY EFFICIENCY RATIO
SOV	SHUT-OFF VALVE
SP	STATIC PRESSURE
SPEC	SPECIFICATION
SQ	SQUARE
STRUCT	STRUCTURAL
TC	TOTAL COOLING
TDH	TOTAL DYNAMIC HEAD
TEMP	TEMPERATURE
TSP	TOTAL STATIC PRESSURE
TV	TURNING VANES
TYP	TYPICAL
UL	UNDERWRITER'S LABORATORIES
UON	UNLESS OTHERWISE NOTED
V	VOLT
VTR	VENT THROUGH ROOF
W/	WITH
WB	WET BULB
WC	WATER COLUMN
WH	WATER HEATER
WT	WEIGHT

LIST OF GOVERNING CODES

2019 BUILDING STANDARDS ADMINISTRATIVE CODE, PART 1, TITLE 24, C.C.R.
2019 CALIFORNIA BUILDING CODE (CBC), PART 2, TITLE 24, C.C.R.
2019 CALIFORNIA ELECTRICAL CODE, PART 3, TITLE 24, C.C.R.
2019 CALIFORNIA MECHANICAL CODE (CMC), PART 4, TITLE 24, C.C.R.
2019 CALIFORNIA PLUMBING CODE (CPC), PART 5, TITLE 24, C.C.R.
2019 CALIFORNIA ENERGY CODE (CEC), PART 6, TITLE 24, C.C.R.
2019 CALIFORNIA FIRE CODE (CFC), PART 9, TITLE 24, C.C.R.
2019 CALIFORNIA GREEN BUILDING STANDARDS CODE, PART 11, TITLE 24, C.C.R.
2019 CALIFORNIA REFERENCED STANDARDS CODE, PART 12, TITLE 24, C.C.R.
TITLE 19, C.C.R., PUBLIC SAFETY, STATE FIRE MARSHAL REGULATIONS.
2016 NFPA 13 AS AMENDED
2016 NFPA 24 AS AMENDED

ALL SECTION NUMBERS BELOW REFER TO GROUP 1, CHAPTER 4, PART 1, TITLE 24, C.C.R.
1. ADDENDA, CONSTRUCTION CHANGES PER SECTION 4-338.
2. INSPECTOR APPROVED BY DSA. INSPECTOR AND CONTINUOUS INSPECTION OF WORK PER SECTION 4-333(b) AND 4-342.
3. TESTS AND TESTING LABORATORY PER SECTION 4-335.
4. SPECIAL INSPECTION PER SECTION 4-333(c).
5. CONTRACTOR SHALL SUBMIT VERIFIED REPORTS PER SECTION 4-336 AND 4-343(c).
6. ADMINISTRATION OF CONSTRUCTION PER PART 1, TITLE 24, C.C.R. - DUTIES OF ARCHITECT, STRUCTURAL ENGINEER OR PROFESSIONAL ENGINEER PER SECTION 4-333(a) AND 4-341.
7. GOVERNING CODES: TITLE 24.
8. A COPY OF PARTS 1, 2, 3, 4, AND 5 OF TITLE 24 SHALL BE KEPT AVAILABLE IN THE FIELD DURING CONSTRUCTION.
9. DSA SHALL BE NOTIFIED OF START OF CONSTRUCTION PER SECTION 4-331.
10. SUPERVISION BY THE DIVISION OF THE STATE ARCHITECT PER SECTION 4-334.

IDENTIFICATION STAMP
DIV. OF THE STATE ARCHITECT
APP: 01-119994 INC:
REVIEWED FOR
SS ☑ FLS ☑ ACS ☑
DATE: 08/16/2022

QUATTROCCHI KWOK ARCHITECTS
Main:
636 Fifth Street, Santa Rosa, CA 95404
East Bay:
55 Harrison Street, Suite 525,
Oakland, CA 94607
(707) 576-0829

REGISTERED PROFESSIONAL ENGINEER
STEVEN E. RAWSON
No. M30657
EXP. JUNE 30, 2024
MECHANICAL
STATE OF CALIFORNIA

CEG JOB NO: 21125
CYPRESS Engineering Group
HVAC, Plumbing, Fire Protection
Building Commissioning
Industrial Refrigeration
Environmental Compliance
Training & Technical Support
831.218.1802
8 Harris Court, Suite A8
Monterey, CA 93940
cypresseg.com

LIBERTY HIGH SCHOOL

NEW CLASSROOM BUILDING

850 2ND STREET
BRENTWOOD, CA
94513

LIBERTY UNION HIGH SCHOOL DISTRICT

REVISIONS

DSA APP NO. 01-119994

ARCH PROJECT NO: 1925.00
DRAWN BY: SER
DRAWING SCALE: NONE
PTN: 61721-83 FILE NO: 7-H4

CONSTRUCTION DOCUMENTS
JUNE 24, 2022

SHEET TITLE
SYMBOL LEGENDS, ABBREVIATIONS, NOTES - FIRE PROTECTION

SHEET NUMBER
FP-0.1

GENERAL NOTES

1. UNDERGROUND FIRE SERVICE PIPING SHOWN ON DRAWING FP-1.1 TO SHOW HYDRAULIC NODE LOCATIONS REQUIRED FOR OVERHEAD SPRINKLER HYDRAULIC CALCULATION. DESIGN AND SPECIFICATION FOR NEW UNDERGROUND FIRE SERVICE PIPING IS BY CIVIL ENGINEER,SEE CIVIL DRAWINGS AND SPECIFICATION.

KEY NOTES

1. FIRE RISER WITH CONTROL VALVE AND FLOW SWITCH THAT REQUIRES MONITORING BY FIRE ALARM SYSTEM

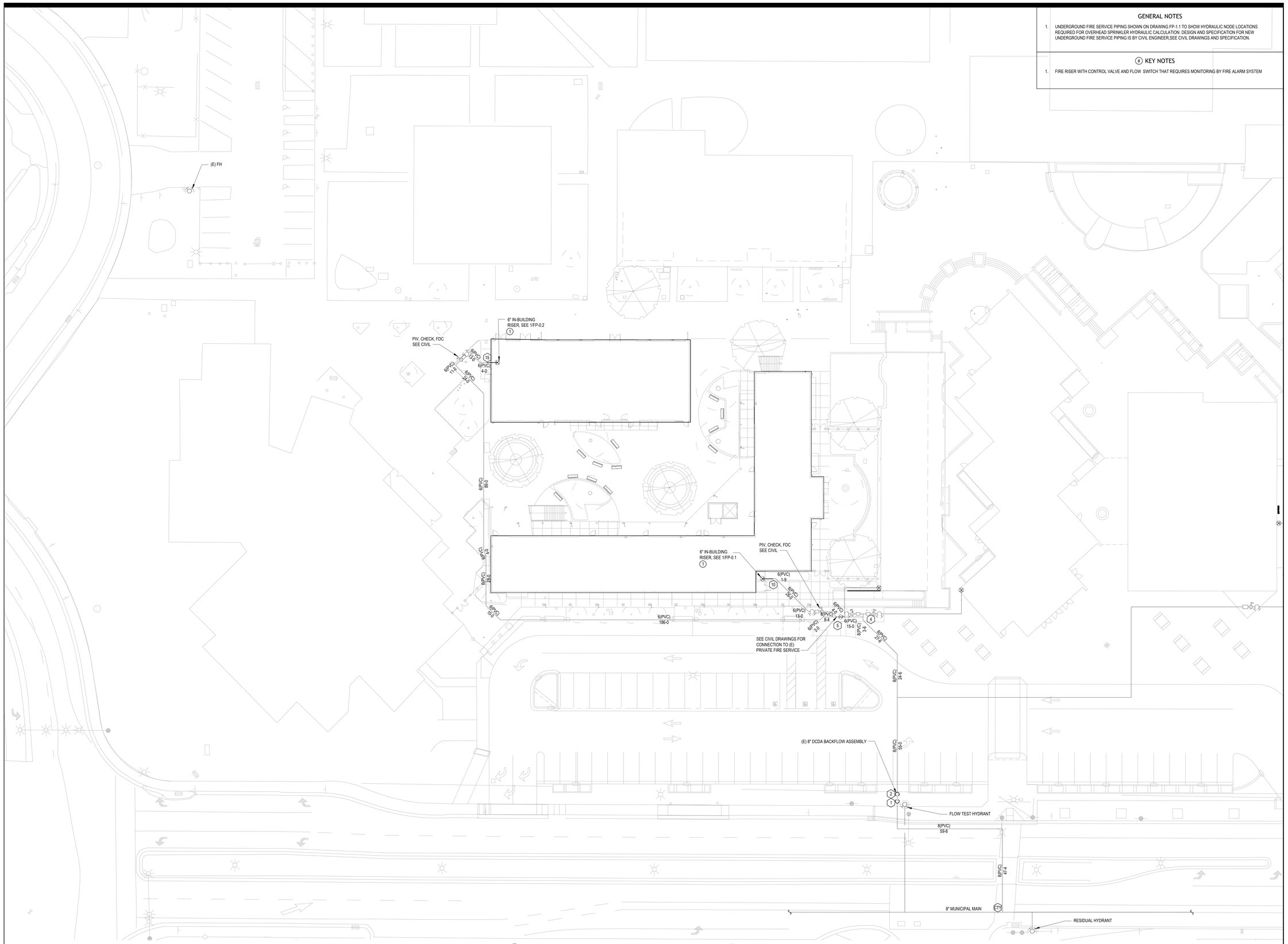

1 / FP-1.1 SITE PLAN - FIRE PROTECTION
SCALE: 1" = 20'-0"

NORTH

IDENTIFICATION STAMP
DIV. OF THE STATE ARCHITECT
APP: 01-119994 INC:
REVIEWED FOR
SS ☑ FLS ☑ ACS ☑
DATE: 08/16/2022

QUATTROCCHI KWOK ARCHITECTS
Main:
636 Fifth Street, Santa Rosa, CA 95404
East Bay:
55 Harrison Street, Suite 525,
Oakland, CA 94607
(707) 576-0829

REGISTERED PROFESSIONAL ENGINEER
STEVEN E. RAWSON
No. M 18653
EXP. JUNE 30, 2024
MECHANICAL
STATE OF CALIFORNIA

CEG JOB NO: 21125
CYPRESS Engineering Group
HVAC, Plumbing, Fire Protection
Building Automation Systems
Environmental Compliance
Industrial Refrigeration
Training & Technical Support
831.216.5902
8 Harris Court, Suite A8
Monterey, CA 93940
cypressegg.com

LIBERTY HIGH SCHOOL

NEW CLASSROOM BUILDING

850 2ND STREET
BRENTWOOD, CA
94513

LIBERTY UNION HIGH SCHOOL DISTRICT

REVISIONS

DSA APP NO. 01-119994

ARCH PROJECT NO:	1925.00
DRAWN BY:	SER
DRAWING SCALE:	1/8" = 1'-0"
PTN: 61721-83	FILE NO: 7-H4

CONSTRUCTION DOCUMENTS

JUNE 24, 2022

SHEET TITLE

SITE PLAN - FIRE PROTECTION

SHEET NUMBER

FP-1.1

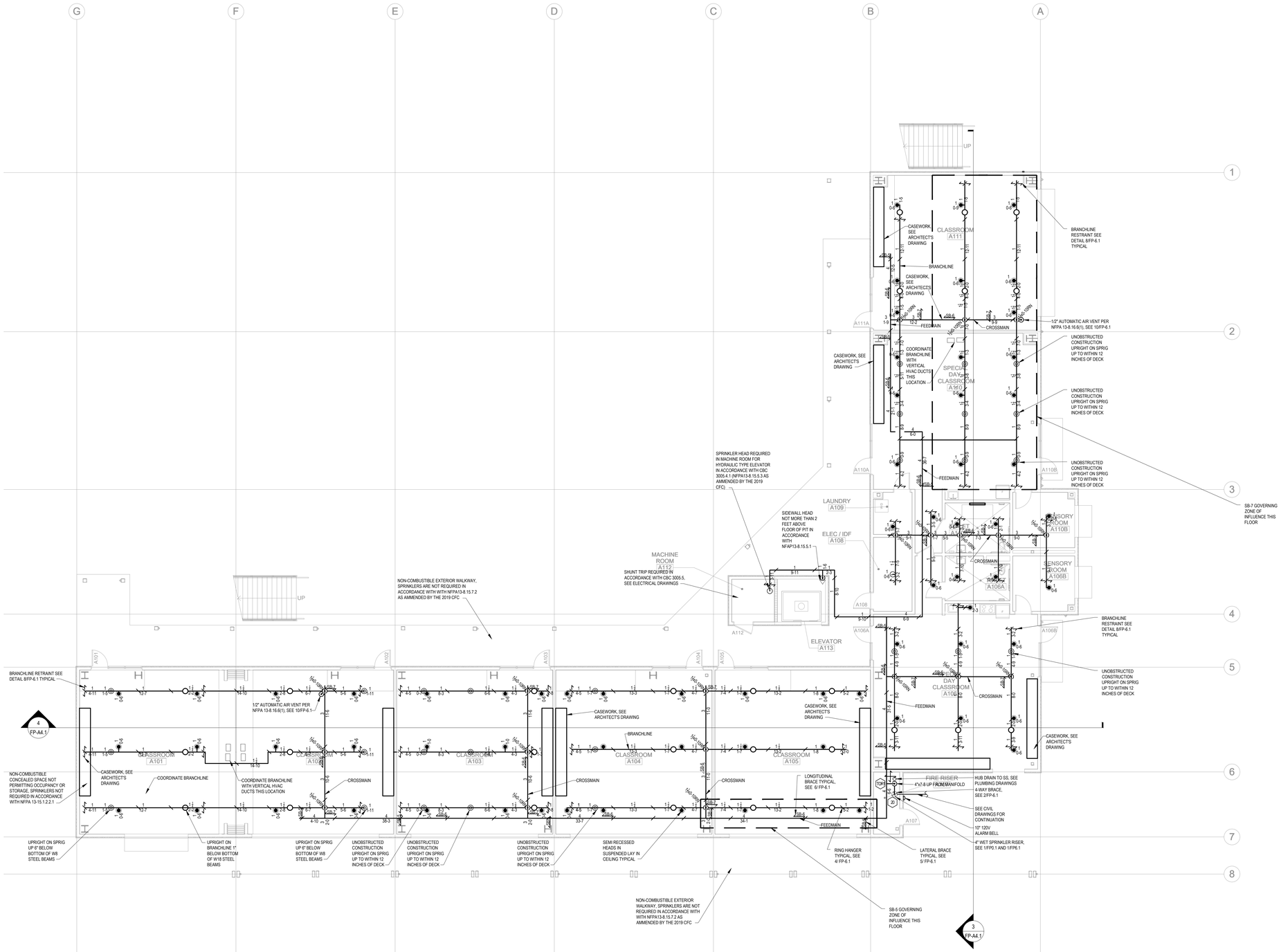

SPRINKLER									
SYMBOL	DESCRIPTION	MANF.	MODEL	SIN	TYPE	K FACTOR	TEMP RATING	QTY	NOTES
●	PENDENT	TYCO	TY-FRB	TY3231	SSP	5.6	200 °F	0	
◉	RECESSED PENDENT	TYCO	TY-FRB	TY3231	SSP	5.6	200 °F	71	1, 3, 4
○	UPRIGHT ON BRANCH LINE	TYCO	TY-FRB	TY3131	SSU	5.6	200 °F	2	
O	CONCEALED UPRIGHT	TYCO	TY-FRB	TY3131	SSU	5.6	200 °F	27	
◎	UPRIGHT SPRIG UP	TYCO	TY-FRB	TY3131	SSU	5.6	200 °F	27	
△	SIDEWALL	TYCO	TY-FRB	TY3331	SSS	5.6	200 °F	1	
✲	FLAT SPRAY UPRIGHT	TYCO	CC3	TY3199	FSU	5.6	200 °F	0	
TOTAL SPRINKLER (THIS SHEET)								128	
TOTAL SPRINKLERS BUILDING								255	

1. FINISH TO MATCH ADJACENT MATERIAL VERIFY WITH ARCHITECT
2. PROVIDE ON 401 EXTENSION
3. PROVIDE STYLE 10 RECESSED ESCUTCHEON. FINISH TO MATCH ADJACENT MATERIAL VERIFY WITH ARCHITECT
4. FOR LAY IN PANEL SUSPENDED CEILINGS PROVIDE 1" ANNULAR CLEARANCE AROUND RECESSED ESCUTCHEON. CONCEAL OVERSIZED HOLE WITH VIKING 1260 EXPANSION PLATE. FINISH TO MATCH ADJACENT MATERIAL VERIFY WITH ARCHITECT

1 FP-A2.1 BLDG A FIRST FLOOR PIPING PLAN - FIRE PROTECTION

SCALE: 1/8" = 1'-0"

NORTH

GENERAL NOTES

NOTES:

1. ALL DIMENSIONS ARE CENTERLINE TO CENTERLINE UNLESS OTHERWISE NOTED.
2. ALL PIPE 1-1/2" AND SMALLER SHALL BE SCHEDULE 40 BLACK STEEL WITH CAST IRON THREADED FITTINGS IN ACCORDANCE WITH ANSI B16.4.
3. ALL PIPE 2" AND GREATER SHALL BE SCHEDULE 10 BLACK WITH GROOVED COUPLINGS AND WELDED OUTLETS.
4. ALL PIPE 1-1/2" AND SMALLER SHALL HAVE SUPPORT SPACING LESS THAN 12 FEET.
5. ALL PIPE 2" AND GREATER SHALL HAVE SUPPORT SPACING LESS THAN 15 FEET.
6. BRANCH LINES SHALL BE RESTRAINED WITH NO. 12 440 LB WIRE AT THE END OF BRANCH LINE, AND AT INTERVALS NOT EXCEEDING 30 FT.
7. PROVIDE 1" ANNULAR CLEARANCE AT ALL SPRINKLER PENETRATIONS OF LAY IN PANEL SUSPENDED CEILINGS.

IDENTIFICATION STAMP
DIV. OF THE STATE ARCHITECT
APP: 01-119994 INC:
REVIEWED FOR
SS ☑ FLS ☑ ACS ☑
DATE: 08/16/2022

QUATTROCCHI KWOK ARCHITECTS
Main:
636 Fifth Street, Santa Rosa, CA 95404
East Bay:
55 Harrison Street, Suite 525,
Oakland, CA 94607
(707) 576-0829

REGISTERED PROFESSIONAL ENGINEER
STEVEN E. RAWLINGS
No. M 18653
EXP. JUNE 30, 2024
MECHANICAL
STATE OF CALIFORNIA

CEG JOB NO: 21125
CYPRESS Engineering Group
HVAC, Plumbing, Fire Protection
Building Automation Controls
Industrial Refrigeration
Environmental Compliance
Training & Technical Support
831.216.1902
8 Harris Court, Suite A8
Monterey, CA 93940
cypressegg.com

LIBERTY HIGH SCHOOL

NEW CLASSROOM BUILDING

850 2ND STREET
BRENTWOOD, CA
94513

LIBERTY UNION HIGH SCHOOL DISTRICT

REVISIONS

DSA APP NO. 01-119994

ARCH PROJECT NO:	1925.00
DRAWN BY:	SER
DRAWING SCALE:	1/8" = 1'-0"
PTN: 61721-83	FILE NO: 7-H4

CONSTRUCTION DOCUMENTS

JUNE 24, 2022

SHEET TITLE

BLDG A FIRST FLOOR PIPING PLAN - FIRE PROTECTION

SHEET NUMBER

FP-A2.1

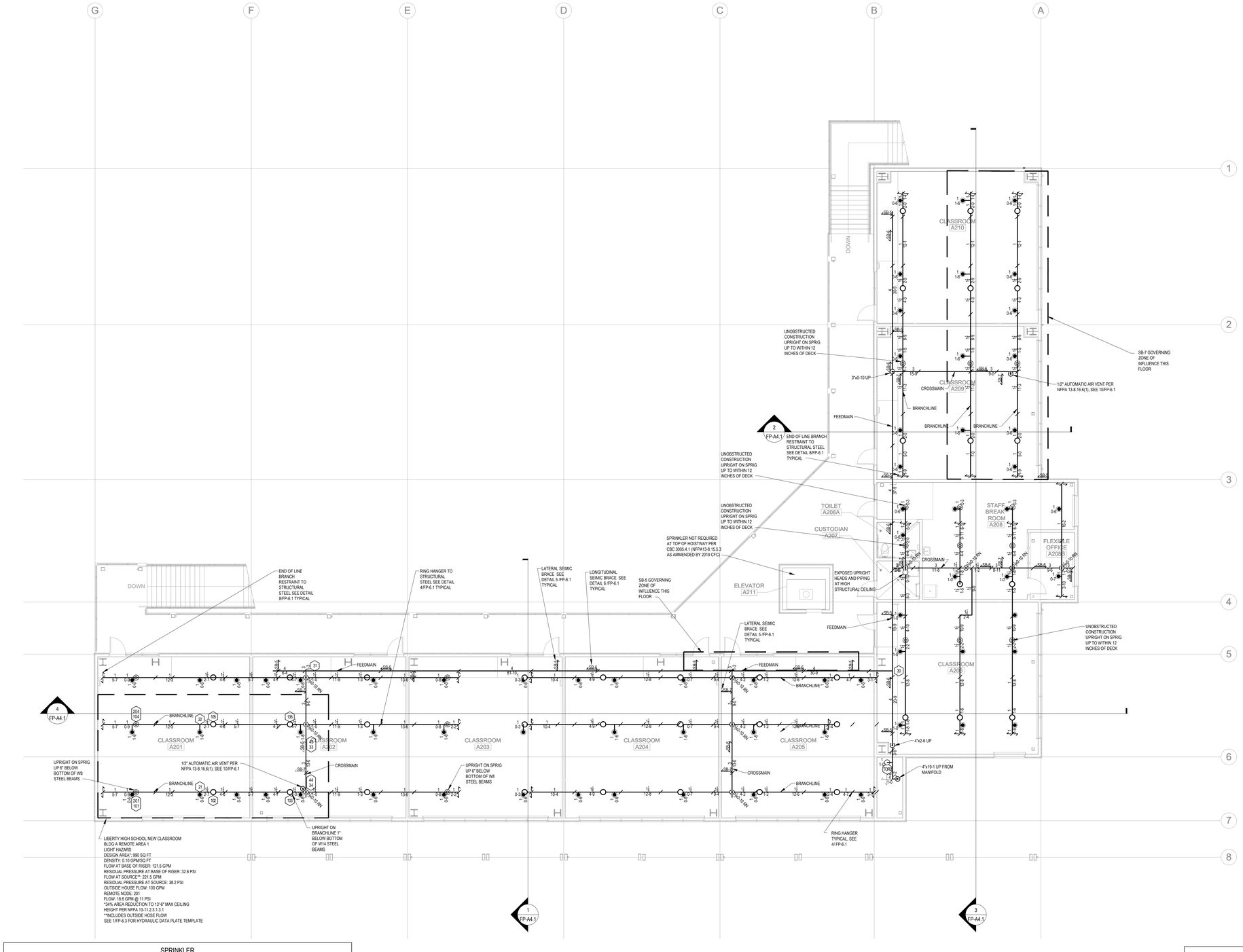

1 FP-A2.2 BLDG A SECOND FLOOR PIPING PLAN - FIRE PROTECTION

SCALE: 1/8" = 1'-0"

NORTH

SPRINKLER									
SYMBOL	DESCRIPTION	MANF.	MODEL	SIN	TYPE	K FACTOR	TEMP RATING	QTY	NOTES
●	PENDENT	TYCO	TY-FRB	TY3231	SSP	5.6	200 °F	0	
◉	RECESSED PENDENT	TYCO	TY-FRB	TY3231	SSP	5.6	200 °F	70	1, 3, 4
○	UPRIGHT ON BRANCH LINE	TYCO	TY-FRB	TY3131	SSU	5.6	200 °F	1	
○	CONCEALED UPRIGHT	TYCO	TY-FRB	TY3131	SSU	5.6	200 °F	38	
◎	UPRIGHT SPRIG UP	TYCO	TY-FRB	TY3131	SSU	5.6	200 °F	18	
✧	FLAT SPRAY UPRIGHT	TYCO	CC3	TY3199	FSU	5.6	200 °F	0	
TOTAL SPRINKLER (THIS SHEET)								127	
TOTAL SPRINKLERS BUILDING								255	

1. FINISH TO MATCH ADJACENT MATERIAL VERIFY WITH ARCHITECT
2. PROVIDE ON 401 EXTENSION
3. PROVIDE STYLE 10 RECESSED ESCUTCHEON. FINISH TO MATCH ADJACENT MATERIAL VERIFY WITH ARCHITECT
4. FOR LAY IN PANEL SUSPENDED CEILINGS PROVIDE 1" ANNULAR CLEARANCE AROUND RECESSED ESCUTCHEON. CONCEAL OVERSIZED HOLE WITH VIKING 1260 EXPANSION PLATE. FINISH TO MATCH ADJACENT MATERIAL VERIFY WITH ARCHITECT

GENERAL NOTES

NOTES:

1. ALL DIMENSIONS ARE CENTERLINE TO CENTERLINE UNLESS OTHERWISE NOTED.
2. ALL PIPE 1-1/2" AND SMALLER SHALL BE SCHEDULE 40 BLACK STEEL WITH CAST IRON THREADED FITTINGS IN ACCORDANCE WITH ANSI B16.4.
3. ALL PIPE 2" AND GREATER SHALL BE SCHEDULE 10 BLACK WITH GROOVED COUPLINGS AND WELDED OUTLETS.
4. ALL PIPE 1-1/2" AND SMALLER SHALL HAVE SUPPORT SPACING LESS THAN 12 FEET.
5. ALL PIPE 2" AND GREATER SHALL HAVE SUPPORT SPACING LESS THAN 15 FEET.
6. BRANCH LINES SHALL BE RESTRAINED WITH NO. 12 440 LB WIRE AT THE END OF BRANCH LINE, AND AT INTERVALS NOT EXCEEDING 30 FT.
7. PROVIDE 1" ANNULAR CLEARANCE AT ALL SPRINKLER PENETRATIONS OF LAY IN PANEL SUSPENDED CEILINGS.

IDENTIFICATION STAMP
DIV. OF THE STATE ARCHITECT
APP: 01-119994 INC:
REVIEWED FOR
SS ☑ FLS ☑ ACS ☑
DATE: 08/16/2022

QUATTROCCHI KWOK ARCHITECTS
Main:
636 Fifth Street, Santa Rosa, CA 95404
East Bay:
55 Harrison Street, Suite 525,
Oakland, CA 94607
(707) 576-0829

REGISTERED PROFESSIONAL ENGINEER
STEVEN R. WEBB
No. M 18652
EXP. JUNE 30, 2024
MECHANICAL
STATE OF CALIFORNIA

CEG JOB NO: 21125
CYPRESS Engineering Group
HVAC, Plumbing, Fire Protection
Building Automation Systems
Industrial Refrigeration
Environmental Compliance
Training & Technical Support
831 216 5902
8 Harris Court, Suite A8
Monterey, CA 93940
cypressegg.com

LIBERTY HIGH SCHOOL

NEW CLASSROOM BUILDING

850 2ND STREET
BRENTWOOD, CA
94513

LIBERTY UNION HIGH SCHOOL DISTRICT

REVISIONS

DSA APP NO. 01-119994

ARCH PROJECT NO:	1925.00
DRAWN BY:	SER
DRAWING SCALE:	1/8" = 1'-0"
PTN: 61721-83	FILE NO: 7-H4

CONSTRUCTION DOCUMENTS

JUNE 24, 2022

SHEET TITLE

BLDG A SECOND FLOOR PIPING PLAN - FIRE PROTECTION

SHEET NUMBER

FP-A2.2

1 FP-A3.1 BLDG A FIRST FLOOR CEILING PLAN - FIRE PROTECTION

SCALE: 1/8" = 1'-0"

NORTH

IDENTIFICATION STAMP
DIV. OF THE STATE ARCHITECT
APP: 01-119994 INC:
REVIEWED FOR
SS ☑ FLS ☑ ACS ☑
DATE: 08/16/2022

QUATTROCCHI KWOK ARCHITECTS

Main:
636 Fifth Street, Santa Rosa, CA 95404
East Bay:
55 Harrison Street, Suite 525,
Oakland, CA 94607
(707) 576-0829

REGISTERED PROFESSIONAL ENGINEER
STEVEN RAY WEBB
No. M 18652
EXP: JUNE 30, 2024
MECHANICAL
STATE OF CALIFORNIA

CEG JOB NO: 21125

CYPRESS Engineering Group

HVAC, Plumbing, Fire Protection
Building Commissioning
Industrial Refrigeration
Environmental Compliance
Training & Technical Support

831.216.1902
8 Harris Court, Suite A8
Monterey, CA 93940
cypressegg.com

LIBERTY HIGH SCHOOL

NEW CLASSROOM BUILDING

850 2ND STREET
BRENTWOOD, CA
94513

LIBERTY UNION HIGH SCHOOL DISTRICT

REVISIONS

DSA APP NO. 01-119994

ARCH PROJECT NO: 1925.00
DRAWN BY: SER
DRAWING SCALE: 1/8" = 1'-0"
PTN: 61721-83 FILE NO: 7-H4

CONSTRUCTION DOCUMENTS

JUNE 24, 2022

SHEET TITLE

BLDG A FIRST FLOOR CEILING PLAN - FIRE PROTECTION

SHEET NUMBER

FP-A3.1

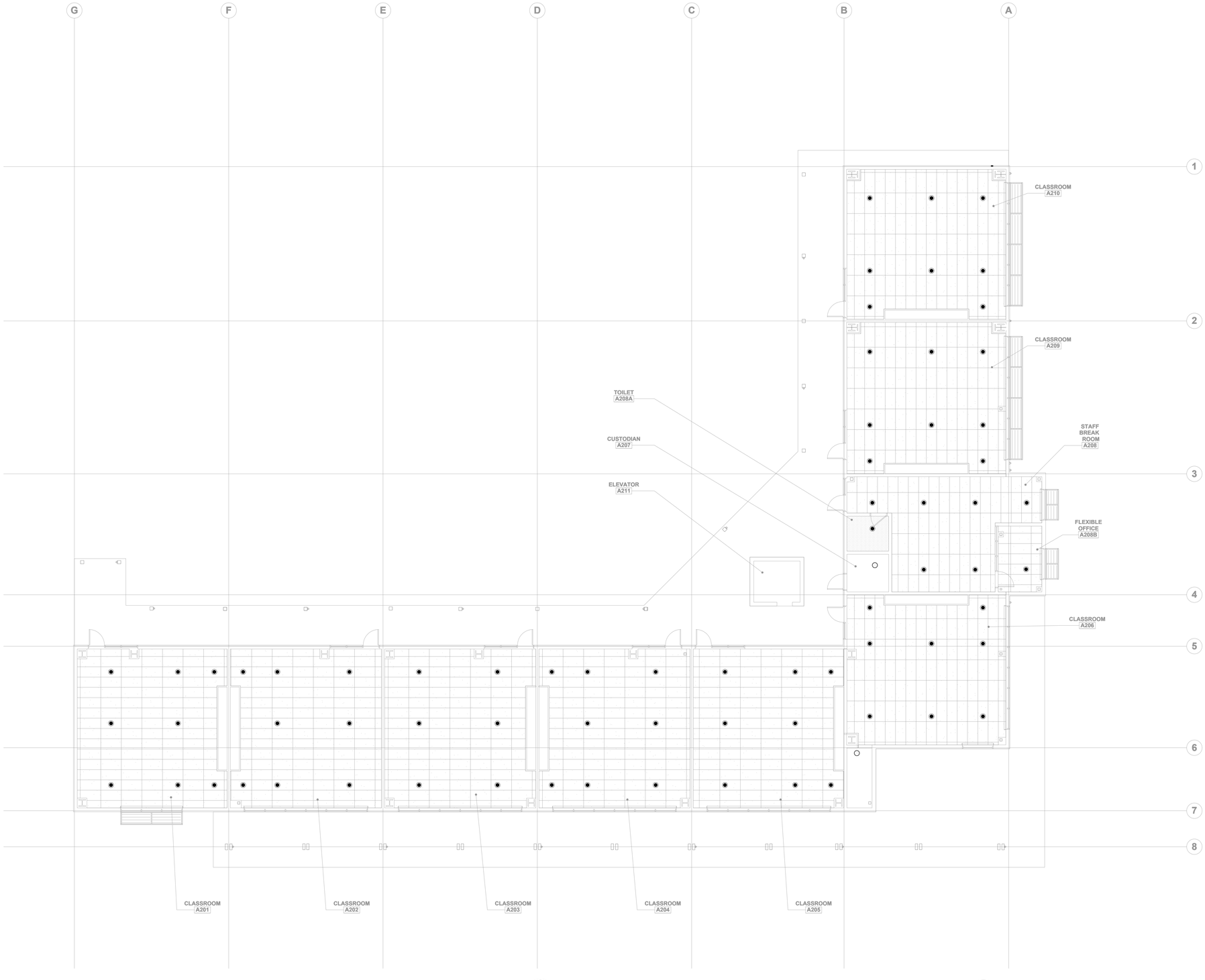

1 FP-A3.2 BLDG A SECOND FLOOR CEILING PLAN - FIRE PROTECTION

SCALE: 1/8" = 1'-0"

NORTH

IDENTIFICATION STAMP
DIV. OF THE STATE ARCHITECT
APP: 01-119994 INC:
REVIEWED FOR
SS ☑ FLS ☑ ACS ☑
DATE: 08/16/2022

QUATTROCCHI KWOK ARCHITECTS
Main:
636 Fifth Street, Santa Rosa, CA 95404
East Bay:
55 Harrison Street, Suite 525,
Oakland, CA 94607
(707) 576-0829

REGISTERED PROFESSIONAL ENGINEER
STEVEN E. RAWSON
No. 1[illegible]
EXP. JUNE 30, 2024
MECHANICAL
STATE OF CALIFORNIA

CEG JOB NO: 21125
CYPRESS Engineering Group
HVAC, Plumbing, Fire Protection
Building Commissioning
Industrial Refrigeration
Environmental Compliance
Training & Technical Support
831.218.1802
8 Harris Court, Suite A8
Monterey, CA 93940
cypresseg.com

LIBERTY HIGH SCHOOL

NEW CLASSROOM BUILDING

850 2ND STREET
BRENTWOOD, CA
94513

LIBERTY UNION HIGH SCHOOL DISTRICT

REVISIONS

DSA APP NO. 01-119994

ARCH PROJECT NO:	1925.00
DRAWN BY:	SER
DRAWING SCALE:	1/8" = 1'-0"
PTN: 61721-83	FILE NO: 7-H4

CONSTRUCTION DOCUMENTS

JUNE 24, 2022

SHEET TITLE

BLDG A SECOND FLOOR CEILING PLAN - FIRE PROTECTION

SHEET NUMBER

FP-A3.2

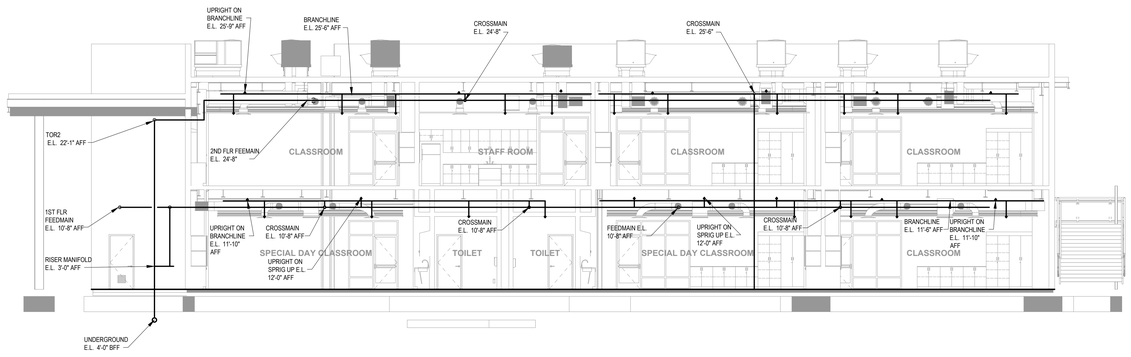

3 / FP-A4.1 SECTION THROUGH SOUTH WING - FIRE PROTECTION

SCALE: 1/8" = 1'-0"

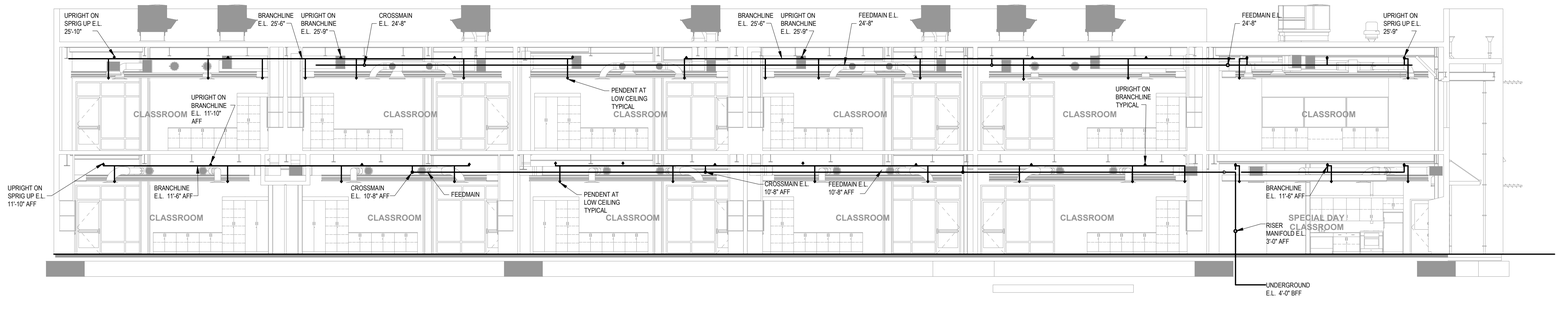

4 / FP-A4.1 SECTION THROUGH WEST WING - FIRE PROTECTION

SCALE: 1/8" = 1'-0"

IDENTIFICATION STAMP
DIV. OF THE STATE ARCHITECT
APP: 01-119994 INC:
REVIEWED FOR
SS ☑ FLS ☑ ACS ☑
DATE: 08/16/2022

QUATTROCCHI KWOK ARCHITECTS
Main:
636 Fifth Street, Santa Rosa, CA 95404
East Bay:
55 Harrison Street, Suite 525,
Oakland, CA 94607
(707) 576-0829

REGISTERED PROFESSIONAL ENGINEER
STEVEN E. RAWSON
No. M 18653
EXP. JUNE 30, 2024
MECHANICAL
STATE OF CALIFORNIA

CEG JOB NO: 21125
CYPRESS Engineering Group
HVAC, Plumbing, Fire Protection
Building Commissioning
Industrial Refrigeration
Environmental Compliance
Training & Technical Support
831 216 5902
8 Harris Court, Suite A8
Monterey, CA 93940
cypressegg.com

LIBERTY HIGH SCHOOL

NEW CLASSROOM BUILDING

850 2ND STREET
BRENTWOOD, CA
94513

LIBERTY UNION HIGH SCHOOL DISTRICT

REVISIONS

DSA APP NO. 01-119994

ARCH PROJECT NO:	1925.00
DRAWN BY:	SER
DRAWING SCALE:	1/8" = 1'-0"
PTN: 61721-83	FILE NO: 7-H4

CONSTRUCTION DOCUMENTS

JUNE 24, 2022

SHEET TITLE

BLDG A
SECTIONS - FIRE PROTECTION

SHEET NUMBER

FP-A4.1

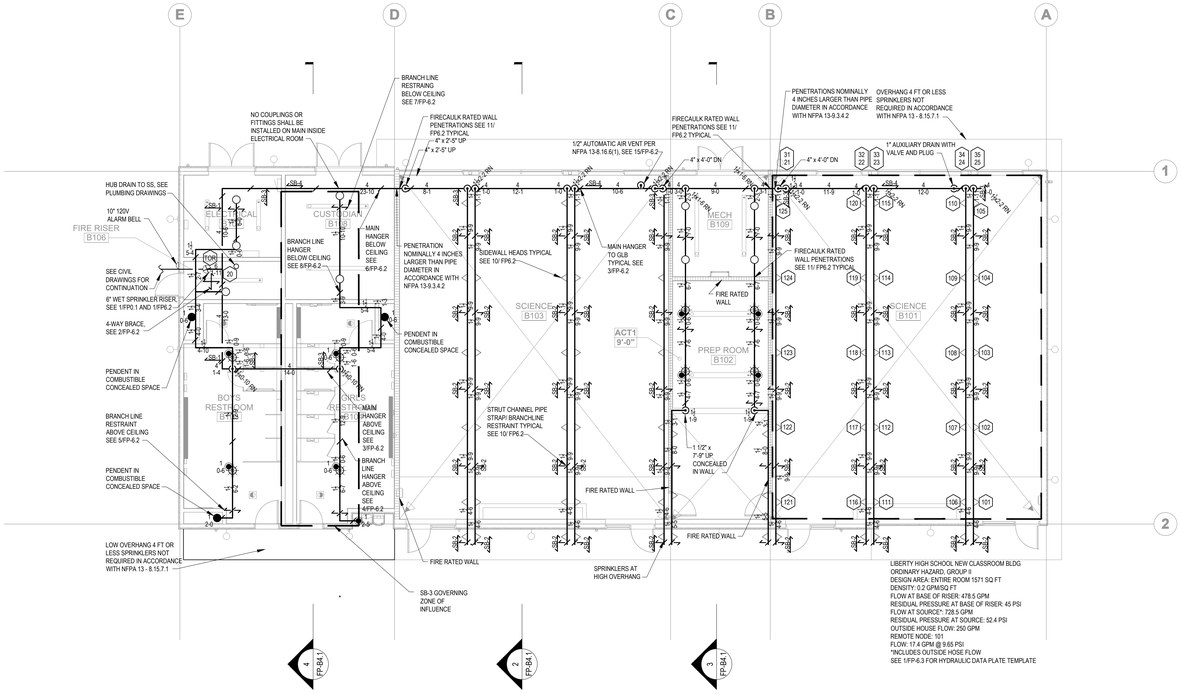

1 FP-B2.1 **BLDG B PIPING PLAN - FIRE PROTECTION**

SCALE: 1/8" = 1'-0"

NORTH

GENERAL NOTES

NOTES:

1. ALL DIMENSIONS ARE CENTERLINE TO CENTERLINE UNLESS OTHERWISE NOTED.
2. ALL PIPE 1-1/2" AND SMALLER SHALL BE SCHEDULE 40 BLACK STEEL WITH CAST IRON THREADED FITTINGS IN ACCORDANCE WITH ANSI B16.4.
3. ALL PIPE 2" AND GREATER SHALL BE SCHEDULE 10 BLACK WITH GROOVED COUPLINGS AND WELDED OUTLETS.
4. ALL PIPE 1-1/2" AND SMALLER SHALL HAVE SUPPORT SPACING LESS THAN 12 FEET.
5. ALL PIPE 2" AND GREATER SHALL HAVE SUPPORT SPACING LESS THAN 15 FEET.
6. BRANCH LINES SHALL BE RESTRAINED WITH NO. 12 440 LB WIRE AT THE END OF BRANCH LINE, AND AT INTERVALS NOT EXCEEDING 30 FT.
7. PROVIDE 1" ANNULAR CLEARANCE AT ALL SPRINKLER PENETRATIONS OF LAY IN PANEL SUSPENDED CEILINGS.

SPRINKLER

SYMBOL	DESCRIPTION	MANF.	MODEL	SIN	TYPE	K FACTOR	TEMP RATING	QTY	NOTES
●	PENDENT	TYCO	TY-FRB	TY3231	SSP	5.6	200 °F	3	
◉	RECESSED PENDENT	TYCO	TY-FRB	TY3231	SSP	5.6	200 °F	9	1, 3, 4
○	UPRIGHT ON BRANCH LINE	TYCO	TY-FRB	TY3131	SSU	5.6	200 °F	9	
○	CONCEALED UPRIGHT	TYCO	TY-FRB	TY3131	SSU	5.6	200 °F	0	
◎	UPRIGHT SPRIG UP	TYCO	TY-FRB	TY3131	SSU	SSU	200 °F	0	
△	SIDEWALL	TYCO	TY-FRB	TY3331	SSS	SSU	200 °F	66	
✲	FLAT SPRAY UPRIGHT	TYCO	CC3	TY3199	FSU	5.6	200 °F	8	
TOTAL SPRINKLER (THIS SHEET)								87	
TOTAL SPRINKLERS BUILDING								87	

1. FINISH TO MATCH ADJACENT MATERIAL VERIFY WITH ARCHITECT
2. PROVIDE ON 401 EXTENSION
3. PROVIDE STYLE 10 RECESSED ESCUTCHEON. FINISH TO MATCH ADJACENT MATERIAL VERIFY WITH ARCHITECT
4. FOR LAY IN PANEL SUSPENDED CEILINGS PROVIDE 1" ANNULAR CLEARANCE AROUND RECESSED ESCUTCHEON. CONCEAL OVERSIZED HOLE WITH VIKING 1260 EXPANSION PLATE. FINISH TO MATCH ADJACENT MATERIAL VERIFY WITH ARCHITECT

IDENTIFICATION STAMP
DIV. OF THE STATE ARCHITECT
APP: 01-119994 INC:
REVIEWED FOR
SS ☑ FLS ☑ ACS ☑
DATE: 08/16/2022

QUATTROCCHI KWOK ARCHITECTS
Main:
636 Fifth Street, Santa Rosa, CA 95404
East Bay:
55 Harrison Street, Suite 525,
Oakland, CA 94607
(707) 576-0829

REGISTERED PROFESSIONAL ENGINEER
STEVEN E. RAWLINGS
No. M 18652
EXP. JUNE 30, 2024
MECHANICAL
STATE OF CALIFORNIA

CEG JOB NO: 21125
CYPRESS Engineering Group
HVAC, Plumbing, Fire Protection
Building Automation Systems
Industrial Refrigeration
Environmental Compliance
Training & Technical Support
831 216 5902
8 Harris Court, Suite A8
Monterey, CA 93940
cypressengr.com

LIBERTY HIGH SCHOOL

NEW CLASSROOM BUILDING

850 2ND STREET
BRENTWOOD, CA
94513

LIBERTY UNION HIGH SCHOOL DISTRICT

REVISIONS

DSA APP NO. 01-119994

ARCH PROJECT NO: 1925.00
DRAWN BY: SER
DRAWING SCALE: 1/8" = 1'-0"
PTN. 61721-83 FILE NO. 7-H4

CONSTRUCTION DOCUMENTS

JUNE 24, 2022

SHEET TITLE

BLDG B PIPING PLAN - FIRE PROTECTION

SHEET NUMBER

FP-B2.1

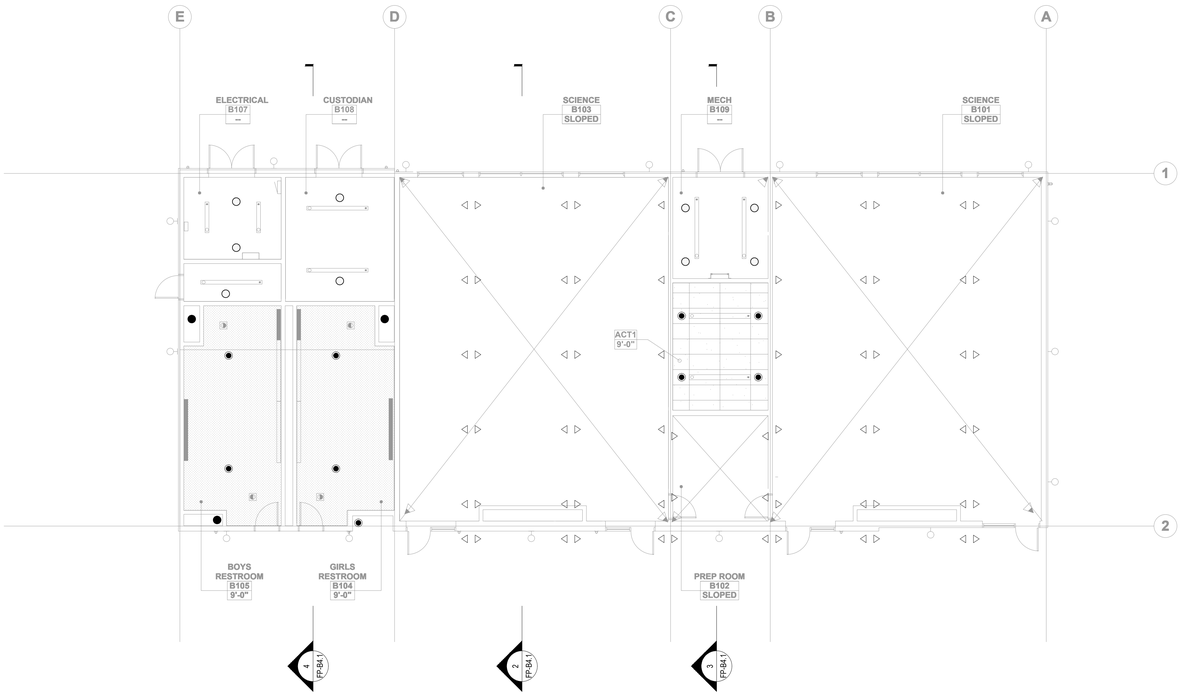

1
FP-B3.1
BLDG B CEILING PLAN - FIRE PROTECTION
SCALE: 1/8" = 1'-0"
NORTH

IDENTIFICATION STAMP
DIV. OF THE STATE ARCHITECT
APP: 01-119994 INC:
REVIEWED FOR
SS ☑ FLS ☑ ACS ☑
DATE: 08/16/2022

QUATTROCCHI KWOK
ARCHITECTS
Main:
636 Fifth Street, Santa Rosa, CA 95404
East Bay:
55 Harrison Street, Suite 525,
Oakland, CA 94607
(707) 576-0829

REGISTERED PROFESSIONAL ENGINEER
STEVEN E. RAWSON
No. 1 MECH
EXP. JUNE 30, 2024
MECHANICAL
STATE OF CALIFORNIA

CEG JOB NO: 21125
CYPRESS
Engineering Group
HVAC, Plumbing, Fire Protection
Building Commissioning
Industrial Refrigeration
Environmental Compliance
Training & Technical Support
831.218.1802
8 Harris Court, Suite A8
Monterey, CA 93940
cypressegi.com

LIBERTY HIGH SCHOOL

NEW CLASSROOM BUILDING

850 2ND STREET
BRENTWOOD, CA
94513

LIBERTY UNION
HIGH SCHOOL
DISTRICT

REVISIONS

DSA APP NO. 01-119994

ARCH PROJECT NO:	1925.00
DRAWN BY:	SER
DRAWING SCALE:	1/8" = 1'-0"
PTN: 61721-83	FILE NO: 7-H4

CONSTRUCTION DOCUMENTS

JUNE 24, 2022

SHEET TITLE

BLDG B CEILING PLAN - FIRE PROTECTION

SHEET NUMBER

FP-B3.1

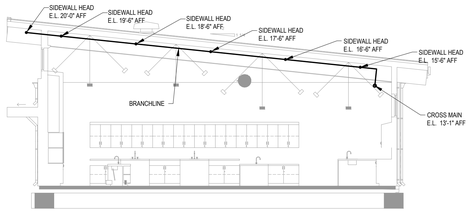

2 FP-B4.1 SECTION THROUGH SCIENCE LAB - FIRE PROTECTION

SCALE: 1/8" = 1'-0"

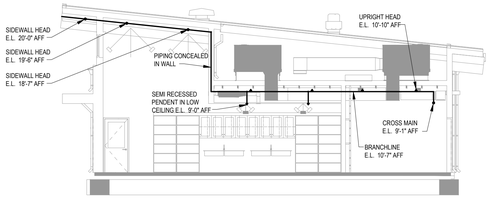

3 FP-B4.1 SECTION THROUGH PREP ROOM/MECH WELL - FIRE PROTECTION

SCALE: 1/8" = 1'-0"

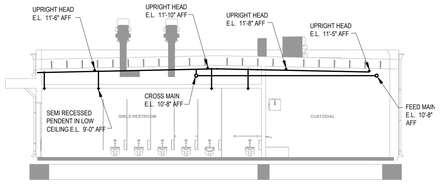

4 FP-B4.1 SECTION THROUGH RESTROOMS - FIRE PROTECTION

SCALE: 1/8" = 1'-0"

IDENTIFICATION STAMP
DIV. OF THE STATE ARCHITECT
APP: 01-119994 INC:
REVIEWED FOR
SS ☑ FLS ☑ ACS ☑
DATE: 08/16/2022

QUATTROCCHI KWOK
ARCHITECTS
Main:
636 Fifth Street, Santa Rosa, CA 95404
East Bay:
55 Harrison Street, Suite 525,
Oakland, CA 94607
(707) 576-0829

REGISTERED PROFESSIONAL ENGINEER
STEVEN R. RAWSON
No. M 18653
EXP: JUNE 30, 2024
MECHANICAL
STATE OF CALIFORNIA

CEG JOB NO: 21125
CYPRESS Engineering Group
HVAC, Plumbing, Fire Protection
Building Commissioning
Industrial Refrigeration
Environmental Compliance
Training & Contract Support
831 216 5902
8 Harris Court, Suite A8
Monterey, CA 93940
cypressegg.com

LIBERTY HIGH SCHOOL

NEW CLASSROOM BUILDING

850 2ND STREET
BRENTWOOD, CA
94513

LIBERTY UNION
HIGH SCHOOL
DISTRICT

REVISIONS

DSA APP NO. 01-119994

ARCH PROJECT NO:	1925.00
DRAWN BY:	SER
DRAWING SCALE:	1/8" = 1'-0"
PTN. 61721-83	FILE NO. 7-H4

CONSTRUCTION DOCUMENTS

JUNE 24, 2022

SHEET TITLE

BLDG B
SECTIONS - FIRE
PROTECTION

SHEET NUMBER

FP-B4.1

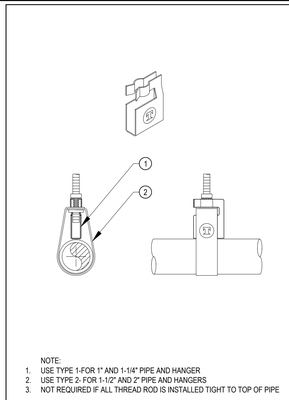

DETAIL NOTES:

1. TOLCO FIG. 25 SURGE RESTRAINT
2. TOLCO FIG. 200 ADJUSTABLE RING HANGER

NOTE:
1. USE TYPE 1-FOR 1" AND 1-1/4" PIPE AND HANGER
2. USE TYPE 2- FOR 1-1/2" AND 2" PIPE AND HANGERS
3. NOT REQUIRED IF ALL THREAD ROD IS INSTALLED TIGHT TO TOP OF PIPE

9 SURGE RESTRAINT N.T.S.

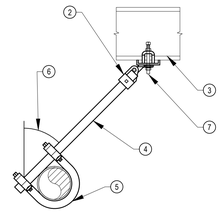

DETAIL NOTES:

1. TOLCO FIG 800 SWAY BRACE ATTACHMENT TO STEEL I-BEAM
2. TOLCO FIG. 909 NO-TREAD SWIVEL SWAY BRACE ATTACHMENT, FOR BRACE LENGTH OVER 7 FT USE TOLCO FIG 980.
3. STEEL BEAM, SEE STRUCTURAL DRAWINGS
4. 1" SCH. 40 BRACE PIPE MAXIMUM BRACE LENGTH IS 7 FEET IN ACCORDANCE WITH NPFA13-TABLE 9.3.5.11.8 (d). USE 2" SCHEDULE 40 PIPE FOR BRACES OVER 7 FEET UPTO A MAXIMUM OF 13 FEET.
5. TOLCO FIG. 1001 SWAY BRACE ATTACHMENT, FOR BRACE LENGHTH OVER 7 FEET USE TOLCO FIG. 2002.
6. 60°-90°
7. STANDARD 1/2" THROUGH BOLT ATTACHMENT FOR SWAY BRACE SWIVEL

5 LATERAL SEISMIC BRACE SB-5, SB-7 N.T.S.

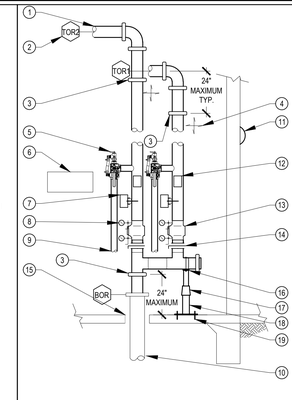

DETAIL NOTES:

1. 4" TO SYSTEM, SEE FP-A2.1 AND FP-A2.2
2. HYDRAULIC CALCULATION NODE, TYP
3. UL LISTED GRINNNELL G-FIRE FIGURE 705 FLEXIBLE COUPLING
4. 4-WAY BRACE, SEE 2/FP-6.1
5. 2" TESTANDRAIN MODEL 1011A WITH MODEL 7000 PRESSURE RELIEVE VALVE SET AT 175 PSI
6. SPARE HEAD CABINET
7. FLOW SWITCH
8. PRESSURE GAGE, TYP
9. DAYLIGHT OVER HUB DRAIN, SEE PLUMBING DRAWINGS.
10. SEE 1/FP0.1 FOR UNDERGROUND RISER, SEE FP1.1 FOR IN-BUILDING
11. 10" 120V ALARM BELL
12. HYDRAULIC DATA PLATE
13. TYCO CV-1FR UL LISTED CHECK VALVE
14. BUTTERFLY INDICATING VALVE WITH TAMPER SWITCH
15. FILL ANNULAR CLEARANCE WITH FLEXIBLE FIRE CAULK, SEE 1/ FP0.1
16. BLINE B3097 SADDLE WITH STRAP
17. BLINE B3089 PIPE ADJUSTER
18. BLINE B3088T THREADED BASE STAND WITH 1/2 x 13 1/2 SQ.BASEPLATE
19. 1/2" HILTI KB-TZ WITH 2" EMBEDMENT (ICC ESR-1917)

1 BUILDING A WET RISER N.T.S.

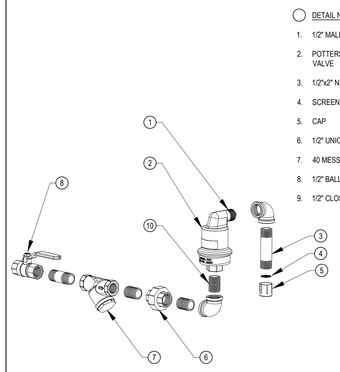

DETAIL NOTES:

1. 1/2" MALE NPT DRAIN CONNECTION
2. POTTERS PAY 175 PSI AIR VENT VALVE
3. 1/2"x2" NIPPLE
4. SCREEN
5. CAP
6. 1/2" UNION CONNECTION
7. 40 MESS STRAINER
8. 1/2" BALL VALVE
9. 1/2" CLOSE NIPPLE, TYP

NOTE: CLOSE VALVE AND CAP AFTER SYSTEM PURGING IS COMPLETE

10 AIR VENT N.T.S.

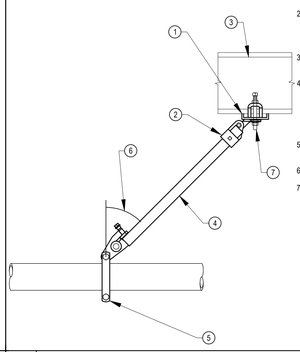

DETAIL NOTES:

1. TOLCO FIG 800 SWAY BRACE ATTACHMENT TO STEEL I-BEAM
2. TOLCO FIG. 909 NO-TREAD SWIVEL SWAY BRACE ATTACHMENT, FOR BRACE LENGTH OVER 7 FT USE TOLCO FIG 980.
3. STEEL BEAM, SEE STRUCTURAL DRAWINGS
4. 1" SCH. 40 BRACE PIPE MAXIMUM BRACE LENGTH IS 7 FEET IN ACCORDANCE WITH NPFA13-TABLE 9.3.5.11.8 (d). USE 2" SCHEDULE 40 PIPE FOR BRACES OVER 7 FEET UPTO A MAXIMUM OF 13 FEET
5. FIG. 4L LONGITUDINAL IN-LINE SWAY BRACE
6. 60°-90°
7. STANDARD 1/2" THROUGH BOLT ATTACHMENT FOR SWAY BRACE SWIVEL

6 LONGITUDINAL SEISMIC BRACE SB-6 N.T.S.

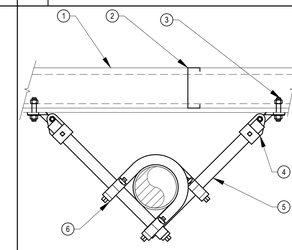

PLAN VIEW

DETAIL NOTES:

1. BLOCKING IN WALL, SEE 11/ FP-6.1
2. METAL WALL STUD
2. 1/2" THRU BOLT. TO METAL STUD BLOCKING
4. TOLCO FIG. 909 SWIVEL
5. 1" SCHEDULE 40 STEEL PIPE
6. TOLCO 1001 SWAY BRACE ATTACHMENT

2 RISER BRACE N.T.S.

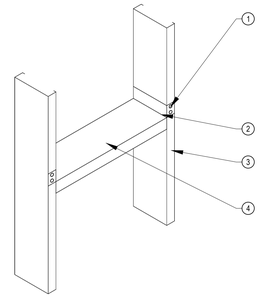

DETAIL NOTES:

1. 2- #10 SHEET METAL SCREWS EACH SIDE, TYPICAL
2. CUT TRACK FLANGES AND BEND AS SHOWN
3. WALL STUDS PER PLAN
4. BLOCKING TRACK SECTION TO MATCH SIZE AND DEPTH OF STUD

11 METAL STUD BLOCKING IN WALL N.T.S.

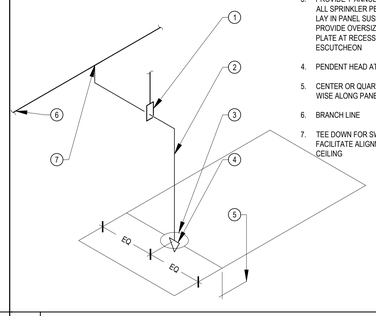

DETAIL NOTES:

1. HANGER FOR ARMOVER GREATER THAN 2FT
2. 1" SCH 40 HARD PIPE TYPICAL
3. PROVIDE 1" ANNULAR CLEARANCE AT ALL SPRINKLER PENETRATIONS OF LAY IN PANEL SUSPENDED CEILINGS. PROVIDE OVERSIZED EXPANSION PLATE AT RECESSED SPRINKLER ESCUTCHEON
4. PENDENT HEAD AT LOW CEILINGS
5. CENTER OR QUARTER POINT LENGTH WISE ALONG PANEL
6. BRANCH LINE
7. TEE DOWN FOR SWING ARMOVER TO FACILITATE ALIGNMENT AT LOW CEILING

7 TYPICAL DROP TO CEILING N.T.S.

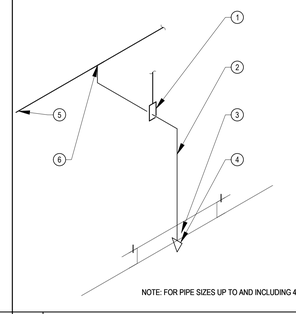

NOTE: FOR PIPE SIZES UP TO AND INCLUDING 4"

DETAIL NOTES:

1. HANGER FOR ARMOVER GREATER THAN 2FT
2. CONTRACTOR MAY PROVIDE OPTIONAL FLEX HEAD 2072F FLEXIBLE (1.25 IN i.D.) SPRINKLER HOSE WITH STUD MOUNTING BRACKET FOR HARD CEILING APPLICATION
3. FLEXHEAD STUD MOUNTING BRACKET FOR OPTIONAL HOSE APPLICATION
4. PENDENT HEAD AT LOW CEILINGS
5. BRANCH LINE
6. TEE DOWN FOR SWING ARMOVER TO FACILITATE ALIGNMENT AT LOW CEILING

3 DROP HARD CEILING N.T.S.

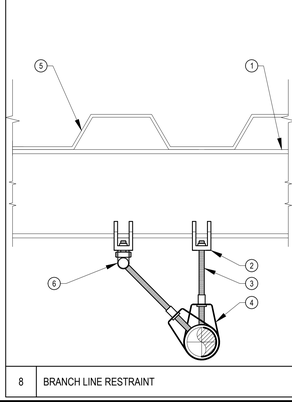

DETAIL NOTES:

1. STEEL BEAM , SEE STRUCTURAL DRAWINGS
2. TOLCO FIG 65 BEAM CLAMP
3. 3/8" TOLCO FIG. 100 ALL THREAD ROD
4. TOLCO FIG. 200 ADJUSTABLE RING HANGER
5. METAL DECKING
6. TOLCO FIG. 75 SWIVEL ATTACHMENT

8 BRANCH LINE RESTRAINT N.T.S.

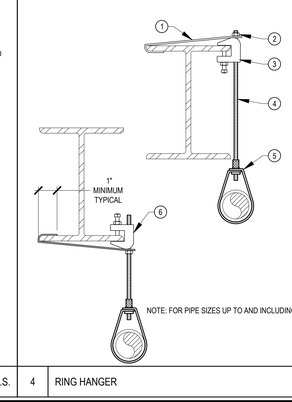

NOTE: FOR PIPE SIZES UP TO AND INCLUDING 4"

DETAIL NOTES:

1. TOLCO FIG. 69 RETAINING STRAP
2. LOCK NUT REQ'D
3. TOLCO FIG. 65 BEAM CLAMP TO TOP TO TOP FLANGE
4. 3/8" TOLCO FIG. 100 THREADED ROD
5. TOLCO FIG. 200 ADJUSTABLE RING HANGER
6. ALTERNATE BEAM CLAP LOCATION AT BOTTOM FLANGE WHERE DECK PROFILE DOES NOT ALLOW

4 RING HANGER N.T.S.

IDENTIFICATION STAMP
DIV. OF THE STATE ARCHITECT
APP: 01-119994 INC:
REVIEWED FOR
SS ☑ FLS ☑ ACS ☑
DATE: 08/16/2022

QUATTROCCHI KWOK ARCHITECTS
Main:
636 Fifth Street, Santa Rosa, CA 95404
East Bay:
55 Harrison Street, Suite 525,
Oakland, CA 94607
(707) 576-0829

REGISTERED PROFESSIONAL ENGINEER
STEVEN E. RAWSON
No. M 18652
EXP. JUNE 30, 2024
MECHANICAL
STATE OF CALIFORNIA

CEG JOB NO: 21125
CYPRESS Engineering Group
HVAC, Plumbing, Fire Protection
Building Automation Controls
Industrial Refrigeration
Environmental Compliance
Training & Technical Support
831.216.5902
8 Harris Court, Suite A8
Monterey, CA 93940
cypressegg.com

LIBERTY HIGH SCHOOL

NEW CLASSROOM BUILDING

850 2ND STREET
BRENTWOOD, CA
94513

LIBERTY UNION HIGH SCHOOL DISTRICT

REVISIONS

DSA APP NO. 01-119994

ARCH PROJECT NO:	1925.00
DRAWN BY:	SER
DRAWING SCALE:	NONE
PTN: 61721-83	FILE NO: 7-H4

CONSTRUCTION DOCUMENTS

JUNE 24, 2022

SHEET TITLE

DETAILS - FIRE PROTECTION

SHEET NUMBER

FP-6.1

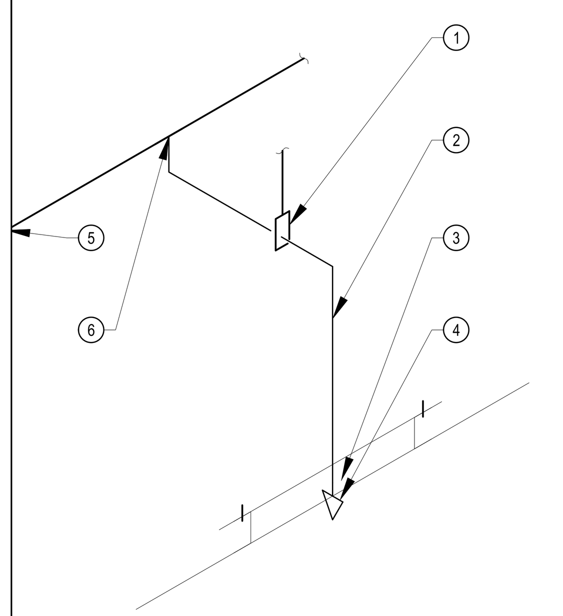

DETAIL NOTES:

1. HANGER FOR ARMOVER GREATER THAN 2FT
2. CONTRACTOR MAY PROVIDE OPTIONAL FLEX HEAD 2072F FLEXIBLE (1.25 IN i.D.) SPRINKLER HOSE WITH STUD MOUNTING BRACKET FOR HARD CEILING APPLICATION
3. FLEXHEAD STUD MOUNTING BRACKET FOR OPTIONAL HOSE APPLICATION
4. PENDENT HEAD AT LOW CEILINGS
5. BRANCH LINE
6. TEE DOWN FOR SWING ARMOVER TO FACILITATE ALIGNMENT AT LOW CEILING

20	DROP HARD CEILING	N.T.S.

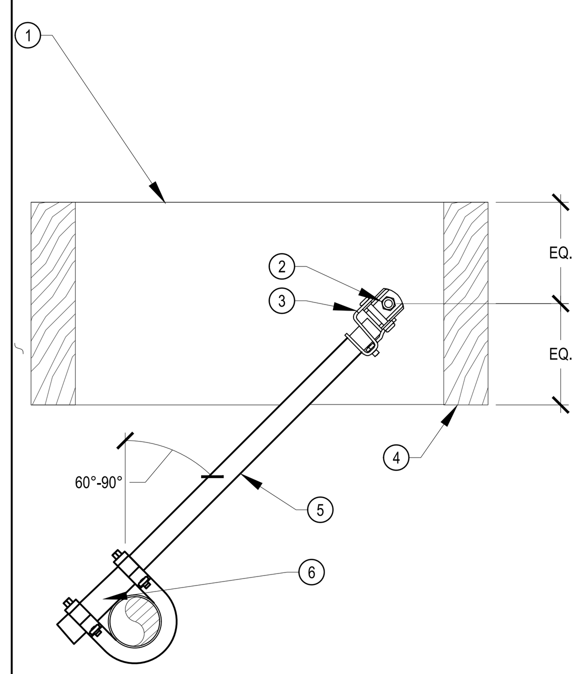

DETAIL NOTES:

1. MINIMUM 4X WOOD STRUCTURE OR 4X BLOCKING. SEE DETAIL 9/FP-6.2 FOR BLOCKING TO ROOF JOIST CONNECTION
2. 1/2' THROUGH BOLT.
3. TOLCO FIG 909 NO-THREAD SWIVEL SWAY BRACE ATTACHMENT.
4. WOOD JOIST PER PLAN.
5. 1" SCHEDULE 40 BRACE PIPE, SEE SEISMIC BRACING CALCULATION FOR SIZE.
6. TOLCO FIG 1001 SWAY BRACE ATTACHMENT.

13	LATERAL SEISMIC BRACE SB-3 AND SB-9	N.T.S.

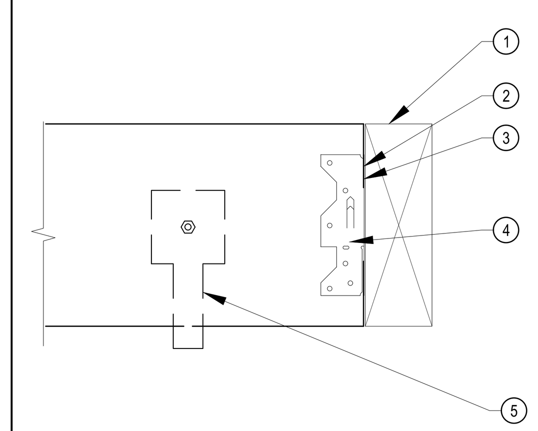

DETAIL NOTES:

1. ROOF JOIST
2. 2x, MIN BLOCKING TO MATCH DEPTH OF JOIST FOR PIPE SIZE UP TO 2"
3. 4X MINIMUM BLOCKING TO MATCH DEPTH OF ROOF JOIST FOR PIPE SIZES 2½" UP TO AND INCLUDING 6"
4. SIMPSON A35 HANGER, EACH END
5. SEE REQUIRED HANGER OR BRACING DETAIL FOR CONNECTION

9	WOOD FRAMING BLOCKING	N.T.S.

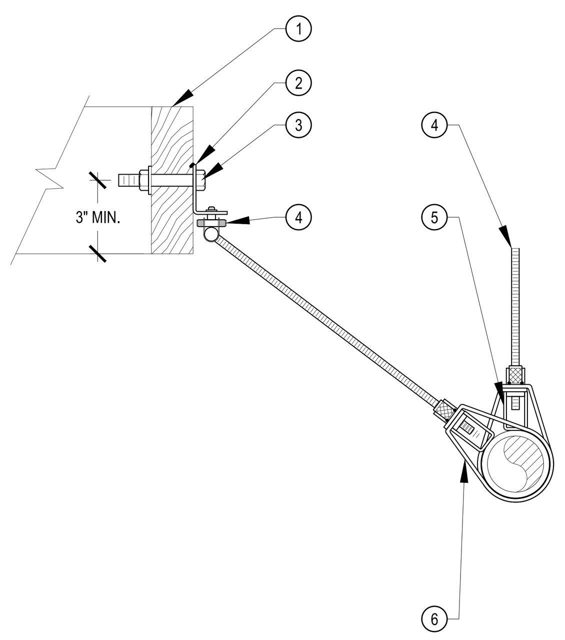

MAXIMUM 2" DIAMETER PIPE

DETAIL NOTES:

1. MINIMUM 3X WOOD STRUCTURE OR BLOCKING . SEE DETAIL 9/FP-6.2 FOR BLOCKING TO ROOF JOIST CONNECTION.
2. TOLCO FIG. 58 SIDE BEAM BRACKET
3. 3/8" THROUGH BOLT
3. TOLCO FIG 75 SWIVEL ATTACHMENT
4. SEE 4/FP-6.2 FOR ADJACENT VERTICAL HANGER WITHIN 6 INCHES.
5. TOLCO FIG 25 SURGE ARRESTOR AT RESTRAINT LOCATION PER NFPA 13-9.3.6.2
6. TOLCO FIG 200 ADJUSTABLE RING HANGER

5	BRANCH LINE RESTRAINT ABOVE CEILING	N.T.S.

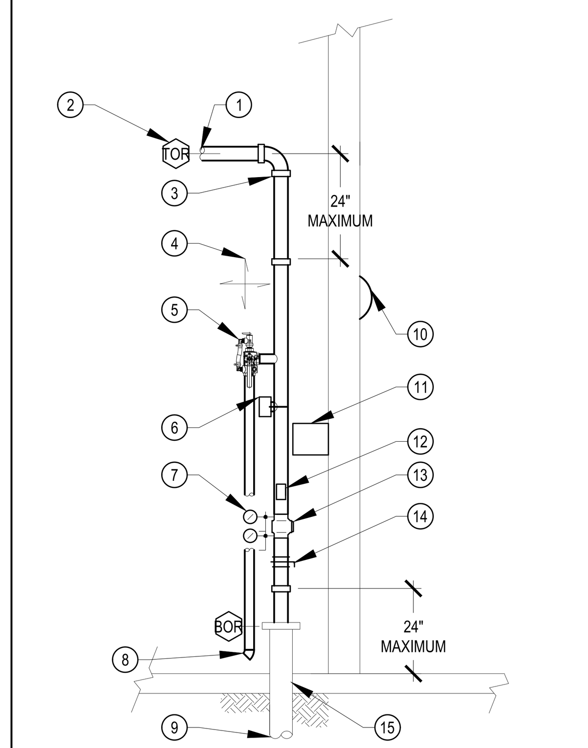

DETAIL NOTES:

1. 6" TO SYSTEM, SEE FP-B2.1 FOR OVERHEAD PIPING SIZES AND LENGTHS.
2. HYDRAULIC CALCULATION NODE, TYP
3. FLEXIBLE COUPLING, TYP
4. 4-WAY BRACE, SEE 2/FP-6.2
5. 2" TESTANDRAIN MODEL 1011A WITH MODEL 7000 PRESSURE RELIEVE VALVE SET AT 175 PSI
6. FLOW SWITCH
7. PRESSURE GAGE, TYP
8. PROVIDE TERMINATION WITH 45° EL TO SMOOTH BORE CORROSION-RESISTANT OUTLET GIVING FLOW EQUIVALENT TO ONE SPRINKLER FOR ALARM TEST IN ACCORDANCE WITH NFPA 13-8.17.4.2.4. DAYLIGHT OVER HUB DRAIN, SEE PLUMBING DRAWINGS.
9. SEE 1/FP0.1 FOR UNDERGROUND RISER, SEE FP1.1 FOR IN-BUILDING RISER PIPE SIZE AND LENGTHS.
10. 10" 120V ALARM BELL
11. SPARE HEAD CABINET
12. HYDRAULIC DATA PLATE
13. TYCO CV-1FR UL LISTED CHECK VALVE
14. BUTTERFLY INDICATING VALVE WITH TAMPER SWITCH.
15. FILL ANNULAR CLEARANCE WITH FLEXIBLE FIRE CAULK, SEE 1/ FP0.1.

1	BUILDING B WET RISER	N.T.S.

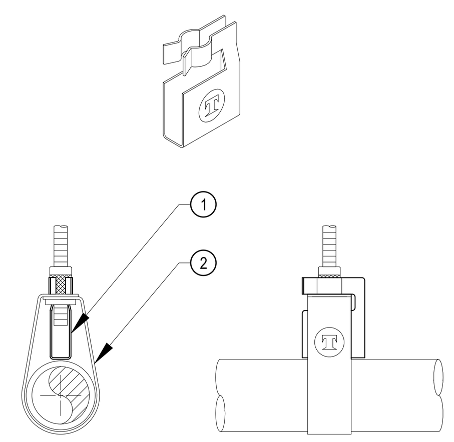

DETAIL NOTES:

1. TOLCO FIG. 25 SURGE RESTRAINT
2. TOLCO FIG. 200 ADJUSTABLE RING HANGER

NOTE:
1. USE TYPE 1-FOR 1" AND 1-1/4" PIPE AND HANGER
2. USE TYPE 2- FOR 1-1/2" AND 2" PIPE AND HANGERS
3. NOT REQUIRED IF ALL THREAD ROD IS INSTALLED TIGHT TO TOP OF PIPE

21	SURGE RESTRAINT	N.T.S.

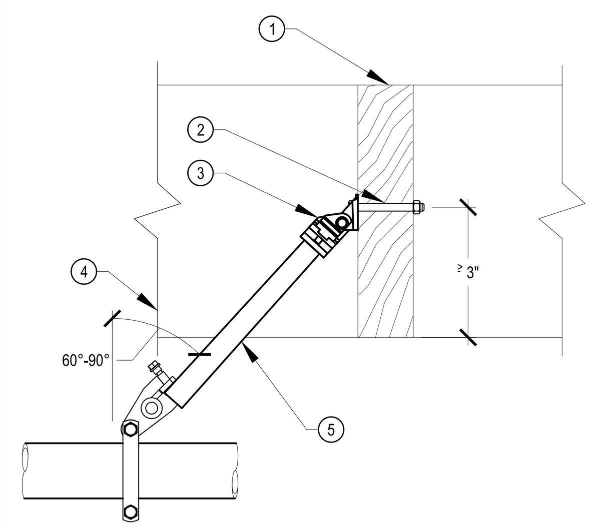

DETAIL NOTES:

1. MINIMUM 4X WOOD STRUCTURE OR 4X BLOCKING. SEE DETAIL 9/FP-6.2 FOR BLOCKING TO ROOF JOIST CONNECTION
2. MIN 1/2' THROUGH BOLT PER NFPA 13 FIGURE 9.3.5.12.1
3. TOLCO FIG 909 NO-THREAD SWIVEL SWAY BRACE ATTACHMENT.
4. WOOD JOIST PER PLAN.
5. 1" SCHEDULE 40 BRACE PIPE, SEE SEISMIC BRACING CALCULATION FOR SIZE.
6. TOLCO FIG FIG 4L IN-LINE SWAY BRACE ATTACHMENT.

14	LONGITUDINAL SEISMIC BRACE SB-4	

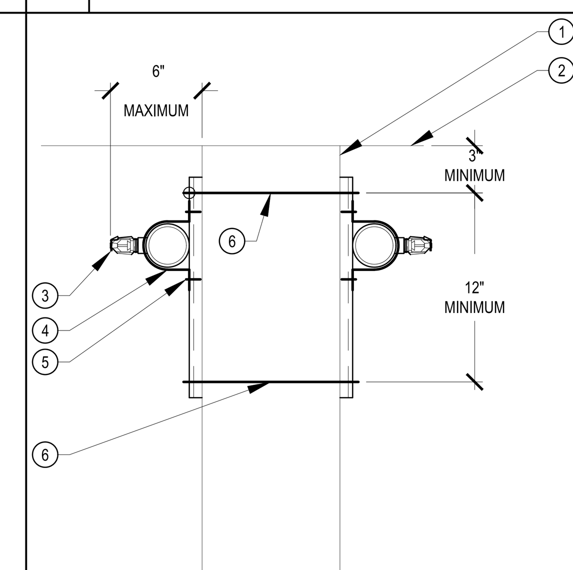

DETAIL NOTES:

1. GLB SEE STRUCTURAL DRAWINGS.
2. STRUCTURAL CEILING.
3. HORIZONTAL SIDEWALL SPRINKLER HEAD SEE PLANS FOR LOCATION.
4. TOLCO B2400 PIPE STRAP HANGER AND BRANCHLINE RESTRAINT.
5. 3/8" x 1 1/4" BOLT TO N228WO CHANNEL NUT. TORQUE TO 19 FT-LBS IN ACCORDANCE WITH OPM-0052-13.
6. 1/2" THROUGH BOLT TYPICAL.
7. BLINE B52 STRUT CHANNEL

10	SIDE WALL SPRINKLER, HANGER, BRANCHLINE RESTRAINT, SB-2	N.T.S.

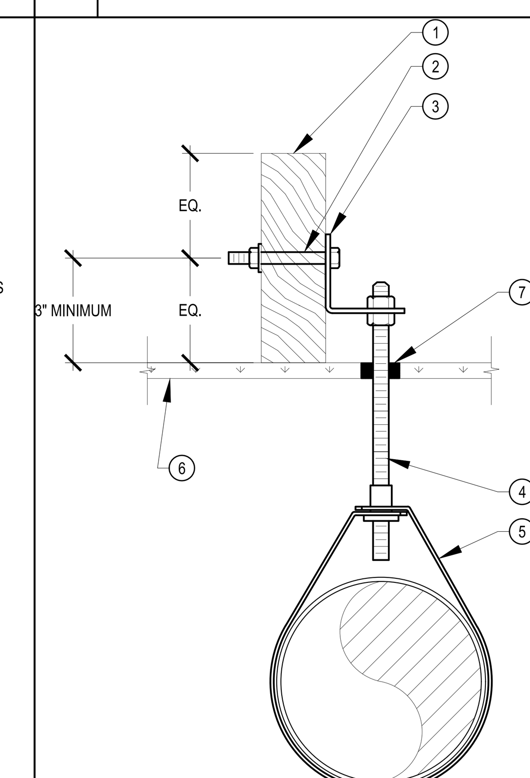

NOTE: FOR PIPE SIZES UP TO AND INCLUDING 4"

DETAIL NOTES:

1. MINIMUM 4X WOOD STRUCTURE OR 4X BLOCKING. SEE DETAIL 9/FP-6.2 FOR BLOCKING TO ROOF JOIST CONNECTION.
2. 1/2" THROUGH BOLT.
3. TOLCO FIG. 51 SIDE BEAM BRACKET.
4. 3/8" TOLCO FIG. 100 ALL THREAD ROD.
5. TOLCO FIG. 200 RING HANGER.
6. CEILING.
7. FIRE CAULK.

6	MAIN HANGER BELOW CEILING	N.T.S.

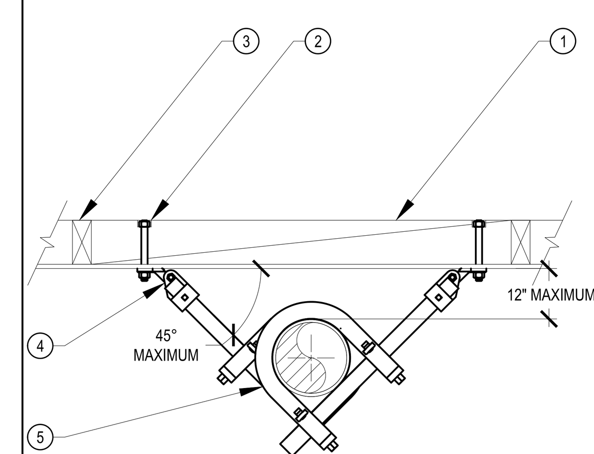

DETAIL NOTES:

1. PROVIDE 4X BLOCKING W/A34 TOP AND BOTTOM AT EACH END
2. 1/2" Ø GALV, THROUGH BOLT
3. WALL FRAMING
4. TOLCO FIG 909 SWIVEL
5. TOLCO 1001 FAST CLAMP SWAY BRACE ATTACHMENT

2	RISER BRACE	N.T.S.

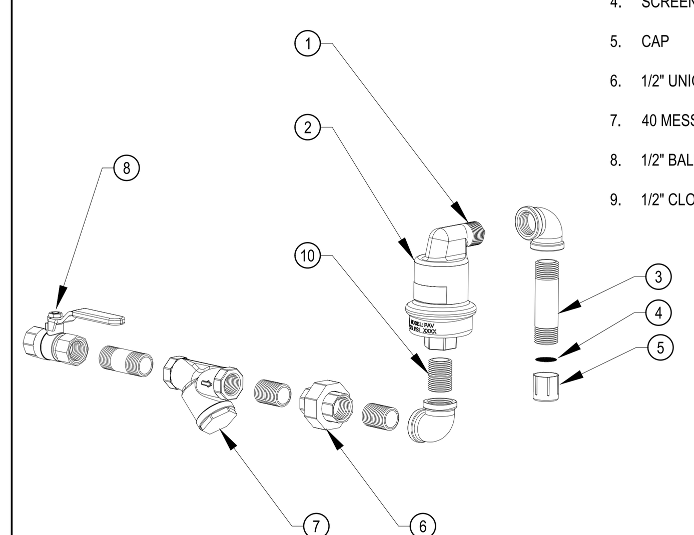

NOTE: CLOSE VALVE AND CAP AFTER SYSTEM PURGING IS COMPLETE

DETAIL NOTES:

1. 1/2" MALE NPT DRAIN CONNECTION
2. POTTERS PAY 175 PSI AIR VENT VALVE
3. 1/2"x2" NIPPLE
4. SCREEN
5. CAP
6. 1/2" UNION CONNECTION
7. 40 MESS STRAINER
8. 1/2" BALL VALVE
9. 1/2" CLOSE NIPPLE, TYP

15	AIR VENT	N.T.S.

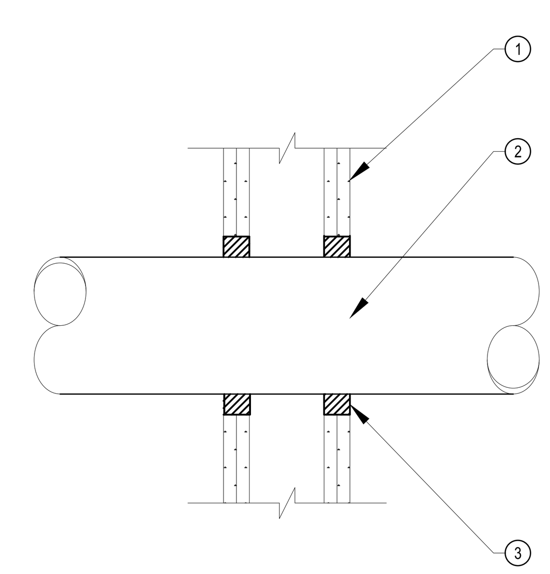

DETAIL NOTES:

1. SEE (E) MODULAR BUILDING DRAWINGS FOR RATED ASSEMBLIES
2. STEEL PIPE
3. FIRE CAULK ANNULAR SPACE AROUND PIPE PENETRATION WITH HILTI FS-ONE SEALANT IN ACCORDANCE WITH MANUFACTURER'S LISTING W-L-1054

11	FIRE CAULK	N.T.S.

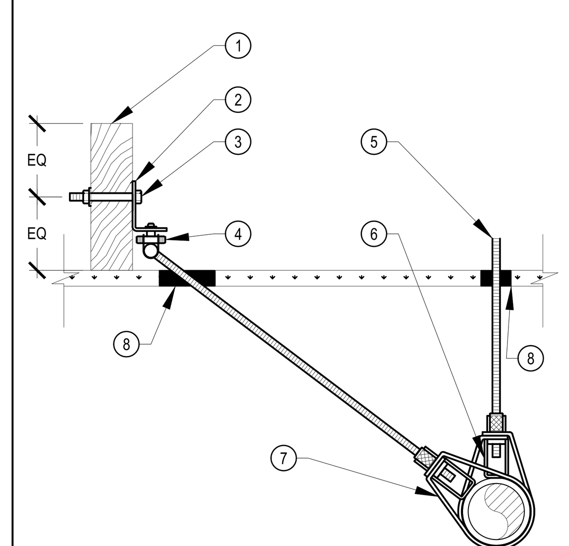

MAXIMUM 2" DIAMETER PIPE

DETAIL NOTES:

1. MINIMUM 3X WOOD STRUCTURE OR BLOCKING . SEE DETAIL 9/FP-6.2 FOR BLOCKING TO ROOF JOIST CONNECTION.
2. TOLCO FIG. 51 SIDE BEAM BRACKET
3. 3/8" THROUGH-BOLT
4. TOLCO FIG 75 SWIVEL ATTACHMENT
5. SEE 3/FP-6.1 FOR HANGER ATTACHMENT
6. TOLCO FIG 25 SURGE ARRESTOR AT RESTRAINT LOCATION PER NFPA 13-9.3.6.2
7. TOLCO FIG 200 ADJUSTABLE RING HANGER
8. FIRE CAULK

7	BRANCH LINE RESTRAINT	N.T.S.

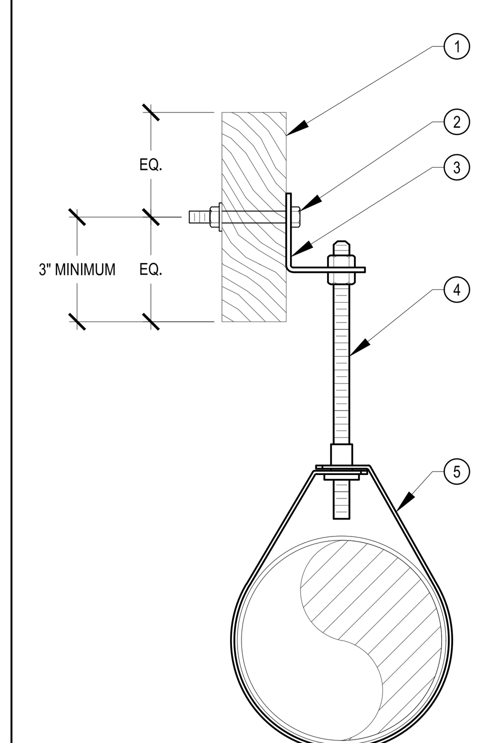

NOTE: FOR PIPE SIZES UP TO AND INCLUDING 4"

DETAIL NOTES:

1. MINIMUM 4X WOOD STRUCTURE OR 4X BLOCKING. SEE DETAIL 9/FP-6.2 FOR BLOCKING TO ROOF JOIST CONNECTION
2. 1/2" THROUGH-BOLT
3. TOLCO FIG. 51 SIDE BEAM BRACKET
4. 3/8" TOLCO FIG. 100 ALL THREAD ROD
5. TOLCO FIG 200 ADJUSTABLE RING HANGER

3	MAIN HANGER	N.T.S.

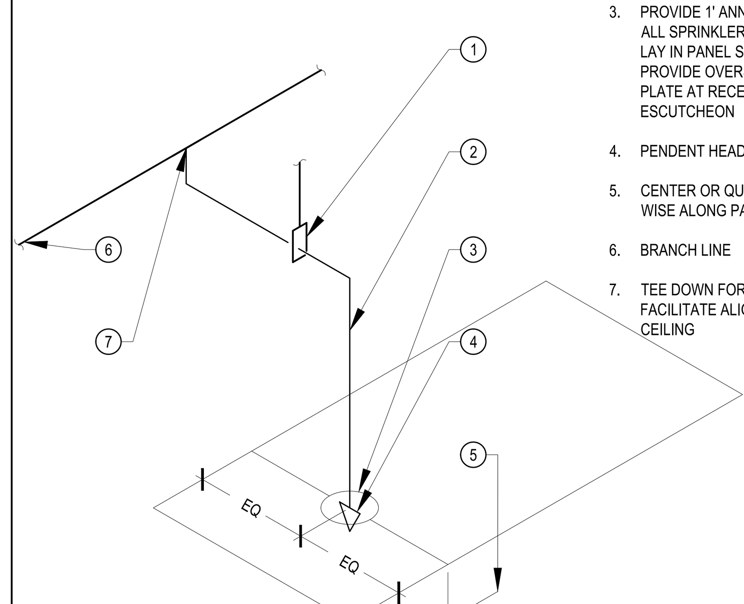

DETAIL NOTES:

1. HANGER FOR ARMOVER GREATER THAN 2FT
2. 1" SCH 40 HARD PIPE TYPICAL
3. PROVIDE 1' ANNULAR CLEARANCE AT ALL SPRINKLER PENETRATIONS OF LAY IN PANEL SUSPENDED CEILINGS. PROVIDE OVERSIZED EXPANSION PLATE AT RECESSED SPRINKLER ESCUTCHEON
4. PENDENT HEAD AT LOW CEILINGS
5. CENTER OR QUARTER POINT LENGTH WISE ALONG PANEL
6. BRANCH LINE
7. TEE DOWN FOR SWING ARMOVER TO FACILITATE ALIGNMENT AT LOW CEILING

19	TYPICAL DROP TO CEILING	N.T.S.

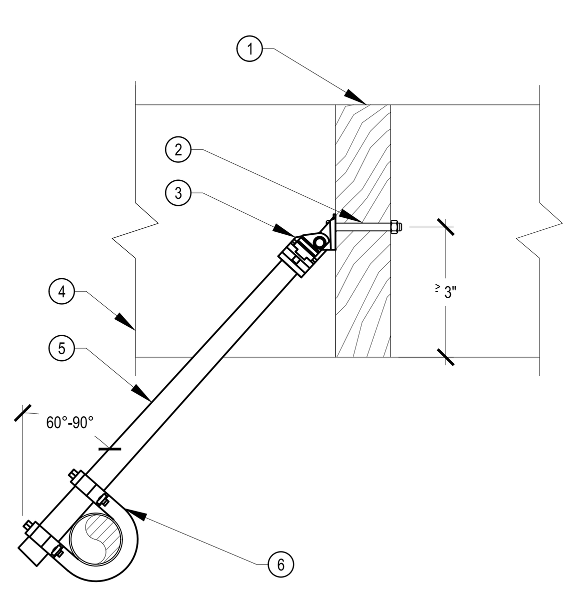

DETAIL NOTES:

1. MINIMUM 4X WOOD STRUCTURE OR 4X BLOCKING. SEE DETAIL 9/FP-6.2 FOR BLOCKING TO ROOF JOIST CONNECTION
2. MIN 1/2' THROUGH BOLT PER NFPA 13 FIGURE 9.3.5.12.1
3. TOLCO FIG 909 NO-THREAD SWIVEL SWAY BRACE ATTACHMENT.
4. WOOD JOIST PER PLAN.
5. 1" SCHEDULE 40 BRACE PIPE, SEE SEISMIC BRACING CALCULATION FOR SIZE.
6. TOLCO FIG 1001 SWAY BRACE ATTACHMENT.

12	LATERAL SEISMIC BRACE SB-1	N.T.S.

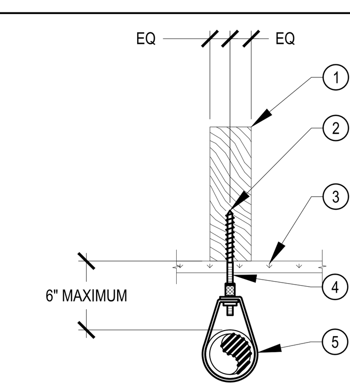

NOTE: FOR PIPE SIZES UP TO AND INCLUDING 2"

DETAIL NOTES:

1. MIN. 2X JOIST OR 4X6 BLOCKING FOR PIPE UP TO 2 INCHES IN ACCORDANCE WITH NFPA13-T9.1.5.7.2
2. PREDRILL IN ACCORDANCE WITH NFPA13-9.1.5.7.4. MINMUM 3" PENETRATION INTO WOOD.
3. ACOUSTIC CEILING, SEE ARCHITECT'S DRAWINGS.
4. 3/8" TOLCO FIG. 105 COACH SCREW HANGER ROD.
5. TOLCO FIG. 200 ADJUSTABLE RING HANGER.
6. TOLCO FIG 1001 SWAY BRACE ATTACHMENT.

8	BRANCHLINE COACH SCREW HANGER BELOW CEILING	N.T.S.

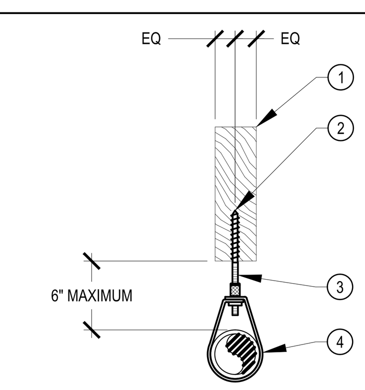

NOTE: FOR PIPE SIZES UP TO AND INCLUDING 2"

DETAIL NOTES:

1. MINIMUM 2X JOIST OR 2X BLOCKING FOR PIPE UP TO 2 INCHES IN ACCORDANCE WITH NFPA13-T9.1.5.7.2
2. PREDRILL IN ACCORDANCE WITH NFPA13-9.1.5.7.4. MINMUM 3" PENETRATION INTO WOOD.3.
3. 3/8" TOLCO FIG. 105 COACH SCREW HANGER ROD.
4. TOLCO FIG. 200 ADJUSTABLE RING HANGER.

4	BRANCHLINE COACH SCREW HANGER ABOVE CEILING	N.T.S.

IDENTIFICATION STAMP
DIV. OF THE STATE ARCHITECT
APP: 01-119994 INC:
REVIEWED FOR
SS ☑ FLS ☑ ACS ☑
DATE: 08/16/2022

QUATTROCCHI KWOK ARCHITECTS
Main:
636 Fifth Street, Santa Rosa, CA 95404
East Bay:
55 Harrison Street, Suite 525,
Oakland, CA 94607
(707) 576-0829

REGISTERED PROFESSIONAL ENGINEER
STEVEN E. RAWSON
No. M30657
EXP. JUNE 30, 2024
MECHANICAL
STATE OF CALIFORNIA

CEG JOB NO: 21125
CYPRESS Engineering Group
HVAC, Plumbing, Fire Protection
Building Commissioning
Industrial Refrigeration
Environmental Compliance
Training & Technical Support
831.218.1802
8 Harris Court, Suite A8
Monterey, CA 93940
cypresseg.com

LIBERTY HIGH SCHOOL

NEW CLASSROOM BUILDING

850 2ND STREET
BRENTWOOD, CA
94513

LIBERTY UNION HIGH SCHOOL DISTRICT

REVISIONS

DSA APP NO. 01-119994

ARCH PROJECT NO:	1925.00
DRAWN BY:	SER
DRAWING SCALE:	NONE
PTN: 61721-83	FILE NO: 7-H4

CONSTRUCTION DOCUMENTS

JUNE 24, 2022

SHEET TITLE

DETAILS - FIRE PROTECTION

SHEET NUMBER

FP-6.2

HYDRAULIC - SYSTEM

THIS BUILDING IS PROTECTED BY A HYDRAULIC DESIGN AUTOMATIC SPRINKLER SYSTEM

LOCATION: ____________

SPRINKLER INFORMATION

NUMBER OF FLOWING SPRINKLERS: ________ PROTECTION AREA PER SPRINKLER: ________
MANUFACTURER: ________ MODEL: ________ TEMPERATURE: ________
TYPE: ________ K-FACTOR: ________
ORIFICE: ________

BASIS OF DESIGN

STANDARD: NFPA 13, 2016 EDITION HAZARD GROUP: ________
DENSITY: ________ DESIGN AREA OF DISCHARGE: ________

SYSTEM DEMAND

FLOW AT THE BASE OF THE RISER THE BASE OF THE RISER: ________ HOSE STREAM ALLOWANCE: INSIDE:
RESIDUAL PRESSURE AT THE BASE OF THE RISER: ________ OUTSIDE: ________ TOTAL
REQUIRED FLOW AT THE SOURCE: ________ REMOTE SPRINKLER FLOW GPM: ________ @: ________
REQUIRED PRESSURE AT THE SOURCE: ________

NOTE: SEE FP-A2.2 AND FP-B2.1 FOR HYDRAULIC DATA PLATE INFORMATION

1 HYDRAULIC DATA PLATE TEMPLATE N.T.S.

Sprinkler System - General Information

For:
LIBERTY HIGH SCHOOL NEW CLASSROOM BUILDING
LIBERTY UNION SCHOOL DISTRICT
850 2ND STREET, BRENTWOOD, CA 94513

Pipe Scheduled System: ☐ YES ☒ NO
High Piled Storage: ☐ YES ☒ NO
Rack Storage: ☐ YES ☒ NO
Commodity Class: ________
Max Storage Height: ________ ft m
Aisle Width (min): ________ ft m
Encapsulation: ☐ YES ☒ NO
Solid Shelving: ☐ YES ☒ NO
Flammable/Combustible Liquids: ☐ YES ☒ NO
Other Storage ☐ YES ☒ NO

Hazardous Material: ☐ YES ☒ NO
Idle pallets: ☐ YES ☒ NO
Antifreeze Systems ☐ YES ☒ NO
Location: ________
Dry or Aux Systems ☐ YES ☒ NO
Location: ________

Date: ________
Flow Test Date: 05/05/2022
Static: 68 psi bar
Residual: 66 psi bar
Flow: 780 gpm lpm
Pitot: ________ psi bar
Date: ________
Location: ________

Location of Aux/low point drain ________
SCIENCE B101

Dry pipe/double interlock preaction valves test results:

Original main drain test results:
Static: ________ psi bar
Residual: ________ psi bar
Venting Valve location: ________

Where injection systems are used to treat MIC or corrosion:
Type of chemical: ________ Concentration: ________ For purpose of disposal, see: ________

Name of contractor or designer: CYPRESS ENGINEERING
Address: 8 HARRIS CT, SUITE A8, MONTEREY CA 93940
Phone: 831-218-1802

2 GENERAL INFORMATION SIGN TEMPLATE

SEISMIC BRACING CALCULATIONS (SB-7)

PROJECT	LIBERTY HIGH SCHOOL NEW CLASSROOM BUILDING	CYPRESS ENGINEERING GROUP
ADDRESS	850 2ND STREET BRENTWOOD, CA 94513	8 HARRIS CT. SUITE A8, MONTEREY, CA 93940 (831)-218-1802

BRACE INFORMATION
MAXIMUM SPACING: 30'-0"
MAXIMUM BRACE LENGTH: 7'-0"
BRACING MATERIAL: 1" Sch. 40
ANGLE FROM VERTICAL: 60° Minimum
LEAST RADIUS OF GYRATION 0.421"
L/R VALUE*: 200
MAXIMUM HORIZONTAL LOAD: NFPA 13: TABLE 9.3.5.11(b) 1604 lbs

SEISMIC BRACE ATTACHMENTS
STRUCTURE ATTACHMENT FITTINGS OR TENSION-ONLY BRACING SYSTEMS:
MAKE: TOLCO MODEL FIG 800
LISTED LOAD RATING: 1270 ADJUSTED LOAD RATING: 1099 x 0.8 = 880
SWAY BRACE (PIPE ATTACHMENT) FITTING:
MAKE: TOLCO MODEL FIG 1001 SWAY CLAMP
LISTED LOAD RATINGS: 2000 ADJUSTED LOAD RATING: 1732 x0.8 = 1386
Seismic Brace Assembly Detail (Provide detail on plans)
SEE DETAIL 5/ FP6.1.

FASTENER INFORMATION
ORIENTATION OF CONNECTING SURFACE: NFPA Type C
TYPE: Through Bolt
DIAMTETER: 1/2 in.
LENGTH: 1/2 in.
MAXIMUM LOAD: 2550 lbs.
NFPA 13: FIGURE 9.3.5.12.1

BRACE IDENTIFICATION NO. (TO BE USED ON PLANS) SB-7
X LATERAL BRACE | LONGITUDINAL BRACE

SEISMIC COEFFICIENT Cp= 0.65

DIAMETER	TYPE	LENGTH	TOTAL(FT)	WEIGHT PER FT	TOTAL WEIGHT
4 in.	Sch. 10 Steel		30.00	11.78	353.40
1 1/4 in.	Sch. 40 Steel		60.00	2.93	175.80
1 in.	Sch. 40 Steel		65.00	2.05	133.25
Total Weight of Water Filled Piping					662.45
Wp (Total weight of Water Filled Piping x 1.15 to account for valves and fittings)					761.82
HorixontalForce (NFPA 13 9.3.5.9.3) Fpw = Cp x Wp =					495.18

*Excludes tension-only bracing systems

SEISMIC BRACING CALCULATIONS (SB-4)

PROJECT	LIBERTY HIGH SCHOOL NEW CLASSROOM BUILDING	CYPRESS ENGINEERING GROUP
ADDRESS	850 2ND STREET BRENTWOOD, CA 94513	8 HARRIS CT. SUITE A8, MONTEREY, CA 93940 (831)-218-1802

BRACE INFORMATION
MAXIMUM SPACING: 30'-0"
MAXIMUM BRACE LENGTH: 7'-0"
BRACING MATERIAL: 1" Sch. 40
ANGLE FROM VERTICAL: 60° Minimum
LEAST RADIUS OF GYRATION 0.421"
L/R VALUE*: 200
MAXIMUM HORIZONTAL LOAD: NFPA 13: TABLE 9.3.5.11(b) 1604 lbs

SEISMIC BRACE ATTACHMENTS
STRUCTURE ATTACHMENT FITTINGS OR TENSION-ONLY BRACING SYSTEMS:
MAKE: TOLCO MODEL FIG 909 NO THREAD SWIVEL
LISTED LOAD RATING: 2015 ADJUSTED LOAD RATING: 1745 x0.8 = 1396
SWAY BRACE (PIPE ATTACHMENT) FITTING:
MAKE: TOLCO MODEL FIG 4L SWAY BRACE ATTACHMENT
LISTED LOAD RATINGS: 2000 ADJUSTED LOAD RATING: 1732 x0.8 = 1385
Seismic Brace Assembly Detail (Provide detail on plans)
SEE DETAIL 14/ FP6.2.

FASTENER INFORMATION
ORIENTATION OF CONNECTING SURFACE: NFPA Type F
TYPE: Through Bolt
DIAMTETER: 1/2 in.
LENGTH: 3 1/2 in.
MAXIMUM LOAD: 600 lbs.
NFPA 13: FIGURE 9.3.5.12.1

BRACE IDENTIFICATION NO. (TO BE USED ON PLANS) SB-4
LATERAL BRACE | X LONGITUDINAL BRACE

SEISMIC COEFFICIENT Cp= 0.65

DIAMETER	TYPE	LENGTH	TOTAL(FT)	WEIGHT PER FT	TOTAL WEIGHT
4 in.	Sch. 10 Steel		40.00	11.78	471.20
Total Weight of Water Filled Piping					471.20
Wp (Total weight of Water Filled Piping x 1.15 to account for valves and fittings)					541.88
HorixontalForce (NFPA 13 9.3.5.9.3) Fpw = Cp x Wp =					352.22

*Excludes tension-only bracing systems

SEISMIC BRACING CALCULATIONS (SB-1)

PROJECT	LIBERTY HIGH SCHOOL NEW CLASSROOM BUILDING	CYPRESS ENGINEERING GROUP
ADDRESS	850 2ND STREET BRENTWOOD, CA 94513	8 HARRIS CT. SUITE A8, MONTEREY, CA 93940 (831)-218-1802

BRACE INFORMATION
MAXIMUM SPACING: 30'-0"
MAXIMUM BRACE LENGTH: 7'-0"
BRACING MATERIAL: 1" Sch. 40
ANGLE FROM VERTICAL: 60° Minimum
LEAST RADIUS OF GYRATION 0.421"
L/R VALUE*: 200
MAXIMUM HORIZONTAL LOAD: NFPA 13: TABLE 9.3.5.11(b) 1604 lbs

SEISMIC BRACE ATTACHMENTS
STRUCTURE ATTACHMENT FITTINGS OR TENSION-ONLY BRACING SYSTEMS:
MAKE: TOLCO MODEL FIG 909 NO THREAD SWIVEL
LISTED LOAD RATING: 2015 ADJUSTED LOAD RATING: 1745 x0.8 = 1396
SWAY BRACE (PIPE ATTACHMENT) FITTING:
MAKE: TOLCO MODEL FIG 1001 SWAY CLAMP
LISTED LOAD RATINGS: 2000 ADJUSTED LOAD RATING: 1732 x0.8 = 1385
Seismic Brace Assembly Detail (Provide detail on plans)
SEE DETAIL 12/ FP6.2.

FASTENER INFORMATION
ORIENTATION OF CONNECTING SURFACE: NFPA Type F
TYPE: Through Bolt
DIAMTETER: 1/2 in.
LENGTH: 3 1/2 in.
MAXIMUM LOAD: 600 lbs.
NFPA 13: FIGURE 9.3.5.12.1

BRACE IDENTIFICATION NO. (TO BE USED ON PLANS) SB-1
X LATERAL BRACE | LONGITUDINAL BRACE

SEISMIC COEFFICIENT Cp= 0.65

DIAMETER	TYPE	LENGTH	TOTAL(FT)	WEIGHT PER FT	TOTAL WEIGHT
4 in.	Sch. 10 Steel		30.00	11.78	353.40
Total Weight of Water Filled Piping					353.40
Wp (Total weight of Water Filled Piping x 1.15 to account for valves and fittings)					406.41
HorixontalForce (NFPA 13 9.3.5.9.3) Fpw = Cp x Wp =					264.17

*Excludes tension-only bracing systems

SEISMIC BRACING CALCULATIONS (SB-5)

PROJECT	LIBERTY HIGH SCHOOL NEW CLASSROOM BUILDING	CYPRESS ENGINEERING GROUP
ADDRESS	850 2ND STREET BRENTWOOD, CA 94513	8 HARRIS CT. SUITE A8, MONTEREY, CA 93940 (831)-218-1802

BRACE INFORMATION
MAXIMUM SPACING: 30'-0"
MAXIMUM BRACE LENGTH: 7'-0"
BRACING MATERIAL: 1" Sch. 40
ANGLE FROM VERTICAL: 60° Minimum
LEAST RADIUS OF GYRATION 0.421"
L/R VALUE*: 200
MAXIMUM HORIZONTAL LOAD: NFPA 13: TABLE 9.3.5.11(b) 1604 lbs

SEISMIC BRACE ATTACHMENTS
STRUCTURE ATTACHMENT FITTINGS OR TENSION-ONLY BRACING SYSTEMS:
MAKE: TOLCO MODEL FIG 800
LISTED LOAD RATING: 1270 ADJUSTED LOAD RATING: 1099 x 0.8 = 880
SWAY BRACE (PIPE ATTACHMENT) FITTING:
MAKE: TOLCO MODEL FIG 1001 SWAY CLAMP
LISTED LOAD RATINGS: 2000 ADJUSTED LOAD RATING: 1732 x0.8 = 1386
Seismic Brace Assembly Detail (Provide detail on plans)
SEE DETAIL 5/ FP6.1.

FASTENER INFORMATION
ORIENTATION OF CONNECTING SURFACE: NFPA Type C
TYPE: Through Bolt
DIAMTETER: 1/2 in.
LENGTH: 1/2 in.
MAXIMUM LOAD: 2550 lbs.
NFPA 13: FIGURE 9.3.5.12.1

BRACE IDENTIFICATION NO. (TO BE USED ON PLANS) SB-5
X LATERAL BRACE | LONGITUDINAL BRACE

SEISMIC COEFFICIENT Cp= 0.65

DIAMETER	TYPE	LENGTH	TOTAL(FT)	WEIGHT PER FT	TOTAL WEIGHT
4 in.	Sch. 10 Steel		30.00	11.78	353.40
Total Weight of Water Filled Piping					353.40
Wp (Total weight of Water Filled Piping x 1.15 to account for valves and fittings)					406.41
HorixontalForce (NFPA 13 9.3.5.9.3) Fpw = Cp x Wp =					264.17

*Excludes tension-only bracing systems

SEISMIC BRACING CALCULATIONS (SB-2)

PROJECT	LIBERTY HIGH SCHOOL NEW CLASSROOM BUILDING	CYPRESS ENGINEERING GROUP
ADDRESS	850 2ND STREET BRENTWOOD, CA 94513	8 HARRIS CT. SUITE A8, MONTEREY, CA 93940 (831)-218-1802

BRACE INFORMATION
MAXIMUM SPACING: 12'-0"
MAXIMUM BRACE LENGTH:
BRACING MATERIAL:
ANGLE FROM VERTICAL:
LEAST RADIUS OF GYRATION
L/R VALUE*:
MAXIMUM HORIZONTAL LOAD: NFPA 13: TABLE 9.3.5.11(b)

SEISMIC BRACE ATTACHMENTS
STRUCTURE ATTACHMENT FITTINGS OR TENSION-ONLY BRACING SYSTEMS:
MAKE: MODEL
LISTED LOAD RATING: ADJUSTED LOAD RATING:
SWAY BRACE (PIPE ATTACHMENT) FITTING:
MAKE: BLINE MODEL B2400 PIPE STRAP
LISTED LOAD RATINGS: 755 ADJUSTED LOAD RATING: 755
Seismic Brace Assembly Detail (Provide detail on plans)
SEE DETAIL 10/FP6.2. SEE EATON BLINE OPM-0052-13 PAGE 13-10

FASTENER INFORMATION
ORIENTATION OF CONNECTING SURFACE: NFPA Type F
TYPE: Through Bolt
DIAMTETER: 1/2 in.
LENGTH: 3 1/2 in.
MAXIMUM LOAD: 600 lbs.
NFPA 13: FIGURE 9.3.5.12.1

BRACE IDENTIFICATION NO. (TO BE USED ON PLANS) SB-2
LATERAL BRACE | X LONGITUDINAL BRACE

SEISMIC COEFFICIENT Cp= 0.65

DIAMETER	TYPE	LENGTH	TOTAL(FT)	WEIGHT PER FT	TOTAL WEIGHT
1 1/2 in.	Sch. 40 Steel		12.00	3.61	43.32
Total Weight of Water Filled Piping					43.32
Wp (Total weight of Water Filled Piping x 1.15 to account for valves and fittings)					49.82
HorixontalForce (NFPA 13 9.3.5.9.3) Fpw = Cp x Wp =					32.38

*Excludes tension-only bracing systems

SEISMIC BRACING CALCULATIONS (SB-6)

PROJECT	LIBERTY HIGH SCHOOL NEW CLASSROOM BUILDING	CYPRESS ENGINEERING GROUP
ADDRESS	850 2ND STREET BRENTWOOD, CA 94513	8 HARRIS CT. SUITE A8, MONTEREY, CA 93940 (831)-218-1802

BRACE INFORMATION
MAXIMUM SPACING: 30'-0"
MAXIMUM BRACE LENGTH: 7'-0"
BRACING MATERIAL: 1" Sch. 40
ANGLE FROM VERTICAL: 60° Minimum
LEAST RADIUS OF GYRATION 0.421"
L/R VALUE*: 200
MAXIMUM HORIZONTAL LOAD: NFPA 13: TABLE 9.3.5.11(b) 1604 lbs

SEISMIC BRACE ATTACHMENTS
STRUCTURE ATTACHMENT FITTINGS OR TENSION-ONLY BRACING SYSTEMS:
MAKE: TOLCO MODEL FIG 800
LISTED LOAD RATING: 1270 ADJUSTED LOAD RATING: 1099 x 0.8 = 880
SWAY BRACE (PIPE ATTACHMENT) FITTING:
MAKE: TOLCO MODEL FIG 4L SWAY BRACE ATTACHMENT
LISTED LOAD RATINGS: 2000 ADJUSTED LOAD RATING: 1732 x0.8 = 1385
Seismic Brace Assembly Detail (Provide detail on plans)
SEE DETAIL 6/ FP6.1.

FASTENER INFORMATION
ORIENTATION OF CONNECTING SURFACE: NFPA Type C
TYPE: Through Bolt
DIAMTETER: 1/2 in.
LENGTH: 1/2 in.
MAXIMUM LOAD: 2550 lbs.
NFPA 13: FIGURE 9.3.5.12.1

BRACE IDENTIFICATION NO. (TO BE USED ON PLANS) SB-6
LATERAL BRACE | X LONGITUDINAL BRACE

SEISMIC COEFFICIENT Cp= 0.65

DIAMETER	TYPE	LENGTH	TOTAL(FT)	WEIGHT PER FT	TOTAL WEIGHT
4 in.	Sch. 10 Steel		40.00	11.78	471.20
Total Weight of Water Filled Piping					471.20
Wp (Total weight of Water Filled Piping x 1.15 to account for valves and fittings)					541.88
HorixontalForce (NFPA 13 9.3.5.9.3) Fpw = Cp x Wp =					352.22

*Excludes tension-only bracing systems

SEISMIC BRACING CALCULATIONS (SB-3)

PROJECT	LIBERTY HIGH SCHOOL NEW CLASSROOM BUILDING	CYPRESS ENGINEERING GROUP
ADDRESS	850 2ND STREET BRENTWOOD, CA 94513	8 HARRIS CT. SUITE A8, MONTEREY, CA 93940 (831)-218-1802

BRACE INFORMATION
MAXIMUM SPACING: 25'-0"
MAXIMUM BRACE LENGTH: 7'-0"
BRACING MATERIAL: 1" Sch. 40
ANGLE FROM VERTICAL: 60° Minimum
LEAST RADIUS OF GYRATION 0.421"
L/R VALUE*: 200
MAXIMUM HORIZONTAL LOAD: NFPA 13: TABLE 9.3.5.11(b) 1604 lbs

SEISMIC BRACE ATTACHMENTS
STRUCTURE ATTACHMENT FITTINGS OR TENSION-ONLY BRACING SYSTEMS:
MAKE: TOLCO MODEL FIG 909 NO THREAD SWIVEL
LISTED LOAD RATING: 2015 ADJUSTED LOAD RATING: 1745 x0.8 = 1396
SWAY BRACE (PIPE ATTACHMENT) FITTING:
MAKE: TOLCO MODEL FIG 1001 SWAY CLAMP
LISTED LOAD RATINGS: 2000 ADJUSTED LOAD RATING: 1732 x0.8 = 1385
Seismic Brace Assembly Detail (Provide detail on plans)
SEE DETAIL 13/ FP6.2.

FASTENER INFORMATION
ORIENTATION OF CONNECTING SURFACE: NFPA Type I
TYPE: Through Bolt
DIAMTETER: 1/2 in.
LENGTH: 3 1/2 in.
MAXIMUM LOAD: 485 lbs.
NFPA 13: FIGURE 9.3.5.12.1

BRACE IDENTIFICATION NO. (TO BE USED ON PLANS) SB-3
X LATERAL BRACE | LONGITUDINAL BRACE

SEISMIC COEFFICIENT Cp= 0.65

DIAMETER	TYPE	LENGTH	TOTAL(FT)	WEIGHT PER FT	TOTAL WEIGHT
4 in.	Sch. 10 Steel		30.00	11.78	353.40
1 1/2 in.	Sch. 40 Steel		53.00	3.61	191.33
Total Weight of Water Filled Piping					544.73
Wp (Total weight of Water Filled Piping x 1.15 to account for valves and fittings)					626.44
HorixontalForce (NFPA 13 9.3.5.9.3) Fpw = Cp x Wp =					407.19

*Excludes tension-only bracing systems

IDENTIFICATION STAMP
DIV. OF THE STATE ARCHITECT
APP: 01-119994 INC:
REVIEWED FOR
SS ☑ FLS ☑ ACS ☑
DATE: 08/16/2022

QUATTROCCHI KWOK ARCHITECTS
Main:
636 Fifth Street, Santa Rosa, CA 95404
East Bay:
55 Harrison Street, Suite 525,
Oakland, CA 94607
(707) 576-0829

REGISTERED PROFESSIONAL ENGINEER
STEVEN E. RAWSON
No. M30657
EXP. JUNE 30, 2024
MECHANICAL
STATE OF CALIFORNIA

CEG JOB NO: 21125
CYPRESS Engineering Group
HVAC, Plumbing, Fire Protection
Building Commissioning
Industrial Refrigeration
Environmental Compliance
Training & Technical Support
831.218.1802
8 Harris Court, Suite A8
Monterey, CA 93940
cypresseg.com

LIBERTY HIGH SCHOOL

NEW CLASSROOM BUILDING

850 2ND STREET
BRENTWOOD, CA
94513

LIBERTY UNION HIGH SCHOOL DISTRICT

REVISIONS

DSA APP NO. 01-119994
ARCH PROJECT NO: 1925.00
DRAWN BY: SER
DRAWING SCALE: NONE
PTN: 61721-83 FILE NO: 7-H4
CONSTRUCTION DOCUMENTS
JUNE 24, 2022

SHEET TITLE
BRACING CALCULATIONS AND DETAILS - FIRE PROTECTION

SHEET NUMBER
FP-6.3

LIBERTY HS NEW CLASSROOM BUILDINGS - 221060 R20

ANCHORAGE NOTES

ELECTRICAL ANCHORAGE NOTES:

ALL ELECTRICAL COMPONENTS SHALL BE ANCHORED AND INSTALLED PER THE DETAILS ON THE DSA APPROVED CONSTRUCTION DOCUMENTS. THE FOLLOWING COMPONENTS SHALL BE ANCHORED OR BRACED TO MEET THE FORCE AND DISPLACEMENT REQUIREMENTS PRESCRIBED IN THE 2019 CBC SECTIONS 1617A.1.18 THROUGH 1617A.1.26 AND ASCE 7-16, CHAPTER 13, 26, AND 30.

1. ALL PERMANENT EQUIPMENT AND COMPONENTS.
2. TEMPORARY, MOVABLE OR MOBILE EQUIPMENT THAT IS PERMANENTLY ATTACHED (e.g. HARD WIRED) TO THE BUILDING UTILITY SERVICES SUCH AS ELECTRICITY, GAS OR WATER. "PERMANENTLY ATTACHED" SHALL INCLUDE ALL ELECTRICAL CONNECTIONS EXCEPT PLUGS FOR 110/220 VOLT RECEPTACLES HAVING A FLEXIBLE CABLE.
3. TEMPORARY, MOVABLE OR MOBILE EQUIPMENT WHICH IS HEAVIER THAN 400 POUNDS OR HAS A CENTER OF MASS LOCATED 4 FEET OR MORE ABOVE THE ADJACENT FLOOR OR ROOF LEVEL THAT DIRECTLY SUPPORT THE COMPONENT IS REQUIRED TO BE RESTRAINED IN A MANNER APPROVED BY DSA.

THE FOLLOWING ELECTRICAL COMPONENTS SHALL BE BE POSITIVELY ATTACHED TO THE STRUCTURE, BUT NEED NOT DEMONSTRATE DESIGN COMPLIANCE WITH THE REFERENCES NOTED ABOVE. THESE COMPONENTS SHALL HAVE FLEXIBLE CONNECTIONS PROVIDED BETWEEN THE COMPONENT AND ASSOCIATED CONDUIT. FLEXIBLE CONNECTIONS MUST ALLOW MOVEMENT IN BOTH TRANSVERSE AND LONGITUDINAL DIRECTIONS.

A. COMPONENT WEIGHING LESS THAN 400 POUNDS AND HAVING A CENTER OF MASS LOCATED 4 FEET OR LESS ABOVE THE ADJACENT FLOOR OR ROOF LEVEL THAT DIRECTLY SUPPORT THE COMPONENT.
B. COMPONENTS WEIGHING LESS THAN 20 POUNDS, OR IN THE CASE OF DISTRIBUTED SYSTEMS, LESS THAN 5 POUNDS PER FOOT, WHICH ARE SUSPENDED FROM A ROOF OR FLOOR OR HUNG FROM WALL.

THE ANCHORAGE OF ALL ELECTRICAL COMPONENTS SHALL BE SUBJECT TO THE APPROVAL OF THE DESIGN PROFESSIONAL IN GENERAL RESPONSIBLE CHARGE OR STRUCTURAL ENGINEER DELEGATED RESPONSIBILITY AND ACCEPTANCE BY DSA. THE PROJECT INSPECTOR WILL VERIFY THAT ALL COMPONENTS AND EQUIPMENT HAVE BEEN ANCHORED IN ACCORDANCE WITH THE ABOVE REQUIREMENTS.

ELECTRICAL DISTRIBUTION SYSTEM BRACING NOTE:

ELECTRICAL DISTRIBUTION SYSTEMS SHALL BE BRACED TO COMPLY WITH THE FORCES AND DISPLACEMENTS PRESCRIBED IN ASCE 7-16 SECTION 13.3 AS DEFINED IN ASCE 7-16 SECTION 13.6.5, 13.6.6, 13.6.7, 13.6.8, AND 2019 CBC, SECTIONS 1617A.1.24, 1617A.1.25, AND 1617A.1.26.

THE METHOD OF SHOWING BRACING AND ATTACHMENTS TO THE STRUCTURE FOR THE IDENTIFIED DISTRIBUTION SYSTEM ARE AS NOTED BELOW. WHEN BRACING AND ATTACHMENTS ARE BASED ON A PREAPPROVED INSTALLATION GUIDE (eg., OSHPD OPM FOR 2013 CBC OR LATER), COPIES OF THE BRACING SYSTEM INSTALLATION GUIDE OR MANUAL SHALL BE AVAILABLE ON THE JOBSITE PRIOR TO THE START OF AND DURING THE HANGING AND BRACING OF THE DISTRIBUTION SYSTEMS. THE STRUCTURAL ENGINEER OF RECORD SHALL VERIFY THE ADEQUACY OF THE STRUCTURE TO SUPPORT THE HANGER AND BRACE LOADS.

ELECTRICAL DISTRIBUTION SYSTEMS ARE:
[X] - OPTION 1: DETAILED ON THE APPROVED DRAWINGS WITH PROJECT SPECIFIC NOTES AND DETAILS.
[ ] - OPTION 2: SHALL COMPLY WITH THE APPLICABLE OSHPD PRE-APPROVAL (OPM #).

LIGHT FIXTURES:

ALL LIGHT FIXTURES SHALL BE POSITIVELY ATTACHED TO THE CEILING SUSPENSION SYSTEMS BY MECHANICAL MEANS TO RESIST A HORIZONTAL FORCE EQUAL TO THE WEIGHT OF THE FIXTURE. A MINIMUM OF TWO SCREWS OR APPROVED FASTENERS ARE REQUIRED AT EACH LIGHT FIXTURE, PER ASTM E580, SECTION 5.3.1.

SURFACE-MOUNTED LIGHT FIXTURES SHALL BE ATTACHED TO THE MAIN RUNNER WITH AT LEAST TWO POSITIVE CLAMPING DEVICES. THE CLAMPING DEVICE SHALL COMPLETELY SURROUND THE SUPPORTING CEILING RUNNER AND BE MADE OF STEEL WITH A MINIMUM THICKNESS OF #14 GAGE. ROTATIONAL SPRING CATCHES DO NOT COMPLY. A #12 GAGE SLACK SAFETY WIRE SHALL BE CONNECTED FROM EACH CLAMPING DEVICE TO THE STRUCTURE ABOVE. PROVIDE ADDITIONAL SUPPORTS WHEN LIGHT FIXTURES ARE EIGHT (8) FEET OR LONGER OR EXCEED 56 LB. MAXIMUM SPACING BETWEEN SUPPORTS SHALL NOT EXCEED EIGHT (8) FEET.

LIGHT FIXTURES WEIGHING LESS THAN OR EQUAL TO 10 LB. SHALL HAVE A MINIMUM OF ONE (1) #12 GAGE SLACK SAFETY WIRE CONNECTED FROM THE FIXTURE HOUSING TO THE STRUCTURE ABOVE.

LIGHT FIXTURES WEIGHING GREATER THAN 10 LB. BUT LESS THAN OR EQUAL TO 56 LBS. MAY BE SUPPORTED DIRECTLY ON THE CEILING RUNNERS, BUT THEY SHALL HAVE A MINIMUM OF TWO (2) #12 GAGE SLACK SAFETY WIRES CONNECTED FROM THE FIXTURE HOUSING AT DIAGONAL CORNERS TO THE STRUCTURE ABOVE. EXCEPTION: ALL LIGHT FIXTURES GREATER THAN TWO BY FOUR FEET WEIGHING LESS THAN 56 LBS. SHALL HAVE A #12 GAGE SLACK SAFETY WIRE AT EACH CORNER.

ALL LIGHT FIXTURES WEIGHING GREATER THAN 56 LB. SHALL BE INDEPENDENTLY SUPPORTED BY NOT LESS THAN FOUR (4) TAUT #12 GAGE HANGER WIRES (ONE AT EACH CORNER) ATTACHED FROM THE FIXTURE HOUSING TO THE STRUCTURE ABOVE OR OTHER APPROVED HANGERS. THE FOUR (4) TAUT #12 GAGE WIRES OR OTHER APPROVED HANGERS, INCLUDING THEIR ATTACHMENT TO THE STRUCTURE ABOVE, SHALL BE CAPABLE OF SUPPORTING FOUR (4) TIMES THE WEIGHT OF THE FIXTURE.

GENERAL DEMOLITION NOTES

1. THE CONTRACTOR SHALL VERIFY IN THE FIELD ALL LINES, LEVELS, DIMENSIONS AND EXISTING CONDITIONS. THE INFORMATION ON THE DRAWINGS REGARDING EXISTING ELECTRICAL EQUIPMENT AND BRANCH CIRCUITS IS THE RESULT OF FIELD SURVEY AND IS ACCURATE TO THE BEST OF OUR KNOWLEDGE. IT IS INTENDED, HOWEVER, AS A GUIDE FOR USE IN VERIFICATION ONLY.
2. ANY EXISTING ELECTRICAL EQUIPMENT IN THE AREA OF NEW CONSTRUCTION NOT SHOWN ON THE EXISTING PLANS SHALL BE DOCUMENTED AND SUBMITTED TO THE ENGINEER FOR DETERMINATION OF ACTION REQUIRED.
3. WHEREVER THE REMOVAL OF EXISTING ELECTRICAL EQUIPMENT IS CALLED FOR AND ALL EQUIPMENT ON A PARTICULAR BRANCH CIRCUIT IS TO BE REMOVED, ALL CONDUIT AND WIRE BACK TO THE PANEL SHALL BE ENTIRELY REMOVED AND THE CIRCUIT IN PANEL SHALL BE MARKED "SPARE". THIS APPLIES TO SIGNAL AND COMMUNICATIONS SYSTEMS EQUIPMENT, CONDUIT, AND WIRE AS WELL.
4. WHEREVER THE REMOVAL OF EXISTING ELECTRICAL EQUIPMENT IS CALLED FOR AND ALL EQUIPMENT ON A PARTICULAR BRANCH CIRCUIT IS NOT TO BE REMOVED, THE CIRCUIT SHALL BE MAINTAINED CONTINUOUS TO THE EXISTING EQUIPMENT IN USE WITH MINIMUM INTERRUPTIONS OF POWER. THIS APPLIES TO SIGNAL AND COMMUNICATIONS SYSTEMS EQUIPMENT, CONDUIT, AND WIRE AS WELL.
5. WHENEVER THE REMOVAL OF EXISTING CONSTRUCTION REVEALS ELECTRICAL WORK THAT IS TO REMAIN, BUT IS IN CONFLICT WITH NEW CONSTRUCTION, RELOCATE THE EXISTING ELECTRICAL WORK AS NECESSARY TO AVOID ANY CONFLICT. RELOCATION WORK SHALL BE DONE TO MINIMIZE ANY INTERRUPTIONS OF POWER.
6. CARE SHALL BE TAKEN IN ORDER TO IDENTIFY AND PROTECT ALL EXISTING ELECTRICAL WORK THAT IS TO REMAIN.
7. ENSURE RECONNECTION OF EXISTING DEVICES WHOSE CIRCUITS HAVE BEEN INTERRUPTED BY DEMOLITION BY PROVIDING NEW CONNECTION TO ANOTHER EXISTING TO REMAIN DEVICE OR PANEL.
8. ALL EXISTING ELECTRICAL EQUIPMENT SHOWN ON THE PLANS FOR NEW WORK ARE THOSE WHICH ARE TO BE REUSED DURING SOME PHASE OF THE NEW CONSTRUCTION OR REQUIRE SOME SPECIAL CONSIDERATIONS.
9. WHENEVER THE REMOVAL OF EXISTING ELECTRICAL PANELBOARDS ARE CALLED FOR AND ALL EXISTING BRANCH CIRCUITS ARE NOT TO BE REMOVED, THE EXISTING BRANCH CIRCUITS SHALL BE CONNECTED TO OTHER EXISTING ELECTRICAL EQUIPMENT OR PANELS STILL IN USE WITH MINIMUM INTERRUPTIONS OF POWER. ALSO, IF REQUIRED, THESE SAME BRANCH CIRCUITS SHALL BE RECONNECTED TO RELOCATED EXISTING OR NEW PANELBOARDS AS PART OF THE NEW CONSTRUCTION. THIS APPLIES TO SIGNAL AND COMMUNICATIONS SYSTEMS EQUIPMENT, CONDUIT AND WIRE AS WELL.
10. THE ELECTRICAL CONTRACTOR SHALL REVISE EXISTING PANEL SCHEDULES TO CORRESPOND TO ACTUAL CONDITIONS AFTER ALL DEMOLITION AND NEW WORK IS COMPLETED.
11. REMOVE ALL ABANDONED CONDUIT AND WIRE ABOVE CEILINGS.
12. WHEN ELECTRICAL EQUIPMENT OR DEVICE IS REMOVED FROM AN EXISTING WALL OR CEILING WHICH IS TO REMAIN, PATCH ABANDONED OPENINGS TO MATCH EXISTING FINISH.
13. IN GENERAL, THE DEMOLITION PLANS SHOW ALL EXISTING EQUIPMENT THAT IS TO BE REMOVED UNLESS NOTED OTHERWISE. HOWEVER, ELECTRICAL EQUIPMENT, WHETHER SHOWN ON THIS DRAWING OR NOT, WHERE LOCATED IN THE AREA SCHEDULED TO BE DEMOLISHED, SHALL BE REMOVED COMPLETELY (INCLUDING CONDUIT AND WIRES BACK TO THE LAST REMAINING FIXTURE, OUTLET, DEVICE, ETC.) UNLESS OTHERWISE NOTED. COORDINATE DEMOLITION WORK WITH ARCHITECT AND GENERAL CONTRACTOR.
14. EXISTING CONDUIT FEEDS UP THROUGH FLOOR SHALL BE CUT OFF AND PLUGGED FLUSH WITH FLOOR WHERE EXISTING WALLS, ETC., ARE REMOVED. REMOVE CONDUCTORS FROM THE POINT BACK TO LAST OUTLET REMAINING IN SERVICE.
15. IT SHALL BE THE RESPONSIBILITY OF THIS CONTRACTOR TO MAINTAIN CONTINUITY OF ALL ELECTRICAL SYSTEMS, EQUIPMENT, ETC. REMAINING IN OPERATION WHICH IS BEING FED BY AN ABANDONED OUTLET. MAINTAINING CONTINUITY SHALL CONSIST OF REROUTING OF CONDUIT, WIRE, ETC. AS REQUIRED.
16. IT SHALL BE THIS CONTRACTOR'S RESPONSIBILITY TO VERIFY LOCATIONS OF EXISTING CIRCUITS AND ADJUST CIRCUIT NUMBERS ACCORDING TO EXISTING CONDITIONS IF REQUIRED
17. THE ELECTRICAL CONTRACTOR SHALL COORDINATE WITH THE OWNER PRIOR TO REMOVAL OF EXISTING ELECTRICAL EQUIPMENT AND TURN OVER REMOVED EQUIPMENT THAT THE OWNER REQUESTS, IN AS-FOUND CONDITION. EQUIPMENT THAT IS TO BE TURNED OVER SHALL BE BOXED AND TAGGED TO IDENTIFY THE SPECIFIC EQUIPMENT. EQUIPMENT TO BE TEMPORARILY REMOVED DUE TO THE CONSTRUCTION SHALL BE CLEANED AND RE-INSTALLED IN ITS ORIGINAL CONDITION OR AS REQUIRED.
18. WHERE EXISTING WALLS HAVE BEEN REMOVED, AND THERE ARE EXISTING CONDUIT FEEDS WHICH HAVE BEEN CUT OFF AND CAPPED FLUSH WITH THE FLOOR, IT IS THE CONTRACTOR'S RESPONSIBILITY TO IDENTIFY AND DIMENSION ALL SUCH CONDUITS ON THE "AS-BUILT" DRAWINGS.
19. IF ANY EQUIPMENT THAT IS SCHEDULED TO REMAIN IN OPERATION IS DAMAGED BY THE CONTRACTOR, IT SHALL BE REPLACED TO ITS ORIGINAL CONDITION SATISFACTORY TO THE OWNER AT CONTRACTOR'S EXPENSE.

ABBREVIATIONS

AFF	ABOVE FINISHED FLOOR
AFG	ABOVE FINISHED GRADE
C	CONDUIT
CATV	CABLE TV
CB	CIRCUIT BREAKER
CO	CONDUIT ONLY
CU	COPPER
E.C.	ELECTRICAL CONTRACTOR
E.G.C.	EQUIPMENT GROUNDING CONDUCTOR
EM	EMERGENCY
EMS	ENERGY MANAGEMENT SYSTEM
EQPT	EQUIPMENT
EXT	EXTERIOR
(E)	EXISTING
(ER)	EXISTING EQUIPMENT TO BE RELOCATED
(EX)	EXISTING EQUIPMENT TO BE DEMOLISHED
FA	FIRE ALARM
FMC	FLEXIBLE METALLIC CONDUIT
FO	FIBER OPTIC
FTL	FEED THROUGH LUGS
G.E.C.	GROUNDING ELECTRODE CONDUCTOR
GFI	GROUND FAULT CIRCUIT INTERRUPTING TYPE RECEPTACLE
INV	EMERGENCY LIGHTING INVERTER
L	LOCKABLE
LTG	LIGHTING
LV	LOW VOLTAGE
MC	METAL CLAD CABLING
MCB	MAIN CIRCUIT BREAKER
MDF	MAIN DISTRIBUTION FRAME
MFGR	MANUFACTURER
MLO	MAIN LUGS ONLY
MTD	MOUNTED
(N)	NEW
N.E.C.	NATIONAL ELECTRICAL CODE
NEU	NEUTRAL
NIEC	NOT IN ELECTRICAL CONTRACT
OAH	OVERALL HEIGHT
OFCI	OWNER FURNISHED, CONTRACTOR INSTALLED
P	INDICATES FIXTURES ON PHOTOCELL CONTROL
PA	PUBLIC ADDRESS
PNL	PANEL
S.A.D.	SEE ARCHITECTURAL DRAWINGS
SIG	SIGNAL SYSTEM
SPD	SURGE PROTECTION DEVICE
STC	SIGNAL TERMINAL CABINET
TELE	TELEPHONE
UFER	CONCRETE ENCASED CU G.E.C.
UON	UNLESS OTHERWISE NOTED
UG	UNDERGROUND
VAV	VAV BOX, SEE MECHANICAL DIVISION DRAWINGS FOR LOCATIONS. PROVIDE TOGGLE TYPE DISCONNECT SWITCH.
WP	WEATHER PROOF, NEMA 3R. EQUALS "WHILE IN USE" TYPE WHEN APPLIED TO EXTERIOR POWER RECEPTACLES
XFMR	TRANSFORMER

GENERAL ELECTRICAL NOTES

1. PRIOR TO BID THE CONTRACTOR SHALL VISIT THE SITE TO ADEQUATELY DETERMINE ALL PRE-EXISTING CONDITIONS. BY THE ACT OF SUBMITTING A BID, THE CONTRACTOR WILL BE DEEMED TO HAVE COMPLIED WITH THE FOREGOING, TO HAVE ACCEPTED SUCH CONDITIONS, AND TO HAVE MADE ALLOWANCES THEREFORE IN PREPARING THE BID.
2. PROVIDE PARITY SIZED GREEN GROUND WIRE IN ALL POWER CONDUITS, BRANCH CIRCUITS (LIGHTING & POWER) AND HOMERUNS. PROVIDE ADDITIONAL ISOLATED GROUND, GREEN WITH YELLOW STRIPE, TO ALL ISOLATED GROUND RECEPTACLES.
3. PROVIDE PULLROPE IN ALL EMPTY CONDUITS THROUGHOUT THE PROJECT.
4. REFER TO ARCHITECTURAL PLANS AND ELEVATIONS FOR EXACT LOCATION & CONNECTION REQUIREMENTS OF ALL LUMINAIRE(S) AND ALL OUTLET, SWITCH, AND ELECTRICAL RELATED DEVICE MOUNTING HEIGHTS AND LOCATIONS. COORDINATE LOCATIONS OF ALL LUMINAIRE(S) AND JUNCTION BOXES WITH MECHANICAL DIVISION PRIOR TO ROUGH-IN. COORDINATE LOCATIONS OF ELECTRICAL DEVICES WITH FURNITURE PLANS PRIOR TO ROUGH-IN.
5. REFER TO MECHANICAL PLANS FOR EXACT LOCATION(S) OF ALL MECHANICAL EQUIPMENT, AND CONFIRM EXACT CONNECTION REQUIREMENTS OF ALL MECHANICAL EQUIPMENT WITH MECHANICAL DIVISION, PRIOR TO ROUGH-IN. VERIFY EXACT REQUIREMENTS FOR VOLTAGE, PHASE, HORSE-POWER, OR KVA RATINGS, OF ALL MECHANICAL DIVISION EQUIPMENT REQUIRING ELECTRICAL CONNECTION.
6. VERIFY EXACT CONNECTION REQUIREMENTS, OUTLET TYPE(S), MOUNTING HEIGHT(S) AND LOCATION(S) OF ALL OWNER-SUPPLIED EQUIPMENT, AND ALL EQUIPMENT PROVIDED UNDER OTHER SECTIONS OF THE SPECIFICATIONS, PRIOR TO ROUGH-IN. REFER TO ARCHITECTURAL DRAWINGS FOR EQUIPMENT LOCATIONS.
7. COORDINATE TRENCHING WITH OWNER AND OTHER TRADES BEFORE BEGINNING WORK.
8. ALL CONDUIT PENETRATIONS THROUGH FIRE-RATED WALLS AND FLOORS SHALL BE SEALED AND EQUIPPED WITH U.L. LISTED FIRE PENETRATION ASSEMBLIES TO MAINTAIN FIRE SEPARATION RATING.
9. DO NOT INSTALL ANY OUTLETS BACK TO BACK IN STUD WALLS OR DE-MOUNTABLE PARTITIONS.
10. THE CONTRACTOR SHALL VERIFY ALL CEILING TYPES BEFORE ORDERING OF LUMINAIRE(S). ALSO VERIFY THAT ALL FEATURES CALLED FOR IN LUMINAIRE DESCRIPTIONS ON THE LUMINAIRE SCHEDULE ARE INCLUDED WITH CATALOG NUMBERS LISTED ON THE LUMINAIRE SCHEDULE WHEN LUMINAIRE ORDERS ARE PLACED, AND ARE INCLUDED AS PART OF THE LIGHTING SUBMITTALS FOR THIS PROJECT. IF A DISCREPANCY EXISTS, CONTACT THE ARCHITECT AND ELECTRICAL ENGINEER FOR CLARIFICATION PRIOR TO BID.
11. CIRCUITRY AND CONDUIT ROUTING SHOWN ON THE PLANS IS DIAGRAMMATIC ONLY. THIS CONTRACTOR IS RESPONSIBLE FOR BECOMING COMPLETELY FAMILIAR WITH THE ARCHITECTURAL AND STRUCTURAL CONDITIONS AND LIMITATIONS IN THE BUILDING AND TO PROVIDE ALL LABOR, TOOLS AND MATERIALS REQUIRED TO PRODUCE A COMPLETELY CONCEALED INSTALLATION WHEREVER INDICATED ON THE PLANS.
12. MAINTAIN "AS-BUILT" RECORDS AT ALL TIMES, SHOWING EXACT LOCATION OF ALL UNDERGROUND AND/OR CONCEALED CONDUITS AND SERVICES INSTALLED UNDER THIS CONTRACT, INCLUDING CIRCUIT IDENTIFICATION WHERE APPLICABLE. PROVIDE OWNER WITH "AS-BUILT" DOCUMENTS AS INDICATED IN THE SPECIFICATIONS, AND/OR CALLED FOR IN THE SPECIFICATIONS.
13. DRAWINGS INDICATE THE LOCATION(S) OF DEVICES, LUMINAIRE(S) AND EQUIPMENT, AND THE CIRCUIT NUMBER AND PANEL DESIGNATED TO SUPPLY THEM. THE CONTRACTOR SHALL BE RESPONSIBLE FOR COMPLETELY CONNECTING ALL ELECTRICAL DEVICES TO CIRCUITS INDICATED ON THE DRAWINGS.
14. UNLESS OTHERWISE NOTED, ALL WORK SHOWN ON DRAWINGS IS NEW AND TO BE PROVIDED AND INSTALLED COMPLETE UNDER THIS CONTRACT.
15. ALL EQUIPMENT GROUNDING SHALL CONFORM TO ARTICLE 250 OF THE NATIONAL ELECTRICAL CODE, LATEST EDITION.
16. ALL EXTERIOR CONDUIT ABOVE GRADE, INCLUDING ALL ROOF MOUNTED CONDUIT, SHALL BE GALVANIZED RIGID STEEL. COAT ALL EXPOSED THREADS WITH GALVANIZING PAINT. PAINT ALL SURFACE MOUNTED RACEWAYS AND PULLBOXES TO MATCH SURROUNDING CONDITIONS, AS DIRECTED BY THE ARCHITECT.
17. ALL ELECTRICAL WORK SHALL BE CARRIED OUT IN ACCORDANCE WITH THE LATEST EDITION OF THE N.E.C., AS WELL AS STATE, AND LOCAL CODES AND REQUIREMENTS.
18. ALL CONDUIT SHALL BE CONCEALED, UNLESS OTHERWISE NOTED.
19. THE CONTRACTOR SHALL BE RESPONSIBLE TO VERIFY THE AVAILABLE SHORT CIRCUIT CURRENT AT THE MAIN SWITCHBOARD INCOMING TERMINALS WITH THE UTILITY COMPANY, AND TO VERIFY THAT ALL POWER AND SIGNAL SERVICE PROVISIONS, INCLUDING CONCRETE EQUIPMENT PADS, CONDUITS, PULLBOXES AND CLEARANCES, MEET THE UTILITY COMPANY'S REQUIREMENTS, PRIOR TO INSTALLATION.
20. EQUIPMENT OVERLOADS AND FUSES SHALL BE PROVIDED AND INSTALLED AS PER NAME PLATE ON THE EQUIPMENT ACTUALLY PROVIDED.

GENERAL ELECTRICAL NOTES

21. THE CONTRACTOR SHALL PAY FOR ALL REQUIRED PERMITS AND INSPECTION FEES.
22. THE CONTRACTOR SHALL VERIFY ALL CRITICAL DIMENSIONS WITH THE ARCHITECTURAL DRAWINGS PRIOR TO ROUGH-IN.
23. ALL EXIT SIGNS SHALL COMPLY WITH THE RELEVANT PORTIONS OF SECTIONS 1008 AND 1013 OF THE CBC.
24. ALL MECHANICAL DIVISION EQUIPMENT LOW VOLTAGE CONTROL WIRING AND RACEWAY SHALL BE PROVIDED AND INSTALLED AS SPECIFIED IN MECHANICAL DIVISION U.O.N.
25. COORDINATE INSTALLATION OF ALL RECESSED LUMINAIRE(S) WITH MECHANICAL DIVISION PRIOR TO INSTALLATION OF HVAC DUCTS AND SPRINKLER HEADS. ENSURE AFTER INSTALLATION OF LUMINAIRE(S) THAT THERE IS NO CONTACT BETWEEN DUCTS AND LUMINAIRE(S) TO AVOID VIBRATION IN LUMINAIRE(S).
26. USE FLEXIBLE CONDUIT FOR ALL MOTOR, TRANSFORMER, RECESSED LUMINAIRE CONNECTIONS, AND CONNECTIONS BETWEEN TWO SEPARATE STRUCTURES AND FOR ALL FINAL CONNECTIONS TO "CRITICAL EQUIPMENT" AS DEFINED IN SPECIFICATIONS. MINIMUM 1/2" DIAMETER, LIQUID TIGHT TYPE USED OUTDOORS AND IN ALL WET LOCATIONS; PROVIDE WITH CODE-SIZE (MINIMUM #12) BARE GROUND WIRE IN ALL FLEXIBLE CONDUIT.
27. PROVIDE A DEDICATED NEUTRAL CONDUCTOR FOR ALL BRANCH CIRCUITS FEEDING OUTLETS AS NOTED ON THE DRAWINGS.
28. FOR FLUSH MOUNTED PANELBOARDS THE CONTRACTOR SHALL STUB A MINIMUM OF FOUR (4) 3/4" CONDUITS FROM THE PANEL UP INTO THE ACCESSIBLE CEILING ABOVE FOR FUTURE CIRCUITS.
29. ALL CONDUIT CONNECTORS TO OUTLET OR JUNCTION BOXES SHALL HAVE INSULATED THROATS (MANUFACTURED AS AN INTEGRAL PART OF THE CONNECTOR). AFTER-MARKET INSERTABLE THROATS ARE NOT ACCEPTABLE.
30. ALL CIRCUITS IN ALL JUNCTION BOXES AND DEVICES SHALL BE CLEARLY IDENTIFIED BY MEANS OF "EZ" NUMBERING TAGS OR EQUIVALENT, TO IDENTIFY THE CIRCUIT NUMBER OR RELAY SUPPLYING THE CONDUCTOR. ALL JUNCTION BOXES SHALL BE LABELED PER SPECIFICATIONS.
31. ALL SURFACE MOUNTED POWER AND SIGNAL BOXES IN FINISHED AREAS SHALL BE "WIREMOLD" TYPE, WITH MATCHING RACEWAYS. SURFACE MOUNTED STEEL JUNCTION BOXES AND/OR EMT ARE NOT ACCEPTABLE.
32. ALL LOCATIONS OF BARE METAL SURFACE MOUNTED CONDUIT, BOXES, PANEL COVERS, AND RELATED FITTINGS OR ACCESSORIES INSTALLED IN FINISHED AREAS (BOTH INTERIOR AND EXTERIOR) SHALL BE FINISH PAINTED TO MATCH THE SURFACE TO WHICH THEY ARE MOUNTED TO (AFTER INSTALLATION). PAINTING SHALL INCLUDE DIFFERENT COLORS AS REQUIRED TO MATCH EXISTING STRIPING OR OTHER BUILDING FEATURES TO WHICH THE EQUIPMENT IS ATTACHED AND VISIBLE. VERIFY EXACT JUNCTION BOX LOCATION(S) AND ROUTING OF EXPOSED RACEWAYS WITH THE ARCHITECT PRIOR TO ROUGH-IN.
33. PROVIDE A BLANK COVER PLATE (COLOR TO MATCH ADJACENT DEVICES OR AS SPECIFICALLY CALLED FOR IN SPECIFICATIONS) FOR ALL JUNCTION BOXES (NEW AND EXISTING) ON THE PROJECT WHEN NO DEVICE IS INSTALLED.
34. FOR OUTDOOR 15 AND 20-AMPERE, 125 AND 250-VOLT RECEPTACLES: RECEPTACLES LOCATED IN "WET" LOCATIONS SHALL HAVE "IN-USE" TYPE WEATHERPROOF COVER PLATES PROVIDED AND INSTALLED; RECEPTACLES LOCATED IN "DAMP" LOCATIONS SHALL HAVE "IN-USE" TYPE WEATHERPROOF COVER PLATES IN LOCATIONS DEEMED TO BE "IN-USE" WITH CORD AND PLUG ATTACHED.
35. TWO OR THREE DIFFERENT PHASES SUPPLIED BY A 3-PHASE PANEL MAY SHARE A SINGLE NEUTRAL ONLY IF CIRCUIT POSITIONS ARE ADJACENT IN THE PANEL. PROVIDE COMMON HANDLE-TIE ON BREAKERS FOR MULTI-WIRE BRANCH CIRCUITS, WITH COMMON NEUTRAL, PER NEC REQUIREMENTS.

SHEET INDEX

E-0.1	GENERAL NOTES, LIST OF DRAWINGS
E-0.2	ELECTRICAL SYMBOLS LIST & LUMINAIRE SCHEDULE
E-1.0	SITE PLAN OVERALL ELECTRICAL
E-1.1	SITE PLAN ELECTRICAL
E-1.2	SITE PLAN LIGHTING
E-A2.1	FIRST FLOOR PLAN BLDG. A LIGHTING
E-A2.2	SECOND FLOOR PLAN BLDG. A LIGHTING
E-B2.1	FLOOR PLAN BLDG. B LIGHTING
E-A3.1	FIRST FLOOR PLAN BLDG. A POWER & SIGNAL
E-A3.2	SECOND FLOOR PLAN BLDG. A POWER & SIGNAL
E-B3.1	FLOOR PLAN BLDG. B POWER & SIGNAL
E-A4.1	FIRST FLOOR PLAN BLDG. A MECH/PLUM CONNECTIONS
E-A4.2	SECOND FLOOR PLAN BLDG A. MECH/PLUM CONNECTIONS
E-A4.3	ROOF PLAN BLDG A. MECH/PLUM CONNECTIONS
E-B4.1	FLOOR PLAN BLDG B. MECH/PLUM CONNECTIONS
E-B4.2	ROOF PLAN BLDG. B MECH/PLUM CONNECTIONS
E-5.1	SINGLE LINE DIAGRAMS
E-5.2	SINGLE LINE DIAGRAMS
E-5.3	SINGLE LINE DIAGRAMS
E-5.4	SINGLE LINE DIAGRAMS
E-6.1	PANEL SCHEDULES
E-7.1	DETAILS
E-7.2	DETAILS
E-7.3	DETAILS
E-7.4	DETAILS
E-7.5	DETAILS
FE-0.1	FIRE ALARM EQUIPMENT LIST, GENERAL NOTES, & DETAILS
FE-1.1	SITE PLAN - FIRE ALARM
FE-A-3.1	FIRST FLOOR PLAN BLDG. A FIRE ALARM
FE-A-3.2	SECOND FLOOR PLAN BLDG. A FIRE ALARM
FE-B-3.1	FLOOR PLAN BLDG B. FIRE ALARM
FE-5.1	FIRE ALARM RISER DIAGRAM
FE-6.1	FIRE ALARM CALCULATIONS

IDENTIFICATION STAMP
DIV. OF THE STATE ARCHITECT
APP: 01-119994 INC:
REVIEWED FOR
SS ☑ FLS ☑ ACS ☑
DATE: 08/16/2022

QUATTROCCHI KWOK ARCHITECTS
Main:
636 Fifth Street, Santa Rosa, CA 95404
East Bay:
55 Harrison Street, Suite 525,
Oakland, CA 94607
(707) 576-0829

O'MAHONY & MYER
ELECTRICAL ENGINEERING & LIGHTING DESIGN
4340 REDWOOD HWY., SUITE 245
SAN RAFAEL, CALIFORNIA 94903
(415) 492-0420/FAX (415) 479-9662

REGISTERED PROFESSIONAL ENGINEER
PETER J. COLENBRANDER
No. 14738
Exp. 6/23
ELECTRICAL
STATE OF CALIFORNIA

LIBERTY HIGH SCHOOL

NEW CLASSROOM BUILDING

850 2ND STREET
BRENTWOOD, CA
94513

LIBERTY UNION
HIGH SCHOOL
DISTRICT

DSA APP NO. 01-119994

ARCH PROJECT NO: 1719.00
DRAWN BY: JK
DRAWING SCALE: AS NOTED
PTN: 61721-83 FILE NO: 7-H4

CONSTRUCTION DOCUMENTS

JUNE 24, 2022

SHEET TITLE

GENERAL NOTES, LIST OF DRAWINGS

SHEET NUMBER

E-0.1

LIBERTY HS NEW CLASSROOM BUILDINGS - 221060 R20

LUMINAIRE SCHEDULE

TYPE	MOUNTING	DESCRIPTION	MANUFACTURER CATALOG NUMBER	LIGHT SOURCE	POWER SUPPLY	VOLT	INPUT WATTS	REMARKS
AA2	CEILING SUSPENDED	CABLE SUSPENDED NARROW LINEAR LED WITH DIRECT/INDIRECT DISTRIBUTION (66%U/34%D). EXTRUDED ALUMINUM HOUSING. DIE CAST ALUMINUM FLAT END CAPS. DIE FORMED CRS REFLECTORS. WIDE SPREAD INDIRECT OPTICS, FLUSH BOTTOM LENS. FULLY ADJUSTABLE AIRCRAFT CABLE SUSPENSION. STANDARD WHITE FINISH. 8'L X 2.5"H X 2.5"D. WEIGHT: 2.9 LBS/FT.	FINELITE HP-X-P-ID-8'-H-S-835-WSO-F-277V-SC-FC-1%-FA50-VERIFY CEILING TYPE-FE-SW	3500K LED 80 CRI 4865 LM/4'	0-10V 1-100% DIMMING	277V	80W	
AA4	CEILING SUSPENDED	SIMILAR TO TYPE AA2 EXCEPT 16' LONG.	FINELITE HP-X-P-ID-16'-H-S-835-WSO-F-277V-SC-FC-1%-FA50-VERIFY CEILING TYPE-FE-SW	3500K LED 80 CRI 4865 LM/4'	0-10V 1-100% DIMMING	277V	160W	
AA5	CEILING SUSPENDED	SIMILAR TO TYPE AA2 EXCEPT 20' LONG.	FINELITE HP-X-P-ID-20'-H-B-835-WSO-F-277V-SC-FC-1%-FA50-VERIFY CEILING TYPE-FE-SW	3500K LED 80 CRI 4865 LM/4'	0-10V 1-100% DIMMING	277V	200W	
AA7	CEILING SUSPENDED	SIMILAR TO TYPE AA2 EXCEPT 28' LONG.	FINELITE HP-X-P-ID-28'-H-B-835-WSO-F-277V-SC-FC-1%-FA50-VERIFY CEILING TYPE-FE-SW	3500K LED 80 CRI 4865 LM/4'	0-10V 1-100% DIMMING	277V	280W	
AB1	SURFACE WALL	4' LONG LED OVER MIRROR LUMINAIRE WITH EXTRUDED ALUMINUM LINEAR HOUSING, DIECAST ALUMINUM ENDCAPS, 'WRAP-AROUND' CONTINUOUS ACRYLIC DIFFUSER.	LITECONTROL 67L-W-D-4-(FINISH)-35K-D060-NDM-UNV	3500K LED 80 CRI 2400 LUMENS	NON-DIM	UNV	19W	
AB2	SURFACE WALL	SIMILAR TO TYPE AB1 EXCEPT WITH 6' LENGTH.	LITECONTROL 67L-W-D-6-(FINISH)-35K-D060-NDM-UNV	3500K LED 80 CRI 3600 LUMENS	NON-DIM	UNV	29W	
AB3	SURFACE WALL	SIMILAR TO TYPE AB1 EXCEPT WITH 8' LENGTH.	LITECONTROL 67L-W-D-8-(FINISH)-35K-D060-NDM-UNV	3500K LED 80 CRI 4800 LUMENS	NON-DIM	UNV	38W	
AC1	SURFACE CEILING	LED STRIPLIGHT WITH FORMED STEEL CONSTRUCTION HOUSING. ROUND DIFFUSE ACRYLIC LENS. SURFACE MOUNTED, VERIFY CEILING MOUNTING WITH ARCHITECT. STANDARD FINISH AS SELECTED BY ARCHITECT. 4' LONG.	H.E. WILLIAMS 75R-4-L30-835-VERIFY MOUNTING-DRV-UNV	3500K LED 80CRI 2916 LM/4'	NON-DIM	UNV	20W	
AC2	CEILING SUSPENDED	SIMILAR TO TYPE AC1 EXCEPT WITH 8' LENGTH AND PENDANT MOUNTED.	H.E. WILLIAMS 75R-8-L30-835-VERIFY MOUNTING-DRV-UNV ACF/ACJ-CEILING-LENGTH	3500K LED 80CRI 2916 LM/4'	NON-DIM	UNV	40W	
AC3	CEILING SUSPENDED	SIMILAR TO TYPE AC1 EXCEPT WITH 4' LENGTH AND PENDANT MOUNTED.	H.E. WILLIAMS 75R-4-L30-835-VERIFY MOUNTING-DRV-UNV ACF/ACJ-CEILING-LENGTH	3500K LED 80CRI 2916 LM/4'	NON-DIM	UNV	20W	
AD1	SURFACE WALL	WALL MOUNTED DIRECT/INDIRECT LINEAR LUMINAIRE WITH EXTRUDED 6061-T6 ALUMINUM CONSTRUCTION HOUSING. ASYMMETRIC UPLIGHT DISTRIBUTION WITH FLUSH OPAL WHITE DIFFUSER DOWNLIGHT. 96LG WHITE POWDER COAT PAINTED INTERNAL REFLECTOR. FLAT END CAPS. INDEPENDENT UP/DOWNLIGHT CONTROL CHANNELS. 4" H X 2.75" D X 8' LENGTH. WHITE, BLACK, OR SATIN ALUMINUM POWDER COATED PAINT FINISH TO BE DETERMINED BY THE ARCHITECT.	FINELITE HP-2-WM-ID-8'-B-S-830-ASY-F-96LG-277V-DC-FC-1%-MB-FE-FINISH	3000K LED 80 CRI 3745 LM/4'	0-10V DIMMING (100% - 1%)	277V	64W	
AE1	RECESSED	RECESSED LED WALLWASHER WITH WIDE DISTRIBUTION AND FORMED STEEL CONSTRUCTION HOUSING, 4" DIA. APERTURE SELF FLANGED, LIGHTLY DIFFUSED, CLEAR ALZAK REFLECTOR. 2" MAX. CEILING THICKNESS, 5" NOMINAL DEPTH.	SIGNIFY LIGHTOLIER 4R-N C4L-15-8-35-W-Z10-U C4-R-WW-CC-P	3500K LED 80 CRI 1500 LM	0-10V DIMMING 100-10% RANGE	UNV	16W	
AE2	RECESSED	SIMILAR TO TYPE AE1 EXCEPT WITH DOWNLIGHT DISTRIBUTION.	SIGNIFY LIGHTOLIER 4R-N C4L-15-8-35-W-Z10-U C4-R-DL-CC-P	3500K LED 80 CRI 1500 LM	0-10V DIMMING 100-10% RANGE	UNV	16W	
AF1	SURFACE WALL	LED VAPORTIGHT LUMINAIRE WITH POLYCARBONATE HOUSING. SUITABLE FOR WET LOCATIONS. WHITE SHEET METAL REFLECTOR AND TEXTURED POLYCARBONATE LENS. 4' LONG.	COLUMBIA LIGHTING LXEM-4-35-ML-RFA-E-U	3500K/80CRI LED 4490 LUMENS	NON-DIM	UNV	39W	
AG1	RECESSED	EDGE-LIT DECORATIVE L.E.D. 1' x 4' RECESSED DOWNLIGHT WITH TWIN ANGLED ACRYLIC DIFFUSING PANELS & DECORATIVE CENTER TRIM BAND.	COLUMBIA LIGHTING VSY14-35-HLHE-G-ED-U	3500K LED 80 CRI 5110 LUMENS	0-10V DIMMING 100-10% RANGE	UNV	38W	
AH1	SURFACE	LED UNDERCABINET LIGHT WITH EXTRUDED ALUMINUM CONSTRUCTION HOUSING AND DIFFUSE MATTE ACRYLIC SHIELDING. 30" LENGTH. WHITE FINISH.	JUNO LIGHTING UPS30-30K-90CRI-WH-NS	3000K LED 90 CRI 844 LM	NON-DIMMING	120V	13W	
BA1	SURFACE EXTERIOR CANOPY	CANOPY DOWNLIGHT WITH DIECAST ALUMINUM HOUSING/SURFACE CONDUIT BACKBOX, NOM. 13" DIA. x 6-1/4" D. UV STABILIZED FROSTED PRISMATIC POLYCARBONATE DOMED DIFFUSER, INTEGRAL ELECTRONIC NON-DIM DRIVER, STANDARD FINISH AS SELECTED BY THE ARCHITECT, OPTIONAL TAMPER RESISTANT HARDWARE & TOOL, U.L. WET LOCATION LISTED.	BROWNLEE 'AXIAL' ROUND 7700-6-(FINISH)-C17-30K-TMP	3000K LED 80 CRI 1417 LUMENS	NON-DIMMING	UNV	16W	
BB1	WALL SURFACE	LOW PROFILE LINEAR WALLWASH LUMINAIRE; ANODIZED ALUMINUM HOUSING WITH DIE CAST ENDCAPS; DOUBLE SEALED POLYCARBONATE LENS; IP66 RATED SUITABLE FOR WET LOCATIONS; STANDARD OUTPUT WITH 45° BEAM SPREAD AND GLARE SHIELD. MOUNTING OPTIONS AND FINISH AS SELECTED BY ARCHITECT.	ORGATECH 1400-4-LS-30-AC277-45-SW-FINISH-G	3000K LED 80 CRI 1,600 LM	INTEGRAL ELECTRONIC LED POWER SUPPLY WITH 0-10V DIMMING	277V	18W	
BC1	WALL SURFACE	DECORATIVE EXTERIOR L.E.D. WALL SCONCE, UL WET LOCATION LISTED, WITH CUTOFF IES TYPE II 'DIFFUSE' DOWNLIGHT DISTRIBUTION PATTERN, NOM. 13"W x 10"H x 4"D 'TRIANGLE/WEDGE' FABRICATED ALUMINUM HOUSING, FACTORY PREMIIUM FINISH AS SELECTED BY THE ARCHITECT, OPTIONAL DIECAST MOUNTING ADAPTER FOR SURFACE CONDUIT CONNECTION WHERE INDICATED ON THE PLANS OR REQUIRED.	ARCHITECTURAL AREA LIGHTING CY1-15-3K8-1-2-UNV-FINISH-F	3000K LED 80 CRI 2500 LUMENS	NON-DIM	UNV	25W	
BC2	WALL SURFACE	SIMILAR TO TYPE BC1 EXCEPT WITH IES TYPE IV OPTICAL DISTRIBUTION.	ARCHITECTURAL AREA LIGHTING CY1-15-3K8-1-4-UNV-FINISH-F	3000K LED 80 CRI 2500 LUMENS	NON-DIM	UNV	25W	
BD2	POLE MOUNTED	DECORATIVE POST-TOP LED WALKWAY LUMINAIRE, WITH 20" DIA. x 2.5"H DIE-CAST ALUMINUM 'DISC HOUSING' WITH MATCHING DIECAST ALUM., 17"H TWIN SUPPORT ARMS, DIFFUSING 'COMFORT' LENS OBSCURES LED ARRAY, I.E.S. SYMMETRIC MEDIUM TYPEIII LIGHT DISTRIBUTION; ROUND STRAIGHT, 4" DIA. x 12'H ALUMINUM POLE, FULL BASE COVER, MATCHING FACTORY-STANDARD FINISH FOR LUMINAIRE AND POLE AS SELECTED BY ARCHITECT.	GARDCO PPT-140L-650-WW/G2-T3-2-UNV-(FINISH) POLE SRS-14-4.0-T4-(FINISH)	3000K LED 2910 LUMENS	NON-DIM	UNV	30W	
BD3	POLE MOUNTED	SIMILAR TO TYPE BD1 EXCEPT WITH IES TYPE III OPTICAL DISTRIBUTION.	GARDCO PPT-140L-650-WW/G2-T3-3-UNV-(FINISH) POLE SRS-14-4.0-T4-(FINISH)	3000K LED 2910 LUMENS	NON-DIM	UNV	30W	
BD5	POLE MOUNTED	SIMILAR TO TYPE BD1 EXCEPT WITH IES TYPE V OPTICAL DISTRIBUTION.	GARDCO PPT-140L-650-WW/G2-T3-5-UNV-(FINISH) POLE SRS-14-4.0-T4-(FINISH)	3000K LED 2910 LUMENS	NON-DIM	UNV	30W	
BK1	PEDESTRIAN POST TOP	DECORATIVE POST-TOP L.E.D. WALKWAY LUMINAIRE, WITH 20" DIA. x 2.5"H DIE-CAST ALUMINUM 'DISC HOUSING' WITH MATCHING DIECAST ALUM., 17"H TWIN SUPPORT ARMS, DIFFUSING 'COMFORT' LENS OBSCURES LED ARRAY, I.E.S. SYMMETRIC MEDIUM TYPE V LIGHT DISTRIBUTION; ROUND STRAIGHT, 4" DIA. x 12'H ALUMINUM POLE, FULL BASE COVER, MATCHING FACTORY-STANDARD FINISH FOR LUMINAIRE AND POLE AS SELECTED BY ARCHITECT.	GARDCO PPT-140L-650-BW/G2-T3-5-UNV-(FINISH) POLE SRS-14-4.0-T4-(FINISH)	LED 3500K 70CRI 2910 LM	NON-DIM	UNV	30	
BK2	PEDESTRIAN POST TOP	SAME AS TYPE BK1, EXCEPT IES TYPE II ASYMMETRIC DISTRIBUTION PATTERN	GARDCO PPT-140L-650-WW/G2-T3-2-UNV-(FINISH) POLE SRS-14-4.0-T4-(FINISH)	LED 3500K 70CRI 2910 LM	NON-DIM	UNV	30	
BK3	PEDESTRIAN POST TOP	SAME AS TYPE BK1 EXCEPT TYPE III ASYMMETRIC DISTRIBUTION PATTERN	GARDCO PPT-140L-650-WW/G2-T3-3-UNV-(FINISH) POLE SRS-14-4.0-T4-(FINISH)	LED 3500K 70CRI 2910 LM	NON-DIM	UNV	30	
EX1	WALL SURFACE	DIECAST ALUMINUM SINGLE FACE LED EXIT SIGN WITH GREEN STENCIL LETTERS, ARROWS AS SHOWN ON THE PLANS. VANDAL RESISTANT LENS; VERIFY FINISH WITH THE ARCHITECT.	ISOLITE TL2-AC-G-1-(FINISH)-MTEB-VR	LED	NON-DIM	UNV	3W	
EX2	WALL SURFACE	NON-ELECTRIC SINGLE FACE EXIT SIGN WITH 20-YR. RATED TRITIUM LIGHT SOURCE, POLYCARBONATE LENS, VANDAL RESISTANT EXTRUDED ALUMINUM FRAME, ARROWS AS INDICATED, BACK-MOUNTED ON WALL, FINISH AS SELECTED BY THE ARCHITECT.	ISOLITE 2040-01-20-1-95-1-G-(FINISH)-MB	TRITIUM	NON-ELECTRIC	NA	NA	
EX3	PENDANT	SAME AS EX2 EXCEPT 24" PENDANT MOUNT	ISOLITE 2040-01-20-1-95-1-G-(FINISH)-MPB	TRITIUM	NON-ELECTRIC	NA	NA	

END OF LUMINAIRE SCHEDULE

ELECTRICAL SYMBOLS LIST

- DC — SECURITY SYSTEM DOOR CONTACT - SEE E-7.4
- M — SECURITY SYSTEM CEILING MOUNT 360° MOTION DETECTOR - SEE E-7.4
- AS — SECURITY SYSTEM AUDIO SENSOR - SEE E-7.4
- K — WALL MOUNTED SECURITY SYSTEM KEYPAD, UP 48" TO TOP OF BOX. SEE E-7.4.
- 1 — PROJECT NUMBERED NOTE, OR SHEET NUMBERED, AS NOTED ON PLAN.
- COPPER GROUND ROD, 10' L x 3/4"Ø, SEE SPECS
- 100A 3P — CIRCUIT BREAKER, INDICATES 100 AMP, 3 POLE
- M — UTILITY METER
- CONDUCTOR LANDING LUGS
- CONDUIT TURN DOWN
- CONDUIT TURN UP
- CONTINUATION
- CONDUIT STUB
- 4004N — ELECTRICAL FEEDER TAG, PER COPPER FEEDER SCHEDULE
- F 1 — MECHANICAL EQUIPMENT DESIGNATION, REFER TO MECHANICAL PLANS.
- PNL LA — ELECTRICAL EQUIPMENT TAG: EQUIPMENT PREFIX "PNL", "DP", "SWBD", "XFMR", "INV", "IDF" EQUIPMENT NAME
- 1/E-0.1 - — DETAIL OR SHEET REFERENCE CALLOUT. INDICATES DETAIL 1, SHEET E-0.1. WHEN ADJACENT EQUIPMENT, APPLIES TO EQUIPMENT IDENTIFIED ONLY.
- 1/E-0.1 TYP — DETAIL OR SHEET REFERENCE CALLOUT. INDICATES DETAIL 1, SHEET E-0.1. WHEN ADJACENT EQUIPMENT, APPLIES TO TYPICAL EQUIPMENT SERIES.

BRANCH CIRCUIT NOMENCLATURE

EXAMPLES:

LA1-3	1-POLE BRANCH CIRCUIT TO CB
LA1-1,3,5	1-POLE BRANCH CIRCUIT FOR MULTI CIRCUIT HOMERUNS TO SEPARATE CB'S.
LA1-[1,3]	2-POLE BRANCH CIRCUIT TO COMMON CB
LA1-[1,3,5]	3-POLE BRANCH CIRCUIT TO COMMON CB

ELECTRICAL SYMBOLS LIST

- MAIN SWITCHBOARD, DISTRIBUTION PANEL, OR MOTOR CONTROL CENTER
- SURFACE MOUNTED PANELBOARD OR EQUIPMENT AS NOTED ON DRAWINGS. 6" - 6" TO TOP
- FLUSH MOUNTED PANELBOARD OR EQUIPMENT AS NOTED ON DRAWINGS. 6" - 6" TO TOP.
- PAD MOUNTED UTILITY TRANSFORMER, PER UTILITY CO. REQUIREMENTS.
- CONDUIT AND WIRE CONCEALED IN CEILING OR WALL
- CONDUIT AND WIRE UNDERGROUND, OR CONCEALED UNDER SLAB
- CONDUIT AND WIRE RUN EXPOSED, PAINTED TO MATCH ALL ADJACENT FINISHES WITHIN FINISHED SPACES
- HOMERUN TO PANELBOARD OR TERMINAL BOARD, AS NOTED ON PLANS
- CROSSMARKS INDICATE QUANTITY OF #12 CONDUCTORS PLUS PARITY SIZED GROUND CONDUCTOR. NO HASHMARKS INDICATES (2) #12 PLUS PARITY SIZED GROUND CONDUCTOR.
  - GROUND WIRE
- (#10) — WIRE SIZE 10 AWG FOR ALL CONDUCTORS, INCLUDING GROUND WIRE THROUGHOUT THE COMPLETE CIRCUIT
- 20A 3PG 125V DUPLEX RECEPTACLE, UP 18" U.O.N. - 'WP' INDICATES WEATHERPROOF.
- 20A 3PG 125V DOUBLE DUPLEX RECEPTACLE, UP 18" U.O.N.
- 20A 3PG 125V DUPLEX RECEPTACLE, MOUNTED ABOVE COUNTER AT +44" MAX.
- 20A 3PG 125V DUPLEX RECEPTACLE, FLUSH CEILING MOUNT.
- SURFACE MOUNTED WIREMOLD RACEWAY WITH RECEPTACLES AS INDICATED ON PLANS
- SURFACE MOUNTED WIREMOLD RACEWAY RISER
- DATA OUTLET, WALL MOUNTED, UP 18" U.O.N.
- DATA OUTLET, WALL MOUNTED, MOUNTED ABOVE COUNTER.
- DATA OUTLET, FLUSH CEILING MOUNT.
  - 'AP' - ACCESS POINT
  - 'P' - PROJECTOR
- FLUSH WALL MOUNTED INDOOR PUBLIC ADDRESS SPEAKER & SIGNAL SYSTEM CLOCK, UP 96" U.O.N.
- FLUSH WALL MOUNTED INDOOR PUBLIC ADDRESS SPEAKER, UP 96" U.O.N. - 'WP' INDICATES WEATHERPROOF
- FLUSH WALL MOUNTED SIGNAL SYSTEM CLOCK, UP +96" U.O.N.
- FLOOR BOX ASSEMBLY, IN-SLAB. DOUBLE DUPLEX RECEPTACLE, AND DATA OUTLET.
- FIRE RATED POKE THRU ASSEMBLY FLOOR BOX
- $_m — LINE VOLTAGE MOTOR RATED SWITCH INSTALLED AT EQUIPMENT SHOWN
- MOTOR DISCONNECT SWITCH, HORSEPOWER RATED, FUSED
  - PLAN SPECIFIC DIMENSIONED SYMBOL, BASED ON INDUSTRY STANDARD FRAME SIZES
  - DIAGRAMAMTIC SYMBOL
- MOTOR DISCONNECT SWITCH, HORSEPOWER RATED, NON FUSED
  - PLAN SPECIFIC DIMENSIONED SYMBOL, BASED ON INDUSTRY STANDARD FRAME SIZES
  - DIAGRAMAMTIC SYMBOL
- VFD — VARIABLE FREQUENCY DRIVE, FURNISHED BY MECHANICAL, INSTALLED AND CONNECTED COMPLETE BY ELECTRICAL.

ELECTRICAL SYMBOLS LIST

- $_a — LINE VOLTAGE SINGLE POLE TOGGLE SWITCH, LETTER ADJACENT INDICATES RESPECTIVE ZONE CONTROLLED, UP 48" U.O.N.
- $_2 — LINE VOLTAGE TWO POLE TOGGLE SWITCH, UP 48" U.O.N.
- $_3 — LINE VOLTAGE THREE-WAY TOGGLE SWITCH, UP 48" U.O.N.
- $_k — LINE VOLTAGE KEY OPERATED TOGGLE SWITCH
- $_m — LINE VOLTAGE MOTOR RATED TOGGLE SWITCH INSTALLED AT EQPT SHOWN
- $_p — LINE VOLTAGE TOGGLE SWITCH WITH PILOT LIGHT, LIGHT IS ON WHEN CIRCUIT IS CLOSED, UP 48" U.O.N.
- S ab — LOW VOLTAGE MOMENTARY CONTACT SWITCH - SEE LOW VOLTAGE RELAY SCHEDULE, LOWER CASE LETTER ADJACENT INDICATES RESPECTIVE ZONE CONTROLLED, UP 48" U.O.N.
- kS ab — LOW VOLTAGE KEYED MOMENTARY CONTACT SWITCH - SEE LOW VOLTAGE RELAY SCHEDULE, LOWER CASE LETTER ADJACENT INDICATES RESPECTIVE ZONE CONTROLLED, UP 48" U.O.N.
- aOS b — WALL MOUNTED SWITCH TYPE INFRARED OCCUPANCY SENSOR; UP 48" U.O.N.; SINGLE OR DUAL AS NOTED BY LETTERS ADJACENT. SET TO FIXED 20 MINUTE TIME DELAY AND MAX SENSITIVITY
- aDS b — WALL MOUNTED DUAL TECHNOLOGY OCCUPANCY SENSOR; UP 48" U.O.N.; SINGLE OR DUAL AS NOTED BY LETTERS ADJACENT. SET TO FIXED 20 MINUTE TIME DELAY AND MAX SENSITIVITY
- OSD — WALL MOUNTED DIGITAL DUAL TECHNOLOGY DIMMING OCCUPANCY SENSOR SWITCH; UP 48" U.O.N.
- S a — WALL MOUNTED DIGITAL SWITCH, UP 48" U.O.N.; LOWER CASE LETTER ADJACENT INDICATES RESPECTIVE ZONE CONTROLLED
- 2 D a,b — WALL MOUNTED SINGLE OR MULTI-ZONE DIGITAL DIMMER SWITCH, UP 48" U.O.N.; LOWER CASE LETTERS ADJACENT INDICATE RESPECTIVE ZONES TO BE SIMULTANEOUSLY MANUALLY CONTROLLED; NUMERAL DESIGNATES NUMBER OF ZONES ASSIGNED TO THE DEVICE
- CEILING MOUNTED DUAL TECHNOLOGY DIGITAL OCCUPANCY SENSOR
- WALL MOUNTED DUAL TECHNOLOGY DIGITAL OCCUPANCY SENSOR
- LOW VOLTAGE COLD TEMPERATURE PIR OCCUPANCY SENSOR
- CEILING MOUNTED LINE VOLTAGE DUAL TECHNOLOGY OCCUPANCY SENSOR
- Z3,Z4 (P) — SINGLE OR MULTI-ZONE SWITCHING OR DIMMING OPEN LOOP DIGITAL DAYLIGHTING SENSOR; NOTATIONS ADJACENT IDENTIFY DAYLIGHT ZONES ASSIGNED TO THE DEVICE. VERIFY EXACT LOCATION PRIOR TO ROUGH-IN
- Z1 (P) — SINGLE ZONE SWITCHING OR DIMMING CLOSED LOOP DIGITAL DAYLIGHTING SENSOR; NOTATIONS ADJACENT IDENTIFY DAYLIGHT ZONES ASSIGNED TO THE DEVICE. VERIFY EXACT LOCATION PRIOR TO ROUGH-IN
- Z1 (P) — DAYLIGHT CONTROL PHOTOCELL - BRACKET MOUNTED; NOTATIONS ADJACENT IDENTIFY DAYLIGHT ZONES ASSIGNED TO THE DEVICE. VERIFY EXACT LOCATION PRIOR TO ROUGH-IN
- Z2 — INDICATES DAYLIGHT ZONE CONTROLLED VIA PHOTOCELL
- RC 2 — ROOM CONTROLLER
  - ADJACENT NUMERAL REFERS TO THE NUMBER OF ZONES TO BE CONTROLLED. VENDOR OR CONTRACTOR TO PROVIDE QUANTITY OF ROOM CONTROLLERS REQUIRED FOR THE NUMBER OF CONTROLLED ZONES.
- PC — PLUG LOAD ROOM CONTROLLER
- NB — NETWORK BRIDGE
- MBR — MASTER WIRELESS BORDER ROUTER & NB - SWITCH IN NETWORK CABINET
- BR 1 — SECONDARY WIRELESS BORDER ROUTER
- IR — ISOLATED RELAY INTERFACE
- EC — EMERGENCY LIGHTING CONTROL MODULE
- P — OCCUPANCY SENSOR POWER PACK MOUNTED IN CONCEALED ACCESSIBLE LOCATION

CALIFORNIA GREEN BUILDING STANDARDS COMPLIANCE

ALL EXTERIOR LUMINAIRES SPECIFIED IN THESE CONTRACT DOCUMENTS COMPLY WITH THE REQUIREMENTS OF THE CALIFORNIA ENERGY CODE AND THE CALIFORNIA GREEN BUILDING STANDARDS CODE, SECTION A5.106.8 LIGHT POLLUTION REDUCTION. EXTERIOR LUMINAIRES COMPLY WITH BACKLIGHT, UPLIGHT, AND GLARE (BUG) RATINGS AS DEFINED IN IESNA TM-15-11 AND BUG RATINGS DO NOT EXCEED THE MAXIMUM ALLOWABLE RATINGS FOR THIS PROJECT.

ELECTRICAL SYMBOLS LIST

ALL SWITCH AND CONTROL MOUNTING HEIGHTS OF 48" SHALL BE TO TOP OF THE DEVICE BOX. ALL RECEPTACLES WITH MOUNTING HEIGHT OF UP TO 18" SHALL BE NO LOWER THAN 15" TO BOTTOM OF THE DEVICE BOX, TYPICAL, U.O.N.

- LA2-1 — AREA BRANCH CIRCUIT TAG. INDICATES BRANCH CIRCUIT FOR ALL LIGHTING SHOWN IN AREA (OR ADJACENT CONNECTED AREA); U.O.N.
- AA1 — INDICATES LUMINAIRE TYPE, SEE LUMINAIRE SCHEDULE
- RECESSED 2'x2', 2'x4' OR 1'x4' LUMINAIRE, FULLY LENSED
- EM EM — INDICATES EMERGENCY LUMINAIRE. SEE ABBREVIATIONS FOR TYPE OF EMERGENCY SOURCE
- SUSPENDED LINEAR LUMINAIRE
- INDICATES AIRCRAFT CABLE SUPPORT POINT (VERIFY WITH MFGR)
- INDICATES COMBINATION AIRCRAFT CABLE/ELECTRICAL FEED POINT (VERIFY WITH MFGR)
- SURFACE CEILING, WALL OR COVE MOUNTED LUMINAIRE
- UNDER CABINET LUMINAIRE
- SURFACE CEILING MOUNTED LUMINAIRE
- PENDANT MOUNTED LUMINAIRE
- WALL MOUNTED LUMINAIRE
- RECESSED DOWNLIGHT LUMINAIRE
- RECESSED WALLWASH LUMINAIRE
- POLE ARM-MOUNTED AREA LUMINAIRE; ARROW INDICATES DIRECTION OF LIGHT DISTRIBUTION WHEN NOT PARALLEL TO ARM ORIENTATION
- POST-TOP PEDESTRIAN-SCALE AREA LUMINAIRE; ARROW INDICATES DIRECTION OF LIGHT DISTRIBUTION
- WALL MOUNTED EXIT SIGN, ARROWS AS NOTED ON PLANS. SHADED AREA INDICATES NUMBER OF FACES

IDENTIFICATION STAMP
DIV. OF THE STATE ARCHITECT
APP: 01-119994 INC:
REVIEWED FOR
SS ☑ FLS ☑ ACS ☑
DATE: 08/16/2022

QUATTROCCHI KWOK ARCHITECTS
Main:
636 Fifth Street, Santa Rosa, CA 95404
East Bay:
55 Harrison Street, Suite 525, Oakland, CA 94607
(707) 576-0829

O'MAHONY & MYER
ELECTRICAL ENGINEERS & LIGHTING DESIGN
4340 REDWOOD HWY., SUITE 245
SAN RAFAEL, CALIFORNIA 94903
(415) 492-0420/FAX (415) 479-0662

REGISTERED PROFESSIONAL ENGINEER
JOHN J. COLENBRANDER
No. 16738
Exp. 6/23
ELECTRICAL
STATE OF CALIFORNIA

LIBERTY HIGH SCHOOL

NEW CLASSROOM BUILDING

850 2ND STREET
BRENTWOOD, CA
94513

LIBERTY UNION HIGH SCHOOL DISTRICT

DSA APP NO. 01-119994
ARCH PROJECT NO: 1719.00
DRAWN BY: JK
DRAWING SCALE: AS NOTED
PTN: 61721-83 FILE NO: 7-H4
CONSTRUCTION DOCUMENTS
JUNE 24, 2022

SHEET TITLE
ELECTRICAL SYMBOLS LIST & LUMINAIRE SCHEDULE

SHEET NUMBER
E-0.2

LIBERTY HS NEW CLASSROOM BUILDINGS - 221060 R20

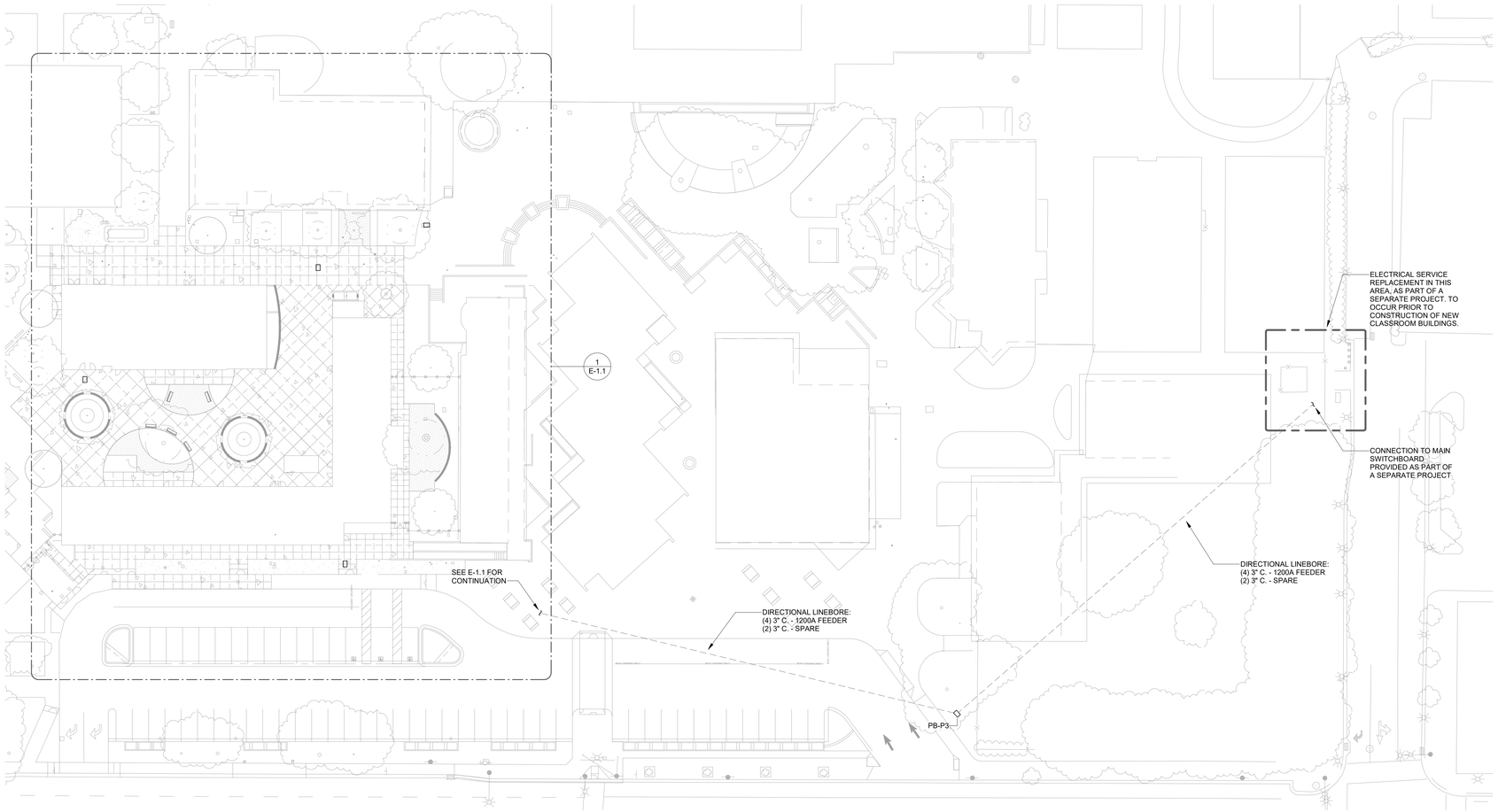

1 SITE PLAN - ELECTRICAL OVERALL
1" = 30'-0"

TRUE NORTH

IDENTIFICATION STAMP
DIV. OF THE STATE ARCHITECT
APP: 01-119994 INC:
REVIEWED FOR
SS ☑ FLS ☑ ACS ☑
DATE: 08/16/2022

QUATTROCCHI KWOK ARCHITECTS
Main:
636 Fifth Street, Santa Rosa, CA 95404
East Bay:
55 Harrison Street, Suite 525,
Oakland, CA 94607
(707) 576-0829

O'MAHONY & MYER
ELECTRICAL ENGINEERING & LIGHTING DESIGN
4340 REDWOOD HWY., SUITE 245
SAN RAFAEL, CALIFORNIA 94903
(415) 492-0420 FAX (415) 479-9662

REGISTERED PROFESSIONAL ENGINEER
JOHN J. COLENBRANDER
No. 14738
Exp. 6/23
ELECTRICAL
STATE OF CALIFORNIA

LIBERTY HIGH SCHOOL

NEW CLASSROOM BUILDING

850 2ND STREET
BRENTWOOD, CA
94513

LIBERTY UNION HIGH SCHOOL DISTRICT

DSA APP NO. 01-119994
ARCH PROJECT NO: 1719.00
DRAWN BY: Author
DRAWING SCALE: AS NOTED
PTN: 61721-83 FILE NO: 7-H4
CONSTRUCTION DOCUMENTS
JUNE 24, 2022

SHEET TITLE
SITE PLAN OVERALL ELECTRICAL

SHEET NUMBER
E-1.0

LIBERTY HS NEW CLASSROOM BUILDINGS - 221060 R20

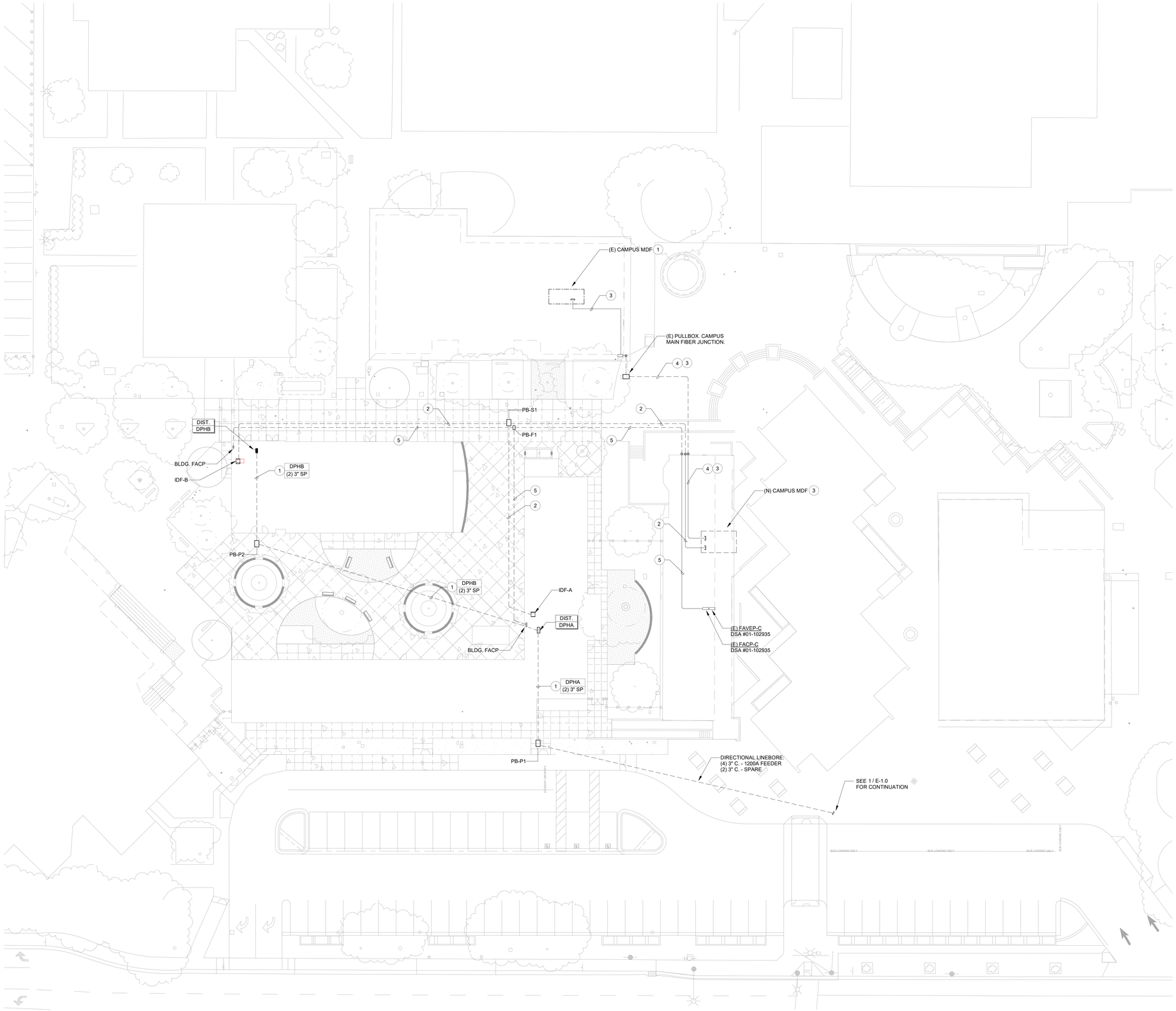

1 SITE PLAN - ELECTRICAL
1" = 20'-0"

SHEET NUMBERED NOTES

1. PROVIDE AND INSTALL UNDERGROUND FEEDERS TO DISTRIBUTION AND BRANCH PANELS AS NOTED WITH ADJACENT TAG DESCRIPTION. SEE E-5.1 FOR FEEDER SIZING & 1/E-7.1 FOR TRENCHING DETAIL. CONDUIT TAG NOTED WITH "SP" SHALL BE SPARE C.O. FOR FUTURE USE.
2. PROVIDE AND INSTALL UNDERGROUND (OR CONCEALED WITHIN BUILDING) SIGNAL SYSTEMS AS FOLLOWS - SEE 1/E-7.1 FOR TRENCHING DETAIL:
   (3) 3" C. - FIBER OPTIC (VOICE AND DATA) - SEE 2/E-5.4
   (1) 2" C. - COPPER TELE BACKBONE - SEE 2/E-5.4
   (1) 2" C. - EMS - STUB CONDUITS AT BACKBOARD
   (1) 2" C. - SECURITY - STUB CONDUITS AT BACKBOARD
   (2) 2" C. - SPARES - STUB CONDUITS AT BACKBOARD
3. THE EXISTING CAMPUS MDF IS TO BE RELOCATED TO THE ADMIN BUILDING. ALL EXISTING FIBER OPTIC CABLING TERMINATING AT THIS MDF, SHALL BE PULLED BACK VIA THE EXISTING CONDUIT ROUTE TO THE PULLBOX IDENTIFIED OUTSIDE THIS BUILDING. THE FIBER(S) SHALL THEN BE RE-ROUTED VIA A NEW CONDUIT SYSTEM ROUTED UNDERGROUND, THEN CONCEALED THROUGH THE EXISTING BUILDING, AND TERMINATED COMPLETE TO NEW MDF EQUIPMENT. EXISTING FIBER COUNT: (20) 6-STRAND SM FIBER OPTIC.
4. PROVIDE AND INSTALL (4) 3" C. FOR RE-ROUTE FIBER CABLING AND (2) 3" CONDUITS FOR NEW OR FUTURE CABLING.
5. PROVIDE AND INSTALL UNDERGROUND (OR CONCEALED WITHIN BUILDING) CONDUITS FOR FIRE ALARM: (2) 2" C.

PULLBOX SCHEDULE

PULLBOX ID	SIZE	LABEL
PB-F1	N16	"FIRE ALARM"
PB-F1	N16	"FIRE ALARM"
PB-P1	N40	"POWER"
PB-P2	N40	"POWER"
PB-P3	N40	"POWER"
PB-S1	N40	"SIGNAL"

PULLBOXES SHALL BE, IN GRADE CHRISTY (OR EQUAL), SIZED AS NOTED ON SCHEDULE. PULLBOX COVER SHALL BE LABELED AS IDENTIFIED ON SCHEDULE. WHERE LOCATED IN TRAFFIC AREAS, BOXES SHALL BE 'TRAFFIC RATED' REINFORCED CONCRETE WITH STEEL FRAME AND STEEL COVER. WHERE LOCATED ELSEWHERE, BOXES SHALL BE REINFORCED CONCRETE AND COMPOSITE COVER. ALL PULLBOX LOCATIONS SHALL BE COORDINATED WITH THE ARCHITECT.

TRUE NORTH

IDENTIFICATION STAMP
DIV. OF THE STATE ARCHITECT
APP: 01-119994 INC:
REVIEWED FOR
SS ☑ FLS ☑ ACS ☑
DATE: 08/16/2022

QUATTROCCHI KWOK ARCHITECTS
Main:
636 Fifth Street, Santa Rosa, CA 95404
East Bay:
55 Harrison Street, Suite 525,
Oakland, CA 94607
(707) 576-0829

O'MAHONY & MYER
ELECTRICAL ENGINEERING & LIGHTING DESIGN
4340 REDWOOD HWY., SUITE 245
SAN RAFAEL, CALIFORNIA 94903
(415) 492-0420 FAX (415) 479-9662

REGISTERED PROFESSIONAL ENGINEER
JOHN J. COLENBRANDER
No. 16738
Exp. 6/23
ELECTRICAL
STATE OF CALIFORNIA

LIBERTY HIGH SCHOOL

NEW CLASSROOM BUILDING

850 2ND STREET
BRENTWOOD, CA
94513

LIBERTY UNION HIGH SCHOOL DISTRICT

DSA APP NO. 01-119994
ARCH PROJECT NO: 1719.00
DRAWN BY: JK
DRAWING SCALE: AS NOTED
PTN: 61721-83 FILE NO: 7-H4
CONSTRUCTION DOCUMENTS
JUNE 24, 2022

SHEET TITLE
SITE PLAN ELECTRICAL

SHEET NUMBER
E-1.1

LIBERTY HS NEW CLASSROOM BUILDINGS - 221060 R20

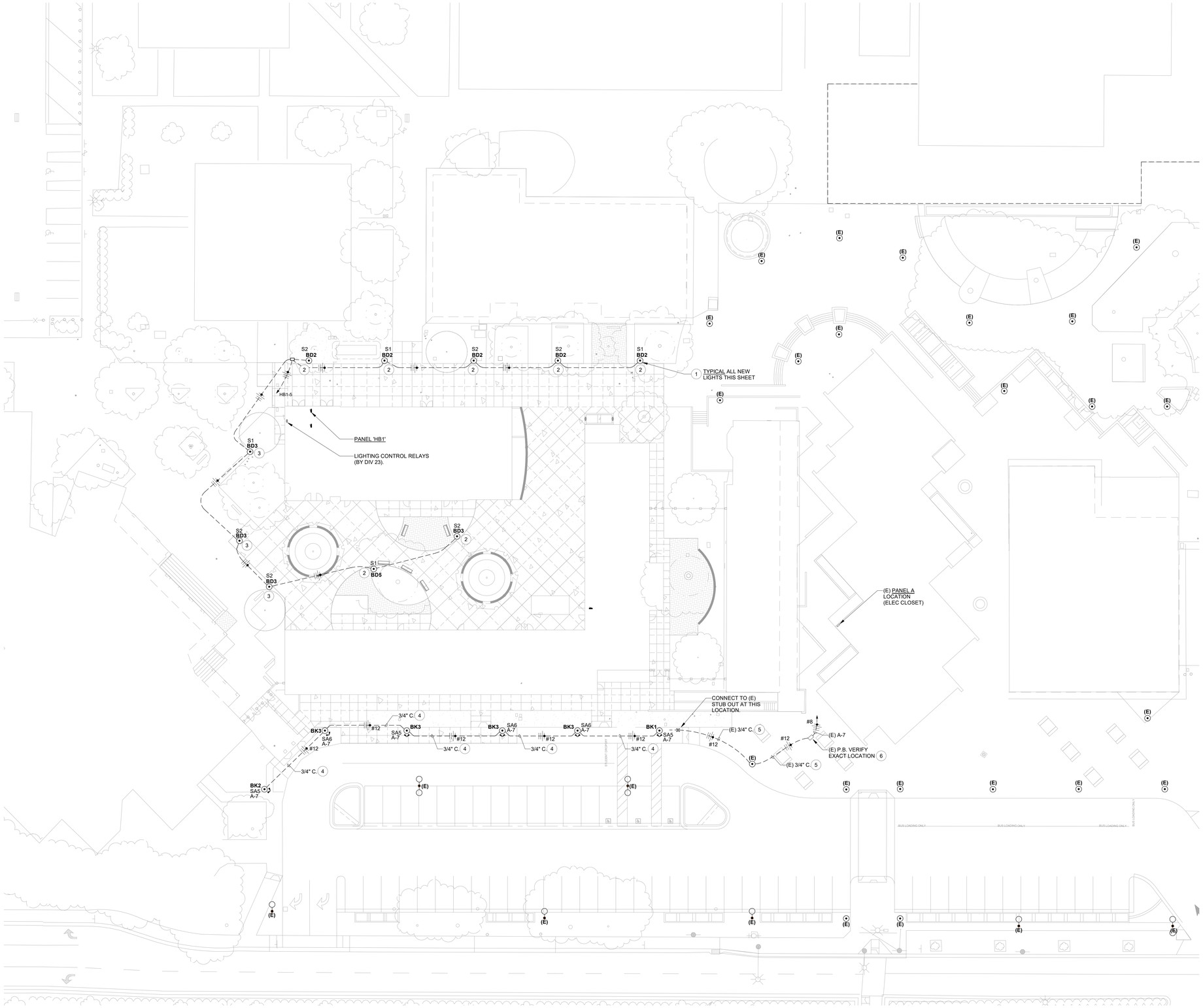

1 SITE PLAN - LIGHTING
1" = 20'-0"

SHEET NUMBERED NOTES

1. ROUTE HOME TO PANEL VIA RELAYS IN ELECTRIC ROOM. DIVISION 23 TO SUPPLY AND INSTALL THESE RELAYS FOR CONTROL OF EXTERIOR LIGHTING. SEE DIAGRAM 3/E-5.3.
2. SEE DETAIL 11/E-7.2
3. SEE DETAIL 12/E-7.2
4. INSTALL WIRING IN NEW CONDUIT.
5. INSTALL WIRING IN EXISTING CONDUIT.
6. CONNECT COMPLETE TO EXISTING BRANCH CIRCUIT IN EXISTING PULLBOX. UTILIZE WEATHERPROOF SPLICE.

IDENTIFICATION STAMP
DIV. OF THE STATE ARCHITECT
APP: 01-119994 INC:
REVIEWED FOR
SS ☑ FLS ☑ ACS ☑
DATE: 08/16/2022

QUATTROCCHI KWOK ARCHITECTS
Main:
636 Fifth Street, Santa Rosa, CA 95404
East Bay:
55 Harrison Street, Suite 525,
Oakland, CA 94607
(707) 576-0829

O'MAHONY & MYER
ELECTRICAL ENGINEERING & LIGHTING DESIGN
4340 REDWOOD HWY., SUITE 245
SAN RAFAEL, CALIFORNIA 94903
(415) 492-0420 FAX (415) 479-9662
REGISTERED PROFESSIONAL ENGINEER
JOHN J. COLENBRANDER
No. 14738
Exp. 6/23
ELECTRICAL
STATE OF CALIFORNIA

LIBERTY HIGH SCHOOL

NEW CLASSROOM BUILDING

850 2ND STREET
BRENTWOOD, CA
94513

LIBERTY UNION HIGH SCHOOL DISTRICT

DSA APP NO. 01-119994

ARCH PROJECT NO:	1719.00
DRAWN BY:	Author
DRAWING SCALE:	AS NOTED
PTN: 61721-83	FILE NO: 7-H4

CONSTRUCTION DOCUMENTS

JUNE 24, 2022

SHEET TITLE

SITE PLAN LIGHTING

SHEET NUMBER

E-1.2

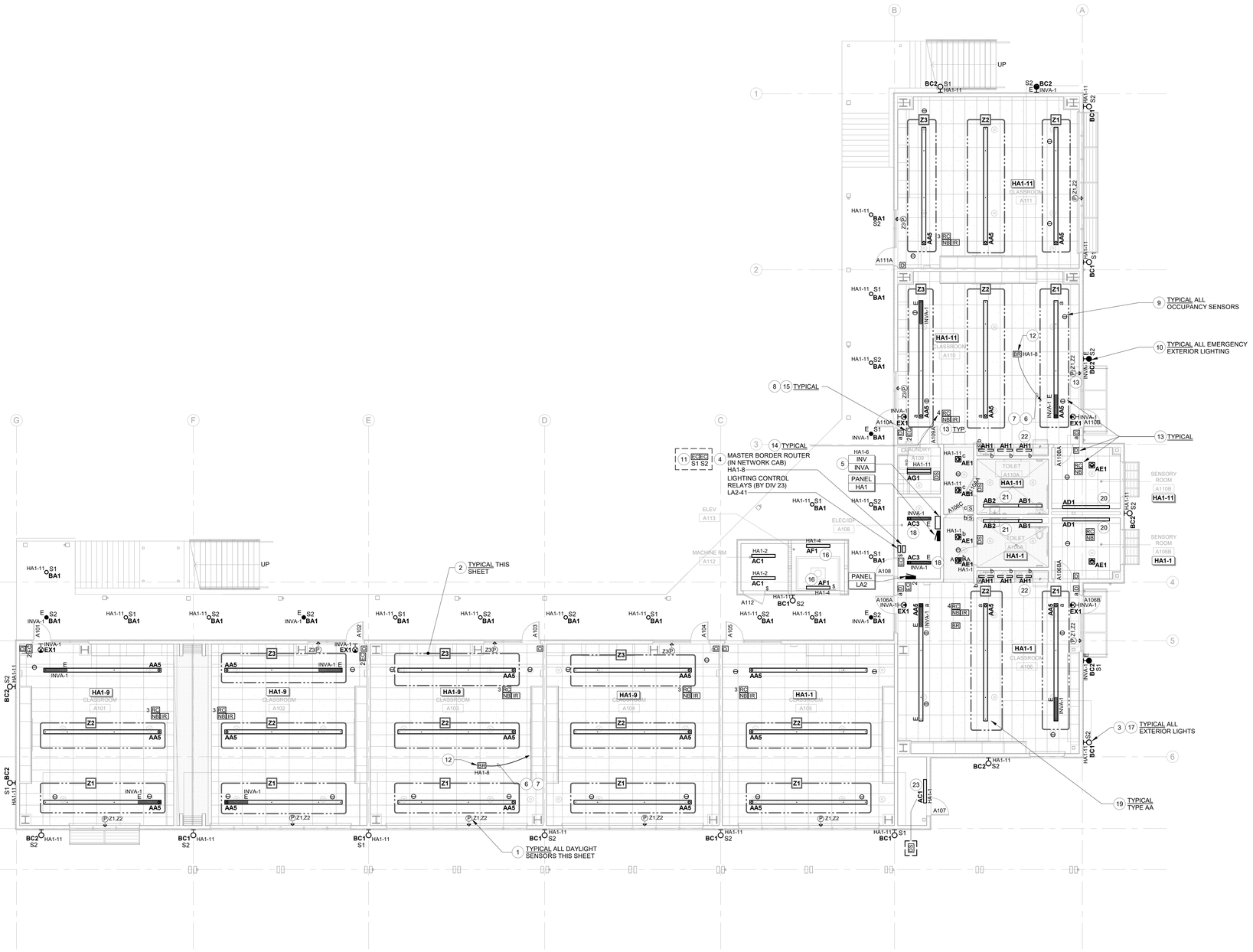

1 FIRST FLOOR PLAN - BLDG A - LIGHTING
1/8" = 1'-0"

SHEET NUMBERED NOTES

1. WATTSTOPPER LMLS-500 DAYLIGHT SENSOR AND LMLS-MB2 MOUNTING BRACKET. MOUNT SENSOR TO EDGE OF SUSPENDED ACOUSTIC CEILING. SEE MOUNTING DETAIL 5/E-7.3. TYPICAL FOR ALL DAYLIGHT SENSORS THIS SHEET. COORDINATE WITH ALL OTHER TRADES TO ASSURE SENSOR HAS UNOBSTRUCTED 'VIEW' OUT WINDOW.
2. WHEN ADJUSTING DIMMING PARAMETERS FOR DAYLIGHT CONTROLS, MEASURE ROOM WORKPLANE ILLUMINATION AT THE POINT IN THE DAYLIT ZONE (AS SHOWN ON PLANS) THAT IS FURTHEST FROM THE WINDOW.
3. ROUTE CIRCUIT HOME TO PANEL VIA EXTERIOR LIGHTING CONTROL RELAYS IN ELECTRIC ROOM. SEE DIAGRAM 2/E-5.3. RELAYS SUPPLIED AND INSTALLED BY DIVISION 23. TYPICAL FOR ALL EXTERIOR LIGHTING.
4. MASTER BORDER ROUTER FOR PROVIDING DEMAND RESPONSE CAPABILITY. SEE 1/E-5.2.
5. SEE INVERTER SPECIFICATIONS ON E-5.3.
6. CAT6A UTP CABLE FOR IP CONNECTION TO MASTER BORDER ROUTER, SEE 1/E-5.2.
7. TO MASTER BORDER ROUTER IN ELECTRIC ROOM.
8. NUMERAL ADJACENT EMERGENCY LIGHTING CONTROL MODULE SYMBOL INDICATES NUMBER OF MODULES REQUIRED AT THAT LOCATION.
9. MOUNT OCCUPANCY SENSOR AT LEAST 6'-0" FROM SUPPLY AIR AND COOLING AIR VENTS. TYPICAL ALL SENSORS U.O.N.
10. ROUTE HOME VIA EMERGENCY CONTROL MODULE IN ELECTRIC ROOM CONTROLLED BY RELAYS SUPPLIED AND INSTALLED BY DIVISION 23 FOR CONTROL OF EXTERIOR LIGHTING. SEE DETAILS 2/E-5.2 AND 1/E-5.3. TYPICAL ALL EMERGENCY EXTERIOR LIGHTING.
11. LABEL EMERGENCY CONTROL MODULES FOR ZONES S1 AND S2 "EXTERIOR LTS".
12. INSTALL NO WIRELESS DEVICES WITHIN 10'-0" RADIUS OF THE BORDER ROUTER. INCLUDING WATTSTOPPER WIRELESS NETWORK BRIDGES AND THIRD-PARTY DEVICES SUCH AS WI-FI ACCESS POINTS, SECURITY SYSTEMS, RFID TAGGING EQUIPMENT, ETC. COORDINATE THIS REQUIREMENT WITH GENERAL CONTRACTOR AND ALL TRADES.
13. PROVIDE AND INSTALL DIMMER SWITCH(ES), OCCUPANCY SENSOR(S), ISOLATED RELAY(S), PLUG CONTROLLER(S), PHOTOSENSOR(S), ROOM CONTROLLERS AND NETWORK BRIDGES WHERE SHOWN. SEE DETAILS ON SHEET E-5.2 & E-5.3. MOUNT ROOM CONTROLLER ABOVE ACCESSIBLE CEILING WHEREVER POSSIBLE.
14. NUMERAL ADJACENT TO ROOM CONTROLLER INDICATES NUMBER OF CONTROL ZONES REQUIRED. VENDOR OR CONTRACTOR TO PROVIDE QUANTITY OF ROOM CONTROLLERS REQUIRED FOR THE NUMBER OF CONTROLLED ZONES.
15. PROVIDE AN EMERGENCY LIGHTING CONTROL MODULE FOR ALL SWITCHED LIGHT FIXTURES ON EMERGENCY INVERTER. THIS INCLUDES EMERGENCY FIXTURES CONTROLLED BY OCCUPANCY SENSORS. SEE 2/E-5.2 & 1/E-5.3. MOUNT CONTROL MODULE/TEST SWITCH 7'-6" A.F.F AND ALIGN WITH LIGHT SWITCH BELOW WHEREVER POSSIBLE, OR ELSE LABEL MODULE WITH CORRESPONDING ROOM NAME.
16. ELEVATOR PIT LIGHTS. COORDINATE LOCATION WITH THE ELEVATOR CONTRACTOR.
17. WALL MOUNTED AT 9'-0" A.F.F. TO THE BOTTOM OF THE LUMINAIRE U.O.N.
18. PENDANT MOUNTED AT 10'-0" A.F.F. TO THE BOTTOM OF THE LUMINAIRE.
19. PENDANT MOUNTED AT 8'-0" A.F.F. TO THE BOTTOM OF THE LUMINAIRE.
20. WALL MOUNTED AT 8'-0" A.F.F. TO THE BOTTOM OF THE LUMINAIRE.
21. WALL MOUNTED AT 8'-6" A.F.F. TO THE CENTERLINE OF THE LUMINAIRE.
22. UNDERCABINET LIGHTS. SEE DETAIL 13/E7.2.
23. WALL MOUNTED ABOVE DOOR HEADER.

IDENTIFICATION STAMP
DIV. OF THE STATE ARCHITECT
APP: 01-119994 INC:
REVIEWED FOR
SS ☑ FLS ☑ ACS ☑
DATE: 08/16/2022

QUATTROCCHI KWOK ARCHITECTS
Main:
636 Fifth Street, Santa Rosa, CA 95404
East Bay:
55 Harrison Street, Suite 525,
Oakland, CA 94607
(707) 576-0829

O'MAHONY & MYER
ELECTRICAL ENGINEERING & LIGHTING DESIGN
4340 REDWOOD HWY., SUITE 245
SAN RAFAEL, CALIFORNIA 94903
(415) 492-0420 FAX (415) 479-9662
RICHARD J. COLEMAN III
NO. 14738
Exp. 6/23
REGISTERED PROFESSIONAL ENGINEER
ELECTRICAL
STATE OF CALIFORNIA

LIBERTY HIGH SCHOOL

NEW CLASSROOM BUILDING

850 2ND STREET
BRENTWOOD, CA
94513

LIBERTY UNION HIGH SCHOOL DISTRICT

DSA APP NO.	01-119994
ARCH PROJECT NO:	1719.00
DRAWN BY:	JK
DRAWING SCALE:	AS NOTED
PTN: 61721-83	FILE NO: 7-H4

CONSTRUCTION DOCUMENTS

JUNE 24, 2022

SHEET TITLE

FIRST FLOOR PLAN BLDG. A LIGHTING

SHEET NUMBER

E-A2.1

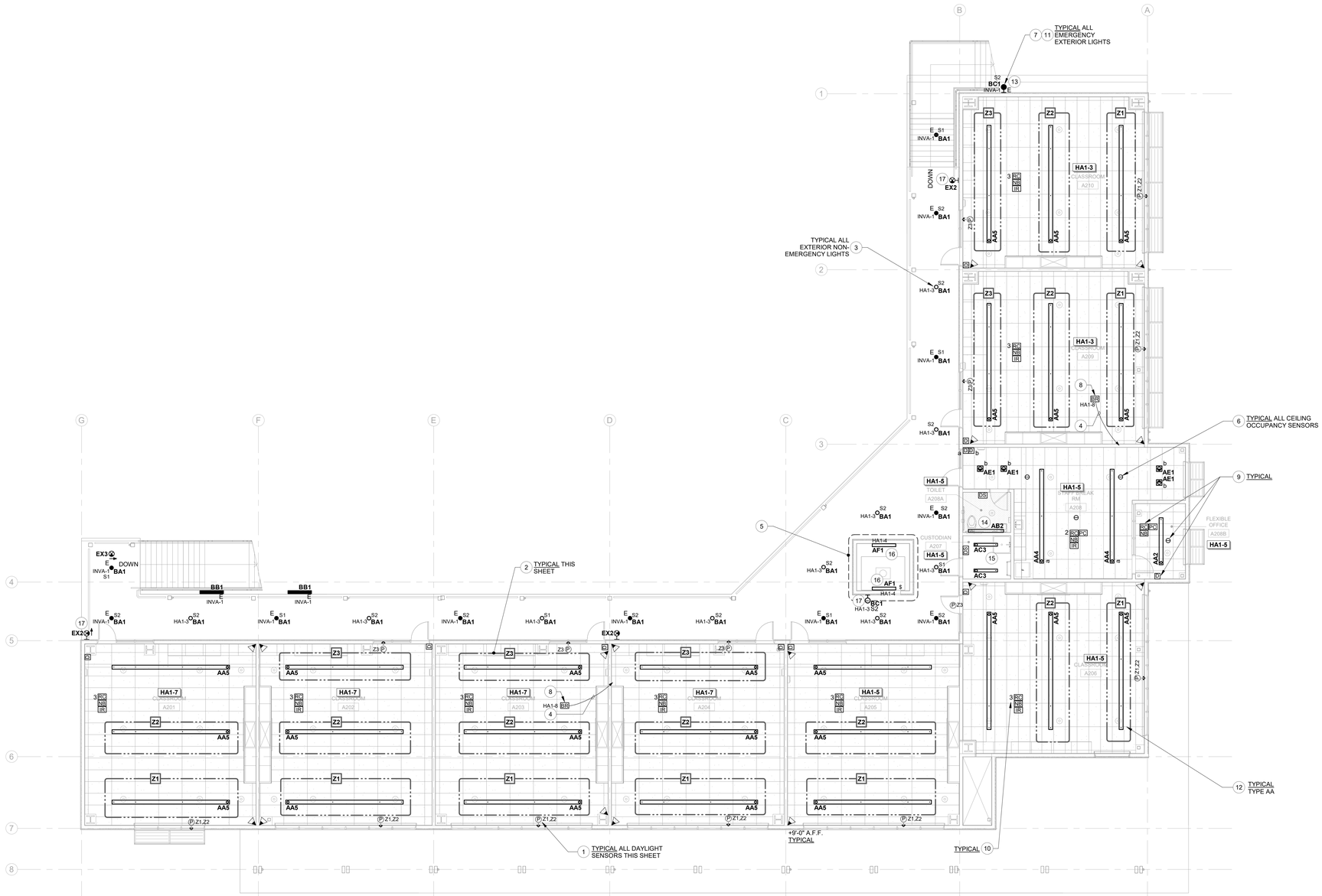

1 SECOND FLOOR PLAN - BLDG A - LIGHTING
1/8" = 1'-0"

SHEET NUMBERED NOTES

1. WATTSTOPPER LMLS-500 DAYLIGHT SENSOR AND LMLS-MB2 MOUNTING BRACKET. MOUNT SENSOR TO EDGE OF SUSPENDED ACOUSTIC CEILING. SEE MOUNTING DETAIL 5/E-7.3. TYPICAL FOR ALL DAYLIGHT SENSORS THIS SHEET. COORDINATE WITH ALL OTHER TRADES TO ASSURE SENSOR HAS UNOBSTRUCTED 'VIEW' OUT WINDOW.
2. WHEN ADJUSTING DIMMING PAREMETERS FOR DAYLIGHT CONTROLS, MEASURE ROOM WORKPLANE ILLUMINATION AT THE POINT IN THE DAYLITE ZONE (AS SHOWN ON PLANS) THAT IS FURTHEST FROM THE WINDOW.
3. ROUTE CIRCUIT HOME TO PANEL VIA EXTERIOR LIGHTING CONTROL RELAYS IN ELECTRIC ROOM. SEE DIAGRAM 2/E-5.3. RELAYS SUPPLIED AND INSTALLED BY DIVISION 23. TYPICAL FOR ALL EXTERIOR LIGHTING.
4. CAT6A UTP CABLE FOR IP CONNECTION TO MASTER BORDER ROUTER IN ELECTRIC ROOM. SEE 1/E-5.2.
5. COORDINATE LOCATION OF LIGHTS AND SWITCH WITH ELEVATOR CONTRACTOR.
6. MOUNT OCCUPANCY SENSOR AT LEAST 6'-0" FROM SUPPLY AIR AND COOLING AIR VENTS. TYPICAL ALL SENSORS U.O.N.
7. ROUTE HOME VIA EMERGENCY CONTROL MODULE IN ELECTRIC ROOM CONTROLLED BY RELAYS SUPPLIED AND INSTALLED BY DIVISION 23 FOR CONTROL OF EXTERIOR LIGHTING. SEE DETAILS 2/E-5.2 AND 1/E-5.3. TYPICAL ALL EMERGENCY EXTERIOR LIGHTING.
8. INSTALL NO WIRELESS DEVICES WITHIN 10'-0" RADIUS OF THE BORDER ROUTER, INCLUDING WATTSTOPPER WIRELESS NETWORK BRIDGES AND THIRD-PARTY DEVICES SUCH AS WI-FI ACCESS POINTS, SECURITY SYSTEMS, RFID TAGGING EQUIPMENT, ETC. COORDINATE THIS REQUIREMENT WITH GENERAL CONTRACTOR AND ALL TRADES.
9. PROVIDE AND INSTALL DIMMER SWITCH(ES), OCCUPANCY SENSOR(S), ISOLATED RELAY(S), PLUG CONTROLLER(S), PHOTOSENSOR(S), ROOM CONTROLLERS AND NETWORK BRIDGES WHERE SHOWN. SEE DETAILS ON SHEET E-5.2 & E-5.3. MOUNT ROOM CONTROLLER ABOVE ACCESSIBLE CEILING WHEREVER POSSIBLE.
10. NUMERAL ADJACENT TO ROOM CONTROLLER INDICATES NUMBER OF CONTROL ZONES REQUIRED. VENDOR OR CONTRACTOR TO PROVIDE QUANTITY OF ROOM CONTROLLERS REQUIRED FOR THE NUMBER OF CONTROLLED ZONES.
11. PROVIDE AN EMERGENCY LIGHTING CONTROL MODULE FOR ALL EXTERIOR LIGHT FIXTURES ON EMERGENCY INVERTER. SEE 2/E-5.2 MOUNT CONTROL MODULE/TEST SWITCH IN ELECTRIC ROOM. SEE E-A2.1 FOR LOCATION.
12. PENDANT MOUNTED AT 8'-0" A.F.F. TO THE BOTTOM OF THE LUMINAIRE.
13. WALL MOUNTED AT 9'-0" ABOVE STAIR TREAD TO THE BOTTOM OF THE LUMINAIRE.
14. WALL MOUNTED AT 8'-6" TO THE CENTERLINE OF THE LUMINAIRE.
15. PENDANT MOUNTED AT 10'-0" A.F.F. TO THE BOTTOM OF THE LUMINAIRE.
16. ELEVATOR SHAFT LIGHT. COORDINATE LOCATION WITH ELEVATOR CONTRACTOR.
17. WALL MOUNTED AT 9'-0" A.F.F. TO BOTTOM OF THE LUMINAIRE.

IDENTIFICATION STAMP
DIV. OF THE STATE ARCHITECT
APP: 01-119994 INC:
REVIEWED FOR
SS ☑ FLS ☑ ACS ☑
DATE: 08/16/2022

QUATTROCCHI KWOK ARCHITECTS
Main:
636 Fifth Street, Santa Rosa, CA 95404
East Bay:
55 Harrison Street, Suite 525,
Oakland, CA 94607
(707) 576-0829

O'MAHONY & MYER
ELECTRICAL ENGINEERING & LIGHTING DESIGN
4340 REDWOOD HWY., SUITE 245
SAN RAFAEL, CALIFORNIA 94903
(415) 492-0400 FAX (415) 479-9662

REGISTERED PROFESSIONAL ENGINEER
JOHN J. COLENBRANDER
No. 14738
Exp. 6/23
ELECTRICAL
STATE OF CALIFORNIA

LIBERTY HIGH SCHOOL

NEW CLASSROOM BUILDING

850 2ND STREET
BRENTWOOD, CA
94513

LIBERTY UNION
HIGH SCHOOL
DISTRICT

DSA APP NO. 01-119994

ARCH PROJECT NO:	1719.00
DRAWN BY:	Author
DRAWING SCALE:	AS NOTED
PTN: 61721-83	FILE NO: 7-H4

CONSTRUCTION DOCUMENTS

JUNE 24, 2022

SHEET TITLE

SECOND FLOOR PLAN BLDG. A LIGHTING

SHEET NUMBER

E-A2.2

LIBERTY HS NEW CLASSROOM BUILDINGS - 221060 R20

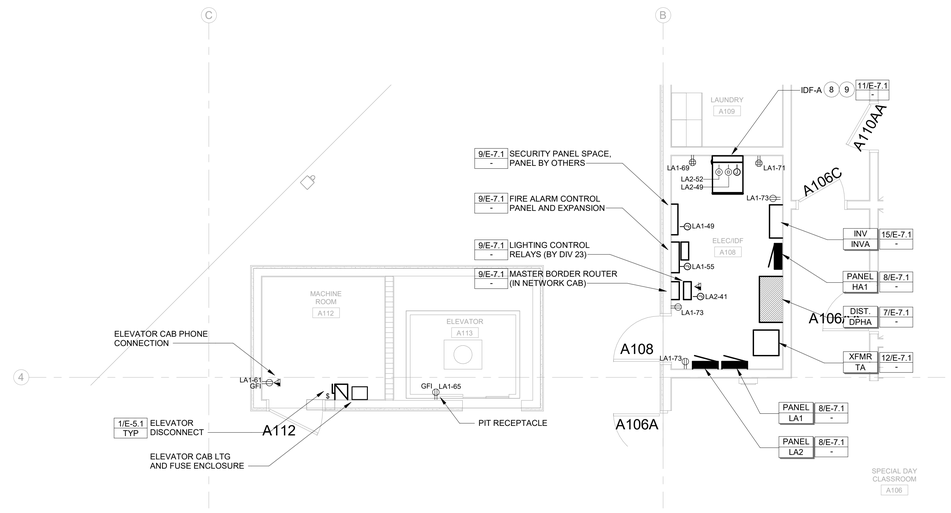

2 PARTIAL PLAN - BLDG A - ELEC/IDF RM
1/4" = 1'-0"

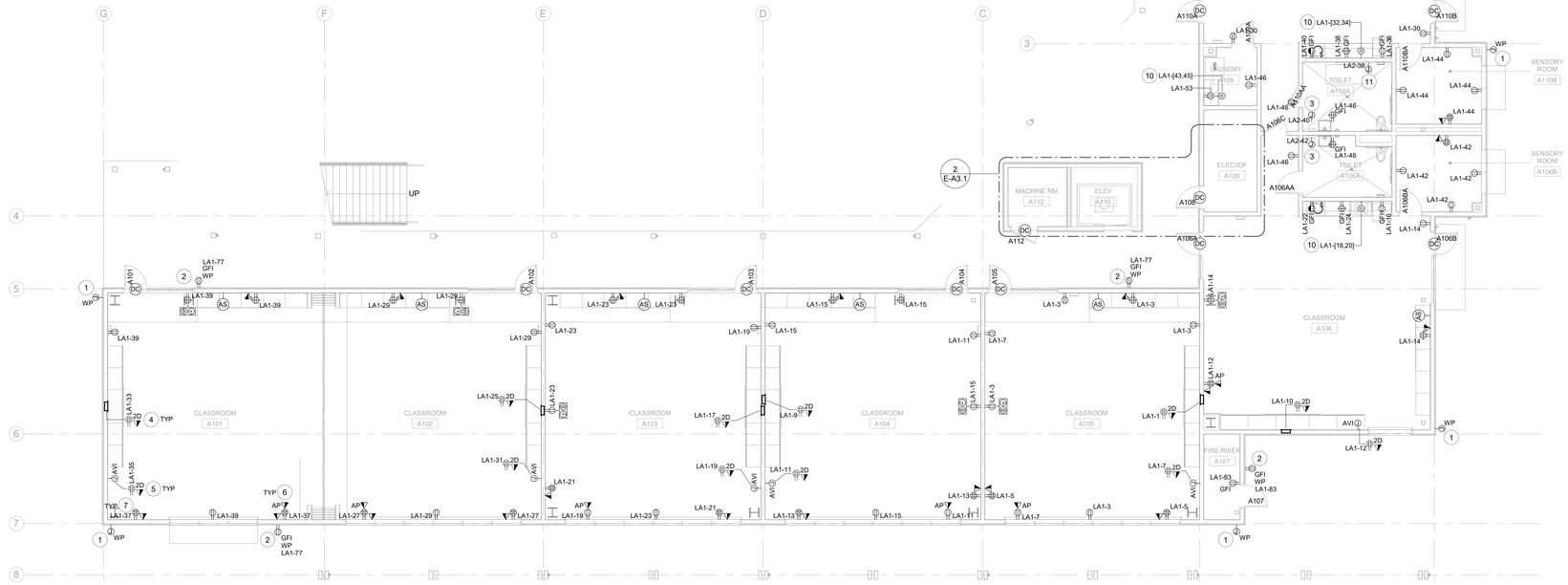

1 FIRST FLOOR PLAN - BLDG A - POWER & SIGNAL
1/8" = 1'-0"

PROJECT NUMBERED NOTES

1. SECURITY CAMERA LOCATION. CAMERAS TO BE PROVIDED AND INSTALLED BY DISTRICT. PROVIDE 4" JUNCTION BOX AND 1" C. WITH CAT6A BACK TO IDF 'A'. VERIFY EXACT LOCATION AND HEIGHT REQUIREMENT WITH ARCHITECT PRIOR TO ROUGH-IN.
2. EXTERIOR RECEPTACLE, IN WEATHERPROOF FLUSH LOCKABLE ENCLOSURE. HUBBELL #4600RAC (OR EQUAL).
3. 120V ELECTRIC HAND DRYER. MANUFACTURED BY WORLD DRYER. VERDEDRI MODEL Q-973A. BRUSHED STAINLESS STEEL. S.A.D. FOR MOUNTING LOCATION.
4. LOCATION OF SHORT THROW PROJECTOR: PROVIDE 4-GANG HUBBELL AV BACKBOX #NSAV124M DOUBLE DUPLEX 120V OUTLET, DATA JACK, AND AV PASS THRU CABLING WHIPS, FOR CONNECTION TO SHORT THROW PROJECTOR ASSEMBLY. PROJECTOR AND MOUNT BY OTHERS. PROJECTOR WEIGHT IS LESS THAN 20LB.
5. LOCATION OF TEACHERS CONTROLS "AVI": PROVIDE 4-GANG HUBBELL AV BACKBOX #NSAV124M WITH DOUBLE DUPLEX 120V OUTLET, DATA JACKS, AND AV INPUT PASS THRU CABLING ((2) HDMI, (1) 3.5mm AUDIO), INSET INTO WALL. COORDINATE LOCATION WITH ARCHITECT. CONTINUE 1-1/2" CONDUIT FROM AV INPUTS TO SHORT THROW PROJECTOR AV BOX LOCATION.
6. MOUNT WIRELESS ACCESS POINT AT 96". PROVIDE CAT6A CABLING.
7. TEACHER DESK LOCATION
8. WALL MOUNT, FLOOR SUPPORTED IDF CABINET.
9. PROVIDE (2) DEDICATED 120V, 30A, L5-30R RECEPTACLES AND J-BOX WITH #2AWG G. TO NEAREST BUILDING ELECTRODE. LOCATE EQUIPMENT WITHIN IDF CABINET (OR RACK).
10. SPECIAL EQUIPMENT - PROVIDE AND INSTALL (2) #8 + (1) #10G. IN 1" C. VERIFY EXACT RECEPTACLE NEMA TYPE REQUIRED, FOR DISTRICT PROVIDED EQUIPMENT.
11. LOCATE AT LIFT CHANGING TABLE, CONNECT COMPLETE. COORDINATE WITH VENDOR SHOP DRAWINGS PRIOR TO ROUGH-IN.

IDENTIFICATION STAMP
DIV. OF THE STATE ARCHITECT
APP: 01-119994 INC:
REVIEWED FOR
SS ☑ FLS ☑ ACS ☑
DATE: 08/16/2022

QUATTROCCHI KWOK ARCHITECTS
Main:
636 Fifth Street, Santa Rosa, CA 95404
East Bay:
55 Harrison Street, Suite 525,
Oakland, CA 94607
(707) 576-0829

O'MAHONY & MYER
ELECTRICAL ENGINEERING & LIGHTING DESIGN
4340 REDWOOD HWY., SUITE 245
SAN RAFAEL, CALIFORNIA 94903
(415) 492-0420/FAX (415) 479-9662

REGISTERED PROFESSIONAL ENGINEER
JOHN J. COLENBRANDER
No. 14738
Exp. 6/23
ELECTRICAL
STATE OF CALIFORNIA

LIBERTY HIGH SCHOOL

NEW CLASSROOM BUILDING

850 2ND STREET
BRENTWOOD, CA
94513

LIBERTY UNION HIGH SCHOOL DISTRICT

DSA APP NO. 01-119994
ARCH PROJECT NO: 1719.00
DRAWN BY: JK
DRAWING SCALE: AS NOTED
PTN: 61721-83 FILE NO: 7-H4
CONSTRUCTION DOCUMENTS
JUNE 24, 2022

SHEET TITLE
FIRST FLOOR PLAN BLDG. A POWER & SIGNAL

SHEET NUMBER
E-A3.1

TRUE NORTH

LIBERTY HS NEW CLASSROOM BUILDINGS - 221060 R20

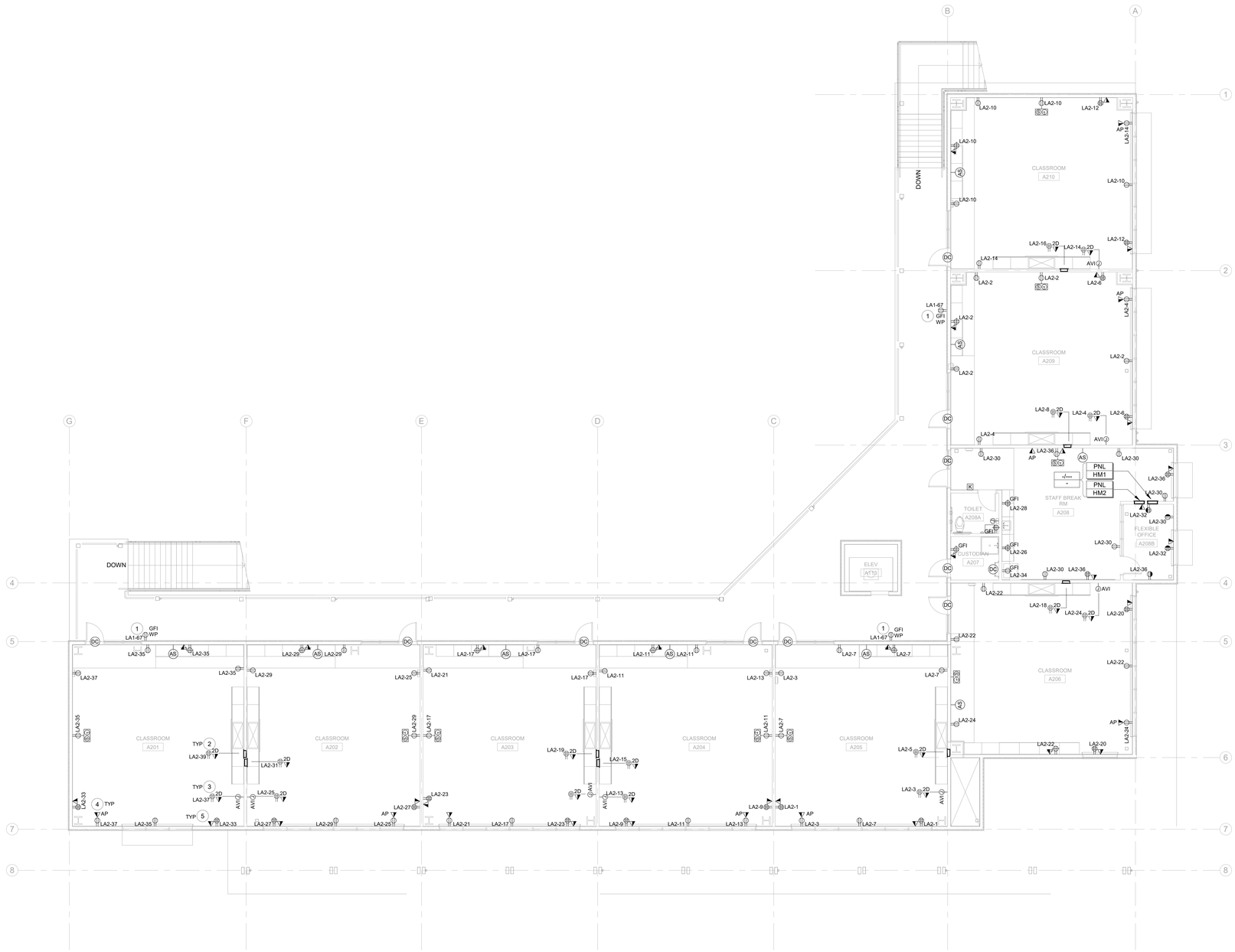

1 SECOND FLOOR PLAN - BLDG A - POWER & SIGNAL
1/8" = 1'-0"

PROJECT NUMBERED NOTES

1. EXTERIOR RECEPTACLE, IN WEATHERPROOF FLUSH LOCKABLE ENCLOSURE. HUBBELL #4600RAC (OR EQUAL).
2. LOCATION OF SHORT THROW PROJECTOR: PROVIDE 4-GANG HUBBELL AV BACKBOX #NSAV124M DOUBLE DUPLEX 120V OUTLET, DATA JACK, AND AV PASS THRU CABLING WHIPS, FOR CONNECTION TO SHORT THROW PROJECTOR ASSEMBLY. PROJECTOR AND MOUNT BY OTHERS. PROJECTOR WEIGHT IS LESS THAN 20LB.
3. LOCATION OF TEACHERS CONTROLS "AVI": PROVIDE 4-GANG HUBBELL AV BACKBOX #NSAV124M WITH DOUBLE DUPLEX 120V OUTLET, DATA JACKS, AND AV INPUT PASS THRU CABLING ((2) HDMI, (1) 3.5mm AUDIO), INSET INTO WALL. COORDINATE LOCATION WITH ARCHITECT. CONTINUE 1-1/2" CONDUIT FROM AV INPUTS TO SHORT THROW PROJECTOR AV BOX LOCATION.
4. MOUNT WIRELESS ACCESS POINT AT 96". PROVIDE CAT6A CABLING.
5. TEACHER DESK LOCATION

IDENTIFICATION STAMP
DIV. OF THE STATE ARCHITECT
APP: 01-119994 INC:
REVIEWED FOR
SS ☑ FLS ☑ ACS ☑
DATE: 08/16/2022

QUATTROCCHI KWOK ARCHITECTS
Main:
636 Fifth Street, Santa Rosa, CA 95404
East Bay:
55 Harrison Street, Suite 525,
Oakland, CA 94607
(707) 576-0829

O'MAHONY & MYER
ELECTRICAL ENGINEERING & LIGHTING DESIGN
4340 REDWOOD HWY., SUITE 245
SAN RAFAEL, CALIFORNIA 94903
(415) 492-0420/FAX (415) 479-9662
REGISTERED PROFESSIONAL ENGINEER
JOHN J. COLENBRANDER
No. 14738
Exp. 6/23
ELECTRICAL
STATE OF CALIFORNIA

LIBERTY HIGH SCHOOL

NEW CLASSROOM BUILDING

850 2ND STREET
BRENTWOOD, CA
94513

LIBERTY UNION HIGH SCHOOL DISTRICT

DSA APP NO. 01-119994

ARCH PROJECT NO:	1719.00
DRAWN BY:	Author
DRAWING SCALE:	AS NOTED
PTN: 61721-83	FILE NO: 7-H4

CONSTRUCTION DOCUMENTS

JUNE 24, 2022

SHEET TITLE

SECOND FLOOR PLAN BLDG. A POWER & SIGNAL

SHEET NUMBER

E-A3.2

TRUE NORTH

LIBERTY HS NEW CLASSROOM BUILDINGS - 221060 R20

MECHANICAL EQUIPMENT FEEDER SCHEDULE - BLDG A - FIRST FLOOR								
UNIT TYPE	UNIT #	VOLTAGE	POLES	FLA	kVA	WIRE & CONDUIT	PANEL	CKT #
EF	106-A	120 V	1	0.2 A	0.02 kVA	(2) #10 + (1) #10G. IN 3/4" C.	LA1	56
EF	109-A	120 V	1	0.2 A	0.02 kVA	(2) #10 + (1) #10G. IN 3/4" C.	LA1	56
EF	110-A	120 V	1	0.2 A	0.02 kVA	(2) #10 + (1) #10G. IN 3/4" C.	LA1	56
FC	A108	0 V	1	0 A	0.00 kVA	3/4" C. FROM OUTDOOR UNIT.		
					0.07 kVA			

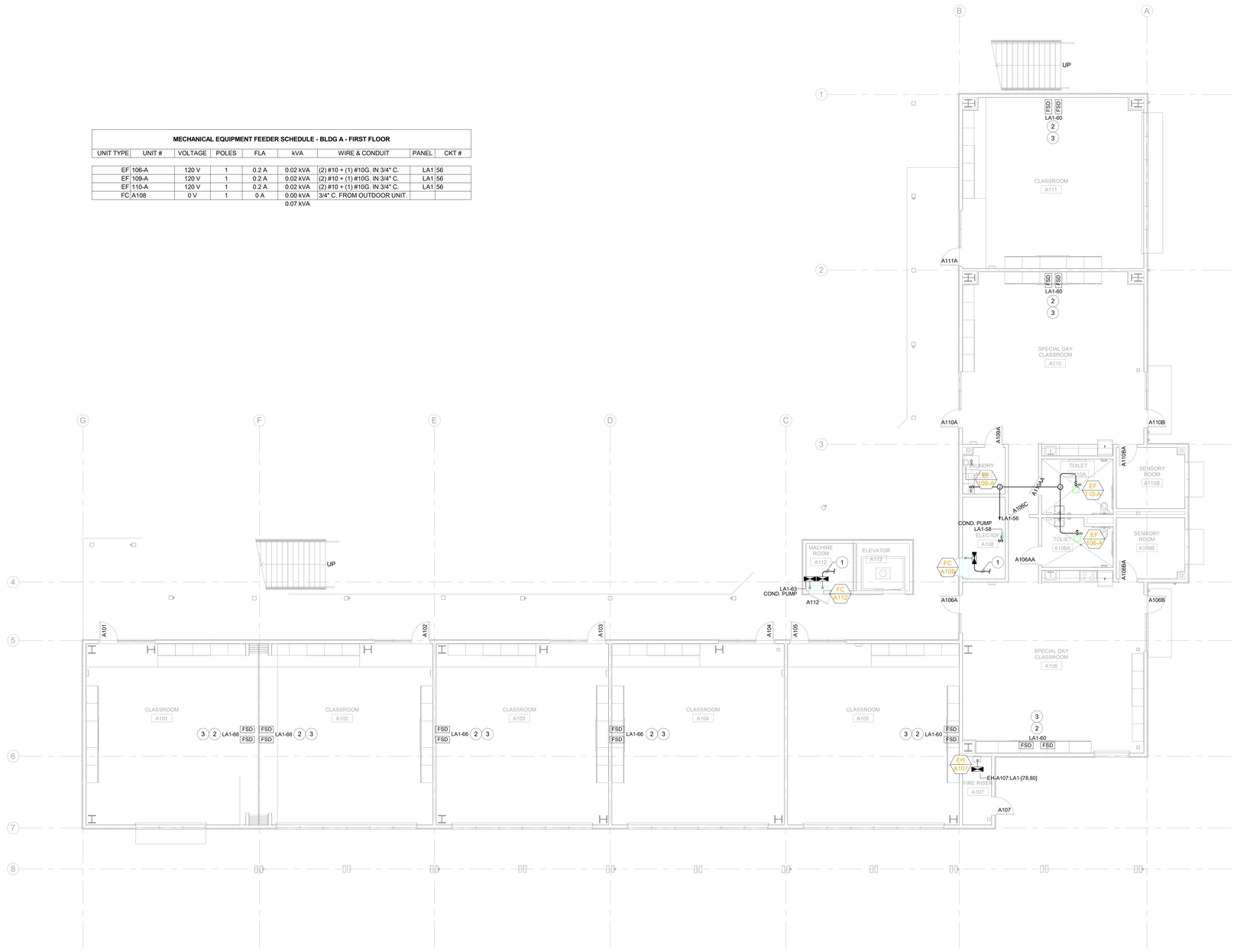

1 FIRST FLOOR PLAN - BLDG A - MECH/PLUM CONNECTIONS
1/8" = 1'-0"

SHEET NUMBERED NOTES

1. PROVIDE AND INSTALL 3/4" RACEWAY BETWEEN RESPECTIVE INDOOR AND OUTDOOR UNIT. SEE MECHANICAL EQUIPMENT FEEDER SCHEDULE FOR BRANCH CIRCUIT WIRING.
2. FIRE SMOKE DAMPER SHALL BE PROVIDED AND INSTALLED BY MECHANICAL CONTRACTOR, CONNECTED COMPLETE TO BRANCH CIRCUIT AND FIRE ALARM RELAY MODULE BY ELECTRICAL CONTRACTOR. FIRE ALARM RELAY SHALL INTERRUPT POWER TO DAMPER BRANCH CIRCUIT, TO FACILITATE DAMPER CLOSURE. LOCATE RELAY IN ELECTRICAL ROOM, SEE FIRE ALARM PLANS.
3. PROVIDE MOTOR RATED TOGGLE SWITCH AT EACH FSD, WITH NAMEPLATE IDENTIFYING BRANCH CIRCUIT AND FIRE ALARM RELAY MODULE ID.

IDENTIFICATION STAMP
DIV. OF THE STATE ARCHITECT
APP: 01-119994 INC:
REVIEWED FOR
SS ☑ FLS ☑ ACS ☑
DATE: 08/16/2022

QUATTROCCHI KWOK ARCHITECTS
Main:
636 Fifth Street, Santa Rosa, CA 95404
East Bay:
55 Harrison Street, Suite 525,
Oakland, CA 94607
(707) 576-0829

O'MAHONY & MYER
ELECTRICAL ENGINEERING & LIGHTING DESIGN
4340 REDWOOD HWY., SUITE 245
SAN RAFAEL, CALIFORNIA 94903
(415) 492-0420/FAX (415) 479-9662

REGISTERED PROFESSIONAL ENGINEER
PETER J. COLEMBRANDER
No. 14738
Exp. 6/23
ELECTRICAL
STATE OF CALIFORNIA

LIBERTY HIGH SCHOOL

NEW CLASSROOM BUILDING

850 2ND STREET
BRENTWOOD, CA
94513

LIBERTY UNION HIGH SCHOOL DISTRICT

DSA APP NO. 01-119994

ARCH PROJECT NO:	1719.00
DRAWN BY:	Author
DRAWING SCALE:	AS NOTED
PTN: 61721-83	FILE NO: 7-H4

CONSTRUCTION DOCUMENTS

JUNE 24, 2022

SHEET TITLE

FIRST FLOOR PLAN BLDG. A MECH/PLUM CONNECTIONS

SHEET NUMBER

E-A4.1

TRUE NORTH

MECHANICAL EQUIPMENT FEEDER SCHEDULE - BLDG A - SECOND FLOOR

UNIT TYPE	UNIT #	VOLTAGE	POLES	FLA	kVA	WIRE & CONDUIT	PANEL	CKT #
EF	207-A	120 V	1	0.2 A	0.02 kVA	(2) #10 + (1) #10G. IN 3/4" C.	LA1	62
EF	208-A	120 V	1	0.2 A	0.02 kVA	(2) #10 + (1) #10G. IN 3/4" C.	LA1	62
EWH	A207	480 V	2	6.25 A	3.00 kVA	(2) #8 + (1) #10G. IN 1" C.	DPHA	10
					3.05 kVA			

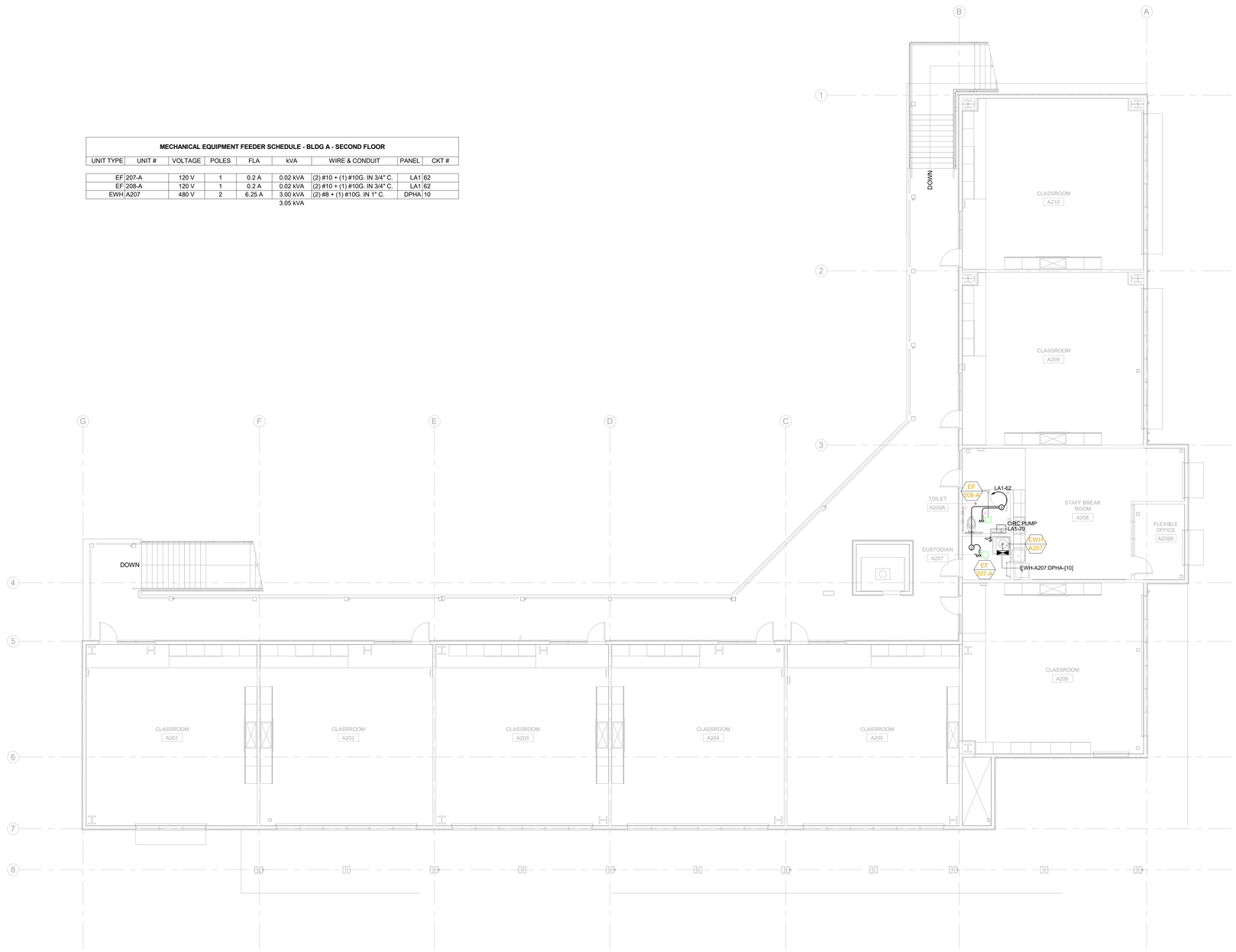

1 SECOND FLOOR PLAN - BLDG A - MECH/PLUM CONNECTIONS
1/8" = 1'-0"

IDENTIFICATION STAMP
DIV. OF THE STATE ARCHITECT
APP: 01-119994 INC:
REVIEWED FOR
SS ☑ FLS ☑ ACS ☑
DATE: 08/16/2022

QUATTROCCHI KWOK ARCHITECTS
Main:
636 Fifth Street, Santa Rosa, CA 95404
East Bay:
55 Harrison Street, Suite 525,
Oakland, CA 94607
(707) 576-0829

O'MAHONY & MYER
ELECTRICAL ENGINEERING & LIGHTING DESIGN
4340 REDWOOD HWY., SUITE 245
SAN RAFAEL, CALIFORNIA 94903
(415) 492-0420 FAX (415) 479-9662

REGISTERED PROFESSIONAL ENGINEER
RICHARD J. COLEMAN III
No. 14738
Exp. 6/23
ELECTRICAL
STATE OF CALIFORNIA

LIBERTY HIGH SCHOOL

NEW CLASSROOM BUILDING

850 2ND STREET
BRENTWOOD, CA
94513

LIBERTY UNION
HIGH SCHOOL
DISTRICT

DSA APP NO. 01-119994

ARCH PROJECT NO:	1719.00
DRAWN BY:	Author
DRAWING SCALE:	AS NOTED
PTN: 61721-83	FILE NO: 7-H4

CONSTRUCTION DOCUMENTS

JUNE 24, 2022

SHEET TITLE

SECOND FLOOR PLAN BLDG A. MECH/PLUM CONNECTIONS

SHEET NUMBER

E-A4.2

TRUE NORTH

LIBERTY HS NEW CLASSROOM BUILDINGS - 221060 R20

MECHANICAL EQUIPMENT FEEDER SCHEDULE - BLDG A - ROOF

UNIT TYPE	UNIT #	VOLTAGE	POLES	FLA	kVA	WIRE & CONDUIT	PANEL	CKT #
CU	A108	208 V	2	14 A	2.91 kVA	(2) #10 + (1) #10G. IN 1" C.	LA1	74,76
EF	A106	120 V	1	0.2 A	0.02 kVA	(2) #10 + (1) #10G. IN 3/4" C.	LA1	72
HP	A101	480 V	3	24 A	19.95 kVA	(3) #8 + (1) #10G. IN 1-1/4" C.	HM1	1,3,5
HP	A102	480 V	3	24 A	19.95 kVA	(3) #8 + (1) #10G. IN 1-1/4" C.	HM1	2,4,6
HP	A103	480 V	3	24 A	19.95 kVA	(3) #8 + (1) #10G. IN 1-1/4" C.	HM1	7,9,11
HP	A104	480 V	3	24 A	19.95 kVA	(3) #8 + (1) #10G. IN 1-1/4" C.	HM1	8,10,12
HP	A105	480 V	3	24 A	19.95 kVA	(3) #8 + (1) #10G. IN 1-1/4" C.	HM1	13,15,17
HP	A106	480 V	3	24 A	19.95 kVA	(3) #8 + (1) #10G. IN 1-1/4" C.	HM1	14,16,18
HP	A109	480 V	3	24 A	19.95 kVA	(3) #8 + (1) #10G. IN 1-1/4" C.	HM1	19,21,23
HP	A110	480 V	3	24 A	19.95 kVA	(3) #8 + (1) #10G. IN 1-1/4" C.	HM1	20,22,24
HP	A201	480 V	3	24 A	19.95 kVA	(3) #8 + (1) #10G. IN 1-1/4" C.	HM2	1,3,5
HP	A202	480 V	3	24 A	19.95 kVA	(3) #8 + (1) #10G. IN 1-1/4" C.	HM2	2,4,6
HP	A203	480 V	3	24 A	19.95 kVA	(3) #8 + (1) #10G. IN 1-1/4" C.	HM2	7,9,11
HP	A204	480 V	3	24 A	19.95 kVA	(3) #8 + (1) #10G. IN 1-1/4" C.	HM2	8,10,12
HP	A205	480 V	3	24 A	19.95 kVA	(3) #8 + (1) #10G. IN 1-1/4" C.	HM2	13,15,17
HP	A206	480 V	3	24 A	19.95 kVA	(3) #8 + (1) #10G. IN 1-1/4" C.	HM2	14,16,18
HP	A208	480 V	3	18.4 A	15.30 kVA	(3) #8 + (1) #10G. IN 1-1/4" C.	HM2	19,21,23
HP	A209	480 V	3	24 A	19.95 kVA	(3) #8 + (1) #10G. IN 1-1/4" C.	HM2	20,22,24
HP	A210	480 V	3	24 A	19.95 kVA	(3) #8 + (1) #10G. IN 1-1/4" C.	HM2	25,27,29
HP EX	A101	480 V	3	2.5 A	2.08 kVA	SEE HP UNIT	HM1	1,3,5
HP EX	A102	480 V	3	2.5 A	2.08 kVA	SEE HP UNIT	HM1	2,4,6
HP EX	A103	480 V	3	2.5 A	2.08 kVA	SEE HP UNIT	HM1	7,9,11
HP EX	A104	480 V	3	2.5 A	2.08 kVA	SEE HP UNIT	HM1	8,10,12
HP EX	A105	480 V	3	2.5 A	2.08 kVA	SEE HP UNIT	HM1	13,15,17
HP EX	A106	480 V	3	2.5 A	2.08 kVA	SEE HP UNIT	HM1	14,16,18
HP EX	A109	480 V	3	2.5 A	2.08 kVA	SEE HP UNIT	HM1	19,21,23
HP EX	A110	480 V	3	2.5 A	2.08 kVA	SEE HP UNIT	HM1	20,22,24
					354.11 kVA			

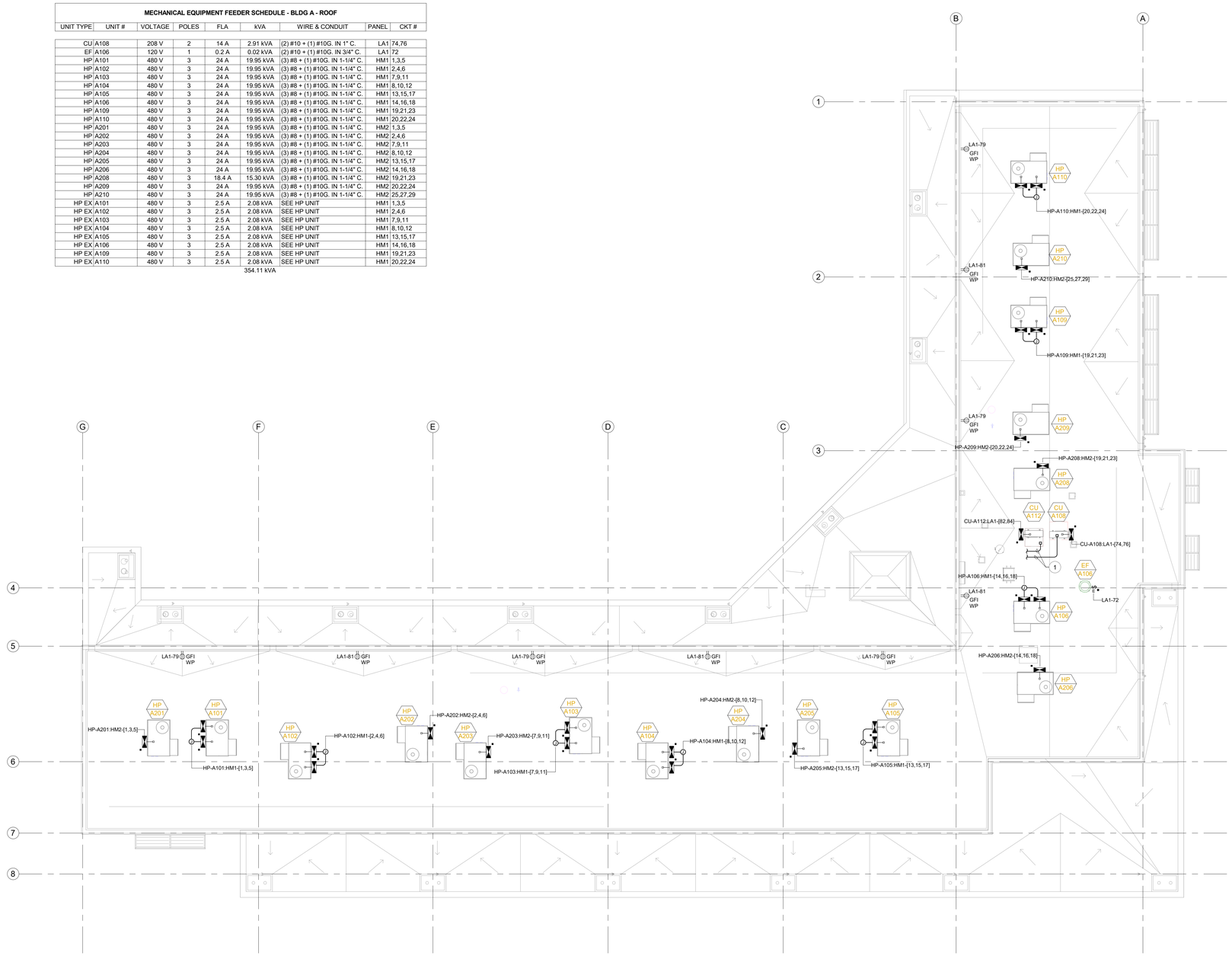

1 ROOF PLAN - BLDG A - MECH/PLUM CONNECTIONS
1/8" = 1'-0"

SHEET NUMBERED NOTES

1 PROVIDE AND INSTALL 3/4" RACEWAY BETWEEN RESPECTIVE INDOOR AND OUTDOOR UNIT. SEE MECHANICAL EQUIPMENT FEEDER SCHEDULE FOR BRANCH CIRCUIT WIRING.

IDENTIFICATION STAMP
DIV. OF THE STATE ARCHITECT
APP: 01-119994 INC:
REVIEWED FOR
SS ☑ FLS ☑ ACS ☑
DATE: 08/16/2022

QUATTROCCHI KWOK ARCHITECTS
Main:
636 Fifth Street, Santa Rosa, CA 95404
East Bay:
55 Harrison Street, Suite 525,
Oakland, CA 94607
(707) 576-0829

O'MAHONY & MYER
ELECTRICAL ENGINEERING & LIGHTING DESIGN
4340 REDWOOD HWY., SUITE 245
SAN RAFAEL, CALIFORNIA 94903
(415) 492-0420 FAX (415) 479-9662
REGISTERED PROFESSIONAL ENGINEER
ROY J. COLEMAN
No. 16738
Exp. 6/23
ELECTRICAL
STATE OF CALIFORNIA

LIBERTY HIGH SCHOOL

NEW CLASSROOM BUILDING

850 2ND STREET
BRENTWOOD, CA
94513

LIBERTY UNION
HIGH SCHOOL
DISTRICT

DSA APP NO. 01-119994
ARCH PROJECT NO: 1719.00
DRAWN BY: Author
DRAWING SCALE: AS NOTED
PTN: 61721-83 FILE NO: 7-H4
CONSTRUCTION DOCUMENTS
JUNE 24, 2022

SHEET TITLE
ROOF PLAN
BLDG A.
MECH/PLUM
CONNECTIONS

SHEET NUMBER
E-A4.3

TRUE NORTH

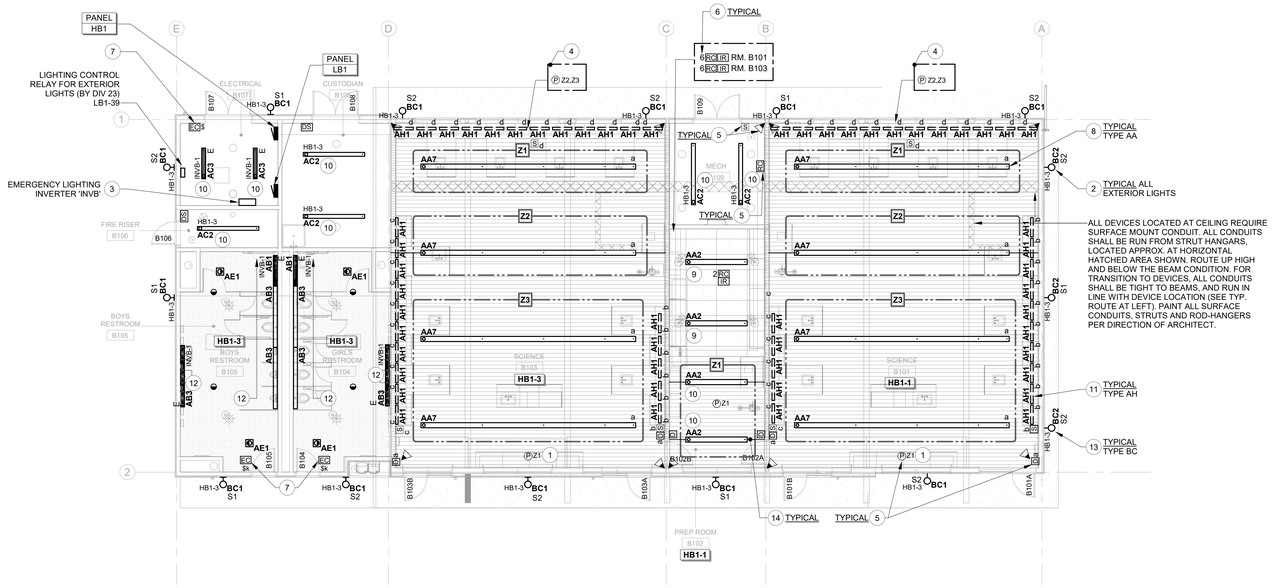

1 FLOOR PLAN - BLDG B - LIGHTING
1/8" = 1'-0"

SHEET NUMBERED NOTES

1. WATTSTOPPER LMLS-500 DAYLIGHT SENSOR AND LMLS-MB2 MOUNTING BRACKET. SEE MOUNTING DETAIL 7/E-7.3. COORDINATE WITH ALL OTHER TRADES TO ASSURE SENSOR HAS UNOBSTRUCTED 'VIEW' OUT WINDOW.
2. ROUTE CIRCUIT HOME TO PANEL VIA EXTERIOR LIGHTING CONTROL RELAYS IN ELECTRIC ROOM. SEE DIAGRAM 3/E-5.3. RELAYS SUPPLIED AND INSTALLED BY DIVISION 23. TYPICAL FOR ALL EXTERIOR LIGHTING.
3. SEE INVERTER SPECIFICATIONS ON E-5.3. SEE 4/E-7.3.
4. WATTSTOPPER LMLS-500 DAYLIGHT SENSOR AND LMLS-MB2 MOUNTING BRACKET. SEE MOUNTING DETAIL 6/E-7.3. COORDINATE WITH ALL OTHER TRADES TO ASSURE SENSOR HAS UNOBSTRUCTED 'VIEW' OUT WINDOW.
5. PROVIDE AND INSTALL DIMMER SWITCH(ES), OCCUPANCY SENSOR(S), ISOLATED RELAY(S), PHOTOSENSOR(S), AND ROOM CONTROLLERS WHERE SHOWN. SEE DETAILS 3/E-5.2 AND 4/E-5.2. MOUNT ROOM CONTROLLER ABOVE ACCESSIBLE CEILING WHEREVER POSSIBLE.
6. NUMERAL ADJACENT TO ROOM CONTROLLER INDICATES NUMBER OF CONTROL ZONES REQUIRED. VENDOR OR CONTRACTOR TO PROVIDE QUANTITY OF ROOM CONTROLLERS REQUIRED FOR THE NUMBER OF CONTROLLED ZONES.
7. PROVIDE AN EMERGENCY LIGHTING CONTROL MODULE FOR ALL SWITCHED LIGHT FIXTURES ON EMERGENCY INVERTER. THIS INCLUDES EMERGENCY FIXTURES CONTROLLED BY OCCUPANCY SENSORS. SEE 2/E-5.2 AND 1/E5.3. MOUNT CONTROL MODULE/TEST SWITCH 7'-6" A.F.F. AND ALIGN WITH LIGHT SWITCH BELOW WHEREVER POSSIBLE, OR ELSE LABEL MODULE WITH CORRESPONDING ROOM.
8. PENDANT MOUNTED WITH 48" SUSPENSION FROM THE CEILING TO THE BOTTOM OF THE LUMINAIRE.
9. PENDANT MOUNTED AT 7'-6" A.F.F. TO THE BOTTOM OF THE LUMINAIRE.
10. PENDANT MOUNTED AT 9'-0" A.F.F. TO THE BOTTOM OF THE LUMINAIRE.
11. UNDERCABINET LIGHT. SEE DETAIL 13/E-7.2.
12. WALL MOUNTED AT 8'-0" A.F.F. TO THE CENTERLINE OF THE LUMINAIRE.
13. WALL MOUNTED AT 9'-0" A.F.F. TO THE BOTTOM OF THE LUMINAIRE.
14. SWAY BRACING TO PREVENT SIDEWAYS SHIFTING. SEE DETAIL 9/E-7.2.

IDENTIFICATION STAMP
DIV. OF THE STATE ARCHITECT
APP: 01-119994 INC:
REVIEWED FOR
SS ☑ FLS ☑ ACS ☑
DATE: 08/16/2022

QUATTROCCHI KWOK ARCHITECTS
Main:
636 Fifth Street, Santa Rosa, CA 95404
East Bay:
55 Harrison Street, Suite 525,
Oakland, CA 94607
(707) 576-0829

O'MAHONY & MYER
ELECTRICAL ENGINEERING & LIGHTING DESIGN
4340 REDWOOD HWY., SUITE 245
SAN RAFAEL, CALIFORNIA 94903
(415) 492-0420 FAX (415) 479-9662

REGISTERED PROFESSIONAL ENGINEER
ERIC J. COLENBRANDER
No. 14738
Exp. 6/23
ELECTRICAL
STATE OF CALIFORNIA

LIBERTY HIGH SCHOOL

NEW CLASSROOM BUILDING

850 2ND STREET
BRENTWOOD, CA
94513

LIBERTY UNION
HIGH SCHOOL
DISTRICT

DSA APP NO. 01-119994

ARCH PROJECT NO:	1719.00
DRAWN BY:	Author
DRAWING SCALE:	AS NOTED
PTN: 61721-83	FILE NO: 7-H4

CONSTRUCTION DOCUMENTS

JUNE 24, 2022

SHEET TITLE

FLOOR PLAN
BLDG. B
LIGHTING

SHEET NUMBER

E-B2.1

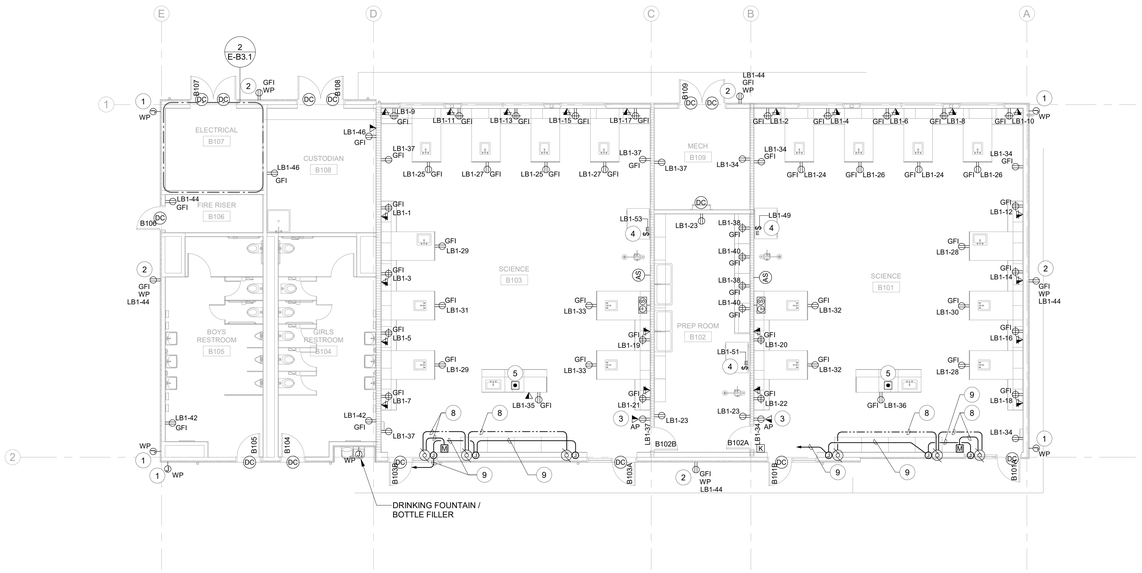

1 FLOOR PLAN - BLDG B - POWER & SIGNAL
1/8" = 1'-0"

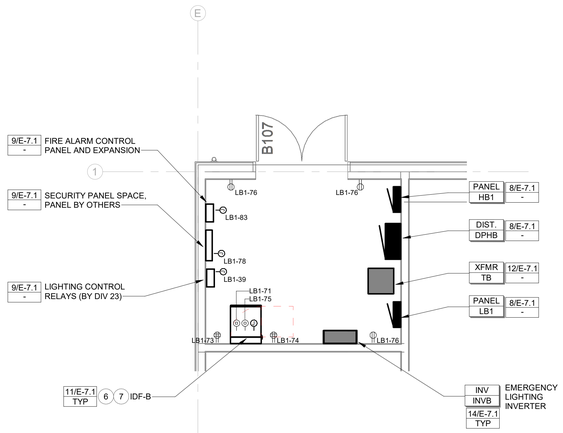

2 PARTIAL PLAN - BLDG B - ELEC/IDF RM
1/4" = 1'-0"

PROJECT NUMBERED NOTES

1. WATTSTOPPER LMLS-500 DAYLIGHT SENSOR AND LMLS-MB2 MOUNTING BRACKET. SEE MOUNTING DETAIL 7/E-7.3. COORDINATE WITH ALL OTHER TRADES TO ASSURE SENSOR HAS UNOBSTRUCTED 'VIEW' OUT WINDOW.
2. EXTERIOR RECEPTACLE, IN WEATHERPROOF FLUSH LOCKABLE ENCLOSURE. HUBBELL #4600RAC (OR EQUAL).
3. MOUNT WIRELESS ACCESS POINT AT 96". PROVIDE CAT6A CABLING.
4. WATTSTOPPER LMLS-500 DAYLIGHT SENSOR AND LMLS-MB2 MOUNTING BRACKET. SEE MOUNTING DETAIL 6/E-7.3. COORDINATE WITH ALL OTHER TRADES TO ASSURE SENSOR HAS UNOBSTRUCTED 'VIEW' OUT WINDOW.
5. PROVIDE AND INSTALL FLUSH MOUNTED, MAINTAINED CONTACT (PUSH/PULL ON/OFF), 120VAC, RED, GAS SHUT-OFF MUSHROOM SWITCH IN FACE OF TEACHER CASEWORK, JUST BELOW COUNTER LEVEL (SQUARE D #9001KR8RH13 OR EQUAL IN FLUSH 1-GANG BOX AND DEVICE PLATE), WITH 120V CIRCUIT WIRED TO GAS VALVE AT WALL. SEE PLUMBING PLANS FOR GAS VALVE LOCATION AND SPEC AT WALL BEHIND TEACHER DESK. PROVIDE ENGRAVED OR PERMANENT FLAT ADHESIVE PRE-PRINTED STICKER TO IDENTIFY "GAS VALVE SHUT-OFF" AND "PUSH OFF / PULL ON". LOSS OF POWER (SWITCH PUSHED) TO DE-ENERGIZE GAS VALVE.
6. WALL MOUNT, FLOOR SUPPORTED IDF CABINET.
7. PROVIDE (2) DEDICATED 120V, 30A, L5-30R RECEPTACLES AND J-BOX WITH #2AWG G. TO NEAREST BUILDING ELECTRODE. LOCATE EQUIPMENT WITHIN IDF CABINET (OR RACK).
8. PROVIDE AND INSTALL 3/4" RACEWAY FOR LOW VOLTAGE SHADE CABLING. CABLING BY VENDOR. COORDINATE WITH VENDOR SHOP DRAWINGS PRIOR TO ROUGH-IN.
9. PROVIDE AND INSTALL 120V BRANCH CIRCUIT FOR MOTORIZED SHADE SYSTEM.

IDENTIFICATION STAMP
DIV. OF THE STATE ARCHITECT
APP: 01-119994 INC:
REVIEWED FOR
SS ☑ FLS ☑ ACS ☑
DATE: 08/16/2022

QUATTROCCHI KWOK ARCHITECTS
Main:
636 Fifth Street, Santa Rosa, CA 95404
East Bay:
55 Harrison Street, Suite 525,
Oakland, CA 94607
(707) 576-0829

O'MAHONY & MYER
ELECTRICAL ENGINEERING & LIGHTING DESIGN
4340 REDWOOD HWY., SUITE 245
SAN RAFAEL, CALIFORNIA 94903
(415) 492-0420 FAX (415) 479-9662

REGISTERED PROFESSIONAL ENGINEER
JOHN J. COLENBRANDER
No. 14738
Exp. 6/23
ELECTRICAL
STATE OF CALIFORNIA

LIBERTY HIGH SCHOOL

NEW CLASSROOM BUILDING

850 2ND STREET
BRENTWOOD, CA
94513

LIBERTY UNION HIGH SCHOOL DISTRICT

DSA APP NO. 01-119994

ARCH PROJECT NO:	1719.00
DRAWN BY:	Author
DRAWING SCALE:	AS NOTED
PTN: 61721-83	FILE NO: 7-H4

CONSTRUCTION DOCUMENTS

JUNE 24, 2022

SHEET TITLE

FLOOR PLAN
BLDG. B POWER
& SIGNAL

SHEET NUMBER

E-B3.1

LIBERTY HS NEW CLASSROOM BUILDINGS - 221060 R20

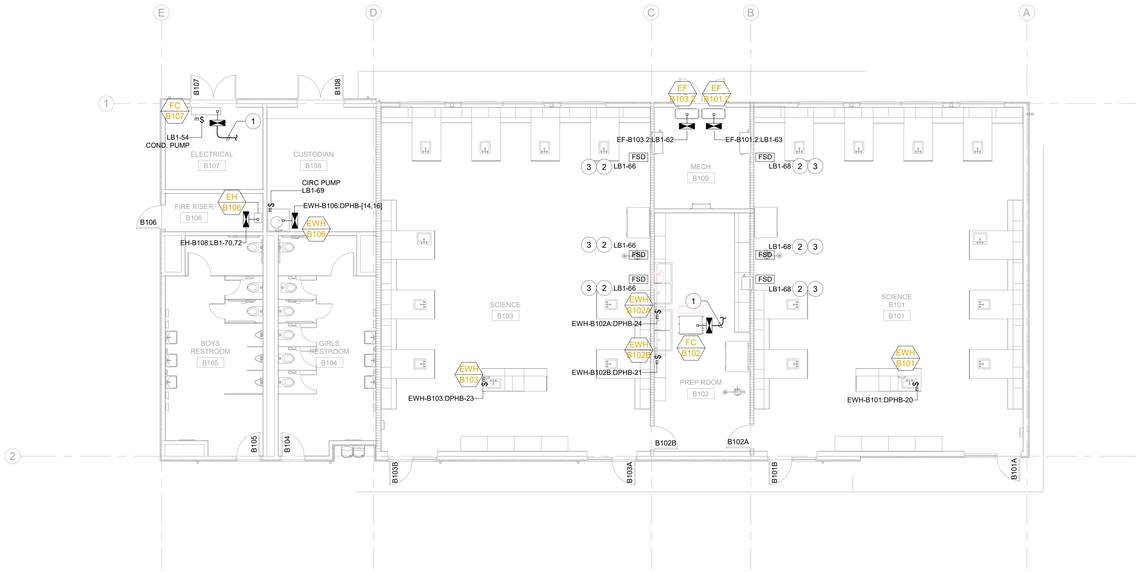

1 FLOOR PLAN - BLDG B - MECH/PLUM CONNECTIONS
1/8" = 1'-0"

MECHANICAL EQUIPMENT FEEDER SCHEDULE - BLDG B

UNIT TYPE	UNIT #	VOLTAGE	POLES	FLA	kVA	WIRE & CONDUIT	PANEL	CKT #
EF	B101.2	120 V	1	11.6 A	1.39 kVA	(2) #10 + (1) #10G. IN 3/4" C.	LB1	63
EF	B103.2	120 V	1	11.6 A	1.39 kVA	(2) #10 + (1) #10G. IN 3/4" C.	LB1	62
EWH	B101	277 V	1	15.2 A	4.21 kVA	(2) #10 + (1) #10G. IN 3/4" C.	DPHB	20
EWH	B102A	277 V	1	15.2 A	4.21 kVA	(2) #10 + (1) #10G. IN 3/4" C.	DPHB	24
EWH	B102B	277 V	1	15.2 A	4.21 kVA	(2) #10 + (1) #10G. IN 3/4" C.	DPHB	21
EWH	B103	277 V	1	15.2 A	4.21 kVA	(2) #10 + (1) #10G. IN 3/4" C.	DPHB	23
EWH	B106	480 V	2	6.25 A	3.00 kVA	(2) #8 + (1) #10G. IN 1" C.	DPHB	14,16
FC	B102	0 V	1	0 A	0.00 kVA	3/4" C. FROM OUTDOOR UNIT.		
FC	B107	0 V	1	0 A	0.00 kVA	3/4" C. FROM OUTDOOR UNIT.		
					22.63 kVA			

SHEET NUMBERED NOTES

1. PROVIDE AND INSTALL 3/4" RACEWAY BETWEEN RESPECTIVE INDOOR AND OUTDOOR UNIT. SEE MECHANICAL EQUIPMENT FEEDER SCHEDULE FOR BRANCH CIRCUIT WIRING.
2. FIRE SMOKE DAMPER SHALL BE PROVIDED AND INSTALLED BY MECHANICAL CONTRACTOR, CONNECTED COMPLETE TO BRANCH CIRCUIT AND FIRE ALARM RELAY MODULE BY ELECTRICAL CONTRACTOR. FIRE ALARM RELAY SHALL INTERRUPT POWER TO DAMPER BRANCH CIRCUIT, TO FACILITATE DAMPER CLOSURE. LOCATE RELAY IN ELECTRICAL ROOM, SEE FIRE ALARM PLANS.
3. PROVIDE MOTOR RATED TOGGLE SWITCH AT EACH FSD, WITH NAMEPLATE IDENTIFYING BRANCH CIRCUIT AND FIRE ALARM RELAY MODULE ID.

IDENTIFICATION STAMP
DIV. OF THE STATE ARCHITECT
APP: 01-119994 INC:
REVIEWED FOR
SS ☑ FLS ☑ ACS ☑
DATE: 08/16/2022

QUATTROCCHI KWOK ARCHITECTS
Main:
636 Fifth Street, Santa Rosa, CA 95404
East Bay:
55 Harrison Street, Suite 525,
Oakland, CA 94607
(707) 576-0829

O'MAHONY & MYER
ELECTRICAL ENGINEERING & LIGHTING DESIGN
4340 REDWOOD HWY., SUITE 245
SAN RAFAEL, CALIFORNIA 94903
(415) 492-0420 FAX (415) 479-9662

REGISTERED PROFESSIONAL ENGINEER
ERIC J. COLEMAN
No. 14738
Exp. 6/23
ELECTRICAL
STATE OF CALIFORNIA

LIBERTY HIGH SCHOOL

NEW CLASSROOM BUILDING

850 2ND STREET
BRENTWOOD, CA
94513

LIBERTY UNION HIGH SCHOOL DISTRICT

DSA APP NO. 01-119994

ARCH PROJECT NO: 1719.00
DRAWN BY: Author
DRAWING SCALE: AS NOTED
PTN: 61721-83 FILE NO: 7-H4

CONSTRUCTION DOCUMENTS

JUNE 24, 2022

SHEET TITLE

FLOOR PLAN BLDG B. MECH/PLUM CONNECTIONS

SHEET NUMBER

E-B4.1

TRUE NORTH

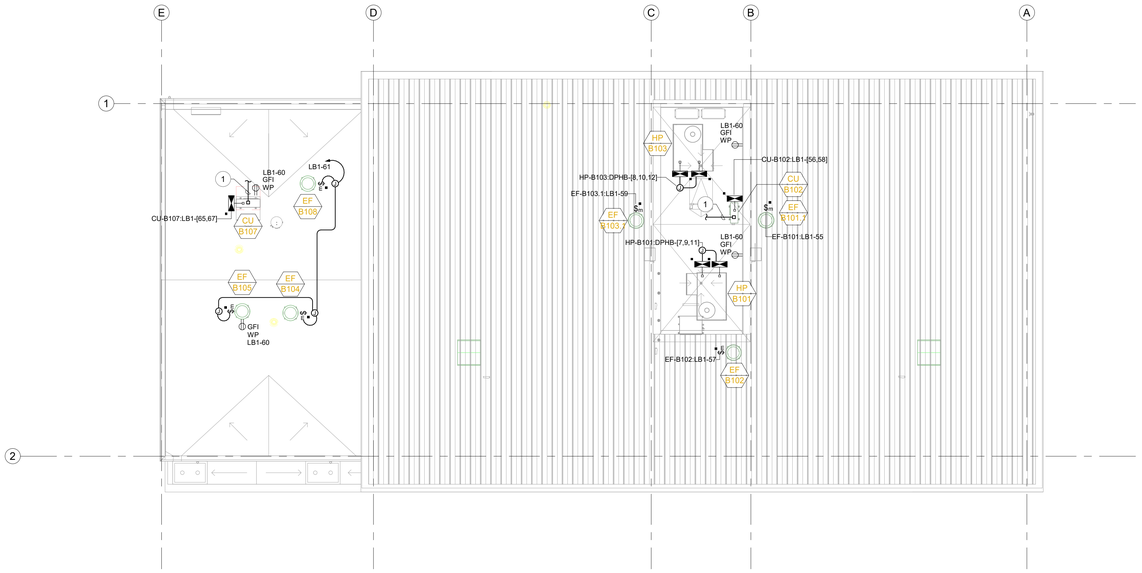

1 ROOF PLAN - BLDG B - MECH/PLUM CONNECTIONS
1/8" = 1'-0"

MECHANICAL EQUIPMENT FEEDER SCHEDULE - BLDG B - ROOF

UNIT TYPE	UNIT #	VOLTAGE	POLES	FLA	kVA	WIRE & CONDUIT	PANEL	CKT #
CU	B107	208 V	2	14 A	2.91 kVA	(2) #10 + (1) #10G. IN 1" C.	LB1	65,67
EF	B101	120 V	1	3.8 A	0.46 kVA	(2) #10 + (1) #10G. IN 3/4" C.	LB1	55
EF	B102	120 V	1	3.8 A	0.46 kVA	(2) #10 + (1) #10G. IN 3/4" C.	LB1	57
EF	B103.1	120 V	1	3.8 A	0.46 kVA	(2) #10 + (1) #10G. IN 3/4" C.	LB1	59
EF	B104	120 V	1	2.9 A	0.35 kVA	(2) #10 + (1) #10G. IN 3/4" C.	LB1	61
EF	B105	120 V	1	2.9 A	0.35 kVA	(2) #10 + (1) #10G. IN 3/4" C.	LB1	61
EF	B108	120 V	1	2.9 A	0.35 kVA	(2) #10 + (1) #10G. IN 3/4" C.	LB1	61
HP	B101	480 V	3	27.2 A	22.61 kVA	(3) #8 + (1) #10G. IN 1-1/4" C.	DPHB	7,9,11
HP	B103	480 V	3	27.2 A	22.61 kVA	(3) #8 + (1) #10G. IN 1-1/4" C.	DPHB	8,10,12
HP EX	B101	480 V	3	2.5 A	2.08 kVA	SEE HP UNIT	DPHB	7,9,11
HP EX	B103	480 V	3	2.5 A	2.08 kVA	SEE HP UNIT	DPHB	8,10,12
					54.71 kVA			

SHEET NUMBERED NOTES

1 PROVIDE AND INSTALL 3/4" RACEWAY BETWEEN RESPECTIVE INDOOR AND OUTDOOR UNIT. SEE MECHANICAL EQUIPMENT FEEDER SCHEDULE FOR BRANCH CIRCUIT WIRING.

IDENTIFICATION STAMP
DIV. OF THE STATE ARCHITECT
APP: 01-119994 INC:
REVIEWED FOR
SS ☑ FLS ☑ ACS ☑
DATE: 08/16/2022

QUATTROCCHI KWOK ARCHITECTS
Main:
636 Fifth Street, Santa Rosa, CA 95404
East Bay:
55 Harrison Street, Suite 525,
Oakland, CA 94607
(707) 576-0829

O'MAHONY & MYER
ELECTRICAL ENGINEERING & LIGHTING DESIGN
4340 REDWOOD HWY., SUITE 245
SAN RAFAEL, CALIFORNIA 94903
(415) 492-0420 FAX (415) 479-9662

REGISTERED PROFESSIONAL ENGINEER
JOHN J. COLEMAN III
No. 14738
Exp. 6/23
ELECTRICAL
STATE OF CALIFORNIA

LIBERTY HIGH SCHOOL

NEW CLASSROOM BUILDING

850 2ND STREET
BRENTWOOD, CA
94513

LIBERTY UNION
HIGH SCHOOL
DISTRICT

DSA APP NO. 01-119994
ARCH PROJECT NO: 1719.00
DRAWN BY: Author
DRAWING SCALE: AS NOTED
PTN: 61721-83 FILE NO: 7-H4
CONSTRUCTION DOCUMENTS
JUNE 24, 2022

SHEET TITLE
ROOF PLAN
BLDG. B
MECH/PLUM
CONNECTIONS

SHEET NUMBER
E-B4.2

TRUE NORTH

LIBERTY HS NEW CLASSROOM BUILDINGS - 221060 R20

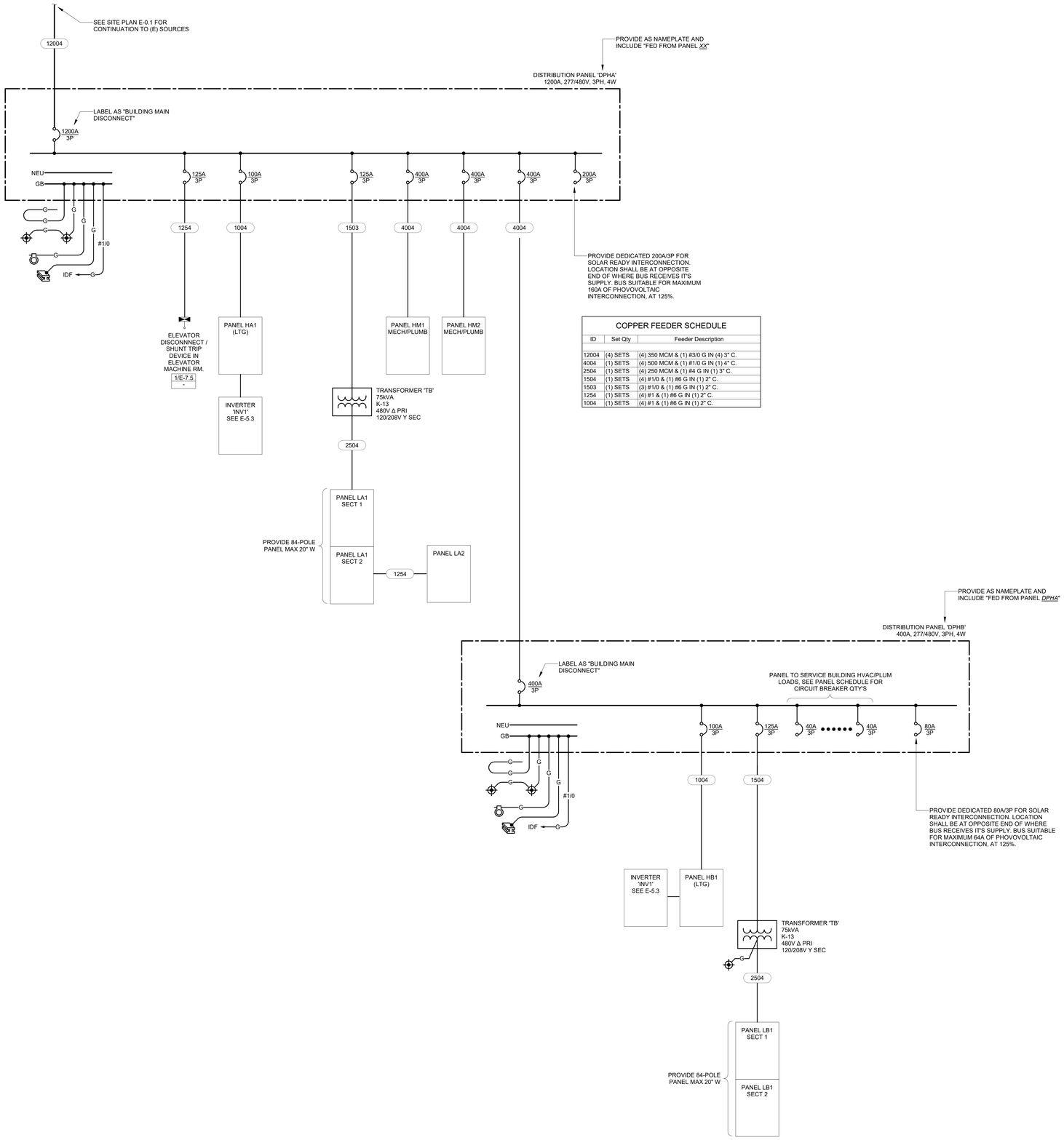

COPPER FEEDER SCHEDULE

ID	Set Qty	Feeder Description
12004	(4) SETS	(4) 350 MCM & (1) #3/0 G IN (4) 3" C.
4004	(1) SETS	(4) 500 MCM & (1) #1/0 G IN (1) 4" C.
2504	(1) SETS	(4) 250 MCM & (1) #4 G IN (1) 3" C.
1504	(1) SETS	(4) #1/0 & (1) #6 G IN (1) 2" C.
1503	(1) SETS	(3) #1/0 & (1) #6 G IN (1) 2" C.
1254	(1) SETS	(4) #1 & (1) #6 G IN (1) 2" C.
1004	(1) SETS	(4) #1 & (1) #6 G IN (1) 2" C.

1 SINGLE LINE DIAGRAM - POWER
1:1

IDENTIFICATION STAMP
DIV. OF THE STATE ARCHITECT
APP: 01-119994 INC:
REVIEWED FOR
SS ☑ FLS ☑ ACS ☑
DATE: 08/16/2022

QUATTROCCHI KWOK ARCHITECTS
Main:
636 Fifth Street, Santa Rosa, CA 95404
East Bay:
55 Harrison Street, Suite 525,
Oakland, CA 94607
(707) 576-0829

O'MAHONY & MYER
ELECTRICAL ENGINEERING & LIGHTING DESIGN
4340 REDWOOD HWY., SUITE 245
SAN RAFAEL, CALIFORNIA 94903
(415) 492-0420/FAX (415) 479-9662

REGISTERED PROFESSIONAL ENGINEER
PETER J. COLEMBRANDER
No. 14738
Exp. 6/23
ELECTRICAL
STATE OF CALIFORNIA

LIBERTY HIGH SCHOOL

NEW CLASSROOM BUILDING

850 2ND STREET
BRENTWOOD, CA
94513

LIBERTY UNION HIGH SCHOOL DISTRICT

DSA APP NO. 01-119994

ARCH PROJECT NO:	1719.00
DRAWN BY:	JK
DRAWING SCALE:	AS NOTED
PTN: 61721-83	FILE NO: 7-H4

CONSTRUCTION DOCUMENTS

JUNE 24, 2022

SHEET TITLE

SINGLE LINE DIAGRAMS

SHEET NUMBER

E-5.1

NOTE:
One, two or three zone 0-10v dimmed application with wall or ceiling mounted occupancy sensor(s) for shut off and manual dimming. Lights shall be turned on manually, U.O.N. and can be dimmed or switched manually from the device on the wall. Lights will be turned off automatically by the occupancy sensor. Time-out of sensor to be set at 20 minutes. In Corridors, stairs and restrooms, occupancy sensors shall be programmed for auto on/auto off.

Notes:
1. All room controls shall be Wattstopper or equal.
2. Not all controls shown here are required in all rooms - see floor plans for actual device quantities and locations.

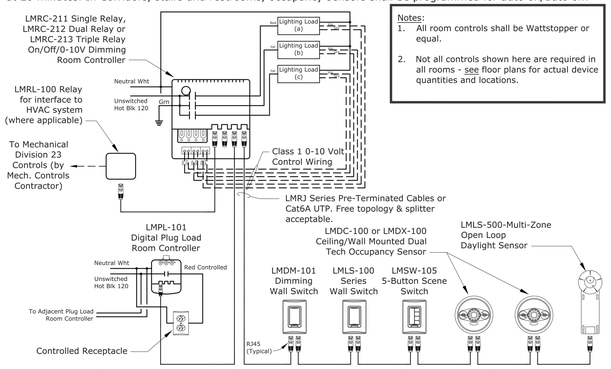

ONE, TWO OR THREE ZONE ROOM & PLUG CONTROLLER
BUILDING B

SCALE: NONE WITH ISOLATED RELAY FOR HVAC INTERFACE
FILE: L:\DETAILS\LIGHT\LTG CONTROL WATTSTOPPER DLM\LLCW011

3 / E-5.2

CORRIDORS & STAIRWAYS:

Run Cat6A UTP cable from room controller to Segment Manager. Multi-zone 0-10v dimmed application with ceiling mounted occupancy sensors for Partial Off w/ Auto Off and manual dimming. Lights will turn on automatically from the occupancy sensor upon entering the space, and can be dimmed manually from the device on the wall. Lights will dim down to a 50% light level when the space is un-occupied during the buildings "Occupied Hours". Upon entering the "After-Hours" mode, the same occupancy sensors will automatically turn the lights off when the space is unoccupied. Time-out of sensor to be set at 20 minutes.

NOTE:
One, two or three zone 0-10v dimmed application with wall or ceiling mounted occupancy sensor(s) for shut off and manual dimming. Lights shall be turned on manually, U.O.N. and can be dimmed or switched manually from the device on the wall. Lights will be turned off automatically by the occupancy sensor. Time-out of sensor to be set at 20 minutes. In Corridors, stairs and restrooms, occupancy sensors shall be programmed for auto on/auto off.

Notes:
1. Not all controls shown here are required in all rooms - see floor plans for actual device quantities and locations.

*The wireless master border router does not connect directly to wireless DLM networks. It acts as the master scheduling device for all wireless DLM networks. A master border router is only necessary for applications where more than a single LMBR-650 border router is required. Master border routers will support up to 12 LMBR-650s. If your system is larger than this, add another master border router.

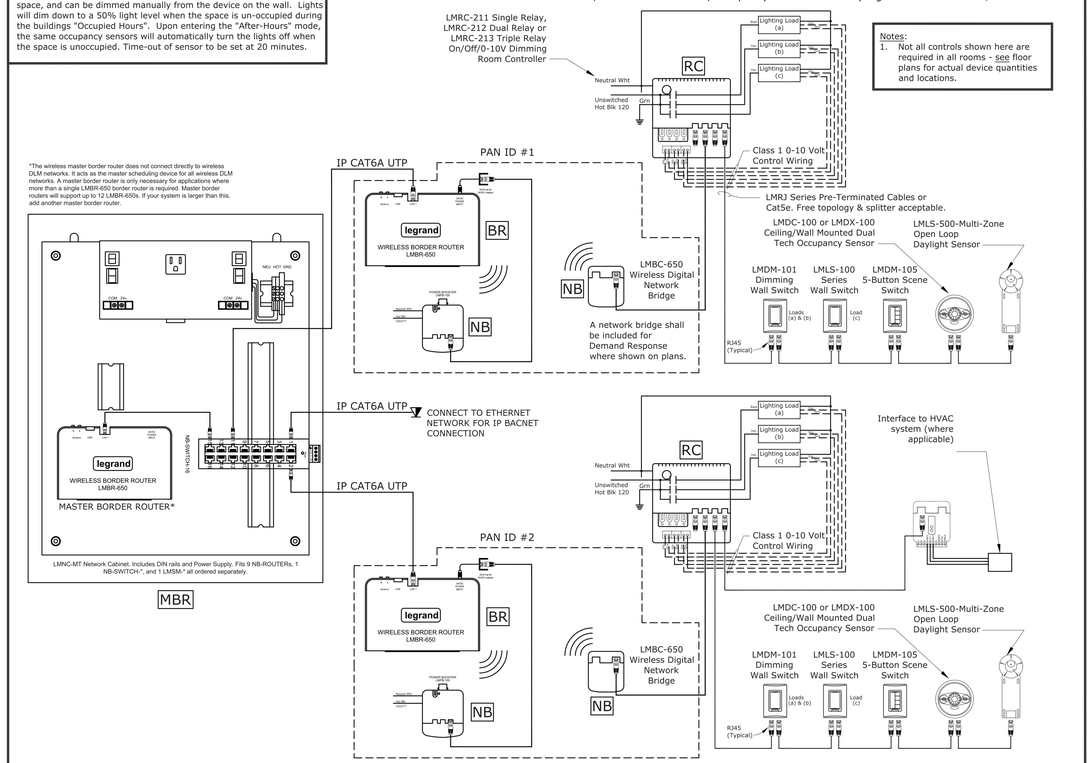

TYPICAL WIRELESS NETWORK ENCLOSURE W/ MULTIPLE WIRELESS ROUTERS
BUILDING A

SCALE: NONE
FILE: L:\DETAILS\LIGHT\LTG CONTROL WATTSTOPPER DLM\LLCW018

1 / E-5.2

WIRING LEGEND

- BRANCH CIRCUIT WIRING - PROVIDED AND INSTALLED BY CONTRACTOR. EXACT QTY., TYPE AND SIZE VARIES
- CAT6A UTP CABLING - PROVIDED AND INSTALLED BY CONTRACTOR, VERIFY WIRE TYPE WITH LIGHTING CONTROL MANUFACTURER
- 0-10V DIMMING CONTROL WIRING

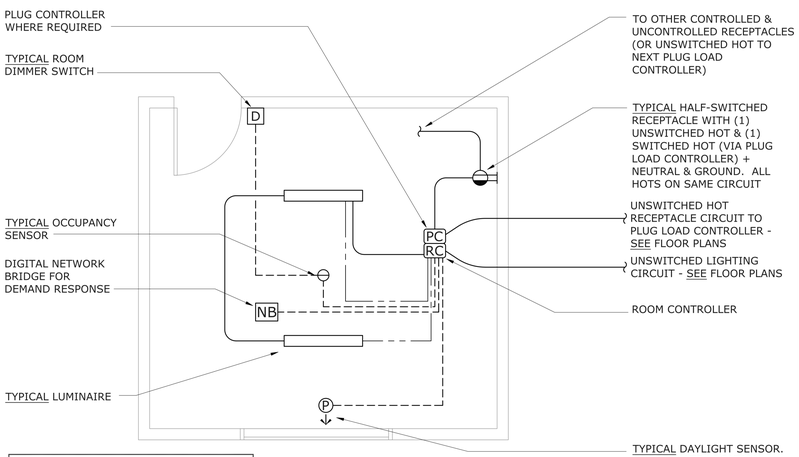

NOTE:
SEE SPECIFIC ROOM CONTROLLER WIRING DIAGRAMS FOR EACH APPLICATION.

TYPICAL ROOM CONTROL DIAGRAM WITH DEMAND RESPONSE CAPABILITY

SCALE: NONE
FILE: L:\DETAILS\LIGHT\LTG CONTROL WATTSTOPPER DLM\LLCW007A

4 / E-5.2

NORMAL AND EMERGENCY LIGHTING STATUS

NORMAL POWER LINE IN	RELAY "a" STATUS	NORMAL "a" LIGHTING	EMERGENCY LIGHTING
120/277VAC	ON	ON	ON
120/277VAC	OFF	OFF	OFF
NONE	EITHER	OFF (NO POWER)	ON

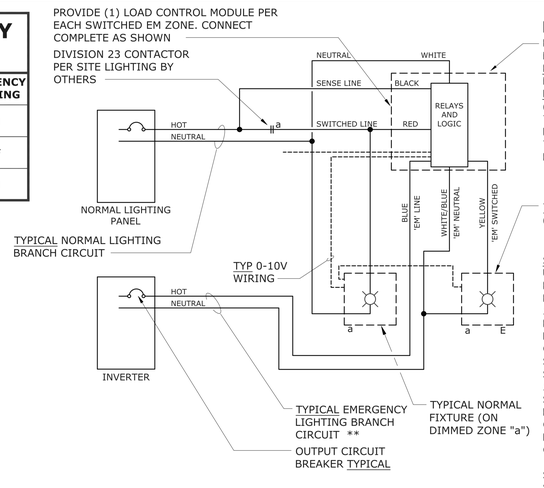

EC
EMERGENCY LIGHTING CONTROL MODULE MTD. IN 4-11/16" J-BOX. ONE REQUIRED PER EACH SWITCHED ZONE DESIGNATED 'E'. MODULES SHALL BE AS MANUFACTURED BY LVS, INC. #EPC-D-F OR EQUAL, UL924 LISTED (COMPATIBLE WITH VOLTAGE USED), LOCAL TEST SWITCH IN ROOM WITH CONTROLLED LIGHTING. MOUNT UNIT WITH INTEGRAL TEST SWITCH 7'-6" A.F.F. IN LINE WITH ROOM CONTROLS, U.O.N.

TYPICAL 'E' DESIGNATED FIXTURE (ON SWITCH LEG "a")

SEQUENCE OF OPERATIONS:
UPON LOSS OF NORMAL POWER THE EMERGENCY CONTROL MODULE SHALL ENERGIZE THE 'E' DESIGNATED CIRCUIT TO ALLOW THE EMERGENCY LIGHTING TO BE ENERGIZED AT FULL LIGHT OUTPUT. THIS DIAGRAM ONLY INDICATES LIGHT FIXTURES CONTROLLED VIA A RELAY CONTROL SYSTEM. FOR ROOMS WITH LINE VOLTAGE SWITCHES AND/OR OCCUPANCY SENSORS, A HOT WIRE CONNECTING FROM THE LINE SIDE OF THE CONTROL DEVICE IS REQUIRED TO BE INSTALLED TO THE CONTROL MODULE SIMILAR TO THIS DIAGRAM. COMPLETE INSTALLATION SHALL COMPLY WITH NEC 700.

SCHEMATIC SHOWN IN DE-ENERGIZED STATE.

** ALL EMERGENCY SOURCE CIRCUITS SHALL BE INSTALLED IN SEPARATE RACEWAYS (FROM NORMAL POWER), PER 2014 NEC 700.10(B), OR APPLICABLE CODE AT THE TIME OF PERMITTING.

EMERGENCY LIGHTING CONTROL MODULE WIRING DIAGRAM FOR DIMMED EMERGENCY FIXTURES

SCALE: NONE
FILE: L:\DETAILS\LIGHT\LTG CONTROL\LLC003-HORIZ

2 / E-5.2

IDENTIFICATION STAMP
DIV. OF THE STATE ARCHITECT
APP: 01-119994 INC:
REVIEWED FOR
SS ☑ FLS ☑ ACS ☑
DATE: 08/16/2022

QUATTROCCHI KWOK ARCHITECTS
Main:
636 Fifth Street, Santa Rosa, CA 95404
East Bay:
55 Harrison Street, Suite 525,
Oakland, CA 94607
(707) 576-0829

O'MAHONY & MYER
ELECTRICAL ENGINEERING & LIGHTING DESIGN
4340 REDWOOD HWY., SUITE 245
SAN RAFAEL, CALIFORNIA 94903
(415) 492-0420/FAX (415) 479-9662

REGISTERED PROFESSIONAL ENGINEER
JAMES F. COLDEBRANDER
No. 18738
Exp. 6/23
ELECTRICAL
STATE OF CALIFORNIA

LIBERTY HIGH SCHOOL

NEW CLASSROOM BUILDING

850 2ND STREET
BRENTWOOD, CA
94513

LIBERTY UNION HIGH SCHOOL DISTRICT

DSA APP NO. 01-119994
ARCH PROJECT NO: 1719.00
DRAWN BY: Author
DRAWING SCALE: AS NOTED
PTN: 61721-83 FILE NO: 7-H4
CONSTRUCTION DOCUMENTS
JUNE 24, 2022
SHEET TITLE
3 21/32"

SINGLE LINE DIAGRAMS

SHEET NUMBER
E-5.2

INVERTER LOAD SUMMARY

277 V EMERGENCY LIGHTING				POWER FACTOR =0.833
BUILDING	ROOM	ROOM NAME	TOTAL WATTS	TOTAL KVA
1ST FLOOR				
A	101	CLASSROOM	80	96
A	102	CLASSROOM	80	96
A	106	CLASSROOM	80	96
A	108	ELEC/IDF	40	48
A	110	CLASSROOM	80	96
A		EXTERIOR BUILDING MOUNTED	130	156
A		EXIT SIGNS	18	22
2ND FLOOR				
A		EXTERIOR BUILDING MOUNTED	326	391
		TOTAL BUILDING A		1001
1ST FLOOR				
B	104	GIRLS RESTROOM	57	68
B	105	BOYS RESTROOM	57	68
B	107	ELECTRIC	40	48
		TOTAL BUILDING B		185

INVERTER INVA SPECIFICATIONS

1. ALL EMERGENCY SOURCE CIRCUITS SHALL BE INSTALLED IN SEPARATE RACEWAYS (FROM NORMAL POWER), PER 2014 NEC 700.10(B), OR APPLICABLE CODE AT THE TIME OF PERMITTING.
2. REFER ALSO TO SPECIFICATIONS SECTION 265101. UNITS SHALL BE MYERS POWER PRODUCTS ILLUMINATOR SERIES EM OR APPROVED EQUAL:
   INVA: 6-EM-2-S-BD2004-M-2YW-Y-F-IOT
3. UNITS SHALL BE 277V 1PH 2W INPUT, 277V OUTPUT WITH 20AMP OUTPUT CIRCUIT BREAKER, RATED AS FOLLOWS:
   INVA: 1.6KVA
4. INPUT SHALL BE EQUIPPED WITH ANSI 62.41 SURGE PROTECTION AND 1HZ NOMINAL SYNCHRONIZING SLEW RATE.
5. OUTPUT VOLTAGE STATIC REGULATION SHALL BE +/- 5% FOR 100% RESISTIVE LOAD.
6. OUTPUT DISTORTION SHALL BE 5% THD MAXIMUM.
7. OVERLOAD RATING: 150% MOMENTARY; 120% FOR 5 MINUTES.
8. TRANSFER TIME: NO BREAK
9. BATTERY SHALL BE SEALED LEAD CALCIUM, 10 YEAR LIFE, 90 MINUTE RUN TIME, WITH AUTO-DISCONNECT FOR LOW BATTERY VOLTAGE.
10. INVERTER SHALL BE FLOOR MOUNTED.
11. INVERTER SHALL BE PWM TYPE.
12. PROVIDE MAINTENANCE BYPASS.
13. PROVIDE IN NEMA 1 ENCLOSURE, FRONT ACCESS ONLY.
14. PROVIDE FACTORY STARTUP AND TEST OF UNIT TO THE SATISFACTION OF BUILDING INSPECTION AUTHORITIES AND WITH MAXIMUM 4 HOURS OF PERSONNEL TRAINING FOLLOWING STARTUP.
15. AUTO SELF TESTING.
16. PROVIDE OUTPUT CIRCUIT BREAKERS RATED 20AMPS EACH WITH DEDICATED CIRCUITS FOR EACH OF THE EMERGENCY LIGHTING LOADS:
    INVA: 4 OUTPUT BREAKERS
17. SEISMIC QUALIFIED.
18. SUBMIT FOR REVIEW AND APPROVAL.

INVERTER INVB SPECIFICATIONS

1. ALL EMERGENCY SOURCE CIRCUITS SHALL BE INSTALLED IN SEPARATE RACEWAYS (FROM NORMAL POWER), PER 2014 NEC 700.10(B), OR APPLICABLE CODE AT THE TIME OF PERMITTING.
2. REFER ALSO TO SPECIFICATIONS SECTION 265101. UNITS SHALL BE MYERS POWER PRODUCTS ILLUMINATOR SERIES LV OR APPROVED EQUAL:
   INVB: LV-3-R-1-B2003-S-LVST
3. UNITS SHALL BE 277V 1PH 2W INPUT, 277V OUTPUT WITH 20AMP OUTPUT CIRCUIT BREAKER, RATED AS FOLLOWS:
   INVB: 550VA
4. INPUT SHALL BE EQUIPPED WITH ANSI 62.41 SURGE PROTECTION AND 1HZ NOMINAL SYNCHRONIZING SLEW RATE.
5. OUTPUT VOLTAGE STATIC REGULATION SHALL BE +/- 5% FOR 100% RESISTIVE LOAD.
6. OUTPUT DISTORTION SHALL BE 5% THD MAXIMUM.
7. OVERLOAD RATING: 150% MOMENTARY; 120% FOR 5 MINUTES.
8. TRANSFER TIME: 6 MILLISECOND
9. BATTERY SHALL BE SEALED LEAD CALCIUM, 10 YEAR LIFE, 90 MINUTE RUN TIME, WITH AUTO-DISCONNECT FOR LOW BATTERY VOLTAGE.
10. PROVIDE RS232 PORT FOR EXTERNAL COMMUNICATIONS.
11. INVERTER SHALL BE PWM TYPE.
12. INVERTER SHALL BE WALL MOUNTED.
13. PROVIDE IN NEMA 1 ENCLOSURE, FRONT ACCESS ONLY.
14. PROVIDE FACTORY STARTUP AND TEST OF UNIT TO THE SATISFACTION OF BUILDING INSPECTION AUTHORITIES AND WITH MAXIMUM 4 HOURS OF PERSONNEL TRAINING FOLLOWING STARTUP.
15. AUTO SELF TESTING.
16. PROVIDE OUTPUT CIRCUIT BREAKERS RATED 20AMPS EACH WITH DEDICATED CIRCUITS FOR EACH OF THE EMERGENCY LIGHTING LOADS:
    INVB: 3 OUTPUT BREAKER
17. SUBMIT FOR REVIEW AND APPROVAL.

SEQUENCE OF OPERATION:

UPON THE LOSS OF NORMAL POWER, THE LVS EMERGENCY CONTROL MODULE WILL BYPASS THE ROOM CONTROLLER AND FORCE THE EMERGENCY FIXTURES **ON**. THE ROOM CONTROLLER WILL FORCE THE DIMMED EMERGENCY FIXTURE TO 100%. THE LVS IS UL924 LISTED.

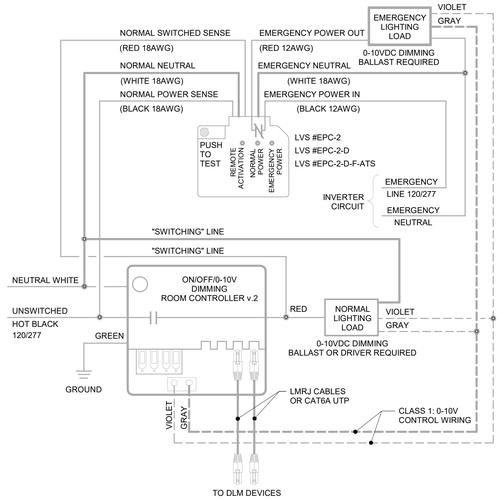

1 EMERGENCY LIGHING CONTROL MODULE WIRING DIAGRAM FOR DIMMED EMERGENCY FIXTURES CONTROLLED BY 0-10V DIMMING ROOM CONTROLLER
NONE

LIGHTING CONTROLS SEQUENCE OF OPERATION

ROOM TYPE	OCCUPANCY SENSOR					PHOTOCELL		TIME CLOCK		SYSTEM		REMARKS
	AUTO ON	MANUAL ON	AUTO OFF	PARTIAL OFF AT NORMAL HOURS	AUTO OFF AFTER HOURS	AUTO DIM @ TARGET FC	SET LEVEL FC	ASTRONOMICAL TIME CLOCK	MANUAL OVERRIDE DELAY	PLUG LOAD	DEMAND RESPONSE (NOTE 6)	
GENERAL CLASSROOM		X	20 MIN			X	60 AT WORK PLANE				X	
SCIENCE CLASSROOM		X	20 MIN			X	75 AT WORK PLANE					DEMAND RESPONSE REQUIRED IN BUILDING A ONLY (NOTE 6)
PREP ROOM		X	20 MIN			X	75 AT WORK PLANE					DEMAND RESPONSE REQUIRED IN BUILDING A ONLY (NOTE 6)
STAFF BREAK ROOM		X	20 MIN								X	
OFFICE		X	20 MIN							X	X	PLUG LOAD CONTROLLED BY OCCUPANCY SENSOR
RESTROOM	X		20 MIN									
JANITORIAL, STORAGE, MECHANICAL		X	20 MIN									
EXTERIOR LIGHTS, ZONE S1								X	2 HR			ON DUSK TO DAWN
EXTERIOR LIGHTS, ZONE S2								X	2 HR			ON DUSK TO LATE EVENING. OBTAIN SCHEDULE FROM OWNER.

NOTES:
1. DAYLIGHT CONTROLS SHALL NOT DIM THE ROOM LIGHTS SO LOW THE LIGHTS APPEAR OFF.
2. THIS SCHEDULE IS NOT INTENDED TO DEFINE WHICH CONTROLS ARE TO BE INSTALLED IN EACH SPACE TYPE.
3. FOR ACTUAL CONTROL DEVICES TO BE INSTALLED IN EACH SPACE, REFER TO PLANS.
4. ALL SETPOINTS AND TIME SCHEDULES TO BE VERIFIED WITH OWNER PRIOR TO PROGRAMMING.
5. FOOTCANDLE LEVELS BASED ON THE IESNA LIGHTING STANDARDS. LIGHTING LEVELS SUBJECT TO CHANGE PER ENERGY CODE COMPLIANCE AND OWNER REQUEST AND ARE MEANT TO BE USED AS A BASELINE DEFAULT FOR PROGRAMMING.
6. DEMAND RESPONSE CONTROLS ARE ONLY REQUIRED IF THE DESIGN AREA OF BUILDING EXCEEDS 10,000SQFT. IF DEMAND RESPONSE REQUIRED, TOTAL AREA LIGHTING POWER MUST BE REDUCED BY AT LEAST 15%.

NOTE:
DIV.23 TO PROVIDE TIMECLOCK BYPASS SWITCHES

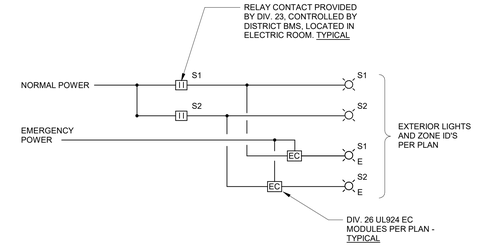

2 EXTERIOR LIGHTING CONTROL DETAIL-BUILDING A
NONE

NOTE:
DIV.23 TO PROVIDE TIMECLOCK BYPASS SWITCHES

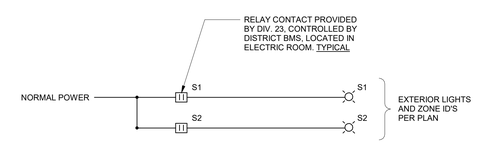

3 EXTERIOR LIGHTING CONTROL DETAIL-BUILDING B
NONE

IDENTIFICATION STAMP
DIV. OF THE STATE ARCHITECT
APP: 01-119994 INC:
REVIEWED FOR
SS ☑ FLS ☑ ACS ☑
DATE: 08/16/2022

QUATTROCCHI KWOK ARCHITECTS
Main:
636 Fifth Street, Santa Rosa, CA 95404
East Bay:
55 Harrison Street, Suite 525,
Oakland, CA 94607
(707) 576-0829

O'MAHONY & MYER
ELECTRICAL ENGINEERING & LIGHTING DESIGN
4340 REDWOOD HWY., SUITE 245
SAN RAFAEL, CALIFORNIA 94903
(415) 492-0420 FAX (415) 479-9662

REGISTERED PROFESSIONAL ENGINEER
JOHN J. COLENBRANDER
No. 14738
Exp. 6/23
ELECTRICAL
STATE OF CALIFORNIA

LIBERTY HIGH SCHOOL

NEW CLASSROOM BUILDING

850 2ND STREET
BRENTWOOD, CA
94513

LIBERTY UNION HIGH SCHOOL DISTRICT

DSA APP NO. 01-119994
ARCH PROJECT NO: 1719.00
DRAWN BY: Author
DRAWING SCALE: AS NOTED
PTN: 61721-83 FILE NO: 7-H4
CONSTRUCTION DOCUMENTS
JUNE 24, 2022

SHEET TITLE
SINGLE LINE DIAGRAMS

SHEET NUMBER
E-5.3

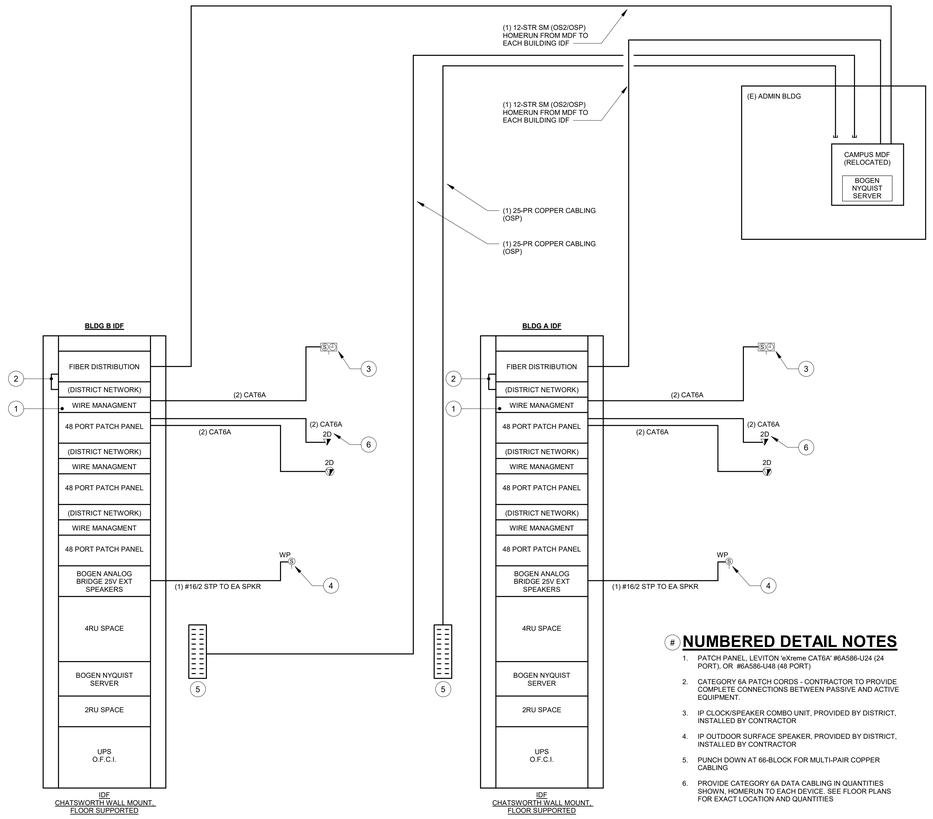

NUMBERED DETAIL NOTES

1. PATCH PANEL, LEVITON 'eXtreme CAT6A' #6A586-U24 (24 PORT), OR #6A586-U48 (48 PORT)
2. CATEGORY 6A PATCH CORDS - CONTRACTOR TO PROVIDE COMPLETE CONNECTIONS BETWEEN PASSIVE AND ACTIVE EQUIPMENT.
3. IP CLOCK/SPEAKER COMBO UNIT, PROVIDED BY DISTRICT, INSTALLED BY CONTRACTOR
4. IP OUTDOOR SURFACE SPEAKER, PROVIDED BY DISTRICT, INSTALLED BY CONTRACTOR
5. PUNCH DOWN AT 66-BLOCK FOR MULTI-PAIR COPPER CABLING
6. PROVIDE CATEGORY 6A DATA CABLING IN QUANTITIES SHOWN, HOMERUN TO EACH DEVICE. SEE FLOOR PLANS FOR EXACT LOCATION AND QUANTITIES

2 SINGLE LINE DIAGRAM - DATA ELEVATION
1:1

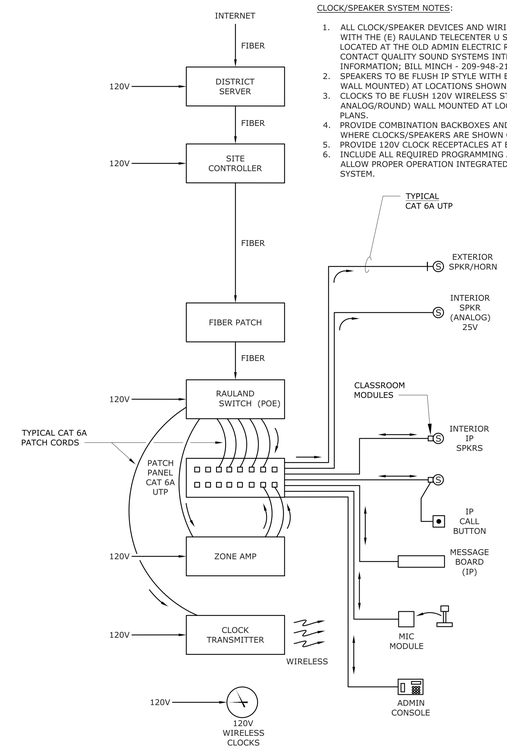

CLOCK/SPEAKER SYSTEM NOTES:

1. ALL CLOCK/SPEAKER DEVICES AND WIRING TO BE COMPATIBLE WITH THE (E) RAULAND TELECENTER U SYSTEM HEAD-END LOCATED AT THE OLD ADMIN ELECTRIC ROOM ROOM AW110. CONTACT QUALITY SOUND SYSTEMS INTEGRATION FOR INFORMATION; BILL MINCH - 209-948-2104 x1024.
2. SPEAKERS TO BE FLUSH IP STYLE WITH BAFFLE (CEILING AND WALL MOUNTED) AT LOCATIONS SHOWN ON PLANS.
3. CLOCKS TO BE FLUSH 120V WIRELESS STYLE (13" ANALOG/ROUND) WALL MOUNTED AT LOCATIONS SHOWN ON PLANS.
4. PROVIDE COMBINATION BACKBOXES AND BAFFLES AT LOCATIONS WHERE CLOCKS/SPEAKERS ARE SHOWN CO-LOCATED.
5. PROVIDE 120V CLOCK RECEPTACLES AT EACH CLOCK.
6. INCLUDE ALL REQUIRED PROGRAMMING AND COMMISSIONING TO ALLOW PROPER OPERATION INTEGRATED WITH THE EXISTING SYSTEM.

1 SINGLE LINE DIAGRAM - CLOCK / SPEAKER CONNECTIONS
1:1

IDENTIFICATION STAMP
DIV. OF THE STATE ARCHITECT
APP: 01-119994 INC:
REVIEWED FOR
SS ☑ FLS ☑ ACS ☑
DATE: 08/16/2022

QUATTROCCHI KWOK ARCHITECTS
Main:
636 Fifth Street, Santa Rosa, CA 95404
East Bay:
55 Harrison Street, Suite 525,
Oakland, CA 94607
(707) 576-0829

O'MAHONY & MYER
ELECTRICAL ENGINEERING & LIGHTING DESIGN
4340 REDWOOD HWY., SUITE 245
SAN RAFAEL, CALIFORNIA 94903
(415) 492-0420/FAX (415) 479-9662
REGISTERED PROFESSIONAL ENGINEER
JOHN J. COLENBRANDER
No. 14738
Exp. 6/23
ELECTRICAL
STATE OF CALIFORNIA

LIBERTY HIGH SCHOOL

NEW CLASSROOM BUILDING

850 2ND STREET
BRENTWOOD, CA
94513

LIBERTY UNION HIGH SCHOOL DISTRICT

DSA APP NO. 01-119994
ARCH PROJECT NO: 1719.00
DRAWN BY: Author
DRAWING SCALE: AS NOTED
PTN: 61721-83 FILE NO: 7-H4
CONSTRUCTION DOCUMENTS
JUNE 24, 2022

SHEET TITLE
SINGLE LINE DIAGRAMS

SHEET NUMBER
E-5.4

R20

LIBERTY HS NEW CLASSROOM BUILDINGS - 221060

HM1

Location: STAFF BREAK RM A208 **Supply From:** DPHA **Mounting:** FLUSH **Enclosure:** NEMA 1 **Notes:**

Volts: 480/277V 3PH, 4W **Phases:** 3 **Wires:** 4

A.I.C. Rating: 65k **Mains Type:** MCB **Mains Rating:** 400 A **MCB Rating:** 400 A

CKT	Circuit Description	Type	Trip	Poles	A	B	C	A	B	C	Poles	Trip	Type	Circuit Description	CKT
1					7.34			7.34							2
3	HVAC - HP A101 / POWER EX	H	40 A	3		7.34			7.34		3	40 A	H	HVAC - HP A102 / POWER EX	4
5							7.34			7.34					6
7					7.34			7.34							8
9	HVAC - HP A103 / POWER EX	H	40 A	3		7.34			7.34		3	40 A	H	HVAC - HP A104 / POWER EX	10
11							7.34			7.34					12
13					7.34			7.34							14
15	HVAC - HP A105 / POWER EX	H	40 A	3		7.34			7.34		3	40 A	H	HVAC - HP A106 / POWER EX	16
17							7.34			7.34					18
19					7.34			7.34							20
21	HVAC - HP A109 / POWER EX	H	40 A	3		7.34			7.34		3	40 A	H	HVAC - HP A110 / POWER EX	22
23							7.34			7.34					24
25	SPARE	--	20 A	1	0.00			0.00			1	20 A	--	SPARE	26
27	SPARE	--	20 A	1		0.00			0.00		1	20 A	--	SPARE	28
29	SPARE	--	20 A	1			0.00			0.00	1	20 A	--	SPARE	30
31	S P A C E	--	--	--	0.00			0.00			--	--	--	S P A C E	32
33	S P A C E	--	--	--		0.00			0.00		--	--	--	S P A C E	34
35	S P A C E	--	--	--			0.00			0.00	--	--	--	S P A C E	36
37	S P A C E	--	--	--	0.00			0.00			--	--	--	S P A C E	38
39	S P A C E	--	--	--		0.00			0.00		--	--	--	S P A C E	40
41	S P A C E	--	--	--			0.00			0.00	--	--	--	S P A C E	42

DEMAND LOAD SUMMARY	CONNECTED...	DEMAND FACTOR	DEMAND KVA
TYPE "M": NON-CONTINUOUS / MIS...			
TYPE "L": LIGHTING / CONTINUOUS...			
TYPE "R": RECEPTACLES			
TYPE "H" HVAC / MECHANICAL...	176.25	100.00%	176.25
TOTALS:	176.25		176.25

PANEL TOTALS	kVA	AMPS	AMPS AT 125%
PHASE A:	58.75	212.098 A	265.123 A
PHASE B:	58.75	212.098 A	265.123 A
PHASE C:	58.75	212.098 A	265.123 A

HM2

Location: STAFF BREAK RM A208 **Supply From:** DPHA **Mounting:** FLUSH **Enclosure:** NEMA 1 **Notes:**

Volts: 480/277V 3PH, 4W **Phases:** 3 **Wires:** 4

A.I.C. Rating: 65k **Mains Type:** MCB **Mains Rating:** 400 A **MCB Rating:** 400 A

CKT	Circuit Description	Type	Trip	Poles	A	B	C	A	B	C	Poles	Trip	Type	Circuit Description	CKT
1					6.65			6.65							2
3	HVAC - HP-A201	H	30 A	3		6.65			6.65		3	30 A	H	HVAC - HP A202	4
5							6.65			6.65					6
7					6.65			6.65							8
9	HVAC - HP A203	H	30 A	3		6.65			6.65		3	30 A	H	HVAC - HP A204	10
11							6.65			6.65					12
13					6.65			6.65							14
15	HVAC - HP A205	H	30 A	3		6.65			6.65		3	30 A	H	HVAC - HP A206	16
17							6.65			6.65					18
19					5.10			6.65							20
21	HVAC - HP A208	H	25 A	3		5.10			6.65		3	30 A	H	HVAC - HP-A209	22
23							5.10			6.65					24
25					6.65			0.00							26
27	HVAC - HP A210	H	30 A	3		6.65			0.00		3	30 A	--	SPARE	28
29							6.65			0.00					30
31	S P A C E	--	--	--	0.00										32
33	S P A C E	--	--	--		0.00			0.00		--	--	--	S P A C E	34
35	S P A C E	--	--	--			0.00			0.00	--	--	--	S P A C E	36
37	S P A C E	--	--	--	0.00			0.00			--	--	--	S P A C E	38
39	S P A C E	--	--	--		0.00			0.00		--	--	--	S P A C E	40
41	S P A C E	--	--	--			0.00			0.00	--	--	--	S P A C E	42

DEMAND LOAD SUMMARY	CONNECTED...	DEMAND FACTOR	DEMAND KVA
TYPE "M": NON-CONTINUOUS / MIS...			
TYPE "L": LIGHTING / CONTINUOUS...			
TYPE "R": RECEPTACLES			
TYPE "H" HVAC / MECHANICAL...	174.92	100.00%	174.92
TOTALS:	174.92		174.92

PANEL TOTALS	kVA	AMPS	AMPS AT 125%
PHASE A:	58.31	210.497 A	263.122 A
PHASE B:	58.31	210.497 A	263.122 A
PHASE C:	58.31	210.497 A	263.122 A

DPHB

Location: ELECTRICAL B107 **Supply From:** DPHA **Mounting:** **Enclosure:** **Notes:**

Volts: 480/277V 3PH, 4W **Phases:** 3 **Wires:** 4

A.I.C. Rating: 65kAIC **Mains Type:** MCB **Mains Rating:** 400 A **MCB Rating:** 400 A

CKT	Circuit Description	Type	Trip	Poles	A	B	C	A	B	C	Poles	Trip	Type	Circuit Description	CKT
1					15.98			0.00			1	20 A	--	SPARE	2
3	TB	R; L; H; M	20 A	3		14.62									4
5							14.21			0.00	1	20 A	--	SPARE	6
7					8.23			8.23							8
9	HVAC - HP B101 / POWER EX	H	40 A	3		8.23			8.23		3	40 A	H	HVAC - HP B103 / POWER EX	10
11							8.23			8.23					12
13					1.99			1.50			2	20 A	H	H CUSTODIAN B108	14
15	HB1	L	100 A	3		2.72			1.50						16
17							0.54			0.00	1	20 A	--	SPARE	18
19	SPARE	--	20 A	1	0.00			4.21			1	20 A	H	EWH - B101 SCI	20
21	EWH - B102B PREP	H	20 A	1		4.21			0.00		1	20 A	--	SPARE	22
23	EWH - B103 SCI	H	20 A	1			4.21			4.21	1	20 A	H	EWH - B102A PREP	24
25	SPARE	--	20 A	1	0.00			0.00			1	20 A	--	SPARE	26
27	SPARE	--	20 A	1		0.00			0.00		1	20 A	--	SPARE	28
29	SPARE	--	20 A	1			0.00			0.00	1	20 A	--	SPARE	30
31	SPARE	--	20 A	1	0.00			0.00			1	20 A	--	SPARE	32
33	SPARE	--	20 A	1		0.00			0.00		1	20 A	--	SPARE	34
35	SPARE	--	20 A	1			0.00			0.00	1	20 A	--	SPARE	36
37					0.00			0.00			1	20 A	--	SPARE	38
39	FUTURE PV	--	80 A	3		0.00			0.00		1	20 A	--	SPARE	40
41							0.00			0.00	1	20 A	--	SPARE	42

DEMAND LOAD SUMMARY	CONNECTED...	DEMAND FACTOR	DEMAND KVA
TYPE "M": NON-CONTINUOUS / MIS...	1.60	100.00%	1.60
TYPE "L": LIGHTING / CONTINUOUS...	5.35	125.00%	6.69
TYPE "R": RECEPTACLES	31.28	65.98%	20.64
TYPE "H" HVAC / MECHANICAL...	81.06	100.00%	81.06
TOTALS:	119.29		109.99

PANEL TOTALS	kVA	AMPS	AMPS AT 125%
PHASE A:	40.15	145.013 A	181.266 A
PHASE B:	39.51	142.623 A	178.278 A
PHASE C:	39.63	143.151 A	178.938 A

LB1

Location: ELECTRICAL B107 **Supply From:** TB **Mounting:** **Enclosure:** **Notes:**

*PROVIDE RED, 'LOCK-ON', CIRCUIT BREAKER

Volts: 120/208V 3PH, 4W **Phases:** 3 **Wires:** 4

A.I.C. Rating: 65kAIC **Mains Type:** MCB **Mains Rating:** 225 A **MCB Rating:** 225 A

CKT	Circuit Description	Type	Trip	Poles	A	B	C	A	B	C	Poles	Trip	Type	Circuit Description	CKT
1	REC - SCIENCE B103 CNTR	R	20 A	1	0.70			0.70			1	20 A	R	REC - SCIENCE B101 CNTR	2
3	REC - SCIENCE B103 CNTR	R	20 A	1		0.70			0.70		1	20 A	R	REC - SCIENCE B101 CNTR	4
5	REC - SCIENCE B103 CNTR	R	20 A	1			0.70			0.70	1	20 A	R	REC - SCIENCE B101 CNTR	6
7	REC - SCIENCE B103 CNTR	R	20 A	1	0.70			0.70			1	20 A	R	REC - SCIENCE B101 CNTR	8
9	REC - SCIENCE B103 CNTR	R	20 A	1		0.70			0.70		1	20 A	R	REC - SCIENCE B101 CNTR	10
11	REC - SCIENCE B103 CNTR	R	20 A	1			0.70			0.70	1	20 A	R	REC - SCIENCE B101 CNTR	12
13	REC - SCIENCE B103 CNTR	R	20 A	1	0.70			0.70			1	20 A	R	REC - SCIENCE B101 CNTR	14
15	REC - SCIENCE B103 CNTR	R	20 A	1		0.70			0.70		1	20 A	R	REC - SCIENCE B101 CNTR	16
17	REC - SCIENCE B103 CNTR	R	20 A	1			0.70			0.70	1	20 A	R	REC - SCIENCE B101 CNTR	18
19	REC - SCIENCE B103 CNTR	R	20 A	1	0.70			0.70			1	20 A	R	REC - SCIENCE B101 CNTR	20
21	REC - SCIENCE B103 CNTR	R	20 A	1		0.70			0.70		1	20 A	R	REC - SCIENCE B101 CNTR	22
23	REC - PREP, SCI GENERAL USE	R	20 A	1			0.54			0.36	1	20 A	R	REC - SCIENCE B101	24
25	REC - SCIENCE B103	R	20 A	1	0.36			0.36			1	20 A	R	REC - SCIENCE B101	26
27	REC - SCIENCE B103	R	20 A	1		0.36			0.36		1	20 A	R	REC - SCIENCE B101	28
29	REC - SCIENCE B103	R	20 A	1			0.36			0.18	1	20 A	R	REC - SCIENCE B101	30
31	REC - SCIENCE B103	R	20 A	1	0.18			0.36			1	20 A	R	REC - SCIENCE B101	32
33	REC - SCIENCE B103	R	20 A	1		0.36			0.90		1	20 A	R	REC - SCIENCE B101 CONV.	34
35	REC - TEACH PODIUM SCI B103	R	20 A	1			0.70			0.70	1	20 A	R	REC - TEACH PODIUM B101	36
37	REC - SCIENCE B103 CONV.	R	20 A	1	0.90			0.36			1	20 A	R	REC - PREP B102 CNTR	38
39	LIGHTING CONTROLS	L	20 A	1		0.10			0.36		1	20 A	R	REC - PREP B102 CNTR	40
41	SPARE	--	20 A	1			0.00			0.36	1	20 A	R	REC - RESTROOMS	42
43	SPARE	--	20 A	1	0.00			1.08			1	20 A	R	REC - EXTERIOR / FIRE RISER	44
45	SPARE	--	20 A	1		0.00			0.36		1	20 A	R	REC - CUSTODIAN	46
47	SPARE	--	20 A	1			0.00			0.00	1	20 A	--	SPARE	48
49	FUME HOOD LT AND REC -...	M	20 A	1	0.20			0.00			1	20 A	--	SPARE	50
51	FUME HOOD LT AND REC -...	M	20 A	1		0.20			0.00		1	20 A	--	SPARE	52
53	FUME HOOD LT AND REC -...	M	20 A	1			0.20			0.02	1	20 A	H	CONDENSATE PUMP FC B107	54
55	FUME HOOD - EF B101	H	15 A	1	0.46			0.92			2	20 A	H	HVAC - CU/FC B102	56
57	FUME HOOD - EF B102	H	15 A	1		0.46			0.92						58
59	FUME HOOD - EF B103	H	15 A	1			0.46			0.72	1	20 A	R	ROOF RECEPTACLES	60
61	HVAC - EFs B104/105/106	H	15 A	1	1.04			1.39			1	20 A	H	HVAC - PURGE FAN EF 103.2	62
63	HVAC - PURGE FAN EF 101.2	H	20 A	1		1.39									64
65	HVAC - CU/FC B107	H	30 A	2			1.46			0.60	1	20 A	H	FSDs - SCI B103	66
67					1.46			0.60			1	20 A	H	FSDs - SCI B101	68
69	EWH CIRC PUMP - CUST B106	H	20 A	1		0.36			0.16		2	15 A	H	STRIP HEATER - FIRE RISER B108	70
71	IDF RECEPTACLE - L5-30R	R	30 A	1			2.20			0.16					72
73	REC - IDF BACKBOARD	R	20 A	1	0.36			0.36			1	20 A	R	REC - IDF BACKBOARD	74
75	IDF RECEPTACLE - L5-30R	R	30 A	1		2.20			0.54		1	20 A	R	REC - ELEC RM B107	76
77	SPARE	--	20 A	1			0.00			0.50	1	20 A	M	SECURITY PANEL	78
79	SPARE	--	20 A	1	0.00			0.00			1	20 A	--	SPARE	80
81	SPARE	--	20 A	1		0.00			0.00		1	20 A	--	SPARE	82
83	FIRE ALARM PANELS*	M	20 A	1			0.50			0.00	1	20 A	--	SPARE	84

DEMAND LOAD SUMMARY	CONNECTED...	DEMAND FACTOR	DEMAND KVA
TYPE "M": NON-CONTINUOUS / MIS...	1.60	100.00%	1.60
TYPE "L": LIGHTING / CONTINUOUS...	0.10	125.00%	0.13
TYPE "R": RECEPTACLES	31.28	65.98%	20.64
TYPE "H" HVAC / MECHANICAL...	11.83	100.00%	11.83
TOTALS:	44.81		34.20

PANEL TOTALS	kVA	AMPS	AMPS AT 125%
PHASE A:	15.98	133.715 A	167.144 A
PHASE B:	14.62	122.349 A	152.936 A
PHASE C:	14.21	118.433 A	148.042 A

HA1

Location: ELEC/IDF A108 **Supply From:** DPHA **Mounting:** **Enclosure:** **Notes:**

Volts: 480/277V 3PH, 4W **Phases:** 3 **Wires:** 4

A.I.C. Rating: 65kAIC **Mains Type:** MCB **Mains Rating:** 225 A **MCB Rating:** 225 A

CKT	Circuit Description	Type	Trip	Poles	A	B	C	A	B	C	Poles	Trip	Type	Circuit Description	CKT
1	LTG - RM 105 - 107	L	20 A	1	1.61			0.05			1	20 A	L	LTG - ELEV MACHINE RM	2
3	LTG - RM 209 - 211, EXTERIOR	L	20 A	1		1.71			0.19		1	20 A	L	LTG - ELEV PIT AND SHAFT	4
5	LTG - RM 205 - 208B	L	20 A	1			2.08			0.96	1	15 A	L	INVERTER	6
7	LTG - RM 201 - 204	L	20 A	1	2.88			0.10			1	20 A	L	LIGHTING CONTROLS	8
9	LTG - RM 101 - 104	L	20 A	1		2.69			0.00		1	20 A	--	SPARE	10
11	LTG - RM 108 - 113, EXTERIOR	L	20 A	1			2.36			0.00	1	20 A	--	SPARE	12
13	SPARE	--	20 A	1	0.00			0.00			1	20 A	--	SPARE	14
15	SPARE	--	20 A	1		0.00			0.00		1	20 A	--	SPARE	16
17	SPARE	--	20 A	1			0.00			0.00	1	20 A	--	SPARE	18
19	SPARE	--	20 A	1	0.00			0.00			1	20 A	--	SPARE	20
21	SPARE	--	20 A	1		0.00			0.00		1	20 A	--	SPARE	22
23	SPARE	--	20 A	1			0.00			0.00	1	20 A	--	SPARE	24

DEMAND LOAD SUMMARY	CONNECTED...	DEMAND FACTOR	DEMAND KVA
TYPE "M": NON-CONTINUOUS / MIS...			
TYPE "L": LIGHTING / CONTINUOUS...	14.62	125.00%	18.28
TYPE "R": RECEPTACLES			
TYPE "H" HVAC / MECHANICAL...			
TOTALS:	14.62		18.28

PANEL TOTALS	kVA	AMPS	AMPS AT 125%
PHASE A:	4.64	16.766 A	20.958 A
PHASE B:	4.59	16.56 A	20.7 A
PHASE C:	5.40	19.521 A	24.402 A

HB1

Location: ELECTRICAL B107 **Supply From:** DPHB **Mounting:** **Enclosure:** **Notes:**

Volts: 480/277V 3PH, 4W **Phases:** 3 **Wires:** 4

A.I.C. Rating: 65kAIC **Mains Type:** MCB **Mains Rating:** 225 A **MCB Rating:** 225 A

CKT	Circuit Description	Type	Trip	Poles	A	B	C	A	B	C	Poles	Trip	Type	Circuit Description	CKT
1	LTG - RM 101 - 102	L	20 A	1	1.99			0.00			1	20 A	--	SPARE	2
3	LTG - RM 103 - 109	L	20 A	1		2.72			0.00		1	20 A	--	SPARE	4
5	LTG - SITE	L	20 A	1			0.35			0.18	1	15 A	L	INV-B	6
7	SPARE	--	20 A	1	0.00			0.00			1	20 A	--	SPARE	8
9	SPARE	--	20 A	1		0.00			0.00		1	20 A	--	SPARE	10
11	SPARE	--	20 A	1			0.00			0.00	1	20 A	--	SPARE	12
13	SPARE	--	20 A	1	0.00			0.00			1	20 A	--	SPARE	14
15	SPARE	--	20 A	1		0.00			0.00		1	20 A	--	SPARE	16
17	SPARE	--	20 A	1			0.00			0.00	1	20 A	--	SPARE	18
19	SPARE	--	20 A	1	0.00			0.00			1	20 A	--	SPARE	20
21	SPARE	--	20 A	1		0.00			0.00		1	20 A	--	SPARE	22
23	SPARE	--	20 A	1			0.00			0.00	1	20 A	--	SPARE	24

DEMAND LOAD SUMMARY	CONNECTED...	DEMAND FACTOR	DEMAND KVA
TYPE "M": NON-CONTINUOUS / MIS...			
TYPE "L": LIGHTING / CONTINUOUS...	5.25	125.00%	6.56
TYPE "R": RECEPTACLES			
TYPE "H" HVAC / MECHANICAL...			
TOTALS:	5.25		6.56

PANEL TOTALS	kVA	AMPS	AMPS AT 125%
PHASE A:	1.99	8.008 A	10.01 A
PHASE B:	2.72	10.613 A	13.266 A
PHASE C:	0.54	1.946 A	2.432 A

LA1

Location: ELEC/IDF A108 **Supply From:** TA **Mounting:** SURFACE **Enclosure:** NEMA 1 **Notes:**

*PROVIDE RED, 'LOCK-ON', CIRCUIT BREAKER

Volts: 120/208V 3PH, 4W **Phases:** 3 **Wires:** 4

A.I.C. Rating: 65kAIC **Mains Type:** MCB **Mains Rating:** 250 A **MCB Rating:** 250 A

CKT	Circuit Description	Type	Trip	Poles	A	B	C	A	B	C	Poles	Trip	Type	Circuit Description	CKT
1	PROJECTOR - CLASSROOM...	M	20 A	1	0.50			0.50			1	20 A	M	PROJECTOR - CLASSROOM...	2
3	REC - CLASSROOM A105	R	20 A	1		0.90			0.72		1	20 A	R	REC - CLASSROOM A111	4
5	REC - CLASSROOM A105	R	20 A	1			0.72			0.72	1	20 A	R	REC - CLASSROOM A111	6
7	REC - CLASSROOM A105	R	20 A	1	0.72			0.90			1	20 A	R	REC - CLASSROOM A111	8
9	PROJECTOR - CLASSROOM...	M	20 A	1		0.50			0.50		1	20 A	M	PROJECTOR - CLASSROOM...	10
11	REC - CLASSROOM A104	R	20 A	1			0.72			0.72	1	20 A	R	REC - CLASSROOM A106	12
13	REC - CLASSROOM A104	R	20 A	1	0.72			0.54			1	20 A	R	REC - CLASSROOM A106	14
15	REC - CLASSROOM A104	R	20 A	1		0.90			0.75		1	20 A	R	FRIDGE A106	16
17	PROJECTOR - CLASSROOM...	M	20 A	1			0.50			1.50	2	40 A	M	ELEC OVEN - A106	18
19	REC - CLASSROOM A103	R	20 A	1	0.72			1.50							20
21	REC - CLASSROOM A103	R	20 A	1		0.72			0.30		1	20 A	R	DISPOSAL - A106	22
23	REC - CLASSROOM A103	R	20 A	1			0.90			0.50	1	20 A	R	REC - KITCHENETTE COUNTER	24
25	PROJECTOR - CLASSROOM...	M	20 A	1	0.50			0.72			1	20 A	R	REC - CLASSROOM A110	26
27	REC - CLASSROOM A102	R	20 A	1		0.72			0.50		1	20 A	M	PROJECTOR - CLASSROOM...	28
29	REC - CLASSROOM A102	R	20 A	1			0.72			0.90	1	20 A	R	REC - CLASSROOM A110	30
31	REC - CLASSROOM A102	R	20 A	1	0.36			1.50			2	40 A	M	ELEC OVEN - A110	32
33	PROJECTOR - CLASSROOM...	M	20 A	1		0.50			1.50						34
35	REC - CLASSROOM A101	R	20 A	1			0.36			0.75	1	20 A	R	FRIDGE A110	36
37	REC - CLASSROOM A101	R	20 A	1	0.72			0.50			1	20 A	R	REC - KITCHENETTE COUNTE...	38
39	REC - CLASSROOM A101	R	20 A	1		0.72			0.30		1	20 A	R	DISPOSAL - A110	40
41	SPARE	--	20 A	1			0.00			0.90	1	20 A	R	REC - RM A106B	42
43	DRYER - LAUNDRY RM	M	30 A	2	0.55			0.90			1	20 A	R	REC - RM A110B	44
45						0.55			1.54		1	20 A	R	REC - RR'S, CORRIDOR,...	46
47	SPARE	--	20 A	1			0.00			0.00	1	20 A	--	SPARE	48
49	SECURITY PANEL	M	20 A	1	0.50			10.97			3	125 A	R; L; M	PANEL LA2	50
51	SPARE	--	20 A	1		0.00			11.52						52
53	WASHER - LAUNDRY RM	R	20 A	1			0.75			10.69					54
55	FIRE ALARM CONTROL PANEL*	M	20 A	1	0.50			0.07			1	15 A	H	HVAC - EFs LAUNDRY AND R...	56
57	SPARE	--	20 A	1		0.00			0.02		1	20 A	H	CONDENSATE PUMP FC A`08	58
59	SPARE	--	20 A	1			0.00			1.60	1	20 A	H	FSDs - 1ST FLOOR EAST WING	60
61	ELEV MACHING RM RECEPT	R	20 A	1	0.18			0.05			1	15 A	H	HVAC - EFs TOILET A208 /...	62
63	CONDENSATE PUMP ELEV FC	H	20 A	1		0.02			0.00		1	20 A	--	SPARE	64
65	ELEV PIT RECEPT	R	20 A	1			0.18			1.60	1	20 A	H	FSDs - 1ST FLOOR WEST WING	66
67	REC - EXTERIOR 2ND FLR	R	20 A	1	0.54			0.00			1	20 A	--	SPARE	68
69	REC - IDF BACKBOARD	R	20 A	1		0.36			0.36		1	20 A	H	EWH CIRC PUMP - CUST A207	70
71	REC - IDF BACKBOARD	R	20 A	1			0.36			0.02	1	15 A	H	HVAC - EF A106	72
73	REC - ELEC/IDF A108	R	20 A	1	0.54			1.46			2	20 A	H	HVAC - CU/FC A108	74
75	SPARE	--	20 A	1		0.00			1.46						76
77	REC - EXTERIOR	R	20 A	1			0.90			0.16	2	15 A	H	STRIP HEATER - FIRE RISER A107	78
79	ROOF RECEPTACLES	R	20 A	1	0.90			0.16							80
81	ROOF RECEPTACLES	R	20 A	1		0.72			2.08		2	20 A	H	HVAC - CU/FC A112	82
83	REC - FIRE RISER / EXTERIOR	R	20 A	1			0.36			2.08					84

DEMAND LOAD SUMMARY	CONNECTED...	DEMAND FACTOR	DEMAND KVA
TYPE "M": NON-CONTINUOUS / MIS...	18.25	100.00%	18.25
TYPE "L": LIGHTING / CONTINUOUS...	0.10	125.00%	0.13
TYPE "R": RECEPTACLES	55.00	59.09%	32.50
TYPE "H" HVAC / MECHANICAL...	11.14	100.00%	11.14
TOTALS:	84.49		62.01

PANEL TOTALS	kVA	AMPS	AMPS AT 125%
PHASE A:	27.71	230.933 A	288.667 A
PHASE B:	28.16	235.279 A	294.099 A
PHASE C:	28.61	238.996 A	298.745 A

LA2

Location: ELEC/IDF A108 **Supply From:** LA1 **Mounting:** SURFACE **Enclosure:** **Notes:**

Volts: 120/208V 3PH, 4W **Phases:** 3 **Wires:** 4

A.I.C. Rating: 65kAIC **Mains Type:** MCB **Mains Rating:** 125 A **MCB Rating:** 125 A

CKT	Circuit Description	Type	Trip	Poles	A	B	C	A	B	C	Poles	Trip	Type	Circuit Description	CKT
1	REC - CLASSROOM A205	R	20 A	1	0.72			0.90			1	20 A	R	REC - CLASSROOM A209	2
3	REC - CLASSROOM A205	R	20 A	1		0.72			0.72		1	20 A	R	REC - CLASSROOM A209	4
5	PROJECTOR - CLASSROOM...	M	20 A	1			0.50			0.72	1	20 A	R	REC - CLASSROOM A209	6
7	REC - CLASSROOM A205	R	20 A	1	0.90			0.50			1	20 A	M	PROJECTOR - CLASSROOM...	8
9	REC - CLASSROOM A204	R	20 A	1		0.72			0.90		1	20 A	R	REC - CLASSROOM A210	10
11	REC - CLASSROOM A204	R	20 A	1			0.90			0.72	1	20 A	R	REC - CLASSROOM A210	12
13	REC - CLASSROOM A204	R	20 A	1	0.72			0.72			1	20 A	R	REC - CLASSROOM A210	14
15	PROJECTOR - CLASSROOM...	M	20 A	1		0.50			0.50		1	20 A	M	PROJECTOR - CLASSROOM...	16
17	REC - CLASSROOM A203	R	20 A	1			0.90			0.50	1	20 A	M	PROJECTOR - CLASSROOM...	18
19	PROJECTOR - CLASSROOM...	M	20 A	1	0.50			0.72			1	20 A	R	REC - CLASSROOM A206	20
21	REC - CLASSROOM A203	R	20 A	1		0.72			0.72		1	20 A	R	REC - CLASSROOM A206	22
23	REC - CLASSROOM A203	R	20 A	1			0.72			0.72	1	20 A	R	REC - CLASSROOM A206	24
25	REC - CLASSROOM A202	R	20 A	1	0.72			0.18			1	20 A	R	REC - STAFF BREAK COUNTER	26
27	REC - CLASSROOM A202	R	20 A	1		0.72			0.18		1	20 A	R	REC - STAFF BREAK COUNTER	28
29	REC - CLASSROOM A202	R	20 A	1			0.90			1.08	1	20 A	R	REC - STAFF A208	30
31	PROJECTOR - CLASSROOM...	M	20 A	1	0.50			0.72			1	20 A	R	REC - FLEX OFFICE A208B	32
33	REC - CLASSROOM A201	R	20 A	1		0.72			0.75		1	20 A	R	FRIDGE - BREAK RM	34
35	REC - CLASSROOM A201	R	20 A	1			0.90			1.08	1	20 A	R	REC - STAFF A208 / A208B	36
37	REC - CLASSROOM A201	R	20 A	1	0.72			0.25			1	20 A	M	LIFT CHAIR - TOILET A110A	38
39	PROJECTOR - CLASSROOM...	M	20 A	1		0.50			0.95		1	15 A	M	HAND DRYER - TOILET A110A	40
41	LIGHTING CONTROLS	L	20 A	1			0.10			0.95	1	20 A	M	HAND DRYER - TOILET A106A	42
43	SPARE	--	20 A	1	0.00			0.00			1	20 A	--	SPARE	44
45	SPARE	--	20 A	1		0.00			0.00		1	20 A	--	SPARE	46
47	SPARE	--	20 A	1			0.00			0.00	1	20 A	--	SPARE	48
49	IDF RECEPTACLE - L5-30R	R	30 A	1	2.20			0.00			1	20 A	--	SPARE	50
51	SPARE	--	20 A	1		0.00			2.20		1	30 A	R	IDF RECEPTACLE - L5-30R	52
53	SPARE	--	20 A	1			0.00			0.00	1	20 A	--	SPARE	54

DEMAND LOAD SUMMARY	CONNECTED...	DEMAND FACTOR	DEMAND KVA
TYPE "M": NON-CONTINUOUS / MIS...	6.15	100.00%	6.15
TYPE "L": LIGHTING / CONTINUOUS...	0.10	125.00%	0.13
TYPE "R": RECEPTACLES	26.93	68.57%	18.47
TYPE "H" HVAC / MECHANICAL...			
TOTALS:	33.18		24.74

PANEL TOTALS	kVA	AMPS	AMPS AT 125%
PHASE A:	10.97	91.776 A	114.72 A
PHASE B:	11.52	96.359 A	120.449 A
PHASE C:	10.69	89.083 A	111.354 A

LOAD CALCULATION: DPHA

Volts: 480/277V 3PH, 4W **Phases:** 3 **Wires:** 4

A.I.C. Rating: 65kAIC **MCB Rating:** 1200 A **Enclosure Rating:** NEMA 1

Notes:

Circuit Description	Trip	Poles	Load (kVA)	Remarks
DPHB	400	3	119.29	
HM1	400	3	176.25	
HM2	400	3	174.92	
HA1	100	3	14.62	
TA	125	3	84.49	
ELEVATOR	125	3	77.32	
SPARE	100	3	0.00	
SPARE	100	3	0.00	
SPARE	100	3	0.00	
EWH - CUSTODIAN A207	20	2	3.00	
			649.89	

	CONNECTED	DEMAND	DEMAND kVA	Panel Totals	
MISCELLANEOUS	19.85 kVA	100.00%	19.85 kVA	TOTAL kVA:	649.89 kVA
LIGHTING	20.07 kVA	125.00%	25.09 kVA	MAX AMPS:	781.7 A
RECEPTACLE	86.28 kVA	55.80%	48.14 kVA	AMPS AT 125%	0 A
HVAC	523.69 kVA	100.00%	523.69 kVA		

Notes:

IDENTIFICATION STAMP
DIV. OF THE STATE ARCHITECT
APP: 01-119994 INC:
REVIEWED FOR
SS ☑ FLS ☑ ACS ☑
DATE: 08/16/2022

QUATTROCCHI KWOK ARCHITECTS
Main: 636 Fifth Street, Santa Rosa, CA 95404
East Bay: 55 Harrison Street, Suite 525, Oakland, CA 94607
(707) 576-0829

O'MAHONY & MYER
ELECTRICAL ENGINEERING & LIGHTING DESIGN
4340 REDWOOD HWY., SUITE 245
SAN RAFAEL, CALIFORNIA 94903
(415) 492-0420/FAX (415) 479-9662

REGISTERED PROFESSIONAL ENGINEER
PETER J. COLENBRANDER
No. 14738
Exp. 6/23
ELECTRICAL
STATE OF CALIFORNIA

LIBERTY HIGH SCHOOL

NEW CLASSROOM BUILDING

850 2ND STREET
BRENTWOOD, CA
94513

LIBERTY UNION HIGH SCHOOL DISTRICT

DSA APP NO. 01-119994

ARCH PROJECT NO:	1719.00
DRAWN BY:	JK /CL
DRAWING SCALE:	AS NOTED
PTN: 61721-83	FILE NO: 7-H4

CONSTRUCTION DOCUMENTS

JUNE 24, 2022

SHEET TITLE

PANEL SCHEDULES

SHEET NUMBER

E-6.1

LIBERTY HS NEW CLASSROOM BUILDINGS - 221960 R20

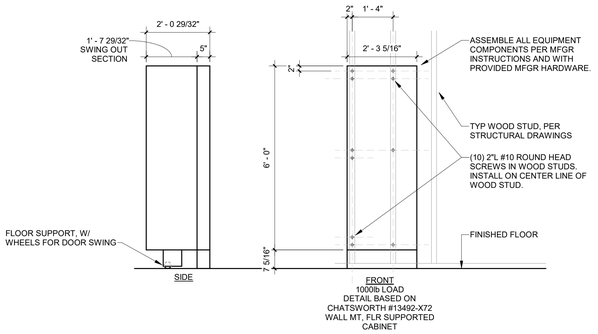

11 IDF RACK EQUIPMENT ANCHORAGE
1/2" = 1'-0"

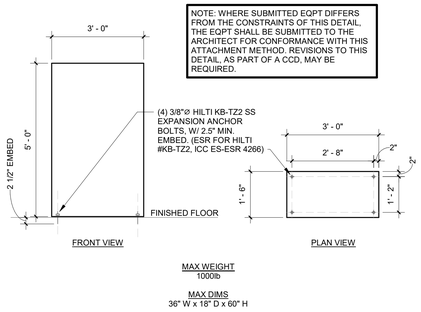

7 FREE STANDING EQUIPMENT ANCHORAGE
1/2" = 1'-0"

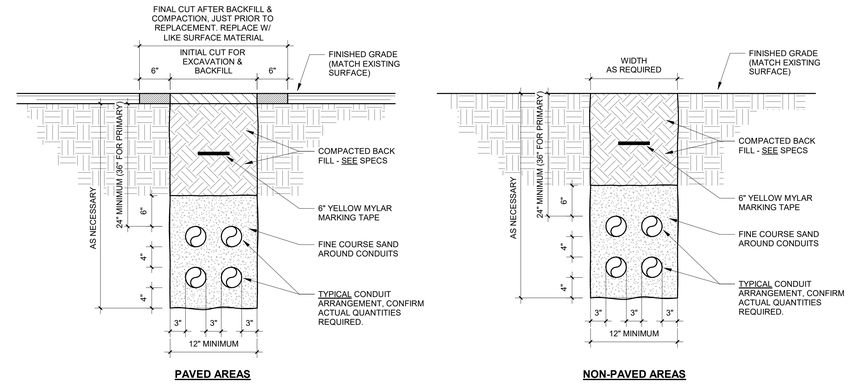

1 TYPICAL TRENCH SECTIONS
NO SCALE

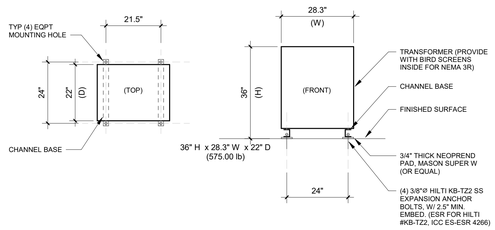

12 TRANSFORMER MOUNTING - FLOOR
1/2" = 1'-0"

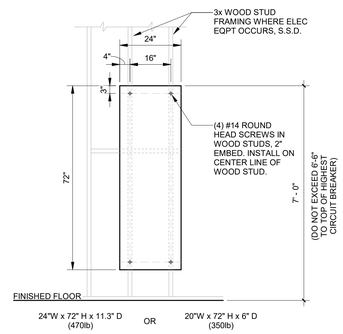

8 PANELBOARD MOUNTING - WOOD STUDS
1/2" = 1'-0"

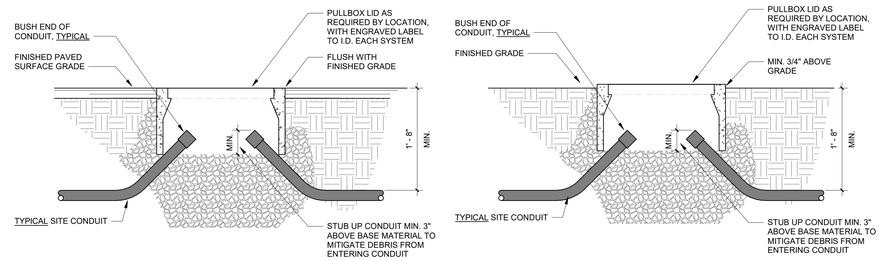

2 TYPICAL PULLBOX SECTION
NO SCALE

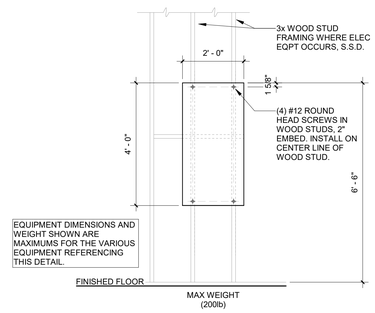

9 MOUNTING - WOOD STUDS - SIG / FA / LTG PANELS
1/2" = 1'-0"

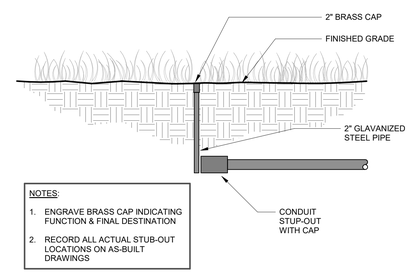

5 CONDUIT STUB-OUT
1" = 1'-0"

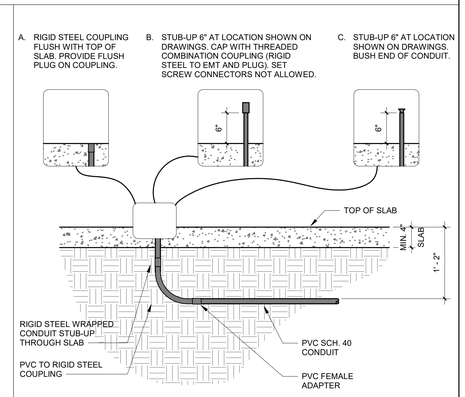

3 CONDUIT STUB-UP
NO SCALE

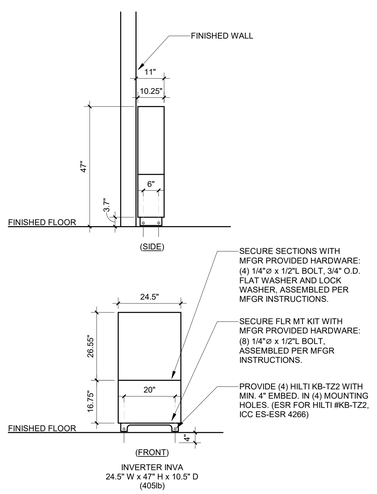

15 INVERTER "INVA" MOUNTING - FLOOR
1/2" = 1'-0"

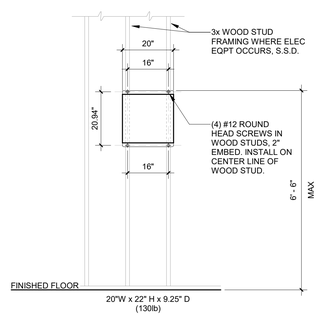

14 INVERTER "INVB" MOUNTING - WOOD STUDS
1/2" = 1'-0"

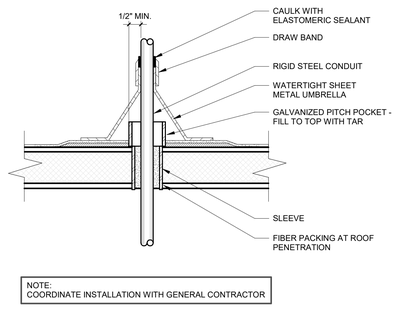

10 ROOF PENETRATION DETAIL
NO SCALE

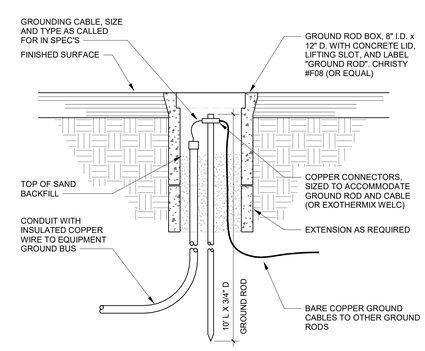

6 GROUND ROD - FINISHED SURFACE
NO SCALE

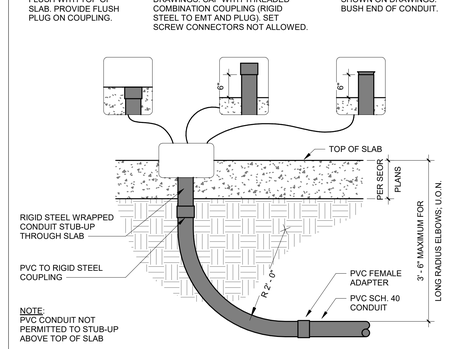

4 CONDUIT STUB-UP - FEEDERS - LONG RADIUS BENDS
NO SCALE

IDENTIFICATION STAMP
DIV. OF THE STATE ARCHITECT
APP: 01-119994 INC:
REVIEWED FOR
SS ☑ FLS ☑ ACS ☑
DATE: 08/16/2022

QUATTROCCHI KWOK ARCHITECTS
Main:
636 Fifth Street, Santa Rosa, CA 95404
East Bay:
55 Harrison Street, Suite 525,
Oakland, CA 94607
(707) 576-0829

O'MAHONY & MYER
ELECTRICAL ENGINEERING & LIGHTING DESIGN
4340 REDWOOD HWY., SUITE 245
SAN RAFAEL, CALIFORNIA 94903
(415) 492-0420 FAX (415) 479-9662

REGISTERED PROFESSIONAL ENGINEER
JOHN J. COLENBRANDER
No. 14738
Exp. 6/23
ELECTRICAL
STATE OF CALIFORNIA

LIBERTY HIGH SCHOOL

NEW CLASSROOM BUILDING

850 2ND STREET
BRENTWOOD, CA
94513

LIBERTY UNION HIGH SCHOOL DISTRICT

DSA APP NO.	01-119994
ARCH PROJECT NO:	1719.00
DRAWN BY:	JK
DRAWING SCALE:	AS NOTED
PTN: 61721-83	FILE NO: 7-H4

CONSTRUCTION DOCUMENTS

JUNE 24, 2022

SHEET TITLE

DETAILS

SHEET NUMBER

E-7.1

LIBERTY HS NEW CLASSROOM BUILDINGS - 221060 R20

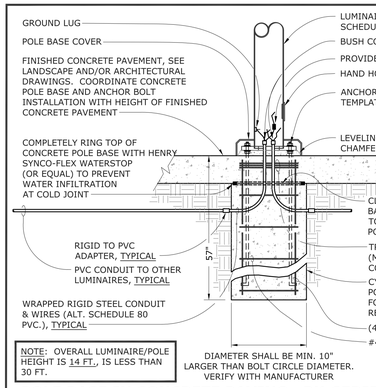

NOTE: OVERALL LUMINAIRE/POLE HEIGHT IS 14 FT., IS LESS THAN 30 FT.

POLE BASE IN CONCRETE PAVING: BK-SERIES

12 / E-7.2

SCALE: NOT TO SCALE
FILE: L:\DETAILS\LIGHT\POLEBASE\LPOLE015 (MODIFIED FOR 219013)

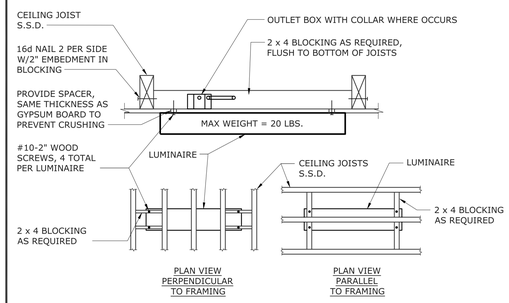

SURFACE MOUNTED LUMINAIRE

8 / E-7.2

SCALE: NONE
FILE: L:\LIGHT\SURFACE\LSURF003

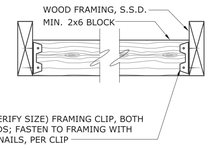

WOOD BLOCKING @ WOOD FRAMING

NOTES:
- BLOCKING IF AND WHERE REQUIRED, PER DETAIL ABOVE.

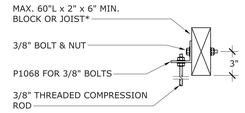

THREADED ROD ATTACHMENT @ WOOD BLOCKING OR FRAMING

THREADED ROD ATTACHMENT AT STRUCTURE

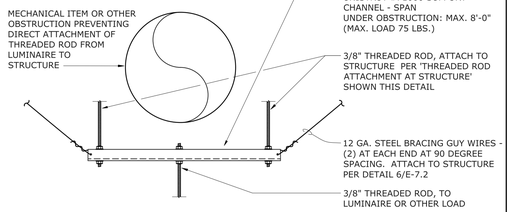

THREADED ROD ATTACHMENT AT OBSTRUCTED CONDITION

THREADED ROD CONNECTION

5 / E-7.2

SCALE: NONE
FILE: L:\DETAILS\LIGHT\BRACING\LBRAC001F - MODIFIED

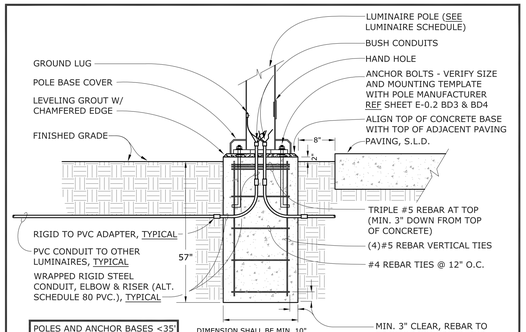

POLES AND ANCHOR BASES <35' EXEMPT FROM DSA STRUCTURAL REVIEW PER IR A-22

POLE BASE AT PLANTING AREA

1 / E-7.2

SCALE: NOT TO SCALE
FILE: L:\DETAILS\LIGHT\POLEBASE\LPOLE028

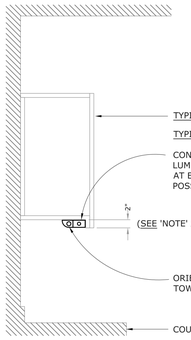

NOTE: E.C. SHALL CONFIRM WITH GENERAL CONTRACTOR THAT ALL PROVISIONS & COSTS FOR CABINET FACIA(S), REQUIRED TO CONCEAL UNDER-CABINET/UNDER-SHELF LUMINAIRES, ARE INCLUDED IN THE BID.

MAX WEIGHT LIMIT: 20 LBS

LUMINAIRE MOUNTING UNDER-CABINET OR SHELF

13 / E-7.2

SCALE: NOT TO SCALE
FILE: L:\DETAILS\LIGHT\FIXTURE - MISC\LFIXT006 (MODIFIED FOR 219013)

NOTES:

1. TRIM ALL EXCESS BRACING CABLES FOR A FINISHED AND TRIM FINAL INSTALLATION.
2. COORDINATE PROVISION OF STRUCTURAL BLOCKING IN WALLS FOR SWAY BRACING WITH GENERAL CONTRACTOR, PRIOR TO INSTALLATION OF GYP BOARD.

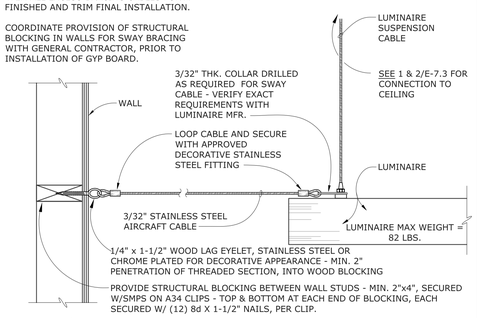

SWAY BRACE DETAIL AT WALL

9 / E-7.2

SCALE: NONE
FILE: L:\DETAILS\LIGHT\BRACING\LBRAC018 - MODIFIED

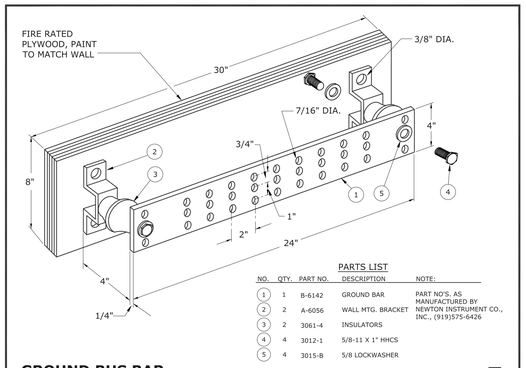

PARTS LIST

NO.	QTY.	PART NO.	DESCRIPTION	NOTE:
1	1	B-6142	GROUND BAR	PART NO'S. AS MANUFACTURED BY NEWTON INSTRUMENT CO., INC., (919)575-6426
2	2	A-6056	WALL MTG. BRACKET	
3	2	3061-4	INSULATORS	
4	4	3012-1	5/8-11 X 1" HHCS	
5	4	3015-B	5/8 LOCKWASHER	

GROUND BUS BAR

2 / E-7.2

SCALE: NONE
FILE: L:\DETAILS\POWER\GROUND\PGROU009

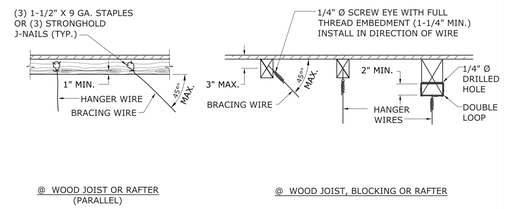

@ WOOD JOIST OR RAFTER (PARALLEL)

@ WOOD JOIST, BLOCKING OR RAFTER

HANGER & BRACING WIRES AT WOOD FRAMING

6 / E-7.2

SCALE: NONE
FILE: L:\DETAILS\LIGHT\BRACING\LBRAC002A - MODIFIED

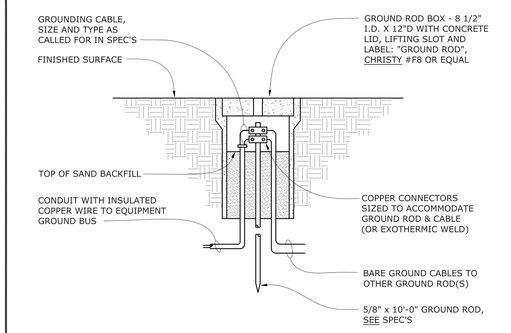

GROUND ROD INSTALLATION

3 / E-7.2

SCALE: NONE
FILE: L:\DETAILS\POWER\GROUND\PGROU002

NOTE: OVERALL LUMINAIRE/POLE HEIGHT IS 14 FT., IS LESS THAN 30 FT.

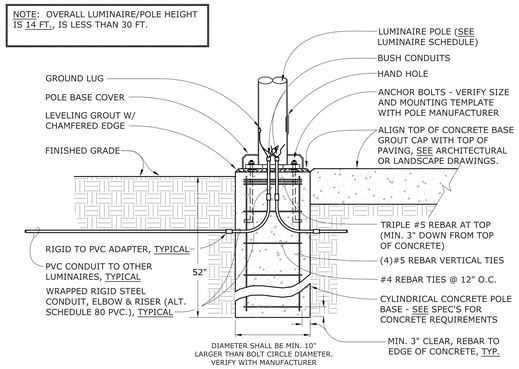

SIDE VIEW

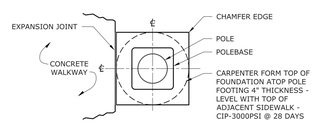

TOP VIEW

POLE BASE AT PLANTING AREA: BK-SERIES

11 / E-7.2

SCALE: NOT TO SCALE
FILE: L:\DETAILS\LIGHT\POLEBASE\LPOLE028 (MODIFIED FOR 219013)

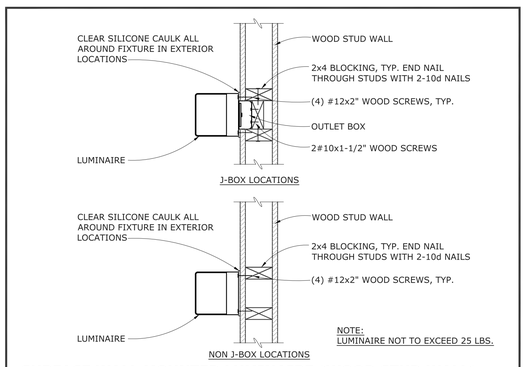

NOTE: LUMINAIRE NOT TO EXCEED 25 LBS.

SURFACE WALL MOUNTED LUMINAIRE (WOOD STUD WALL)

7 / E-7.2

SCALE: NONE
FILE: L:\DETAILS\LIGHT\SURFACE\LSURF020

IDENTIFICATION STAMP
DIV. OF THE STATE ARCHITECT
APP: 01-119994 INC:
REVIEWED FOR
SS ☑ FLS ☑ ACS ☑
DATE: 08/16/2022

QUATTROCCHI KWOK ARCHITECTS
Main:
636 Fifth Street, Santa Rosa, CA 95404
East Bay:
55 Harrison Street, Suite 525, Oakland, CA 94607
(707) 576-0829

O'MAHONY & MYER
ELECTRICAL ENGINEERING & LIGHTING DESIGN
4340 REDWOOD HWY., SUITE 245
SAN RAFAEL, CALIFORNIA 94903
(415) 492-0420/FAX (415) 479-9662
REGISTERED PROFESSIONAL ENGINEER
JOHN J. COLENBRANDER
No. 14738
Exp. 6/23
ELECTRICAL
STATE OF CALIFORNIA

LIBERTY HIGH SCHOOL

NEW CLASSROOM BUILDING

850 2ND STREET
BRENTWOOD, CA 94513

LIBERTY UNION HIGH SCHOOL DISTRICT

DSA APP NO. 01-119994
ARCH PROJECT NO: 1719.00
DRAWN BY: Author
DRAWING SCALE: AS NOTED
PTN: 61721-83 FILE NO: 7-H4
CONSTRUCTION DOCUMENTS
JUNE 24, 2022

SHEET TITLE

DETAILS

SHEET NUMBER

E-7.2

NOTE: LUMINAIRE WEIGHT LESS THAN 20LBS.

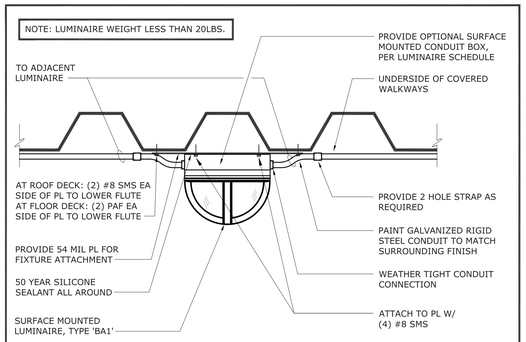

3 TYPICAL SURFACE MOUNTED LUMINAIRE IN COVERED WALKWAYS

SCALE: NOT TO SCALE
FILE: L:\DETAILS\LIGHT\SURFACE\LSURF007

NOTES: 1. LUMINAIRE SHALL BE FREE TO SWING 45° FROM THE VERTICAL IN ALL DIRECTIONS WITHOUT HITTING ANY OBSTRUCTION.
2. FOR CONNECTION OF COMPRESSION ROD AND GUY WIRES TO STRUCTURE - SEE DETAILS 5 & 6/E-7.2.

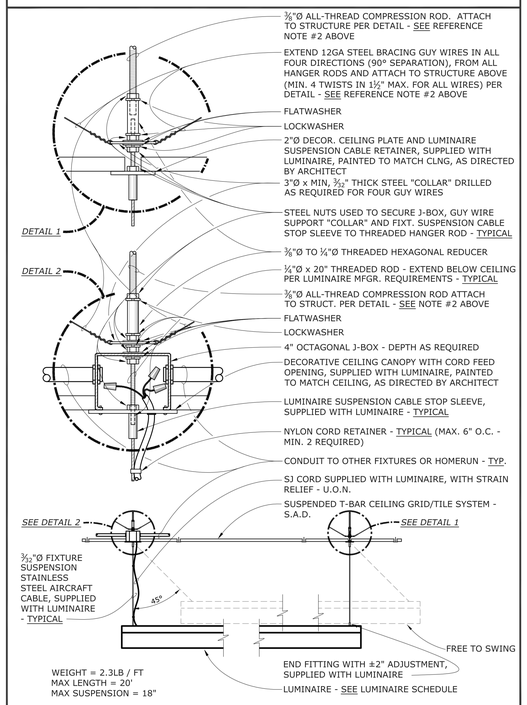

1 SUSPENDED LUMINAIRE: OFF-GRID MOUNTING - AT T-BAR CEILING

SCALE: NONE
FILE: L:\DETAILS\LIGHT\PENDANT\LPEND051

IDENTIFICATION STAMP
DIV. OF THE STATE ARCHITECT
APP: 01-119994 INC:
REVIEWED FOR
SS ☑ FLS ☑ ACS ☑
DATE: 08/16/2022

QUATTROCCHI KWOK ARCHITECTS
Main:
636 Fifth Street, Santa Rosa, CA 95404
East Bay:
55 Harrison Street, Suite 525,
Oakland, CA 94607
(707) 576-0829

O'MAHONY & MYER
ELECTRICAL ENGINEERING & LIGHTING DESIGN
4340 REDWOOD HWY., SUITE 245
SAN RAFAEL, CALIFORNIA 94903
(415) 492-0420/FAX (415) 479-9662

REGISTERED PROFESSIONAL ENGINEER
JOHN J. COLENBRANDER
No. 14738
Exp. 6/23
ELECTRICAL
STATE OF CALIFORNIA

LIBERTY HIGH SCHOOL

NEW CLASSROOM BUILDING

850 2ND STREET
BRENTWOOD, CA
94513

LIBERTY UNION HIGH SCHOOL DISTRICT

DSA APP NO. 01-119994

ARCH PROJECT NO:	1719.00
DRAWN BY:	Author
DRAWING SCALE:	AS NOTED
PTN: 61721-83	FILE NO: 7-H4

CONSTRUCTION DOCUMENTS

JUNE 24, 2022

SHEET TITLE

DETAILS

SHEET NUMBER

E-7.3

LIBERTY HS NEW CLASSROOM BUILDINGS - 221060 R20

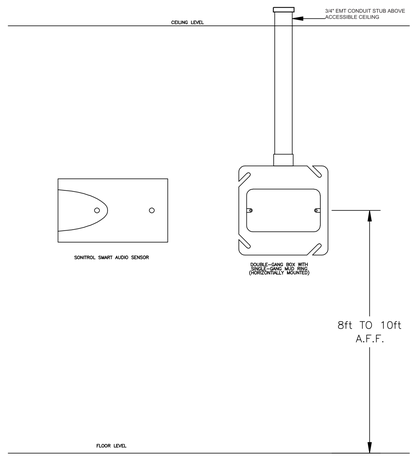

FOR MORE INFORMATION

DRAWN BY: RSG	DATE	SONITROL®	
CHECKED BY:	DATE		
SCALE: NTS		TITLE: SONITROL SMART AUDIO SENSOR WITH CONDUIT BACK BOX	
DGN FILE:			
PLOT DATE:			
SHEET OF		SIZE A	DRAWING NO. / REV

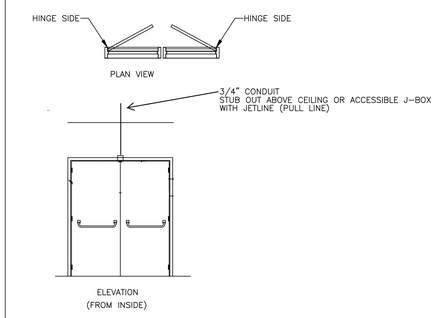

FOR MORE INFORMATION

DRAWN BY:	DATE	SONITROL®	
CHECKED BY:	DATE		
SCALE: NONE		TITLE: RECESS MOUNT APPLICATION FOR SECURITY CONTACTS (DOOR SWITCH) PRE-CONSTRUCTION SINGLE DOOR DETAIL	
DGN FILE:			
PLOT DATE:			
SHEET OF		SIZE A	DRAWING NO. / REV A

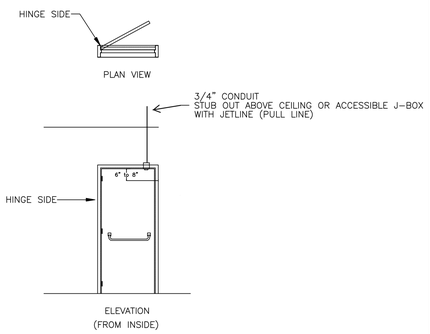

FOR MORE INFORMATION

DRAWN BY:	DATE	SONITROL®	
CHECKED BY:	DATE		
SCALE: NONE		TITLE: RECESS MOUNT APPLICATION FOR SECURITY CONTACTS (DOOR SWITCH) PRE-CONSTRUCTION SINGLE DOOR DETAIL	
DGN FILE:			
PLOT DATE:			
SHEET OF		SIZE A	DRAWING NO. / REV A

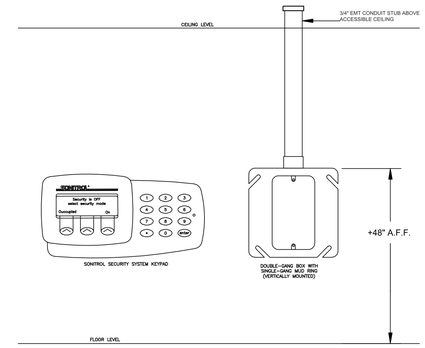

FOR MORE INFORMATION

DRAWN BY: RSG	DATE	SONITROL®	
CHECKED BY:	DATE		
SCALE: NTS		TITLE: SONITROL SECURITY SYSTEM KEYPAD WITH CONDUIT BACK BOX	
DGN FILE:			
PLOT DATE:			
SHEET OF		SIZE A	DRAWING NO. / REV

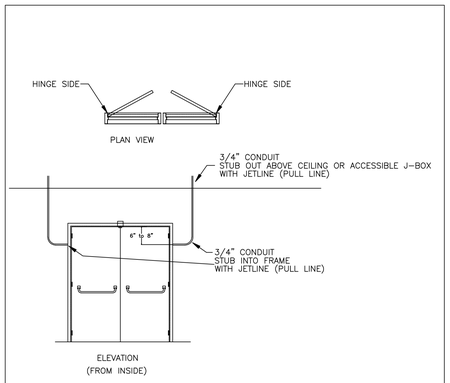

FOR MORE INFORMATION

DRAWN BY:	DATE	SONITROL®	
CHECKED BY:	DATE		
SCALE: NONE		TITLE: RECESS MOUNT APPLICATION FOR SECURITY CONTACTS (DOOR SWITCH) PRE-CONSTRUCTION SINGLE DOOR DETAIL	
DGN FILE:			
PLOT DATE:			
SHEET OF		SIZE A	DRAWING NO. / REV A

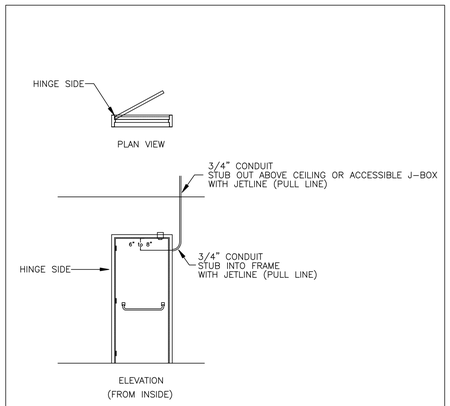

FOR MORE INFORMATION

DRAWN BY:	DATE	SONITROL®	
CHECKED BY:	DATE		
SCALE: NONE		TITLE: RECESS MOUNT APPLICATION FOR SECURITY CONTACTS (DOOR SWITCH) PRE-CONSTRUCTION SINGLE DOOR DETAIL	
DGN FILE:			
PLOT DATE:			
SHEET OF		SIZE A	DRAWING NO. / REV A

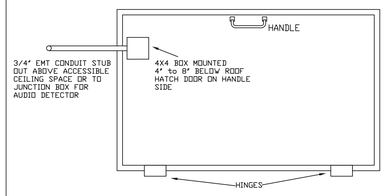

FOR MORE INFORMATION

DRAWN BY: RON	DATE 11/15/05	SONITROL®	
CHECKED BY: OSCAR	DATE 11/16/05		
SCALE: NTS		TITLE: ROOF HATCH TYPICAL JUNCTION BOX & CONDUIT INSTALLATION	
DGN FILE:			
PLOT DATE:			
SHEET 1 OF 1		SIZE A	DRAWING NO. / REV

IDENTIFICATION STAMP
DIV. OF THE STATE ARCHITECT
APP: 01-119994 INC:
REVIEWED FOR
SS ☑ FLS ☑ ACS ☑
DATE: 08/16/2022

QUATTROCCHI KWOK ARCHITECTS
Main:
636 Fifth Street, Santa Rosa, CA 95404
East Bay:
55 Harrison Street, Suite 525,
Oakland, CA 94607
(707) 576-0829

O'MAHONY & MYER
ELECTRICAL ENGINEERING & LIGHTING DESIGN
4340 REDWOOD HWY, SUITE 245
SAN RAFAEL, CALIFORNIA 94903
(415) 492-0420 FAX (415) 479-9662

REGISTERED PROFESSIONAL ENGINEER
RICHARD J. COLENBRANDER
No. 14738
Exp. 6/23
ELECTRICAL
STATE OF CALIFORNIA

LIBERTY HIGH SCHOOL

NEW CLASSROOM BUILDING

850 2ND STREET
BRENTWOOD, CA
94513

LIBERTY UNION HIGH SCHOOL DISTRICT

DSA APP NO. 01-119994

ARCH PROJECT NO:	1719.00
DRAWN BY:	Author
DRAWING SCALE:	AS NOTED
PTN: 61721-83	FILE NO: 7-H4

CONSTRUCTION DOCUMENTS

JUNE 24, 2022

SHEET TITLE

DETAILS

SHEET NUMBER

E-7.4

NUMBERED DETAIL NOTES

1. MASTER CONTROL/ANNUNCIATOR PANEL - CORNELL #A-4204. SURFACE-MOUNTED ON WALL AT MAIN CAMPUS OFFICE.
2. INTERIOR REMOTE CALL STATION AT 2ND FLOOR ELEVATOR LOBBY. CORNELL #4101A.
3. POWER SUPPLY - CORNELL #B-5243A.
4. PROVIDE AND INSTALL REMOTE CALL STATION CABLING AND CONNECT COMPLETE - CORNELL #CB-4200. CABLE LENGTH NOT TO EXCEED 3000 FEET PER MANUFACTURER'S SPECIFICATIONS.
5. PROVIDE AND INSTALL (2)#16 & (1)#16G. IN 3/4"C. AND CONNECT COMPLETE. CABLE LENGTH NOT TO EXCEED 500 FEET PER MANUFACTURER'S SPECIFICATIONS.
6. TELEPHONE ACCESS KIT - CORNELL #TAK-4202.
7. UPS FOR BACKUP POWER FOR TELEPHONE ACCESS KIT - APC #SMT750 OR EQUAL.
8. CONNECT COMPLETE TO 120VAC POWER SOURCE.

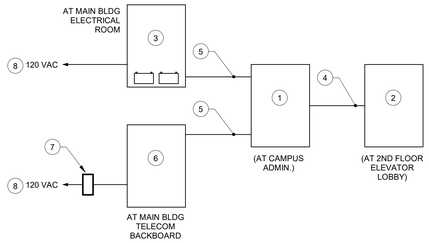

REQUIRED SEQUENCE OF OPERATION:

1. UPON ACTIVATION OF THE AREA OF REFUGE CALL BUTTON (NOTE 2), A SIGNAL SHALL BE ANNUNCIATED AT THE MASTER CONTROL STATION AT THE MAIN OFFICE (NOTE 1). WHEN ACKNOWLEDGED BY THE MAIN OFFICE STATION, HANDS-FREE TWO-WAY COMMUNICATIONS SHALL BE INITIATED BETWEEN THE MAIN OFFICE CONTROL STATION AND THE AREA OF REFUGE CALL BUTTON STATION.
2. IF NO ACKNOWLEDGEMENT IS ACTIVATED AT THE MAIN DESK AFTER A PRE-DETERMINED TIME FROM 0 TO 999 SECONDS FROM CALL BUTTON ACTIVATION, THE AUTOMATIC TELEPHONE INTERFACE (NOTE 8), SHALL INITIATE AN AUTOMATIC PHONE CALL TO A PRE-DETERMINED PHONE NUMBER (911 OR CENTRAL STATION) AND PLAY A PRE-RECORDED EMERGENCY MESSAGE.
3. COORDINATE WITH THE OWNER FOR DELAY TIME ON AUTOMATIC TELEPHONE INTERFACE, PHONE NUMBER TO DIAL, AND PRE-RECORDED MESSAGE CONTENT.
4. INCLUDE ALL REQUIRED SET-UP, COMMISSIONING, AND TESTING, INCLUDING TELEPHONE CONNECTION, FOR A FULLY OPERATING SYSTEM UPON COMPLETION.

2 AREA OF REFUGE COMMUNICATION SYSTEM
NO SCALE

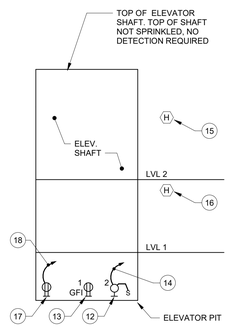

SHAFT SECTION VIEW

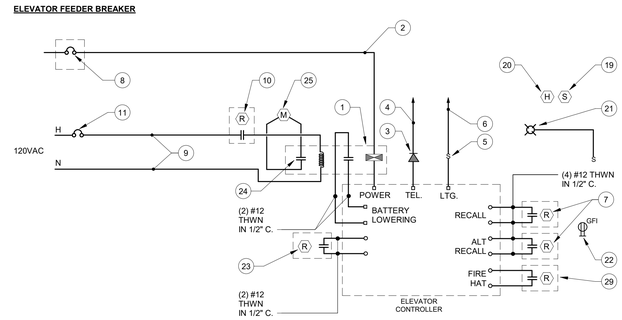

ELEVATOR MACHINE ROOM

ELEVATOR SYSTEM DETAIL NOTES

1. 3-PHASE ELEVATOR MACHINE COMBINATION DISCONNECT / SHUNT TRIP DEVICE WITH AUX. DRY CONTACT FOR POSITION STATUS TO BATTERY LOWERING DEVICE AND FIRE ALARM SHUNT TRIP VOLTAGE MONITOR RELAY. BUSSMANN #PS SERIES OR EQUAL. CONNECT COMPLETE TO ELEVATOR MACHINE, FIRE ALARM, AND LOWERING DEVICE CONTACTS.
2. ELEVATOR FEEDER. SEE SINGLE LINE DIAGRAM FOR SIZE.
3. ELEVATOR CAB EMERGENCY TELEPHONE LINE BOX AT ELEVATOR MACHINE ROOM. CONNECT COMPLETE TO ELEVATOR CONTROLLER.
4. (1) 4-PAIR TELEPHONE CABLE TO TELEPHONE BACKBOARD. COORDINATE TELEPHONE CROSS-CONNECTION AND ACTIVATION WITH OWNER.
5. ELEVATOR CAB LIGHTING OCPD/DISCONNECT AT ELEVATOR MACHINE ROOM ON DEDICATED CIRCUIT. DISCONNECT SHALL BE CAPABLE OF BEING LOCKED IN THE OPEN POSITION AND SHALL INCLUDE OVERCURRENT PROTECTION. CONNECT COMPLETE TO ELEVATOR CONTROLLER.
6. DEDICATED 120VAC BRANCH CIRCUIT FOR ELEVATOR CAB LIGHTING.
7. ELEVATOR RECALL AND ALTERNATE RECALL FIRE ALARM SYSTEM ADDRESSABLE RELAY MODULES AT ELEVATOR MACHINE ROOM. PROGRAM FOR RECALL FUNCTIONS PER ELEVATOR LOBBY DETECTOR ALARMS.
8. ELEVATOR FEEDER BREAKER.
9. CONNECT SHUNT-TRIP COMPLETE WITH (2)#12 + (1)#12G IN ½" CONDUIT VIA FIRE ALARM RELAY MODULE.
10. FIRE ALARM SYSTEM ADDRESSABLE RELAY MODULE LOCATED IN SAME ROOM AS ELEVATOR DISCONNECT / SHUNT TRIP DEVICE. IN ACCESSIBLE AND LABELED LOCATION. PROGRAM TO ACTIVATE ELEVATOR SHUNT TRIP UPON ANY ELEVATOR MACHINE ROOM OR ELEVATOR SHAFT HEAT DETECTOR ALARM.
11. DEDICATED 120VAC BRANCH CIRCUIT FOR ELEVATOR SHUNT TRIP.
12. 120V LENSED PIT LIGHTS AND SWITCH (NEMA 4 RATED). COORDINATE EXACT LOCATIONS WITH ELEVATOR INSTALLER FOR BEST LIGHT DISTRIBUTION IN PIT AND LOCATE SWITCH ADJACENT ELEVATOR PIT LADDER OR ENTRY POINT. CONNECT TO BRANCH CIRCUIT PER NOTE 14.
13. PIT GFCI RECEPTACLE. COORDINATE EXACT LOCATION WITH ELEVATOR INSTALLER. PROVIDE NEMA 4 RATED COVERPLATE. CONNECT TO BRANCH CIRCUIT PER NOTE 14.
14. PROVIDE SEPARATE 120VAC 20A DEDICATED CIRCUITS FOR ELEVATOR PIT LIGHT AND RECEPTACLE (TOTAL OF (2) CIRCUITS).
15. LEVEL 2 FIRE ALARM SYSTEM EXTERIOR HEAT DETECTOR. PROGRAM TO ACTIVATE MAIN ELEVATOR RECALL RELAY MODULE AT ELEVATOR MACHINE ROOM UPON ALARM.
16. MAIN FLOOR ELEVATOR LEVEL 1 FIRE ALARM SYSTEM EXTERIOR HEAT DETECTOR. PROGRAM TO ACTIVATE ALTERNATE RECALL RELAY MODULE AT ELEVATOR MACHINE ROOM UPON ALARM.
17. ELEVATOR PIT SUMP PUMP RECEPTACLE. LOCATE ADJACENT SUMP PIT. PROVIDE NEMA 4 RATED COVERPLATE.
18. PROVIDE DEDICATED SUMP PUMP 120VAC 20A CIRCUIT FOR SUMP PUMP.
19. FIRE ALARM SYSTEM SMOKE DETECTOR IN ELEVATOR MACHINE ROOM. PROGRAM TO ACTIVATE ELEVATOR MAIN RECALL AND FIRE HAT FUNCTION UPON ALARM.
20. FIRE ALARM SYSTEM HEAT DETECTOR IN MACHINE ROOM, LOCATED WITHIN 24" OF EACH SPRINKLER HEAD. PROGRAM TO ACTIVATE ELEVATOR SHUNT TRIP UPON ALARM.
21. ELEVATOR MACHINE ROOM LIGHT WITH LOCAL SWITCH ON DEDICATED CIRCUIT.
22. 120V ELEVATOR MACHINE ROOM GFCI RECEPTACLE ON DEDICATED CIRCUIT.
23. FIRE ALARM SYSTEM ADDRESSABLE RELAY MODULE AT ELEVATOR MACHINE ROOM - PROGRAMMED TO ACTIVATE WHEN ELEVATOR SHUNT TRIP MODULE IS ACTIVATED (TO PREVENT ACTIVATION OF EMERGENCY BATTERY LOWERING DEVICE).
24. FIRE ALARM SYSTEM POWER SUPERVISORY RELAY MODULE (IN ELEVATOR DISCONNECT / SHUNT TRIP ASSEMBLY, WIRED TO ACTIVATE MONITOR MODULE UPON LOSS OF SHUNT TRIP CIRCUIT VOLTAGE PER 2013 NFPA 72 SECTION 21.4.4.
25. FIRE ALARM SYSTEM ADDRESSABLE MONITOR MODULE - PROGRAM TO ACTIVATE SUPERVISORY SIGNAL UPON LOSS OF SHUNT TRIP CIRCUIT VOLTAGE IN COMPLIANCE WITH 2013 NFPA 72 SECTION 21.4.4.

1 ELEVATOR SYSTEM REQUIREMENTS (COMBINATION SHUNT TRIP DISCONNECT)
NO SCALE

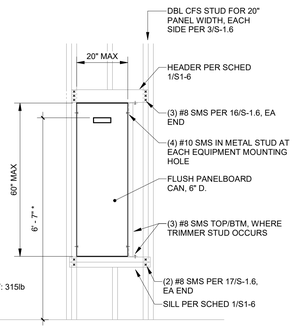

8 WALL MOUNTED ELECTRICAL PANEL ANCHORAGE - STEEL STUDS
1/2" = 1'-0"

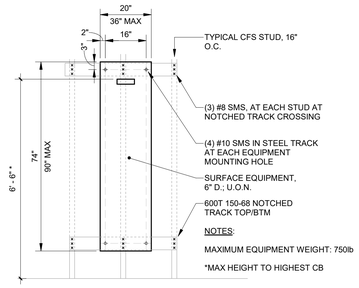

6 WALL MOUNTED ELECTRICAL PANELBOARD ATTACHMENT - STEEL STUDS
1/2" = 1'-0"

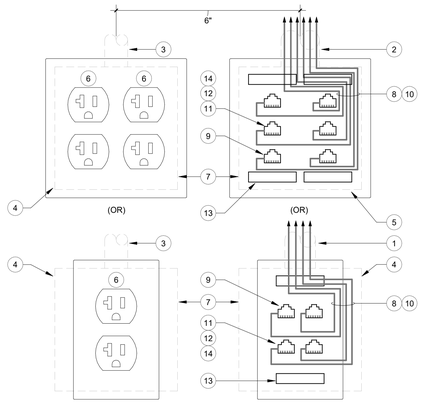

DETAIL NUMBERED NOTES

1. PROVIDE 1" CONDUIT STUBBED UP TO NEAREST ACCESSIBLE CONCEALED CEILING, U.O.N. - BUSH CONDUIT END(S)
2. PROVIDE 1-1/4" CONDUIT STUBBED UP TO NEAREST ACCESSIBLE CONCEALED CEILING, U.O.N. - BUSH CONDUIT END(S)
3. POWER CONDUIT & WIRES - SEE FLOOR PLANS
4. PROVIDE 4" SQUARE BOX, 2-1/8" DEEP, WITH TWO-GANG PLASTER RING
5. PROVIDE 4" SQUARE BOX, 3-1/2" DEEP, WITH TWO-GANG PLASTER RING
6. PROVIDE 20AMP, 120V, 3PG DOUBLE DUPLEX RECEPTACLE
7. LOCATE BOXES ADJACENT TO EACH OTHER & ALIGN COVER PLATES
8. TERMINATE CABLES AT EACH JACK. PROVIDE QUANTITY OF JACKS AS NOTED ON PLANS
9. WHERE NO DATA JACK IS REQUIRED, PROVIDE BLANK SPACER.
10. PROVIDE HOMERUN DATA CABLES TO RESPECTIVE PATCH PANEL.
11. MODULAR FACEPLATE WITH ANGLED OR FLAT EXIT (VERIFY WITH I.T. STANDARDS.
12. TYPICAL 8 PIN 8 POS, T568B DATA JACK, COLORED BLUE (VERIFY WITH I.T. STANDARDS).
13. PANDUIT, EFPL-1, 1.80 x 0.375 INCH. WHITE, POLYESTER LABEL. LABELS SHALL HAVE CAPACITY FOR 2 COLUMNS FOR LASER PRINTERS AND SHALL BE LABELED AS NOTED IN SPECIFICATIONS (VERIFY WITH I.T. STANDARDS).
14. SEE FLOOR PLANS FOR QUANTITY & TYPE OF JACKS IN EACH LOCATION.
15. TYPICAL SINGLE OR DOUBLE GANG FACEPLATE, FINISH AS DIRECTED BY ARCHITECT.

3 COMBINATION POWER & DATA OUTLETS
NO SCALE

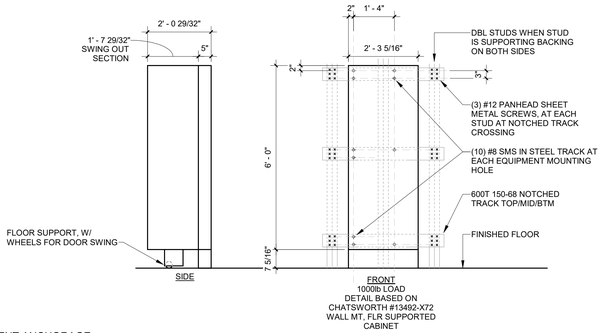

9 IDF RACK EQUIPMENT ANCHORAGE
1/2" = 1'-0"

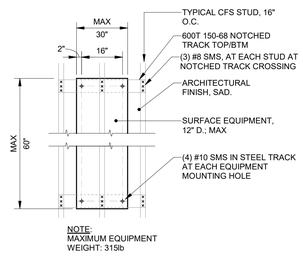

7 TYPICAL WALL MOUNTED EQUIPMENT - STEEL STUDS
1/2" = 1'-0"

DETAIL NOTES

1. LABEL LOCATION AT FIBER OPTIC RISER CABLE, LABEL TYPE PANDUIT MMP350-C .75" x 3.5" 316 STAINLESS, MACHINE .25" H PRINTING.

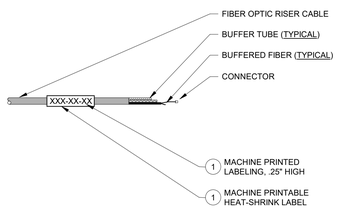

5 TYPICAL FIBER OPTIC CABLE LABELING
NONE

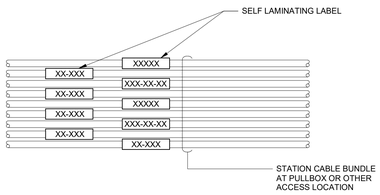

4 TYPICAL STATION CABLE LABELING
NO SCALE

IDENTIFICATION STAMP
DIV. OF THE STATE ARCHITECT
APP: 01-119994 INC:
REVIEWED FOR
SS ☑ FLS ☑ ACS ☑
DATE: 08/16/2022

QUATTROCCHI KWOK ARCHITECTS
Main:
636 Fifth Street, Santa Rosa, CA 95404
East Bay:
55 Harrison Street, Suite 525,
Oakland, CA 94607
(707) 576-0829

O'MAHONY & MYER
ELECTRICAL ENGINEERING & LIGHTING DESIGN
4340 REDWOOD HWY., SUITE 245
SAN RAFAEL, CALIFORNIA 94903
(415) 492-0420/FAX (415) 479-9662
REGISTERED PROFESSIONAL ENGINEER
JOHN J. COLENBRANDER
No. 14738
Exp. 6/23
ELECTRICAL
STATE OF CALIFORNIA

LIBERTY HIGH SCHOOL

NEW CLASSROOM BUILDING

850 2ND STREET
BRENTWOOD, CA
94513

LIBERTY UNION HIGH SCHOOL DISTRICT

DSA APP NO. 01-119994

ARCH PROJECT NO:	1719.00
DRAWN BY:	Author
DRAWING SCALE:	AS NOTED
PTN: 61721-83	FILE NO: 7-H4

CONSTRUCTION DOCUMENTS

JUNE 24, 2022

SHEET TITLE

DETAILS

SHEET NUMBER

E-7.5

LIBERTY HS NEW CLASSROOM BUILDINGS - 221060 R20

FIRE ALARM SCOPE OF WORK

1. PROVIDE A NEW NETWORKED FIRE ALARM CONTROL PANEL AND AUDIO AMPLIFIER PANEL AT THE NEW BUILDING(S). REPROGRAM EXISTING FACP TO SUPPORT THE (N) DEVICES, FULLY NETWORKED TO THE (E) NOTIFIER FIRE ALARM NETWORK ALREADY ACTIVE AT THE CAMPUS.
2. REPROGRAM THE (E) FIRE ALARM NETWORK TO ACCOMMODATE THE (N) PANEL AND EQUIPMENT / DEVICES, TO ALLOW FULL ANNUNCIATION OF ALL (N) EQUIPMENT AT THE (E) MAIN CAMPUS FACP, (E) MAIN CAMPUS ANNUNCIATOR, AND (E) OFF-SITE MONITORING.
3. TERMINATE EACH NOTIFICATION CIRCUIT TO THE (N) FACP AND/OR FAEP AS SHOWN ON PLANS AND RISER DIAGRAMS.
4. TERMINATE THE INITIATION CIRCUITS TO THE FACP AS SHOWN ON PLANS AND RISER DIAGRAMS.
5. TERMINATE THE AUDIO SPEAKER CIRCUITS TO THE FACP / AMPLIFIER AS SHOWN ON PLANS AND RISER DIAGRAMS.

FIRE ALARM SYSTEM DESCRIPTION

1. THE FIRE ALARM SYSTEM SHALL BE AN AUTOMATIC ADDRESSABLE SYSTEM WITH STYLE 4, CLASS B WIRING FOR IDC'S, NAC'S, AND SLC'S WITH EMERGENCY VOICE / ALARM COMMUNICATIONS.
2. PROVIDE COMPLETE PROGRAMMING, AND ALL NECESSARY DEVICES FOR COMPLETE SYSTEM.
3. CIRCUIT PATHWAY SURVIVABILITY SHALL BE LEVEL 1.
4. PROVIDE AND INSTALL NEW EQUIPMENT, DEVICES AND REQUIRED MODULES AND PROVIDE CONNECTIONS COMPLETE FOR A FULLY FUNCTIONING EXPANSION OF THE EXISTING FIRE ALARM SYSTEM.
5. THE NAME OF THE SPECIFIC PERSON RESPONSIBLE FOR THE SYSTEM DESIGN IS JUSTIN KIRK (O'MAHONY & MYER).
6. SYSTEM INSTALLATION SHALL BE BY A LICENSED ELECTRICAL OR FIRE ALARM CONTRACTOR WITH A CALIFORNIA C-10 LICENSE, REGULARLY ENGAGED IN THE INSTALLATION AND COMMISSIONING OF FIRE ALARM SYSTEMS TO NFPA 72 STANDARDS. INSTALLING CONTRACTOR'S NAME AND CONTACT INFORMATION SHALL BE LISTED IN THE NFPA CLOSE OUT DOCUMENTATION AT COMPLETION OF PROJECT.

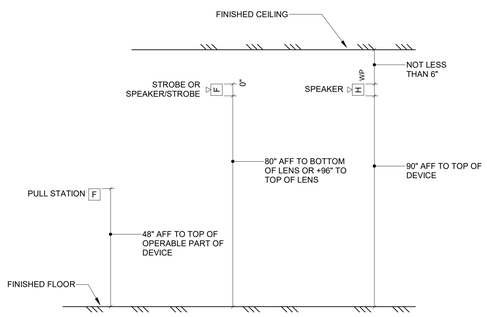

1 FIRE ALARM DEVICE MOUNTING HEIGHT DETAIL
NO SCALE

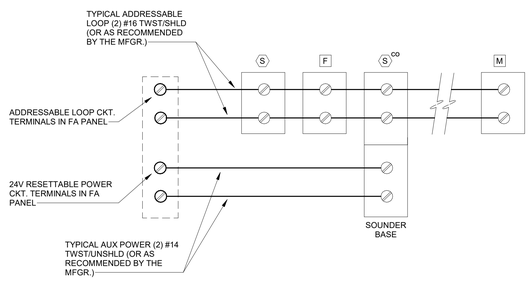

2 TYPICAL ADDRESSABLE INITIATION LOOP WIRING
NO SCALE

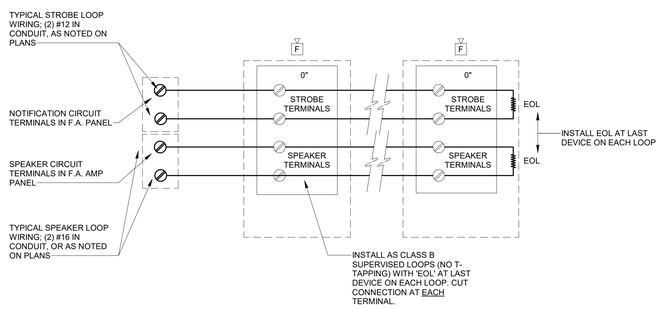

3 TYPICAL NOTIFICATION / SPEAKER CIRCUIT WIRING
NO SCALE

SEQUENCE OF OPERATION MATRIX

		RESPONSE							
		ANNUNCIATE AT FIRE ALARM CONTROL PANEL (FACP)	ANNUNCIATE AT FIRE ALARM ANNUNCIATOR PANEL (FAAP)	ANNUNCIATE AT OFF-SITE MONITORING STATION	ANNUNCIATE AUDIBLE/VISUAL DEVICES IN ALL AREAS	SHUTDOWN OF APPLICABLE HVAC UNIT AND/OR MOTORIZED DAMPERS	ACTIVATE ELEVATOR RECALL	FACILITY PERSONNEL TO NOTIFY FIRE DEPARTMENT	
ACTIVATION IS INITIATION DEVICES	MANUAL PULL STATION	X	X	X	X	X	X	X	
	AREA SMOKE OR HEAT DETECTOR	X	X	X	X	X	X	X	
	SPRINKLER FLOW SWITCH	X	X	X	X	X	X	X	
MALFUNCTION	INITIATION CIRCUITS	X	X	X					
	NOTIFICATION APPLIANCE CIRCUITS	X	X	X					
	FIRE ALARM CONTROL PANEL (FACP)	X	X	X					
	FIRE ALARM ANNUNICATOR PANEL (FAAP)	X	X	X					
	FIRE ALARM EXTENDER PANEL (FAEP) OR REMOTE AMPLIFIER	X	X	X					
	POWER FAILURE	X	X	X					
SUPERVISORY INDICATORS	SPRINKLER TAMPER SWITCH	X	X	X					
	POST INDICATOR VALVE	X	X	X					
	CHECK VALVE TAMPER SWITCH	X	X	X					

SEQUENCE OF OPERATION NOTES

1. ACTIVATION OF ANY INITIATION DEVICE WILL PLACE THE FIRE ALARM CONTROL PANEL IN ALARM MODE AND WILL ACTIVATE ALL NOTIFICATION APPLIANCES. THE FIRE ALARM CONTROL PANEL SHALL DISPLAY THE ZONE (NON-ADDRESSABLE) OR DEVICE (ADDRESSABLE) OF THE ACTIVATED INITIATION DEVICE(S).
2. UPON ALARM CONDITION, AUTO-DIALER TO NOTIFY THE OFF-SITE MONITORING STATION, AND AUTHORIZED SCHOOL PERSONNEL SHALL NOTIFY THE FIRE DEPARTMENT AND INITIATE EVACUATION OF STUDENTS AND FACULTY AS PER THE SCHOOL'S EVACUATION PLAN.
3. WHEN THE PANEL IS ALARM CONDITION, THE NOTIFICATION APPLIANCES MAY BE DEACTIVATED ("SILENCED") AT THE FIRE ALARM CONTROL PANEL. ACTIVATION OF ANOTHER INITIATION DEVICE WILL PLACE THE CONTROL PANEL BACK IN ALARM CONDITION AND WILL AGAIN ACTIVATE ALL NOTIFICATION APPLIANCES.
4. FAILURE OF THE FIRE ALARM SYSTEM COMPONENTS, WIRING OR POWER SUPPLY SHALL PLACE THE FIRE ALARM CONTROL PANEL IN TROUBLE CONDITION, RESULTING IN AN AUDIBLE AND VISUAL (LED) ALARM AT THE FIRE ALARM CONTROL PANEL ONLY. THE AUDIBLE ALARM MAY BE SILENCED AT THE CONTROL PANEL, BUT THE VISUAL ALARM WILL REMAIN ACTIVE UNTIL THE FAILED CONDITIONS ARE CORRECTED AND CLEARED.
5. UPON TROUBLE CONDITION, AUTO-DIALER TO NOTIFY THE OFF-SITE MONITORING STATION, AND AUTHORIZED SCHOOL PERSONNEL SHALL NOTIFY THE AUTHORIZED TECHNICIAN TO CORRECT THE TROUBLE CONDITION.
6. UPON CO DETECTION, IT SHALL ANNUNCIATE AN ALARM AT THE FACP AND REMOTE ANNUNCIATOR ONLY AND SHALL ACTIVATE THE CO DETECTOR SOUNDER BASE WITH TEMPORAL 4 FORM IN THE CLASSROOM. SCHOOL PERSONNEL TO NOTIFY THE OCCUPANTS IMMEDIATELY AND INITIATE EVACUATION OF STUDENTS & FACULTY.

GENERAL FIRE ALARM NOTES

1. FINAL FIRE ALARM TEST SHALL BE MADE WITH THE DSA INSPECTOR OF RECORD (IOR). LOCAL FIRE AUTHORITY SHALL BE NOTIFIED OF DATE AND TIME OF FINAL ALARM TESTING AND SHALL ASSIST/WITNESS SUCH TESTING WHEN ABLE. DSA/ARCHITECT/ENGINEER AND OWNER SHALL BE NOTIFIED A MINIMUM OF (48) HOURS PRIOR TO THE FINAL INSPECTION AND/OR TESTING.
2. FIRE ALARM CONTRACTOR SHALL PROVIDE SYSTEM PROGRAMMING FOR SUPERVISORY MONITORING PER CBC SECTION 901.6.2. MONITORING SHALL BE TESTED AND VERIFIED AS SENDING THE CORRECT SIGNALS IN CONJUNCTION WITH FINAL ACCEPTANCE TEST. OWNER SHALL BE RESPONSIBLE FOR ESTABLISHING A FIRE SYSTEM MONITORING CONTRACT AND/OR PROVISIONS
3. UNDERGROUND AND EXTERIOR CONDUITS SHALL HAVE WATERTIGHT FITTINGS.
4. FIRE ALARM DEVICE MOUNTING HEIGHTS:
   a. PULL STATION: 48" TO TOP OF OPERATOR ABOVE FINISHED FLOOR
   b. SPEAKER INTERIOR/EXTERIOR: 90" MIN. TO TOP OF DEVICE ABOVE FINISHED FLOOR, OR 100" MAX TO TOP OF DEVICE, BUT NOT LESS THAN 6" FROM CEILING.
   c. WALL MOUNTED STROBE OR SPEAKER/STROBE: BETWEEN 80" TO BOTTOM OF DEVICE LENS TO +96" TO TOP OF DEVICE LENS ABOVE FINISH FLOOR, BUT NOT LESS THAN 6" FROM CEILING.
   d. CONTROL PANELS / ANNUNCIATORS: 48" TO BOTTOM OF EQUIPMENT.
5. AUDIBLE FIRE ALARM SYSTEM LEVEL SHALL BE AT LEAST 15dBA ABOVE THE AVERAGE AMBIENT SOUND LEVEL IN ALL OCCUPIABLE AREAS, OR 5 dBA ABOVE THE MAXIMUM SOUND LEVEL HAVING A DURATION OF AT LEAST 60 SECONDS, WHICHEVER IS GREATER, MEASURED AT 5 FEET ABOVE THE FLOOR. AUDIBLE SIGNALS SHALL NOT BE LESS THAN 75dBA AT 10 FEET, OR MORE THAN 110dBA AT THE MINIMUM HEARING DISTANCE.
6. AUDIBLE DEVICES SHALL BE SYNCHRONIZED TEMPORAL THREE DISTINCTIVE FIRE ALARM SOUND PER NFPA 72.
7. APPLICABLE CODES:
   a. CBC 2019; CEC 2019; CMC 2019; CFC 2019.
   b. STATE FIRE MARSHAL TITLE 19, PUBLIC SAFETY.
   c. NFPA 72, 2016 EDITION W/CA AMENDMENTS, FIRE ALARM CODE.
8. STROBES SHALL FLASH AT A RATE NOT EXCEEDING TWO FLASHES PER SECOND, AND NOT LESS THAN ONE FLASH EVERY SECOND. THE DEVICE SHALL HAVE A PULSING LIGHT SOURCE NOT LESS THAN 15 CANDELA. VISUAL DEVICES WITHIN 55 FEET OF EACH OTHER SHALL BE SYNCHRONIZED.
9. FIRE ALARM CONTRACTOR SHALL PROVIDE A COPY OF NFPA 72 SYSTEM RECORD OF COMPLETION, SYSTEM RECORD OF INSPECTION AND TESTING, AND THE "EMERGENCY COMMUNICATIONS SUPPLEMENTARY RECORD OF COMPLETION", TO THE INSPECTOR OF RECORD IOR/DSA, SCHOOL DISTRICT, ARCHITECT AND LOCAL FIRE AUTHORITY.
10. POWER SERVICE TO THE FACP, REMOTE POWER SUPPLIES, AND CENTRAL STATION AUTO DIALER SHALL BE ON A DEDICATED BRANCH CIRCUIT WITH A RED MARKING AND IDENTIFIED AS "FIRE ALARM CIRCUIT CONTROL".
11. INSTALL ALL WIRING IN CONDUIT, MIN. 3/4" CONDUIT. ALL FIRE ALARM SYSTEM WIRING SHALL BE FPL (FIRE POWER LIMITED) OR FPLP (FIRE POWER LIMITED PLENUM RATED) AS REQUIRED FOR APPLICATION. WIRING IN CONDUIT ABOVE GROUND MAY BE THHN OR THWN.
12. CONDUIT AND WIRING SHALL BE PER MANUFACTURERS REQUIREMENTS.
13. ALL FIRE ALARM COMPONENTS SHALL BE SECURED TO MOUNTING SURFACES PER MANUFACTURERS SPECIFICATIONS. NO SINGLE DEVICES/EQPT. SHALL EXCEED 20LBS. WITHOUT SPECIAL MOUNTING DETAILS.
14. INSTALLATION OF SYSTEM SHALL NOT BE STARTED UNTIL COMPLETE SET OF CONSTRUCTION DOCUMENTS (WITH DEVICE TYPES AND LISTINGS) HAVE BEEN REVIEWED AND APPROVED BY DSA.
15. A STAMPED SET OF APPROVED PLANS SHALL BE ON THE JOB SITE AT ALL TIMES AND SHALL BE USED FOR INSTALLATION.
16. ANY DISCREPANCIES BETWEEN THE CONTRACT DOCUMENTS AND CODE OR RECOGNIZED STANDARDS SHALL BE BROUGHT TO THE ATTENTION OF DSA AND ARCHITECT/ENGINEER OF RECORD.
17. THE CONTRACTOR SHALL INSTALL AND ADJUST ALL DEVICES TO MAXIMIZE PERFORMANCE AND TO MINIMIZE FALSE ALARMS.
18. SMOKE DETECTORS SHALL NOT BE ANY CLOSER THAN 1 FOOT FROM FIRE SPRINKLER HEADS OR 3 FEET FROM ANY SUPPLY DIFFUSER. IN AREAS OF CONSTRUCTION OR POSSIBLE DAMAGE /CONTAMINATION, INSTALLED DEVICES SHALL BE COVERED UNTIL AREA IS READY TO BE TURNED OVER TO THE OWNER.
19. PER CEC STANDARDS, ALL WIRING IS TO BE PULLED THROUGH EACH JUNCTION BOX AND CONNECTED DIRECTLY TO EACH FIRE ALARM DEVICE. DO NOT SPLICE WIRE. THERE MUST BE AT LEAST 6" OF WIRE LEAD FROM THE BOX TO THE DEVICE. ALL BOXES TO BE SIZED PER CEC FOR PROPER VOLUME WITH INSTALLED WIRING AND DEVICES.
20. SUPERVISING STATION: AUTOMATIC FIRE ALARM SYSTEMS SHALL TRANSMIT THE ALARM, SUPERVISORY AND TROUBLE SIGNALS TO AN APPROVED SUPERVISING STATION AS REQUIRED BY NFPA 72, AS AMENDED BY CFC CHAPTER 80. THE SUPERVISION STATION SHALL BE LISTED AS EITHER UUFX OR UUJS BY UNDERWRITERS LABORATORY OR SHALL MEET THE REQUIREMENTS OF FACTORY MUTUAL RESEARCH APPROVAL STANDARD 3011.
21. A DOCUMENTATION CABINET SHALL BE INSTALLED ADJACENT TO THE FACP IN THE MAIN ELECTRICAL ROOM (NFPA 72, 7.7.2.1). SPACE AGE ELECTRONICS INC, ACERBOX FAD SERIES (#SSU00685 OR EQUAL).
22. ALL RECORD DOCUMENTATION SHALL BE STORED IN THE DOCUMENTATION CABINET (NFPA 72, 7.7.2.3); PROVIDE NAMEPLATE "FIRE ALARM SYSTEM RECORD DOCUMENTS" (NFPA 72, 7.7.2.5).
23. FIRE ALARM MANUAL PULLSTATIONS SHALL BE INSTALLED IN ACCORDANCE WITH NFPA 72 17.14.5 AND SHALL MEET THE CALIFORNIA ACCESSIBILITY REQUIREMENTS OUTLINED IN THE CBC ("CONTROLS AND OPERATING MECHANISMS SHALL BE OPERABLE WITH ONE HAND AND NOT REQUIRE TIGHT GRASPING, PINCHING OR TWISTING OF THE WRIST. THE FORCE TO ACTIVATE THE CONTROLS SHALL BE NO GREATER THAN 5 POUNDS OF FORCE". REFER TO DSA ACCESSIBILITY STAFF FOR QUESTIONS OR CLARIFICATION.)
24. EXISTING CO DETECTION ALARM DOES NOT SEND GENERAL ALARM OR DIAL OUT. PROVIDES A TEMPORAL SOUND AT LOCAL SITE OF CO DETECTION & A TROUBLE NOTICE ON ANNUNCIATOR PANEL.

FIRE ALARM EQUIPMENT LIST

SYMBOL	DESCRIPTION	MANUFACTURER & MODEL NUMBER	CSFM LISTING NUMBER	STANDBY CURRENT	ALARM CURRENT
FACP	FIRE ALARM CONTROL PANEL	NOTIFIER NFS2-3030	7165-0028:0224	290mA	650mA
FAEP	FIRE ALARM EXPANDER PANEL	NOTIFIER ACPS-610 W/ CAB-PS1 CABINET	7135-0028:0248	150mA	90mA
FAVEP	DIGITAL AUDIO AMPLIFIER W/ REMOTE MICROPHONE AND FIBER MODULE	NOTIFIER DAA2-5025	7300-0028:0515	372mA	681mA
M	ADDRESSABLE MONITOR MODULE	NOTIFIER FMM-1	7300-0028:0219	0.36mA	6.5mA
C R	ADDRESSABLE CONTROL / RELAY MODULE	NOTIFIER FCM-1 / FRM-1	7300-0028:0219	0.36mA	6.5mA
S	ADDRESSABLE PHOTOELECTRIC SMOKE DETECTOR	NOTIFIER FSP-951	7272-0028:0206	0.36mA	6.5mA
H	ADDRESSABLE FIX TEMPERATURE HEAT DETECTOR (135F)	NOTIFIER FST-951	7270-0028:0502	0.36mA	6.5mA
	DETECTOR BASE	NOTIFIER B300	7300-1635:0109	0.36mA	6.5mA
F	ADDRESSABLE PULL STATION	NOTIFIER NBG-12LX	-	0.36mA	0.36mA
S	VISUAL STROBE, WALL MOUNT, SELECTABLE CANDELA UL 1971 PUBLIC MODE NOTIFICATION	SYSTEM SENSOR SRL	7125-1653:0504		
			15cd	0mA	43mA
			30cd	0mA	63mA
			75cd	0mA	107mA
			110cd	0mA	148mA
S	VISUAL STROBE, CEILING MOUNT, SELECTABLE CANDELA UL 1971 PUBLIC MODE NOTIFICATION	SYSTEM SENSOR SCRL	7125-1653:0504		
			15cd	0mA	41mA
			30cd	0mA	63mA
			75cd	0mA	111mA
			115cd	0mA	158mA
V	COMBINATION VISUAL STROBE AND SPEAKER (1W TAP), WALL MOUNT, SELECTABLE CANDELA UL 1971 PUBLIC MODE NOTIFICATION	SYSTEM SENSOR SPSRL	7320-1653:0505		
			15cd	0mA	43mA
			30cd	0mA	63mA
			75cd	0mA	107mA
			110cd	0mA	148mA
V	COMBINATION VISUAL STROBE AND SPEAKER (1W TAP), CEILING MOUNT, SELECTABLE CANDELA UL 1971 PUBLIC MODE NOTIFICATION	SYSTEM SENSOR SPSCRL	7320-1653:0505		
			15cd	0mA	41mA
			30cd	0mA	63mA
			75cd	0mA	111mA
			115cd	0mA	158mA
S	AUDIBLE SPEAKER (1W), WALL MOUNT	SYSTEM SENSOR SPRL	7320-1653:0505	-	-
S	AUDIBLE SPEAKER (1W), CEILING MOUNT	SYSTEM SENSOR SPCRL	7320-1653:0505	-	-
WP V	OUTDOOR RATED, COMBINATION VISUAL STROBE AND SPEAKER (1W TAP), WALL MOUNT, SELECTABLE CANDELA UL 1971 PUBLIC MODE NOTIFICATION	SYSTEM SENSOR SPSRK	7320-1653:0201		
			15cd	0mA	66mA
			30cd	0mA	94mA
			75cd	0mA	158mA
			110cd	0mA	202mA
WP S	OUTDOOR RATED, AUDIBLE SPEAKER (1W), WALL MOUNT	SYSTEM SENSOR SPRK	7320-1653:0201	-	-
	DOCUMENT CABINET (LOCATE BELOW/ADJACENT 'FACP')	SPACE AGE SRD ACE-11	7300-0553:0110	-	-

NOTICE TO CONTRACTORS:

THE SYSTEM DESIGN IS BASED ON THE PRODUCTS SHOWN ON THIS FIRE ALARM EQUIPMENT LIST AND HAS BEEN APPROVED BY DSA AS SUCH. DEVIATIONS FROM THE APPROVED DESIGN (FOR MANUFACTURER OR DEVICE LAYOUTS) MAY BE ALLOWED WITH THE APPROVAL BY THE ARCHITECT. HOWEVER, IT SHALL BE THE CONTRACTOR'S RESPONSIBILITY TO REDESIGN AND RESUBMIT THE PLANS TO DSA FOR RE-APPROVAL.

DETECTOR SUBSCRIPT LEGEND:

"c" - DETECTOR TO BE LOCATED WITHIN ACCESSIBLE CEILING SPACE
"p" - DETECTOR TO BE LOCATED WITHIN 36" OF CEILING PEAK

FIRE ALARM WIRING LEGEND

TAG	DESCRIPTION	CABLING
A	INITIATION CIRCUIT	(2) #16 TWISTED/UNSHIELDED - WESTPENN 990S (OR WESTPENN AQC225 (WET))
B	STROBE NOTIFICATION CIRCUIT(S)	(2) #12 THHN/THWN
C	SPEAKER NOTIFICATION CIRCUIT(S)	(2) #16 SHIELDED SPKR CABLE - WESTPENN 991 (OR WESTPENN AQC294 (WET))
D	24V AUX POWER CIRCUIT	(2) #14 TWISTED/UNSHIELDED - WESTPENN 994S (OR WESTPENN AQC226 (WET))
E	REMOTE AUDIO AMPLIFIER WIRING	(2) #18 TWISTED/SHIELDED - WESTPENN AQC293 (2) #18 TWISTED/UNSHIELDED - WESTPENN AQC225
F	FIBER COMMUNICATIONS	6-STRAND (OS2, OSP), SINGLE-MODE FIBER

NOTE:
CONTRACTOR SHALL VERIFY EXACT CABLE/WIRE TYPES WITH SYSTEM MANUFACTURER PRIOR TO ROUGH-IN. INSTALL WIRING IN 3/4" CONDUIT MIN.

IDENTIFICATION STAMP
DIV. OF THE STATE ARCHITECT
APP: 01-119994 INC:
REVIEWED FOR
SS ☑ FLS ☑ ACS ☑
DATE: 08/16/2022

QUATTROCCHI KWOK ARCHITECTS
Main:
636 Fifth Street, Santa Rosa, CA 95404
East Bay:
55 Harrison Street, Suite 525,
Oakland, CA 94607
(707) 576-0829

O'MAHONY & MYER
ELECTRICAL ENGINEERING & LIGHTING DESIGN
4340 REDWOOD HWY., SUITE 245
SAN RAFAEL, CALIFORNIA 94903
(415) 492-0420 FAX (415) 479-9662
REGISTERED PROFESSIONAL ENGINEER
JUSTIN J. COLEMAN
No. 14738
Exp. 6/23
ELECTRICAL
STATE OF CALIFORNIA

LIBERTY HIGH SCHOOL

NEW CLASSROOM BUILDING

850 2ND STREET
BRENTWOOD, CA
94513

LIBERTY UNION HIGH SCHOOL DISTRICT

DSA APP NO. 01-119994
ARCH PROJECT NO: 1719.00
DRAWN BY: Author
DRAWING SCALE: AS NOTED
PTN: 61721-83 FILE NO: 7-H4
CONSTRUCTION DOCUMENTS
JUNE 24, 2022

SHEET TITLE
FIRE ALARM EQUIPMENT LIST, GENERAL NOTES, & DETAILS

SHEET NUMBER
FE-0.1

LIBERTY HS NEW CLASSROOM BUILDINGS - 221060 R20

SHEET NUMBERED NOTES

1 HEAT DETECTOR SHALL BE LOCATED IN MECHANICAL DUCT SOFFIT. CO-LOCATE WITH ARCHITECTURAL ACCESS DOOR. COORDINATE LOCATIONS PRIOR TO ROUGH-IN.

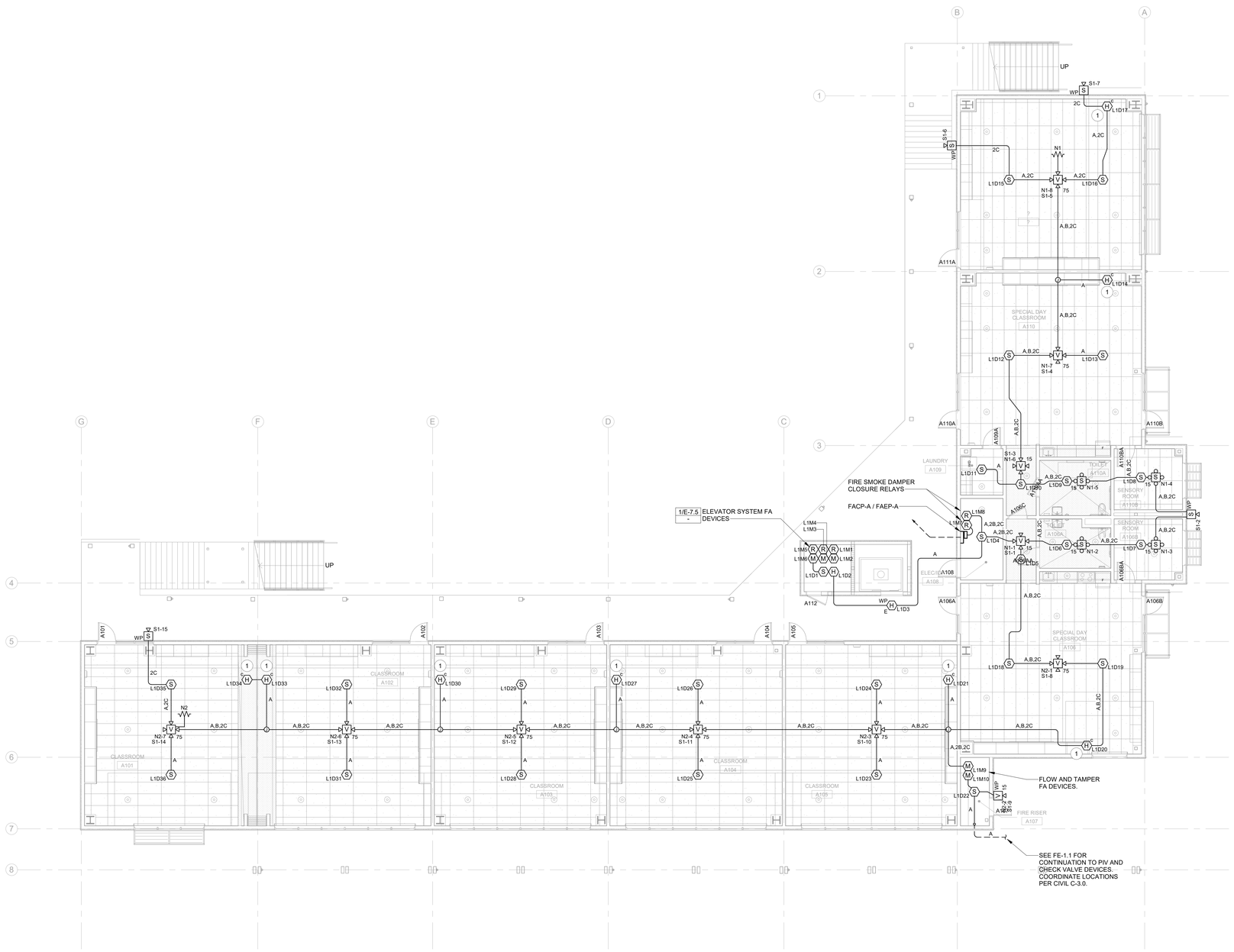

1 FIRST FLOOR PLAN - BLDG A - FIRE ALARM
1/8" = 1'-0"

IDENTIFICATION STAMP
DIV. OF THE STATE ARCHITECT
APP: 01-119994 INC:
REVIEWED FOR
SS ☑ FLS ☑ ACS ☑
DATE: 08/16/2022

QUATTROCCHI KWOK ARCHITECTS
Main:
636 Fifth Street, Santa Rosa, CA 95404
East Bay:
55 Harrison Street, Suite 525,
Oakland, CA 94607
(707) 576-0829

O'MAHONY & MYER
ELECTRICAL ENGINEERING & LIGHTING DESIGN
4340 REDWOOD HWY., SUITE 245
SAN RAFAEL, CALIFORNIA 94903
(415) 492-0420 FAX (415) 479-9662
REGISTERED PROFESSIONAL ENGINEER
JOHN J. COLENBRANDER
No. 14738
Exp. 6/23
ELECTRICAL
STATE OF CALIFORNIA

LIBERTY HIGH SCHOOL

NEW CLASSROOM BUILDING

850 2ND STREET
BRENTWOOD, CA
94513

LIBERTY UNION HIGH SCHOOL DISTRICT

DSA APP NO. 01-119994

ARCH PROJECT NO:	1719.00
DRAWN BY:	Author
DRAWING SCALE:	AS NOTED
PTN: 61721-83	FILE NO: 7-H4

CONSTRUCTION DOCUMENTS

JUNE 24, 2022

SHEET TITLE

FIRST FLOOR PLAN BLDG. A FIRE ALARM

SHEET NUMBER

FE-A-3.1

LIBERTY HS NEW CLASSROOM BUILDINGS - 221060 R20

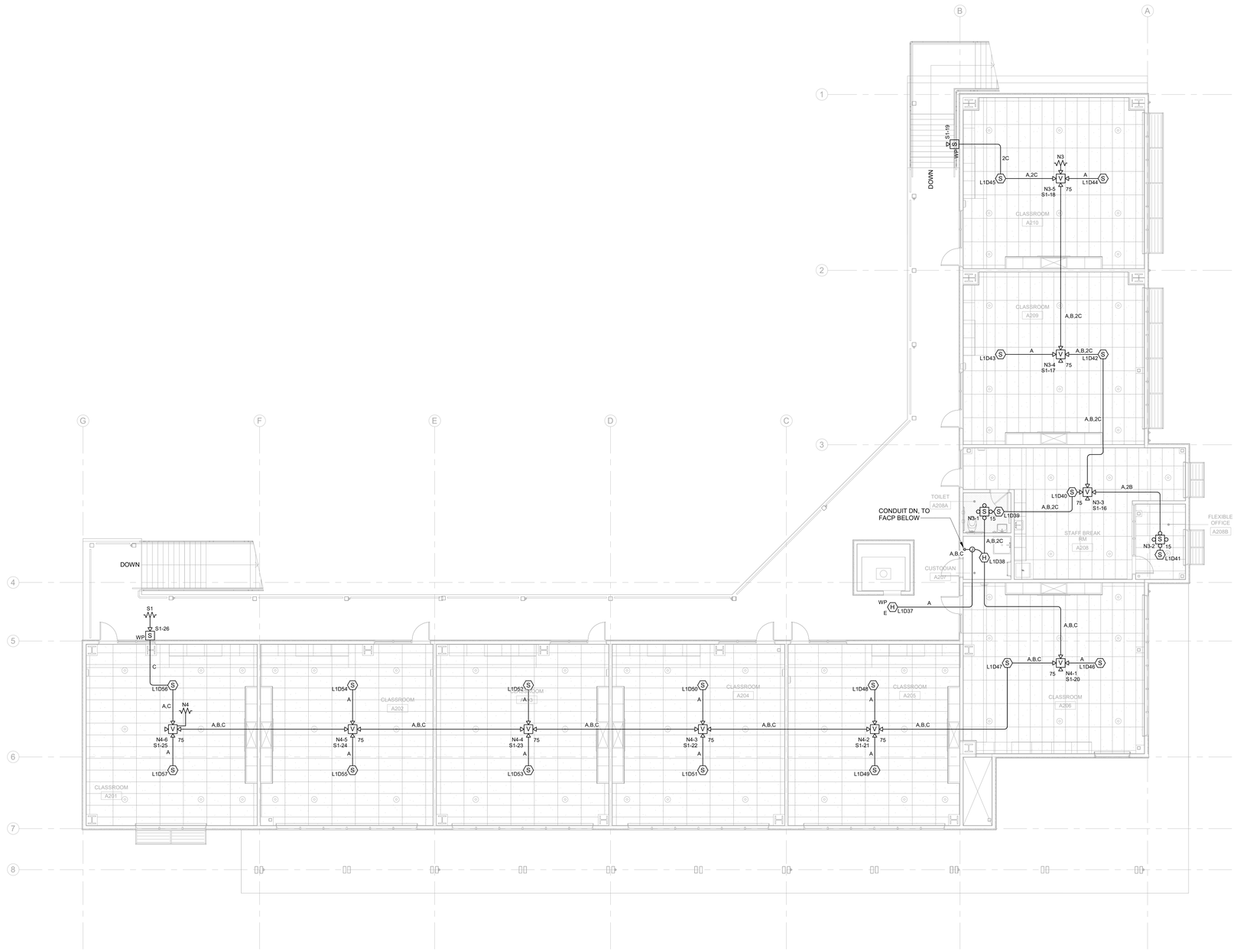

1 SECOND FLOOR PLAN - BLDG A - FIRE ALARM
1/8" = 1'-0"

IDENTIFICATION STAMP
DIV. OF THE STATE ARCHITECT
APP: 01-119994 INC:
REVIEWED FOR
SS ☑ FLS ☑ ACS ☑
DATE: 08/16/2022

QUATTROCCHI KWOK
ARCHITECTS

Main:
636 Fifth Street, Santa Rosa, CA 95404
East Bay:
55 Harrison Street, Suite 525,
Oakland, CA 94607
(707) 576-0829

O'MAHONY & MYER
ELECTRICAL ENGINEERING & LIGHTING DESIGN

4340 REDWOOD HWY. SUITE 245
SAN RAFAEL, CALIFORNIA 94903
(415) 492-0420 FAX (415) 479-9662

REGISTERED PROFESSIONAL ENGINEER
JOHN J. COLENBRANDER
No. 14738
Exp. 6/23
ELECTRICAL
STATE OF CALIFORNIA

LIBERTY HIGH SCHOOL

NEW CLASSROOM BUILDING

850 2ND STREET
BRENTWOOD, CA
94513

LIBERTY UNION
HIGH SCHOOL
DISTRICT

DSA APP NO. 01-119994

ARCH PROJECT NO:	1719.00
DRAWN BY:	Author
DRAWING SCALE:	AS NOTED
PTN: 61721-83	FILE NO: 7-H4

CONSTRUCTION DOCUMENTS

JUNE 24, 2022

SHEET TITLE

SECOND FLOOR PLAN BLDG. A FIRE ALARM

SHEET NUMBER

FE-A-3.2

LIBERTY HS NEW CLASSROOM BUILDINGS - 221060 R20

CEILING SLOPE IS LESS THAN 1:8, LEVEL CEILING CONDITIONS APPLY FOR SMOKE DETECTION.

BEAM DEPTH IS GREATER THAN 10% OF AVG. CEILING HEIGHT, AND BEAM SPACING IS GREATER THAN 40% OF AVG. CEILING HEIGHT. DETECTORS SHALL BE LOCATED IN BEAM POCKETS.

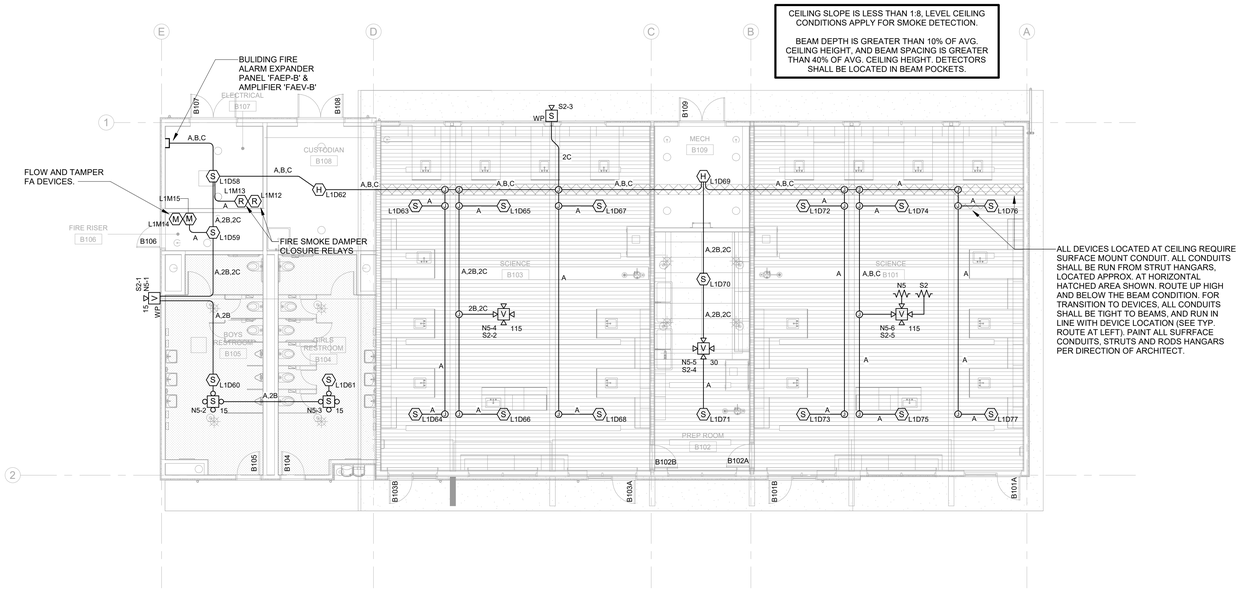

ALL DEVICES LOCATED AT CEILING REQUIRE SURFACE MOUNT CONDUIT. ALL CONDUITS SHALL BE RUN FROM STRUT HANGARS, LOCATED APPROX. AT HORIZONTAL HATCHED AREA SHOWN. ROUTE UP HIGH AND BELOW THE BEAM CONDITION. FOR TRANSITION TO DEVICES, ALL CONDUITS SHALL BE TIGHT TO BEAMS, AND RUN IN LINE WITH DEVICE LOCATION (SEE TYP. ROUTE AT LEFT). PAINT ALL SUFRFACE CONDUITS, STRUTS AND RODS HANGARS PER DIRECTION OF ARCHITECT.

1 FLOOR PLAN - BLDG B - FIRE ALARM
1/8" = 1'-0"

IDENTIFICATION STAMP
DIV. OF THE STATE ARCHITECT
APP: 01-119994 INC:
REVIEWED FOR
SS ☑ FLS ☑ ACS ☑
DATE: 08/16/2022

QUATTROCCHI KWOK ARCHITECTS
Main:
636 Fifth Street, Santa Rosa, CA 95404
East Bay:
55 Harrison Street, Suite 525,
Oakland, CA 94607
(707) 576-0829

O'MAHONY & MYER
ELECTRICAL ENGINEERING & LIGHTING DESIGN
4340 REDWOOD HWY., SUITE 245
SAN RAFAEL, CALIFORNIA 94903
(415) 492-0420/FAX (415) 479-9662

REGISTERED PROFESSIONAL ENGINEER
PETER J. COLEBRANDER
No. 14738
Exp. 6/23
ELECTRICAL
STATE OF CALIFORNIA

LIBERTY HIGH SCHOOL

NEW CLASSROOM BUILDING

850 2ND STREET
BRENTWOOD, CA
94513

LIBERTY UNION HIGH SCHOOL DISTRICT

DSA APP NO. 01-119994

ARCH PROJECT NO:	1719.00
DRAWN BY:	Author
DRAWING SCALE:	AS NOTED
PTN: 61721-83	FILE NO: 7-H4

CONSTRUCTION DOCUMENTS

JUNE 24, 2022

SHEET TITLE

FLOOR PLAN BLDG B. FIRE ALARM

SHEET NUMBER

TRUE NORTH

FE-B-3.1

LIBERTY HS NEW CLASSROOM BUILDINGS - 221060 R20

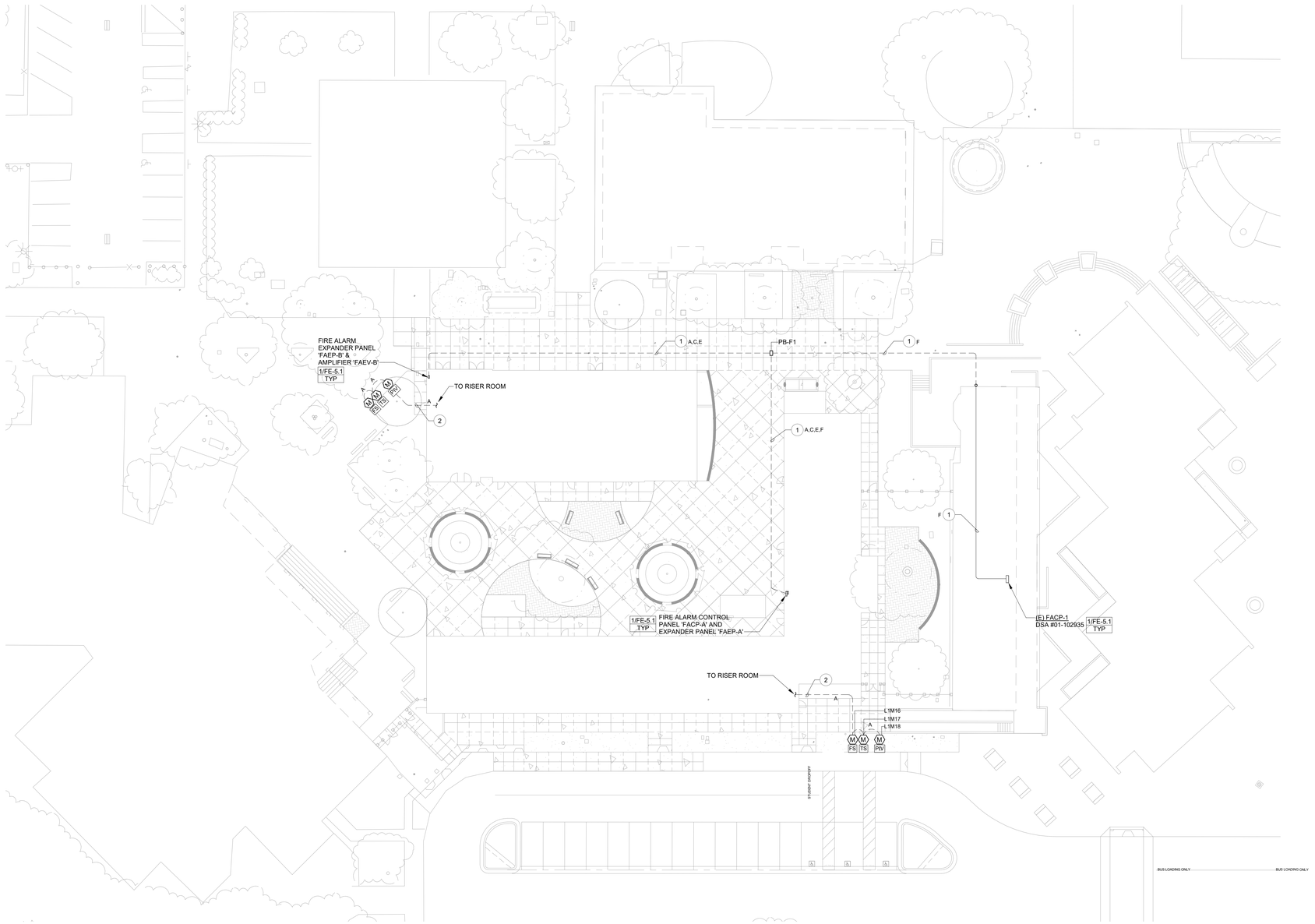

1 SITE PLAN - FIRE ALARM
1" = 20'-0"

SHEET NUMBERED NOTES

1. PROVIDE AND INSTALL FIRE ALARM WIRING SHOWN ADJACENT NOTE IN CONDUIT. REFER TO E-1.1 SITE PLAN FOR FIRE ALARM CONDUIT ROUTING AND REQUIREMENTS.
2. PROVIDE AND INSTALL FIRE ALARM WIRING SHOWN IN 1" CONDUIT. COORDINATE ROUTING WITH SHEET E-1.1.

IDENTIFICATION STAMP
DIV. OF THE STATE ARCHITECT
APP: 01-119994 INC:
REVIEWED FOR
SS ☑ FLS ☑ ACS ☑
DATE: 08/16/2022

QUATTROCCHI KWOK ARCHITECTS
Main:
636 Fifth Street, Santa Rosa, CA 95404
East Bay:
55 Harrison Street, Suite 525,
Oakland, CA 94607
(707) 576-0829

O'MAHONY & MYER
ELECTRICAL ENGINEERING & LIGHTING DESIGN
4340 REDWOOD HWY., SUITE 245
SAN RAFAEL, CALIFORNIA 94903
(415) 492-0420/FAX (415) 479-9662

REGISTERED PROFESSIONAL ENGINEER
PETER J. COLENBRANDER
No. 14738
Exp. 9/23
ELECTRICAL
STATE OF CALIFORNIA

LIBERTY HIGH SCHOOL

NEW CLASSROOM BUILDING

850 2ND STREET
BRENTWOOD, CA
94513

LIBERTY UNION HIGH SCHOOL DISTRICT

DSA APP NO. 01-119994

ARCH PROJECT NO:	1719.00
DRAWN BY:	Author
DRAWING SCALE:	AS NOTED
PTN: 61721-83	FILE NO: 7-H4

CONSTRUCTION DOCUMENTS

JUNE 24, 2022

SHEET TITLE

SITE PLAN - FIRE ALARM

SHEET NUMBER

FE-1.1

LIBERTY HS NEW CLASSROOM BUILDINGS - 221060 R20

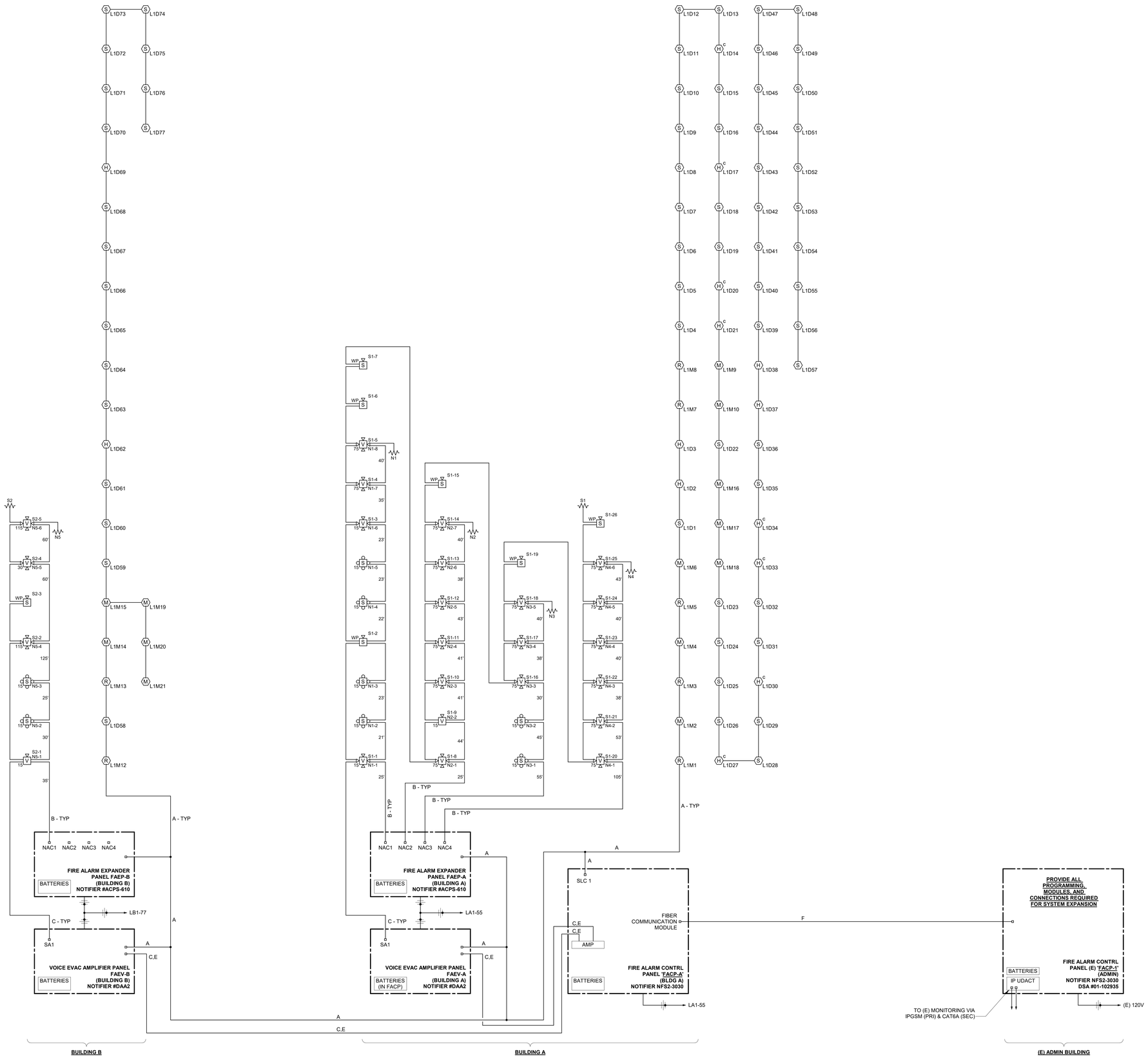

1 FIRE ALARM RISER DIAGRAM
NONE

IDENTIFICATION STAMP
DIV. OF THE STATE ARCHITECT
APP: 01-119994 INC:
REVIEWED FOR
SS ☑ FLS ☑ ACS ☑
DATE: 08/16/2022

QUATTROCCHI KWOK ARCHITECTS
Main:
636 Fifth Street, Santa Rosa, CA 95404
East Bay:
55 Harrison Street, Suite 525,
Oakland, CA 94607
(707) 576-0829

O'MAHONY & MYER
ELECTRICAL ENGINEERING & LIGHTING DESIGN
4340 REDWOOD HWY., SUITE 245
SAN RAFAEL, CALIFORNIA 94903
(415) 492-0420/FAX (415) 479-9662

REGISTERED PROFESSIONAL ENGINEER
PETER J. COLEMBRANDER
No. 14738
Exp. 6/23
ELECTRICAL
STATE OF CALIFORNIA

LIBERTY HIGH SCHOOL

NEW CLASSROOM BUILDING

850 2ND STREET
BRENTWOOD, CA
94513

LIBERTY UNION HIGH SCHOOL DISTRICT

DSA APP NO. 01-119994

ARCH PROJECT NO:	1719.00
DRAWN BY:	Author
DRAWING SCALE:	AS NOTED
PTN: 61721-83	FILE NO: 7-H4

CONSTRUCTION DOCUMENTS

JUNE 24, 2022

SHEET TITLE

FIRE ALARM RISER DIAGRAM

SHEET NUMBER

FE-5.1

LIBERTY HS NEW CLASSROOM BUILDINGS - 221060 R20

VOLTAGE DROP CALCULATIONS: FAEP-B

SIGNAL CIRCUIT ID: N5
TOTAL CKT CURRENT = 0.555 A
MAX VOLT-DROP = **2.19%**
SYSTEM VOLTAGE = 20.4

Device Address->	SYNC	N5-1	N5-2	N5-3	N5-4	N5-5	N5-6												EOL
Current of Device (Amp)->	0.028	0.066	0.041	0.041	0.158	0.063	0.158												
Distance to Device (Ft)->	5	35	30	25	125	60	60												5
Size of Wire (AWG)->	#12	#12	#12	#12	#12	#12	#12	#12	#12	#12	#12	#12	#12	#12	#12	#12	#12	#12	#12
Current Total (Amp)->	0.555	0.527	0.461	0.420	0.379	0.221	0.158	0.000	0.000	0.000	0.000	0.000	0.000	0.000	0.000	0.000	0.000	0.000	0.000
Device Volt-drop->	0.05%	0.40%	0.66%	0.86%	1.76%	2.01%	2.19%	2.19%	2.19%	2.19%	2.19%	2.19%	2.19%	2.19%	2.19%	2.19%	2.19%	2.19%	2.19%
Device Volt->	20.39	20.32	20.26	20.22	20.04	19.99	19.95	19.95	19.95	19.95	19.95	19.95	19.95	19.95	19.95	19.95	19.95	19.95	19.95

BATTERY CALCULATIONS: FAEP-B

STANDBY MODE:

	EA (A)	QTY	CURRENT
FAEP CTRL UNIT:	0.15	1	0.150
TOTAL STANDBY CURRENT =			**0.150** A
REQUIRED (24 HOURS) =			**3.600** AH

ALARM MODE:

	EA (A)	QTY	CURRENT
CKT N5	0.555	1	0.555
CKT SPARE	0.028	0	0.000
CKT SPARE	0.028	0	0.000
CKT SPARE	0.028	0	0.000
FAEP CTRL UNIT:	0.175	1	0.175
TOTAL STANDBY CURRENT =			**0.730** A
REQUIRED (24 HOURS) =			**0.183** AH

TOTAL BATTERY POWER REQUIRED AT 120% = 4.539

PROVIDE TWO, 12V, 7AH BATTERIES

VOLTAGE DROP FORMULAS:

2L x I x R = **Vd**

Vd / VDC = Vd%
Vd = Max Voltage Drop (Volts DC)
L = Circuit length, one-way (ft)
I = Current (amps)
R = Resistance (ohms/1000ft)
VDC = System Battery Voltage (Volts)

CONDUCTOR RESISTANCE:

AWG		Ohms/1000ft (R)
#10	=	1.21
#12	=	1.93

NOTE: WHERE DEVICE TERMINALS ARE LISTED AT MAXIMUM #12AWG, PROVIDE WIRE NUT CONNECTION AT SPECIFIED WIRE SIZE, WITH #12 PIGTAIL CONNECTION TO TERMINALS.

1

VOLTAGE DROP CALCULATIONS:

SIGNAL CIRCUIT ID: N1
TOTAL CKT CURRENT = 0.496 A
MAX VOLT-DROP = **1.23%**
SYSTEM VOLTAGE = 20.4

Device Address->	SYNC	N1-1	N1-2	N1-3	N1-4	N1-5	N1-6	N1-7	N1-8										EOL
Current of Device (Amp)->	0.028	0.041	0.041	0.041	0.041	0.041	0.041	0.111	0.111										
Distance to Device (Ft)->	5	25	21	23	22	23	23	35	40										5
Size of Wire (AWG)->	#12	#12	#12	#12	#12	#12	#12	#12	#12	#12	#12	#12	#12	#12	#12	#12	#12	#12	#12
Current Total (Amp)->	0.496	0.468	0.427	0.386	0.345	0.304	0.263	0.222	0.111	0.000	0.000	0.000	0.000	0.000	0.000	0.000	0.000	0.000	0.000
Device Volt-drop->	0.05%	0.27%	0.44%	0.61%	0.75%	0.88%	1.00%	1.14%	1.23%	1.23%	1.23%	1.23%	1.23%	1.23%	1.23%	1.23%	1.23%	1.23%	1.23%
Device Volt->	20.39	20.35	20.31	20.28	20.25	20.22	20.20	20.17	20.15	20.15	20.15	20.15	20.15	20.15	20.15	20.15	20.15	20.15	20.15

SIGNAL CIRCUIT ID: N2
TOTAL CKT CURRENT = 0.760 A
MAX VOLT-DROP = **2.22%**
SYSTEM VOLTAGE = 20.4

Device Address->	SYNC	N2-1	N2-2	N2-3	N2-4	N2-5	N2-6	N2-7											EOL
Current of Device (Amp)->	0.028	0.111	0.066	0.111	0.111	0.111	0.111	0.111											
Distance to Device (Ft)->	5	25	44	41	41	43	38	40											5
Size of Wire (AWG)->	#12	#12	#12	#12	#12	#12	#12	#12	#12	#12	#12	#12	#12	#12	#12	#12	#12	#12	#12
Current Total (Amp)->	0.760	0.732	0.621	0.555	0.444	0.333	0.222	0.111	0.000	0.000	0.000	0.000	0.000	0.000	0.000	0.000	0.000	0.000	0.000
Device Volt-drop->	0.07%	0.42%	0.94%	1.37%	1.71%	1.98%	2.14%	2.22%	2.22%	2.22%	2.22%	2.22%	2.22%	2.22%	2.22%	2.22%	2.22%	2.22%	2.22%
Device Volt->	20.39	20.31	20.21	20.12	20.05	20.00	19.96	19.95	19.95	19.95	19.95	19.95	19.95	19.95	19.95	19.95	19.95	19.95	19.95

SIGNAL CIRCUIT ID: N3
TOTAL CKT CURRENT = 0.443 A
MAX VOLT-DROP = **1.22%**
SYSTEM VOLTAGE = 20.4

Device Address->	SYNC	N3-1	N3-2	N3-3	N3-4	N3-5													EOL
Current of Device (Amp)->	0.028	0.041	0.041	0.111	0.111	0.111													
Distance to Device (Ft)->	5	55	45	30	38	40													5
Size of Wire (AWG)->	#12	#12	#12	#12	#12	#12	#12	#12	#12	#12	#12	#12	#12	#12	#12	#12	#12	#12	#12
Current Total (Amp)->	0.443	0.415	0.374	0.333	0.222	0.111	0.000	0.000	0.000	0.000	0.000	0.000	0.000	0.000	0.000	0.000	0.000	0.000	0.000
Device Volt-drop->	0.04%	0.47%	0.79%	0.98%	1.14%	1.22%	1.22%	1.22%	1.22%	1.22%	1.22%	1.22%	1.22%	1.22%	1.22%	1.22%	1.22%	1.22%	1.22%
Device Volt->	20.39	20.30	20.24	20.20	20.17	20.15	20.15	20.15	20.15	20.15	20.15	20.15	20.15	20.15	20.15	20.15	20.15	20.15	20.15

SIGNAL CIRCUIT ID: N4
TOTAL CKT CURRENT = 0.694 A
MAX VOLT-DROP = **2.78%**
SYSTEM VOLTAGE = 20.4

Device Address->	SYNC	N4-1	N4-2	N4-3	N4-4	N4-5	N4-6												EOL
Current of Device (Amp)->	0.028	0.111	0.111	0.111	0.111	0.111	0.111												
Distance to Device (Ft)->	5	105	53	38	40	40	43												5
Size of Wire (AWG)->	#12	#12	#12	#12	#12	#12	#12	#12	#12	#12	#12	#12	#12	#12	#12	#12	#12	#12	#12
Current Total (Amp)->	0.694	0.666	0.555	0.444	0.333	0.222	0.111	0.000	0.000	0.000	0.000	0.000	0.000	0.000	0.000	0.000	0.000	0.000	0.000
Device Volt-drop->	0.07%	1.39%	1.95%	2.26%	2.52%	2.68%	2.78%	2.78%	2.78%	2.78%	2.78%	2.78%	2.78%	2.78%	2.78%	2.78%	2.78%	2.78%	2.78%
Device Volt->	20.39	20.12	20.00	19.94	19.89	19.85	19.83	19.83	19.83	19.83	19.83	19.83	19.83	19.83	19.83	19.83	19.83	19.83	19.83

BATTERY CALCULATIONS: FAEP-A

STANDBY MODE:

	EA (A)	QTY	CURRENT
FAEP CTRL UNIT:	0.075	1	0.075
TOTAL STANDBY CURRENT =			**0.075** A
REQUIRED (24 HOURS) =			**1.800** AH

ALARM MODE:

	EA (A)	QTY	CURRENT
CKT N1	0.496	1	0.496
CKT N2	0.760	1	0.760
CKT N3	0.443	1	0.443
CKT N4	0.694	1	0.694
FAEP CTRL UNIT:	0.175	1	0.175
TOTAL STANDBY CURRENT =			**2.568** A
REQUIRED (24 HOURS) =			**0.642** AH

TOTAL BATTERY POWER REQUIRED AT 120% = 2.930

PROVIDE TWO, 12V, 7AH BATTERIES

VOLTAGE DROP FORMULAS:

2L x I x R = **Vd**

Vd / VDC = Vd%
Vd = Max Voltage Drop (Volts DC)
L = Circuit length, one-way (ft)
I = Current (amps)
R = Resistance (ohms/1000ft)
VDC = System Battery Voltage (Volts)

CONDUCTOR RESISTANCE: NEC CHAPTER 9, TABLE 8, CONDUCTOR PROPERT

AWG		Ohms/1000ft (R)
#10	=	1.21
#12	=	1.93

NOTE: WHERE DEVICE TERMINALS ARE LISTED AT MAXIMUM #12AWG, PROVIDE WIRE NUT CONNECTION AT SPECIFIED WIRE SIZE, WITH #12 PIGTAIL CONNECTION TO TERMINALS.

1

BATTERY CALCULATIONS: FACP-A (NFS2-3030)

STANDBY MODE

	EA (A)	QTY.	CURRENT
CONTROL UNIT	0.1500	1	0.150
DETECTORS	0.0004	77	0.031
MODULES	0.0004	17	0.006
PRIMARY AMPLIFIER	0.3720	1	0.372
SECONDARY AMPLIFIER	0.3720	1	0.372

TOTAL STANDBY CURRENT = 0.931 A
REQUIRED (24 HOURS) = 22.350 AH

ALARM MODE

	EA (A)	QTY.	CURRENT
CONTROL UNIT	0.2750	1	0.275
DETECTORS	0.0065	77	0.501
MODULES	0.0065	17	0.111
AMPLIFIER	0.6810	1	0.681

TOTAL ALARM CURRENT = 0.886 A
REQUIRED (15 MIN) = 0.222 AH

TOTAL POWER REQUIRED WITH 120%
BATTERY DERATING FACTOR = 27.086 AH

PROVIDE TWO 12V, 12AH 50AH BATTERIES

BATTERY CALCULATIONS: FAEV-B

STANDBY MODE

	EA (A)	QTY.	CURRENT
CONTROL UNIT	0.1500	1	0.150
PRIMARY AMPLIFIER	0.3720	1	0.372
SECONDARY AMPLIFIER	0.3720	1	0.372

TOTAL STANDBY CURRENT = 0.894 A
REQUIRED (24 HOURS) = 21.456 AH

ALARM MODE

	EA (A)	QTY.	CURRENT
CONTROL UNIT	0.2750	1	0.275
AMPLIFIER	0.6810	1	0.681

TOTAL ALARM CURRENT = 0.275 A
REQUIRED (15 MIN) = 0.069 AH

TOTAL POWER REQUIRED WITH 120%
BATTERY DERATING FACTOR = 25.830 AH

PROVIDE TWO 12V, 12AH 50AH BATTERIES

IDENTIFICATION STAMP
DIV. OF THE STATE ARCHITECT
APP: 01-119994 INC:
REVIEWED FOR
SS ☑ FLS ☑ ACS ☑
DATE: 08/16/2022

QUATTROCCHI KWOK ARCHITECTS
Main:
636 Fifth Street, Santa Rosa, CA 95404
East Bay:
55 Harrison Street, Suite 525,
Oakland, CA 94607
(707) 576-0829

O'MAHONY & MYER
ELECTRICAL ENGINEERING & LIGHTING DESIGN
4340 REDWOOD HWY., SUITE 245
SAN RAFAEL, CALIFORNIA 94903
(415) 492-0420 FAX (415) 479-9662

REGISTERED PROFESSIONAL ENGINEER
ERIC J. COLEMAN
No. 14738
Exp. 6/23
ELECTRICAL
STATE OF CALIFORNIA

LIBERTY HIGH SCHOOL

NEW CLASSROOM BUILDING

850 2ND STREET
BRENTWOOD, CA
94513

LIBERTY UNION HIGH SCHOOL DISTRICT

DSA APP NO. 01-119994
ARCH PROJECT NO: 1719.00
DRAWN BY: Author
DRAWING SCALE: AS NOTED
PTN: 61721-83 FILE NO: 7-H4
CONSTRUCTION DOCUMENTS
JUNE 24, 2022

SHEET TITLE
FIRE ALARM CALCULATIONS

SHEET NUMBER
FE-6.1

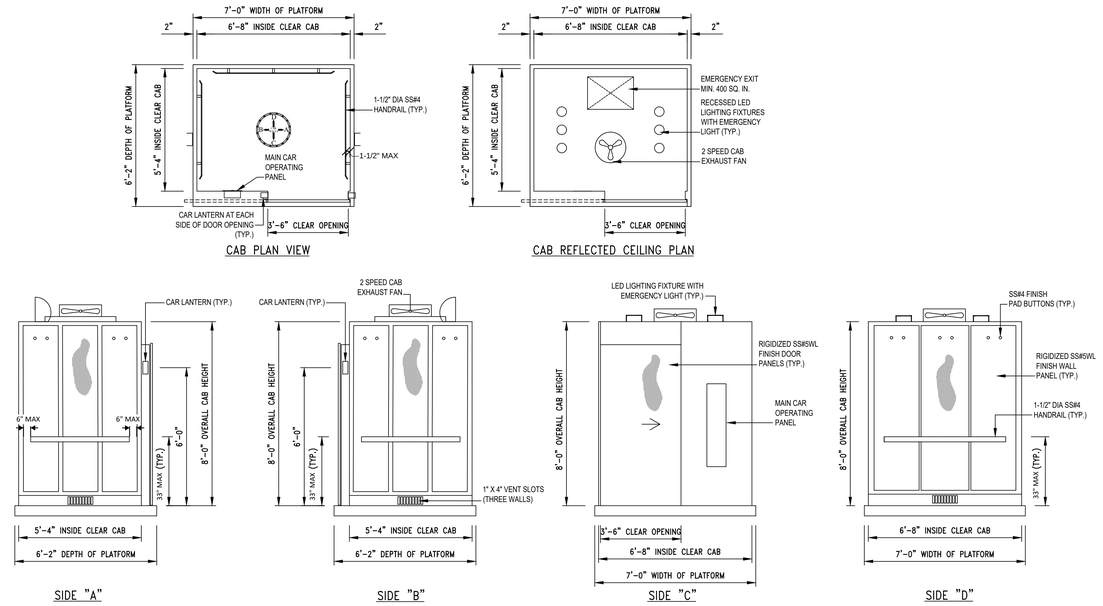

4 ENTRANCE & CAB DETAILS

SCALE: N.T.S.

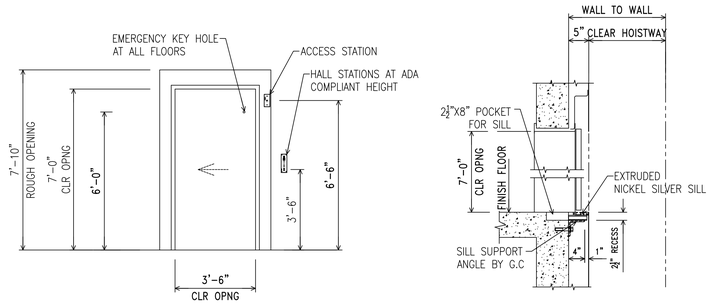

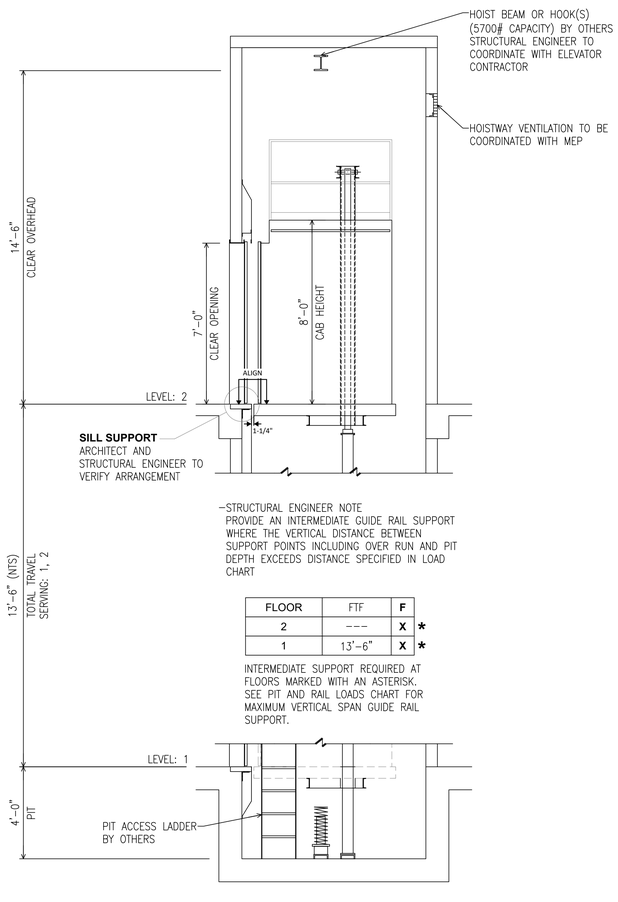

-STRUCTURAL ENGINEER NOTE
PROVIDE AN INTERMEDIATE GUIDE RAIL SUPPORT WHERE THE VERTICAL DISTANCE BETWEEN SUPPORT POINTS INCLUDING OVER RUN AND PIT DEPTH EXCEEDS DISTANCE SPECIFIED IN LOAD CHART

FLOOR	FTF	F	
2	---	X	*
1	13'-6"	X	*

INTERMEDIATE SUPPORT REQUIRED AT FLOORS MARKED WITH AN ASTERISK. SEE PIT AND RAIL LOADS CHART FOR MAXIMUM VERTICAL SPAN GUIDE RAIL SUPPORT.

3 HOISTWAY SECTION

SCALE: 3/8"=1'-0"

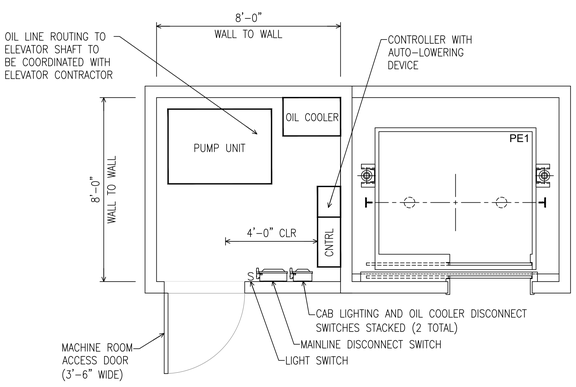

2 LEVEL 1 - ADJACENT MACHINE ROOM PLAN

SCALE: 3/8"=1'-0"

POWER AND VENTILATION / UNIT

POWER BASED ON: 460V 3-PHASE-60 HERTZ

MOTOR HP	FULL LOAD RUNNING AMPS	FULL LOAD ACCEL. AMPS	HEAT RELEASE BTU/HR/UNIT
50	93	195	33500

LOADS SHOWN ARE ESTIMATED. COORDINATE FINAL LOADS WITH ELEVATOR MANUFACTURER

HYDRAULIC MACHINE ROOM NOTES:

1. AIR CONDITIONING EQUIPMENT SHALL NOT BE LOCATED DIRECTLY ABOVE ELEVATOR EQUIPMENT. COORDINATE FINAL LOCATION OF AC EQUIPMENT WITH THE ELEVATOR SHOP DRAWINGS.
2. PROVIDE SELF CLOSING, SELF LOCKING, FIRE RATED MACHINE ROOM DOOR PER CODE.
3. MINIMUM 200 LUX MEASURED AT MACHINE ROOM FLOOR REQUIRED.
4. MAINTAIN 7'-0" CLEAR HEIGHT THROUGHOUT ENTIRE MACHINE ROOM AFTER INSTALLATION OF EQUIPMENT, SPRINKLERS AND LIGHTING.
5. MACHINE ROOM TO BE VENTILATED IN ACCORDANCE WITH LOCAL CODE REGULATIONS.
6. EQUIPMENT IN THE MACHINE ROOM SHALL BE USED FOR THE FUNCTION OF THE ELEVATOR ONLY.
7. ACCESS TO ANOTHER PORTION OF THE BUILDING, INCLUDING THE ROOF, THROUGH THE MACHINE ROOM IS PROHIBITED PER CODE
8. MACHINE ROOM TEMPERATURE SHALL BE MAINTAINED BETWEEN 50-90 DEG. F.
9. LOCATE MACHINE ROOM WITHIN 25'-0" OF HOISTWAY (OR IN ACCORDANCE WITH LOCAL CODE REGULATIONS) AND THERE SHALL NOT BE AN EXPANSION JOINT BETWEEN THE HOISTWAY AND MACHINE ROOM.

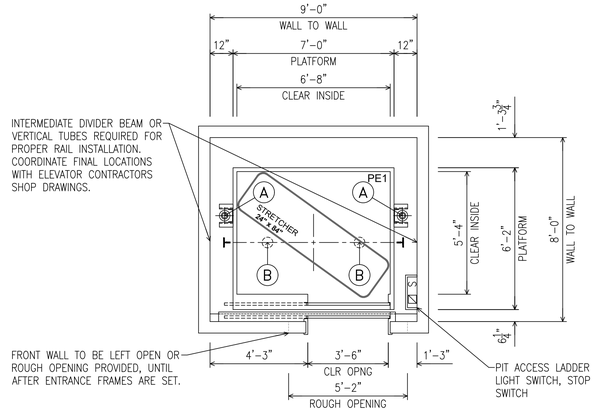

1 PIT / TYP. HOISTWAY PLAN

SCALE: 3/8"=1'-0"

PIT AND RAIL LOADS

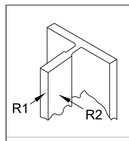

SEISMIC				S4
CLASS LOAD RATING				A
RAIL WEIGHT/SIZE				15
HYDRAULIC CYLINDER		A	*	11.0 K
CAR BUFFER REACTION ***		B	*	13.3 K
WEIGHT ONE STACK CAR RAIL				300 #
RAIL LOADS PER RAIL	NORMAL	R1		400 #
	FORCES	R2		300 #
	SEISMIC	R1	**	2200 #
	FORCES	R2	**	1200 #
MAX VERT SPAN GUIDE RAIL SUPPORT				10'

* LOADS SHOWN DO NOT ACT SIMULTANEOUSLY

** CAR AND CWT RAILS

*** BUFFER REACTIONS ARE DOUBLED FOR IMPACT

Rail support points shall have a max deflection of 1/8" when acted upon by forces R1 and R2
1/4" when acted upon by seismic forces R1 and R2

LOADS SHOWN ARE ESTIMATED. COORDINATE FINAL LOADS WITH ELEVATOR MANUFACTURER

PASSENGER ELEVATOR
PE1
CLASS "A" LOADING
3500# @ 150 FPM

NOTE: VDA DRAWINGS ARE PROVIDED FOR DESIGN INTENT ONLY. FINAL ENGINEERING SHALL BE PROVIDED BY ELEVATOR CONTRACTOR.

IDENTIFICATION STAMP
DIV. OF THE STATE ARCHITECT
APP: 01-119994 INC:
REVIEWED FOR
SS ☑ FLS ☑ ACS ☑
DATE: 08/16/2022

QUATTROCCHI KWOK ARCHITECTS
Main:
636 Fifth Street, Santa Rosa, CA 95404
East Bay:
55 Harrison Street, Suite 525,
Oakland, CA 94607
(707) 576-0829
LICENSED ARCHITECT
JIM THEISS
LICENSE # C22643
EXP. JUNE 30, 2023
STATE OF CALIFORNIA
Date: 06/28/2022

vda
ELEVATOR CONSULTANT
1388 Sutter Street, Suite 608
San Francisco, CA 94109
Phone: 415-243-0313
Email: contact@vdassoc.com

LIBERTY HIGH SCHOOL

NEW CLASSROOM BUILDING

850 2ND STREET
BRENTWOOD, CA
94513

LIBERTY UNION HIGH SCHOOL DISTRICT

REVISIONS

DSA APP NO. 01-119994
ARCH PROJECT NO: 1925.00
DRAWN BY: RM
DRAWING SCALE: AS INDICATED
PTN: 61721-83 FILE NO: 7-H4
CONSTRUCTION DOCUMENTS
JUNE 24, 2022

SHEET TITLE

ELEVATOR DETAILS

SHEET NUMBER

VT-1.0

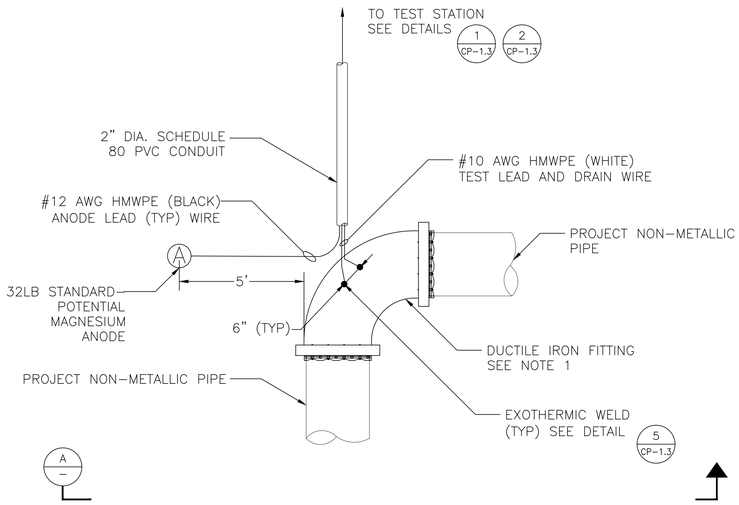

NOTE:

1. DUCTILE IRON FITTING MAY BE DIFFERENT GEOMETRY, SUCH AS TEE OR INLINE.
2. WRAP FITTING IN PETROLATUM WAX TAPE AND OVERLAP PIPE BY 2 TIMES THE PIPE DIAMETER.

ANODE TEST STATION (ATS) FOR METALLIC FITTING OR VALVE ON NON-METALLIC PIPE PLAN VIEW (1)
NTS

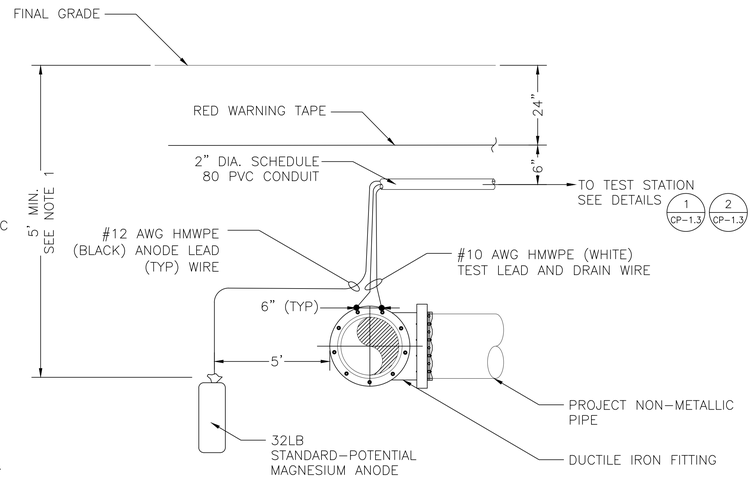

NOTE:

1. TOP OF ANODE SHALL BE AT OR BELOW PIPE INVERT.

ANODE TEST STATION (ATS) FOR METALLIC FITTING OR VALVE ON NON-METALLIC PIPE SECTION VIEW (A)
NTS

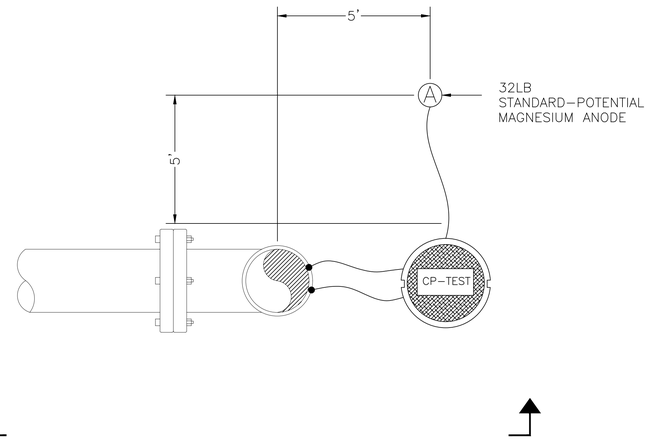

ANODE TEST STATION (ATS) FOR RISER PLAN VIEW (2)
NTS

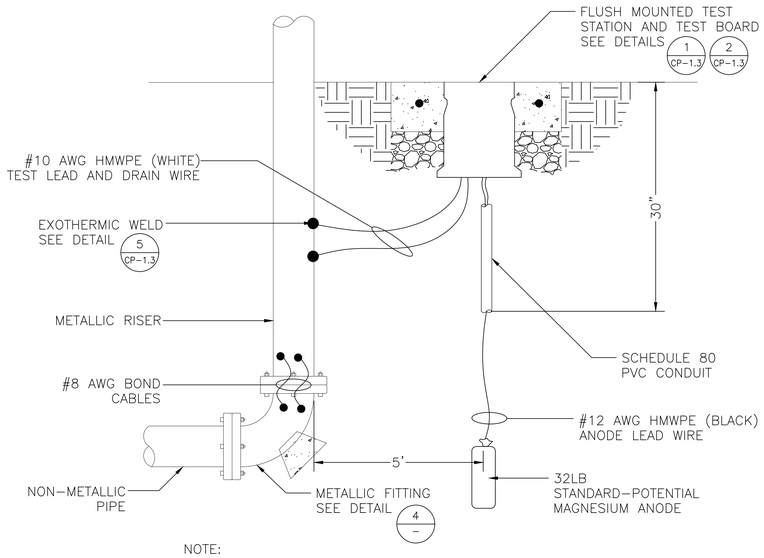

NOTE:

1. IF RISER IS DUCTILE IRON, BOND PIPE AND FITTINGS. RISER MAY HAVE 90 DEGREE ELBOW OR TEE. DUCTILE IRON PIPE AND FITTINGS SHALL HAVE POLYETHYLENE ENCASEMENT.
2. IF RISER IS STAINLESS STEEL, WRAP IN PETROLATUM WAX TAPE.

ANODE TEST STATION (ATS) FOR RISER SECTION VIEW (B)
NTS

DETAIL NOT USED

(3)

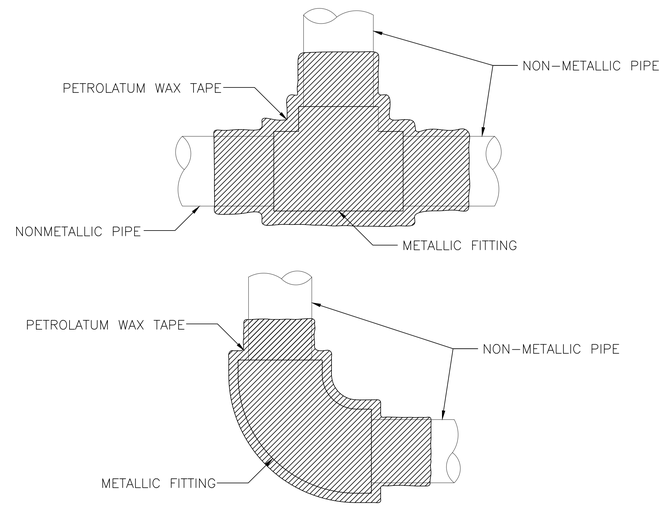

NOTES:

1. PETROLATUM WAX TAPE SHALL OVERLAP PIPE BY 2 TIMES THE PIPE DIAMETER.
2. ENCASE FITTING AND PETROLATUM WAX TAPE IN CONCRETE WITH 2-INCH COVER AT MINIMUM

CORROSION CONTROL FOR 2-INCH DIAMETER METALLIC FITTING (4)
NTS

IDENTIFICATION STAMP
DIV. OF THE STATE ARCHITECT
APP: 01-119994 INC:
REVIEWED FOR
SS ☑ FLS ☑ ACS ☑
DATE: 08/16/2022

QUATTROCCHI KWOK ARCHITECTS
Main:
636 Fifth Street, Santa Rosa, CA 95404
East Bay:
55 Harrison Street, Suite 525,
Oakland, CA 94607
(707) 576-0829

LIBERTY HIGH SCHOOL

NEW CLASSROOM BUILDING

850 2ND STREET
BRENTWOOD, CA
94513

LIBERTY UNION HIGH SCHOOL DISTRICT

REVISIONS

DSA APP NO. 01-119994
ARCH PROJECT NO: 1925.00
DRAWN BY: DRAFTSPERSON
DRAWING SCALE: SCALE
PTN. 61721-83 FILE NO. 7-H4
CONSTRUCTION DOCUMENTS

SHEET TITLE

CP DETAILS

SHEET NUMBER

CP-1.2

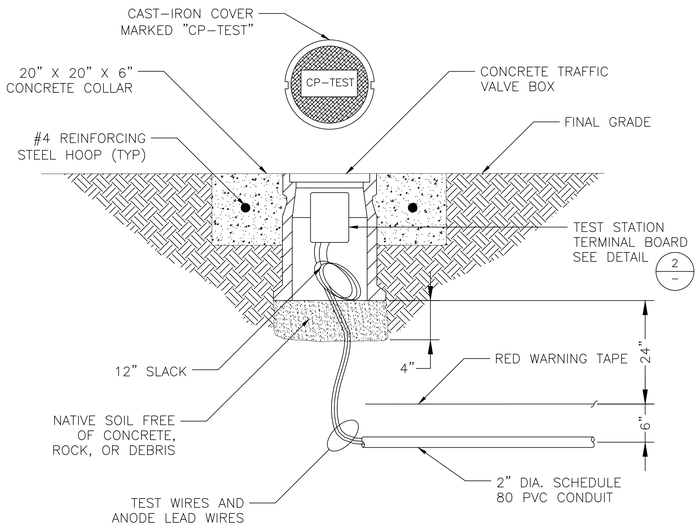

FLUSH MOUNTED TEST STATION DETAIL 1
NTS

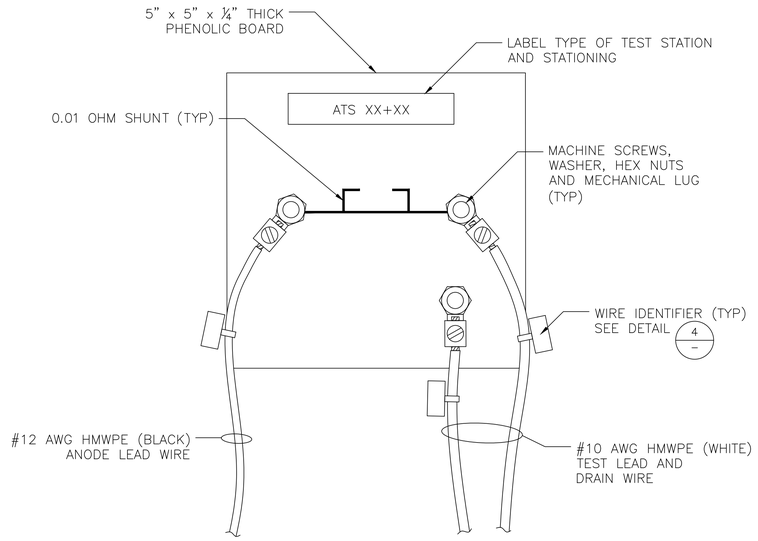

FLUSH-MOUNTED ANODE TEST STATION (ATS) TERMINAL BOARD DETAIL 2
NTS

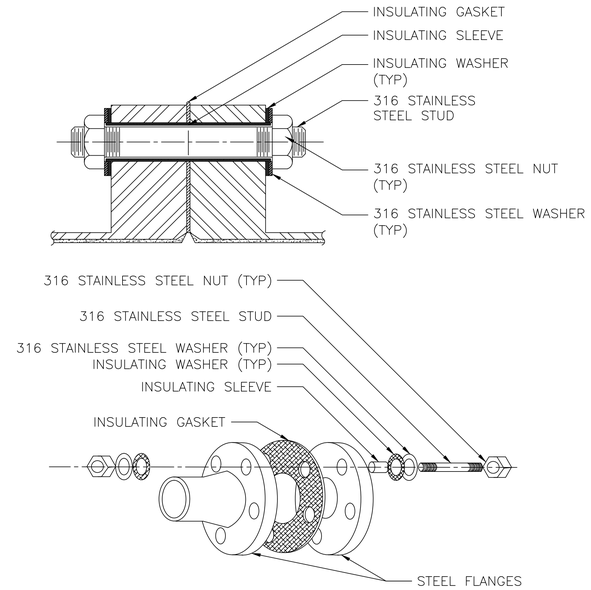

NOTE:

PETROLATUM WAX TAPE NOT SHOWN

DIELECTRIC INSULATING FLANGE KIT DETAIL WITH SECTION VIEW 3
NTS

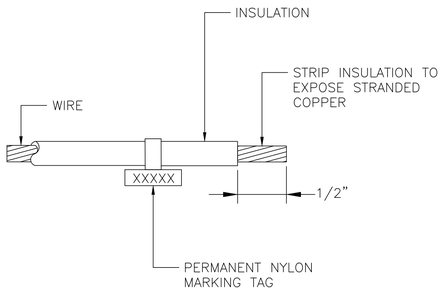

WIRE IDENTIFIER DETAIL 4
NTS

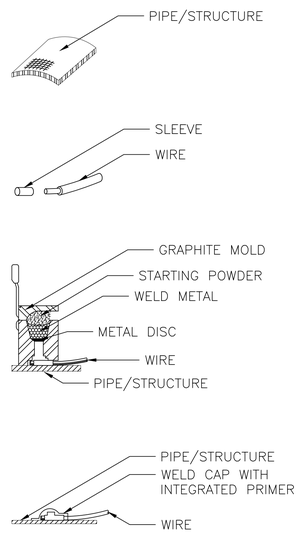

1. ALL WELDS SHALL BE 6" APART AT MINIMUM.
2. GRIND PIPE/STRUCTURE TO BARE METAL AND CLEAN SURFACE. GROUND AREA SHALL BE LARGE ENOUGH FOR EXOTHERMIC WELD AND SMALL ENOUGH TO BE COMPLETELY COVERED BY WELD CAP.
3. STRIP INSULATION FROM WIRE AND ATTACH SLEEVE.
4. HOLD MOLD FIRMLY WITH OPENING AWAY FROM OPERATOR. IGNITE WITH FLINT GUN. REMOVE SLAG FROM CONNECTION WITH CHIPPING HAMMER. TEST WELD WITH 22 OZ HAMMER.
5. COVER CONNECTION WITH WELD CAP WITH INTEGRATED PRIMER. REPAIR ALL DAMAGE TO COATING AND LINING IN ACCORDANCE WITH COATING AND LINING MFG RECOMMENDATIONS.

EXOTHERMIC WELD DETAIL FOR DUCTILE IRON AND STEEL PIPE 5
NTS

IDENTIFICATION STAMP
DIV. OF THE STATE ARCHITECT
APP: 01-119994 INC:
REVIEWED FOR
SS ☑ FLS ☑ ACS ☑
DATE: 08/16/2022

QUATTROCCHI KWOK ARCHITECTS
Main:
636 Fifth Street, Santa Rosa, CA 95404
East Bay:
55 Harrison Street, Suite 525,
Oakland, CA 94607
(707) 576-0829

LIBERTY HIGH SCHOOL

NEW CLASSROOM BUILDING

850 2ND STREET
BRENTWOOD, CA
94513

LIBERTY UNION HIGH SCHOOL DISTRICT

REVISIONS

DSA APP NO. 01-119994

ARCH PROJECT NO: 1925.00
DRAWN BY: DRAFTSPERSON
DRAWING SCALE: SCALE
PTN. 61721-83 FILE NO. 7-H4

CONSTRUCTION DOCUMENTS

SHEET TITLE

CP DETAILS

SHEET NUMBER

CP-1.3

Project Name:	Liberty High School Bldg A Classrooms	NRCC-PRF-01-E	Page 7 of 22
Project Address:	850 2nd Street Brentwood 94513	Calculation Date/Time:	10:32, Tue, Jan 18, 2022
Input File Name:	1925.00 Liberty HS Bldg A Classrooms v8.2.2.cibd19x		

G6. OVERHANG DETAILS

1	2	3	4	5	6
Fenestration Tag/ID	Orientation	Depth(ft.)	Height from Bottom of Sill to Overhang(ft)	Right Extent(ft)	Left Extent(ft)
A201-05 dr92	North	8.0	11	8.0	8.0
SF10 x 293	North	8.0	13	8.0	8.0
SF11 x 394	North	4.0	9.1	4.0	4.0
A206 dr116	West	4.0	7.1	4.0	4.0
SF13117	West	8.0	13	8.0	8.0
A208 dr133	West	4.0	7.1	4.0	4.0
SF14134	West	8.0	13	8.0	8.0
SF01146	East	3.0	7	6.0	6.0
SF01147	East	3.0	7	6.0	6.0
A209A A210A drs149	West	4.0	7.1	4.0	4.0
SF10 x 2150	West	8.0	13	8.0	8.0

H1. DRY SYSTEM EQUIPMENT (furnaces, air handling units, heat pumps, VRF, economizers etc.)

1	2	3	4	5	6	7	8	9	10	11	12
			Heating				Cooling				
Equipment Name	Equipment Type	Qty	Total Heating Output (kBtu/h)	Supp Heat Output (kBtuh)	Efficiency Unit	Efficiency	Total Cooling Output (kBtu/h)	Efficiency Unit	Efficiency	Economizer Type (if present)	Status[1]
HP-A101 thru A105	SZHP (Packaged3Phase)	5	46	0	HSPF	8.20	48	SEER EER	13.00 10.45	FixedDryBulb	N
HP-A106	SZHP (Packaged3Phase)	1	46	0	HSPF	8.20	48	SEER EER	13.00 10.45	FixedDryBulb	N
CU/FC-A108	SZHP (Split1Phase)	1	26	0	HSPF	8.200	24	SEER EER	14.000 12.200	NoEconomizer	N

Project Name:	Liberty High School Bldg A Classrooms	NRCC-PRF-01-E	Page 4 of 22
Project Address:	850 2nd Street Brentwood 94513	Calculation Date/Time:	10:32, Tue, Jan 18, 2022
Input File Name:	1925.00 Liberty HS Bldg A Classrooms v8.2.2.cibd19x		

G1. ENVELOPE GENERAL INFORMATION (conditioned spaces only)

1	2	3	4
Opaque Surfaces & Orientation	Total Gross Surface Area (ft^2)	Total Fenestration Area (ft^2)	Window to Wall Ratio (%)
North-Facing[1]	5,009 ft^2	858 ft^2	17.1%
East-Facing[2]	3,397 ft^2	1,418 ft^2	41.8%
South-Facing[3]	5,037 ft^2	1,400 ft^2	27.8%
West-Facing[4]	3,092 ft^2	521 ft^2	16.8%
Total	**16,533 ft^2**	**4,197 ft^2**	**25.4%**
Roof	8,060 ft^2	0 ft^2	00.0%

Notes:
[1] North-Facing is oriented to within 45 degrees of true north, including 45°00'00" east of north (NE), but excluding 45°00'00" west of north (NW).
[2] East-Facing is oriented to within 45 degrees of true east, including 45°00'00" south of east (SE), but excluding 45°00'00" north of east (NE).
[3] South-Facing is oriented to within 45 degrees of true south, including 45°00'00" west of south (SW), but excluding 45°00'00" east of south (SE).
[4] West-Facing is oriented to within 45 degrees of true west, including 45°00'00" north of due west (NW), but excluding 45°00'00" south of west (SW).

G2. CRRC ROOFING PRODUCT SUMMARY

1	2	3	4	5
Assembly Name	Roof Pitch	Aged Solar Reflectance	Thermal Emittance	SRI
BU Roof100	Low-Slope	0.63	0.75	Not Provided

G3. OPAQUE SURFACE ASSEMBLY SUMMARY

1	2	3	4	5	6	7	8	9	10
Surface Name	Surface Type	Area (ft^2)	Framing Type	Cavity R-Value	Continuous R-Value	Units	Value	Description of Assembly Layers	Status[1]
R-21+R5 Wall7	ExteriorWall	16533	Wood	21	5	U-Factor	0.048	Stucco - 7/8 in. Extruded Polystyrene - XPS - 1 in. R5.00 Vapor permeable felt - 1/8 in. Wood framed wall, 16in. OC, 5.5in., R-21 Gypsum Board - 1/2 in.	N

Project Name:	Liberty High School Bldg A Classrooms	NRCC-PRF-01-E	Page 1 of 22
Project Address:	850 2nd Street Brentwood 94513	Calculation Date/Time:	10:32, Tue, Jan 18, 2022
Input File Name:	1925.00 Liberty HS Bldg A Classrooms v8.2.2.cibd19x		

A. GENERAL INFORMATION

1	Project Location (city)	Brentwood	8	Standards Version	Compliance2019
2	CA Zip Code	94513	9	Compliance Software (version)	EnergyPro 8.2
3	Climate Zone	12	10	Weather File	LIVERMORE_724927_CZ2010.epw
4	Total Conditioned Floor Area in Scope	15,940 ft^2	11	Building Orientation (deg)	(N) 0 deg
5	Total Unconditioned Floor Area	204 ft^2	12	Permitted Scope of Work	NewComplete
6	Total # of Stories (Habitable Above Grade)	2	13	Building Type(s)	Nonresidential
7	Total # of dwelling units	0	14	Gas Type	NaturalGas

B. PROJECT SUMMARY

Table Instructions: Table B shows which building components are included in the performance calculation. If indicated as not included, the project must show compliance prescriptively if within permit application.

Building Components Complying via Performance					Building Components Complying Prescriptively	
Envelope (see Table G)	☒ Performance	Covered Process: Commercial Kitchens	☐ Performance		*The following building components are ONLY eligible for prescriptive compliance and should be documented on the NRCC form listed if within the scope of the permit application (i.e. compliance will not be shown on the NRCC-PRF-E).*	
	☐ Not Included		☒ Not Included			
Mechanical (see Table H)	☒ Performance	Covered Process: Computer Rooms	☐ Performance		Indoor Lighting (Unconditioned)§140.6	*NRCC-LTI-E*
	☐ Not Included		☒ Not Included		Outdoor Lighting §140.7	*NRCC-LTO-E*
Domestic Hot Water (see Table I)	☐ Performance	Covered Process: Laboratory Exhaust	☐ Performance		Sign Lighting §140.8	*NRCC -LTS-E*
	☒ Not Included		☒ Not Included		Mandatory Measures	
Lighting (Indoor Conditioned, see Table K)	☒ Performance				*Electrical power systems, commissioning, solar ready, elevator and escalator requirements are mandatory and should on the NRCC form listed if applicable (i.e. compliance will not be shown on the NRCC-PRF-E.)*	
	☐ Not Included				Electrical Power Distribution S110.11	*NRCC-ELC-E*
Solar Thermal Water Heating (see Table I)	☐ Performance				Commissioning §120.8	*NRCC-CXR-E*
	☒ Not Included				Solar Ready S110.10	*NRCC-SRA-E*

Project Name:	Liberty High School Bldg A Classrooms	NRCC-PRF-01-E	Page 8 of 22
Project Address:	850 2nd Street Brentwood 94513	Calculation Date/Time:	10:32, Tue, Jan 18, 2022
Input File Name:	1925.00 Liberty HS Bldg A Classrooms v8.2.2.cibd19x		

H1. DRY SYSTEM EQUIPMENT (furnaces, air handling units, heat pumps, VRF, economizers etc.)

1	2	3	4	5	6	7	8	9	10	11	12
			Heating				Cooling				
Equipment Name	Equipment Type	Qty	Total Heating Output (kBtu/h)	Supp Heat Output (kBtuh)	Efficiency Unit	Efficiency	Total Cooling Output (kBtu/h)	Efficiency Unit	Efficiency	Economizer Type (if present)	Status[1]
CU/FC-A112	SZHP (Split1Phase)	1	38	0	HSPF	8.200	36	SEER EER	14.000 12.200	NoEconomizer	N
HP-A109	SZHP (Packaged3Phase)	1	46	0	HSPF	8.20	48	SEER EER	13.00 10.45	FixedDryBulb	N
HP-A110	SZHP (Packaged3Phase)	1	46	0	HSPF	8.20	48	SEER EER	13.00 10.45	FixedDryBulb	N
HP-A201 thru A205	SZHP (Packaged3Phase)	5	46	0	HSPF	8.20	48	SEER EER	13.00 10.45	FixedDryBulb	N
HP-A206	SZHP (Packaged3Phase)	1	46	0	HSPF	8.20	48	SEER EER	13.00 10.45	FixedDryBulb	N
HP-A208	SZHP (Packaged3Phase)	1	34	0	HSPF	8.20	36	SEER EER	13.00 10.60	FixedDryBulb	N
HP-A209 + A210	SZHP (Packaged3Phase)	2	46	0	HSPF	8.20	48	SEER EER	13.00 10.45	FixedDryBulb	N

[1] Status: N - New, A – Altered, E – Existing

H2. FAN SYSTEMS SUMMARY[1]

1	2	3	4	5	6	7	8	9	10	11	12	13
	System Type	Design OA		Supply Fan				Return Fan				
Name or Item Tag	packaged, DOAS, etc.	CFM	CFM	BHP	Watts	Control	CFM	BHP	Watts	Control	Economizer Type (if present)	Status[1]
HP-A101 thru A105	SZHP	333	1600	0.800	697.6	ConstantVolume	NA	NA	NA	NA	FixedDryBulb	N
HP-A106	SZHP	369	1600	0.800	697.6	ConstantVolume	NA	NA	NA	NA	FixedDryBulb	N
CU/FC-A108	SZHP	19	775	0.380	331.4	ConstantVolume	NA	NA	NA	NA	NoEconomizer	N
CU/FC-A112	SZHP	19	900	0.378	329.8	ConstantVolume	NA	NA	NA	NA	NoEconomizer	N
HP-A109	SZHP	372	1600	0.800	697.6	ConstantVolume	NA	NA	NA	NA	FixedDryBulb	N

Project Name:	Liberty High School Bldg A Classrooms	NRCC-PRF-01-E	Page 5 of 22
Project Address:	850 2nd Street Brentwood 94513	Calculation Date/Time:	10:32, Tue, Jan 18, 2022
Input File Name:	1925.00 Liberty HS Bldg A Classrooms v8.2.2.cibd19x		

G3. OPAQUE SURFACE ASSEMBLY SUMMARY

1	2	3	4	5	6	7	8	9	10
Surface Name	Surface Type	Area (ft^2)	Framing Type	Cavity R-Value	Continuous R-Value	Units	Value	Description of Assembly Layers	Status[1]
Slab On Grade16	UndergroundFloor	8084	NA	0	NA	F-Factor	0.73	Slab Type = UnheatedSlabOnGrade Insulation Orientation = None Insulation R-Value = R0	N
interior R-13 Wall21	InteriorWall	500	Wood	13	NA	U-Factor	0.093	Gypsum Board - 1/2 in. Wood framed wall, 16in. OC, 3.5in., R-13 Gypsum Board - 1/2 in.	N
R-13 Wall28	ExteriorWall	160	Wood	13	NA	U-Factor	0.102	Stucco - 7/8 in. Vapor permeable felt - 1/8 in. Wood framed wall, 16in. OC, 3.5in., R-13 Gypsum Board - 1/2 in.	N
BU Roof100	Roof	8060	NA	0	30	U-Factor	0.032	Built-up roofing - 3/8 in. Plywood - 1/2 in. Compliance Insulation R30.00 Metal Deck - 1/16 in.	N
interior R0 Floor102	InteriorFloor	8060	NA	0	NA	U-Factor	0.181	Air - Floor - 3 1/2 in. Plywood - 1/2 in. Carpet - 3/4 in.	N

[1] Status: N - New, A – Altered, E – Existing

Project Name:	Liberty High School Bldg A Classrooms	NRCC-PRF-01-E	Page 2 of 22
Project Address:	850 2nd Street Brentwood 94513	Calculation Date/Time:	10:32, Tue, Jan 18, 2022
Input File Name:	1925.00 Liberty HS Bldg A Classrooms v8.2.2.cibd19x		

C1. COMPLIANCE RESULTS FOR PERFORMANCE COMPONENTS (Annual TDV Energy Use, kBtu/ft ²-yr)

COMPLIES

Energy Component	Standard Design (TDV)	Proposed Design (TDV)	Compliance Margin (TDV)[1]
Space Heating	22.93	10.96	11.97
Space Cooling	93.24	69.03	24.21
Indoor Fans	129.90	111.92	17.98
Heat Rejection	--	--	--
Pumps & Misc.	--	--	--
Domestic Hot Water	12.13	12.13	--
Indoor Lighting	40.64	38.83	1.81
ENERGY STANDARDS COMPLIANCE TOTAL	**298.84**	**242.87**	**55.97 (18.7%)**

[1] Notes: The number in parenthesis following the Compliance Margin in column 4. represents the Percent Better than Standard.

C2. RESULTS FOR 'ABOVE CODE' QUALIFICATIONS[1]

☐ This project is pursuing CalGreen Tier 1 ☐ This project is pursuing CalGreen Tier 2

Miscellaneous Energy Component	Standard Design (TDV)	Proposed Design (TDV)	Compliance Margin (TDV)[1]
Receptacle	77.94	77.94	--
Process	--	--	--
Other Ltg	1.02	1.02	--
Process Motors	--	--	--
COMPLIANCE TOTAL PLUS MISCELLANEOUS COMPONENTS	**377.80**	**321.83**	**56.0 (14.8%)**

[1] Notes: This table is used to document compliance with programs OTHER THAN Title 24 Part 6, if applicable.

Project Name:	Liberty High School Bldg A Classrooms	NRCC-PRF-01-E	Page 9 of 22
Project Address:	850 2nd Street Brentwood 94513	Calculation Date/Time:	10:32, Tue, Jan 18, 2022
Input File Name:	1925.00 Liberty HS Bldg A Classrooms v8.2.2.cibd19x		

H2. FAN SYSTEMS SUMMARY[1]

1	2	3	4	5	6	7	8	9	10	11	12	13
	System Type	Design OA		Supply Fan				Return Fan				
Name or Item Tag	packaged, DOAS, etc.	CFM	CFM	BHP	Watts	Control	CFM	BHP	Watts	Control	Economizer Type (if present)	Status[1]
HP-A110	SZHP	338	1600	0.800	697.6	ConstantVolume	NA	NA	NA	NA	FixedDryBulb	N
HP-A201 thru A205	SZHP	340	1600	0.800	697.6	ConstantVolume	NA	NA	NA	NA	FixedDryBulb	N
HP-A206	SZHP	338	1600	0.800	697.6	ConstantVolume	NA	NA	NA	NA	FixedDryBulb	N
HP-A208	SZHP	313	1200	0.600	523.2	ConstantVolume	NA	NA	NA	NA	FixedDryBulb	N
HP-A209 + A210	SZHP	339	1600	0.800	697.6	ConstantVolume	NA	NA	NA	NA	FixedDryBulb	N

[1] Status: N - New, A – Altered, E – Existing

H3. EXHAUST FAN SUMMARY

1	2	3	4	5	6	7
System ID	Zone Name	Qty	CFM	Motor BHP	Motor Watts	Total Static Pressure (in H20)
A106A Toilet34	5-A106A Toilet	1	51	0.022	19.0	1.76
A110A Toilet63	8-A110A Toilet	1	51	0.022	19.0	1.76
uc A207 Custodian103	11-uc A207 Custodian	1	75	0.029	25.0	1.58
A208A Toilet120	12-A208A Toilet	1	51	0.022	19.0	1.76

H4. Wet System Equipment(boilers,chillers,cooling towers,etc.)

This Section Does Not Apply

H5. SYSTEM SPECIAL FEATURES

1	2	3	4	5	6
System Name	Optimum Start	Window Interlocks per §140.4(n)	Evaporative Cooling	Heat Recovery	Other Controls
HP-A101 thru A105	No Optimum Start	NA	No Evaporative Cooler	No Heat Recovery	1 Zones With CO2Sensor Vent. Control, No DDC Fixed DryBulb Economizer No Supply Air Temp. Control

Project Name:	Liberty High School Bldg A Classrooms	NRCC-PRF-01-E	Page 6 of 22
Project Address:	850 2nd Street Brentwood 94513	Calculation Date/Time:	10:32, Tue, Jan 18, 2022
Input File Name:	1925.00 Liberty HS Bldg A Classrooms v8.2.2.cibd19x		

G5. FENESTRATION ASSEMBLY SUMMARY

1	2	3	4	5	6	7	8	9
Fenestration Assembly Name / Tag or I.D.	Fenestration Type / Product Type / Frame Type	Certification Method[1]	Assembly Method	Area ft^2	Overall U-factor	Overall SHGC	Overall VT	Status[2]
NFRC door .45/.23/.17	VerticalFenestration GlazedDoor N/A	NFRC Rated	Manufactured	420	0.45	0.23	0.17	N
NFRC strft .41/.26/.46	VerticalFenestration CurtainWall N/A	NFRC Rated	Manufactured	3777	0.41	0.26	0.46	N

[1] Newly installed fenestration shall have a certified NFRC Label Certificate or use the CEC default tables found in Table 110.6-A and Table 110.6-B. Center of Glass (COG) values are for the glass-only, determined by the manufacturer, and are shown for ease of verification. Site-built fenestration values are calculated per Nonresidential Appendix NA6 and are used in the analysis.
[2] Status: N - New, A – Altered, E – Existing

G6. OVERHANG DETAILS

1	2	3	4	5	6
Fenestration Tag/ID	Orientation	Depth(ft.)	Height from Bottom of Sill to Overhang(ft)	Right Extent(ft)	Left Extent(ft)
A101-05 dr8	North	8.0	11	8.0	8.0
SF10 x 29	North	8.0	13	8.0	8.0
SF11 x 310	North	4.0	9.1	4.0	4.0
A106B dr45	East	4.0	7.1	4.0	4.0
SF1046	East	4.0	9.1	4.0	4.0
A106A dr50	West	4.0	7.1	4.0	4.0
SF1351	West	8.0	13	8.0	8.0
A110B dr75	East	4.0	7.1	4.0	4.0
SF1176	East	4.0	9.1	4.0	4.0
A106A dr78	West	4.0	7.1	4.0	4.0
SF1079	West	8.0	13	8.0	8.0
A110B dr84	East	4.0	7.1	4.0	4.0
SF0185	East	3.0	7	6.0	6.0
A106A dr87	West	4.0	7.1	4.0	4.0
SF1088	West	8.0	13	8.0	8.0

Project Name:	Liberty High School Bldg A Classrooms	NRCC-PRF-01-E	Page 3 of 22
Project Address:	850 2nd Street Brentwood 94513	Calculation Date/Time:	10:32, Tue, Jan 18, 2022
Input File Name:	1925.00 Liberty HS Bldg A Classrooms v8.2.2.cibd19x		

C3. ENERGY USE SUMMARY

Energy Component	Standard Design Site (MWh)	Proposed Design Site (MWh)	Margin (MWh)	Standard Design Site (MBtu)	Proposed Design Site (MBtu)	Margin (MBtu)
Space Heating	--	7.1	--	181.9	--	--
Space Cooling	29.4	20.0	9.4	--	--	--
Indoor Fans	67.8	58.9	8.9	--	--	--
Heat Rejection	--	--	--	--	--	--
Pumps & Misc.	--	--	--	--	--	--
Domestic Hot Water	0.1	0.1	0.0	106.7	106.7	0.0
Indoor Lighting	22.7	21.6	1.1	--	--	--
Compliance Total	**120.0**	**107.7**	**12.3**	**288.6**	**106.7**	**181.9**
Receptacle	43.9	43.9	0.0	--	--	--
Process	--	--	--	--	--	--
Other Ltg	0.6	0.6	0.0	--	--	--
Process Motors	--	--	--	--	--	--
TOTAL	**164.5**	**152.2**	**12.3**	**288.6**	**106.7**	**181.9**

D. EXCEPTIONAL CONDITIONS

The aged solar reflectance and aged thermal emittance must be listed in the Cool Roof Rating Council database of certified products. For projects where initial reflectance is used, the initial reflectance must be listed, and the aged reflectance is calculated by the software program and used in the compliance model.

The building does not include service water heating. Verify that service water heating is not required and is not included in the design.

This project uses the Simplified Geometry Performance Modeling Approach which is not capable of modeling daylighting controls and assumes the prescriptive Secondary Daylit Control requirements are met. PRESCRIPTIVE COMPLIANCE documentation (form NRCC-LTI-02-E) for the requirements of section 140.6(d) Automatic Daylighting Controls in Secondary Daylit Zones is required.

E. HERS VERIFICATION

This Section Does Not Apply

IDENTIFICATION STAMP
DIV. OF THE STATE ARCHITECT
APP: 01-119994 INC:
REVIEWED FOR
SS ☑ FLS ☑ ACS ☑
DATE: 08/16/2022

QUATTROCCHI KWOK ARCHITECTS
Main:
636 Fifth Street, Santa Rosa, CA 95404
East Bay:
55 Harrison Street, Suite 525,
Oakland, CA 94607
(707) 576-0829

LICENSED ARCHITECT
JIM THEISS
LICENSE # C22643
EXP JUNE 30, 2023
STATE OF CALIFORNIA
SIGNED: JUNE 24, 2022

LIBERTY HIGH SCHOOL

NEW CLASSROOM BUILDINGS

850 2ND STREET
BRENTWOOD, CA
94513

LIBERTY UNION HIGH SCHOOL DISTRICT

DSA APP NO. 01-119994
ARCH PROJECT NO: 1925.00
DRAWN BY:
DRAWING SCALE:
PTN: 61721-83 FILE NO: 7-H4
CONSTRUCTION DOCUMENTS
JUNE 24, 2022
SHEET TITLE

TITLE 24

SHEET NUMBER

T-A1.1

BIMcloud: archiserver - BIMcloud Basic for ARCHICAD 22/1925.00 Liberty HS Classroom, BLDG A, AC22.6/28/2022.4:19 PM

Project Name:	Liberty High School Bldg A Classrooms	NRCC-PRF-01-E	Page 16 of 22
Project Address:	850 2nd Street Brentwood 94513	Calculation Date/Time:	10:32, Tue, Jan 18, 2022
Input File Name:	1925.00 Liberty HS Bldg A Classrooms v8.2.2.cibd19x		

K3. INDOOR CONDITIONED LIGHTING CONTROL CREDITS

Lighting Control Credits Schedule (includes all lighting controls installed in conditioned space for compliance credit per §140.6(a)2 and Table 140.6-A)

1	2	3	4	5	6	7	8	9
Area Description	Primary Function Area (must meet requirements of Table 140.6-A)	Type of Lighting Control	Power Adjustment Factor (PAF)	Luminaire Name or Item Tag	Watts per Luminaires	# of Luminaires	Lighting Controlled (Watts)	Control Credit (Watts)
			0.00 0.00 0.00					
S-9-A110B Sensory Room	Classroom, Lecture, Training, Vocational Areas	NA	0.00 0.00 0.00 0.00 0.00	AE1	16.0	1	16	0
S-9-A110B Sensory Room	Classroom, Lecture, Training, Vocational Areas	NA	0.00 0.00 0.00 0.00 0.00	AD1	64.0	1	64	0
S-10-A110A Toilet	Restrooms	NA	0.00 0.00 0.00 0.00 0.00	AB1	19.0	1	19	0
S-10-A110A Toilet	Restrooms	NA	0.00 0.00 0.00 0.00 0.00	AB2	29.0	1	29	0
S-11-A109/110 Special Day Clas	Classroom, Lecture, Training, Vocational Areas	NA	0.00 0.00 0.00 0.00 0.00	AA5	600.0	3	600	0
S-11-A109/110 Special Day Clas	Classroom, Lecture, Training, Vocational Areas	NA	0.00 0.00 0.00 0.00 0.00	AE1	32.0	2	32	0

Project Name:	Liberty High School Bldg A Classrooms	NRCC-PRF-01-E	Page 17 of 22
Project Address:	850 2nd Street Brentwood 94513	Calculation Date/Time:	10:32, Tue, Jan 18, 2022
Input File Name:	1925.00 Liberty HS Bldg A Classrooms v8.2.2.cibd19x		

K3. INDOOR CONDITIONED LIGHTING CONTROL CREDITS

Lighting Control Credits Schedule (includes all lighting controls installed in conditioned space for compliance credit per §140.6(a)2 and Table 140.6-A)

1	2	3	4	5	6	7	8	9
Area Description	Primary Function Area (must meet requirements of Table 140.6-A)	Type of Lighting Control	Power Adjustment Factor (PAF)	Luminaire Name or Item Tag	Watts per Luminaires	# of Luminaires	Lighting Controlled (Watts)	Control Credit (Watts)
			0.00					
S-11-A109/110 Special Day Clas	Classroom, Lecture, Training, Vocational Areas	NA	0.00 0.00 0.00 0.00 0.00	AE2	16.0	1	16	0
S-11-A109/110 Special Day Clas	Classroom, Lecture, Training, Vocational Areas	NA	0.00 0.00 0.00 0.00 0.00	AH1	36.0	3	36	0
S-11-A109/110 Special Day Clas	Classroom, Lecture, Training, Vocational Areas	NA	0.00 0.00 0.00 0.00 0.00	AG1	38.0	1	38	0
S-12-A111 Classroom	Classroom, Lecture, Training, Vocational Areas	NA	0.00 0.00 0.00 0.00 0.00	AA5	600.0	3	600	0
S-13-A201 thru A205 Classroom	Classroom, Lecture, Training, Vocational Areas	NA	0.00 0.00 0.00 0.00 0.00	AA5	3000.0	15	3000	0
S-14-uc A207 Custodian	General/Commercial & Industrial Work Area (Low Bay)	NA	0.00 0.00 0.00 0.00 0.00	AC3	40.0	2	40	0

Project Name:	Liberty High School Bldg A Classrooms	NRCC-PRF-01-E	Page 18 of 22
Project Address:	850 2nd Street Brentwood 94513	Calculation Date/Time:	10:32, Tue, Jan 18, 2022
Input File Name:	1925.00 Liberty HS Bldg A Classrooms v8.2.2.cibd19x		

K3. INDOOR CONDITIONED LIGHTING CONTROL CREDITS

Lighting Control Credits Schedule (includes all lighting controls installed in conditioned space for compliance credit per §140.6(a)2 and Table 140.6-A)

1	2	3	4	5	6	7	8	9
Area Description	Primary Function Area (must meet requirements of Table 140.6-A)	Type of Lighting Control	Power Adjustment Factor (PAF)	Luminaire Name or Item Tag	Watts per Luminaires	# of Luminaires	Lighting Controlled (Watts)	Control Credit (Watts)
S-15-A206 Classroom	Classroom, Lecture, Training, Vocational Areas	NA	0.00 0.00 0.00 0.00 0.00	AA5	600.0	3	600	0
S-16-A208A Toilet	Restrooms	NA	0.00 0.00 0.00 0.00 0.00	AB2	29.0	1	29	0
S-17-A208 Staff Break Room	Lounge, Breakroom, or Waiting Area	NA	0.00 0.00 0.00 0.00 0.00	AA4	320.0	2	320	0
S-17-A208 Staff Break Room	Lounge, Breakroom, or Waiting Area	NA	0.00 0.00 0.00 0.00 0.00	AE1	64.0	4	64	0
S-18-A208B Flexible Office	Office Area (<250 square feet)	NA	0.00 0.00 0.00 0.00 0.00	AA2	80.0	1	80	0
S-19-A209 + A210 Classrooms	Classroom, Lecture, Training, Vocational Areas	NA	0.00 0.00 0.00 0.00 0.00	AA5	1200.0	6	1200	0

Project Name:	Liberty High School Bldg A Classrooms	NRCC-PRF-01-E	Page 13 of 22
Project Address:	850 2nd Street Brentwood 94513	Calculation Date/Time:	10:32, Tue, Jan 18, 2022
Input File Name:	1925.00 Liberty HS Bldg A Classrooms v8.2.2.cibd19x		

K1. INDOOR CONDITIONED LIGHTING GENERAL INFO

1	2	3	4	5	6
Occupancy Type [1]	**Conditioned Floor Area** [2] **(ft^2)**	**Installed Lighting Power (Watts)**	**Lighting Control Credits (Watts)**	**Additional (Custom) Allowance**	
				Area Category Footnotes (Watts)	**Tailored Method (Watts)**
Classroom, Lecture, Training, Vocational Areas	14,812	9,914	0	0	0
Electrical, Mechanical, Telephone Rooms	112	40	0	0	0
Restrooms	242	125	0	0	0
General/Commercial & Industrial Work Area (Low Bay)	72	40	0	0	0
Lounge, Breakroom, or Waiting Area	593	384	0	0	0
Office Area (<250 square feet)	109	80	0	0	0
Building Totals:	**15,940**	**10,583**	**0**	**0**	**0**

[1] See Table 140.6-C
[2] See NRCC-LTI-01-E for unconditioned spaces
[3] Lighting information for existing spaces modeled is not included in the table

K2. INDOOR CONDITIONED LIGHTING SCHEDULE

Luminaire Schedule (includes all permanent installed lighting in conditioned space, and portable lighting over 0.3 w/ft^2 in offices)

		Installed Watts (Conditioned)			
1	2	3	4	5	6
Name or Item Tag	**Complete Luminaire Description (i.e., 3-lamp fluorescent troffer, F32T8, one dimmable electronic ballast)**	**Watts per luminaire**	**How Wattage is Determined**	**Total Number Luminaires**	**Installed Watts**
AA2	AA2 8' Direct/Indirect 80w LED	80	According to §130.0(c)	1	80
AA4	AA4 16' Direct/Indirect 160w LED	160	According to §130.0(c)	2	320
AA5	AA5 20' Direct/Indirect 200w LED	200	According to §130.0(c)	48	9,600

Project Name:	Liberty High School Bldg A Classrooms	NRCC-PRF-01-E	Page 14 of 22
Project Address:	850 2nd Street Brentwood 94513	Calculation Date/Time:	10:32, Tue, Jan 18, 2022
Input File Name:	1925.00 Liberty HS Bldg A Classrooms v8.2.2.cibd19x		

K2. INDOOR CONDITIONED LIGHTING SCHEDULE

Luminaire Schedule (includes all permanent installed lighting in conditioned space, and portable lighting over 0.3 w/ft^2 in offices)

		Installed Watts (Conditioned)			
1	2	3	4	5	6
Name or Item Tag	**Complete Luminaire Description (i.e., 3-lamp fluorescent troffer, F32T8, one dimmable electronic ballast)**	**Watts per luminaire**	**How Wattage is Determined**	**Total Number Luminaires**	**Installed Watts**
AB1	AB1 4' over Mirror 19w LED	19	According to §130.0(c)	2	38
AB2	AB2 6' over Mirror 29w LED	29	According to §130.0(c)	3	87
AC3	AC3 4' Striplight 20w LED	20	According to §130.0(c)	4	80
AD1	AD1 Direct/Indirect 64w LED	64	According to §130.0(c)	2	128
AE1	AE1 Recessed 16w LED	16	According to §130.0(c)	10	160
AE2	AE2 Recessed 16w LED	16	According to §130.0(c)	1	16
AG1	AG1 Recessed 38w LED	38	According to §130.0(c)	1	38
AH1	AH1 Undercabinet 12w LED	12	According to §130.0(c)	3	36

K3. INDOOR CONDITIONED LIGHTING CONTROL CREDITS

Lighting Control Credits Schedule (includes all lighting controls installed in conditioned space for compliance credit per §140.6(a)2 and Table 140.6-A)

1	2	3	4	5	6	7	8	9
Area Description	Primary Function Area (must meet requirements of Table 140.6-A)	Type of Lighting Control	Power Adjustment Factor (PAF)	Luminaire Name or Item Tag	Watts per Luminaires	# of Luminaires	Lighting Controlled (Watts)	Control Credit (Watts)
S-1-A101 thru A105 Classrooms	Classroom, Lecture, Training, Vocational Areas	NA	0.00 0.00 0.00 0.00 0.00	AA5	3000.0	15	3000	0

Project Name:	Liberty High School Bldg A Classrooms	NRCC-PRF-01-E	Page 15 of 22
Project Address:	850 2nd Street Brentwood 94513	Calculation Date/Time:	10:32, Tue, Jan 18, 2022
Input File Name:	1925.00 Liberty HS Bldg A Classrooms v8.2.2.cibd19x		

K3. INDOOR CONDITIONED LIGHTING CONTROL CREDITS

Lighting Control Credits Schedule (includes all lighting controls installed in conditioned space for compliance credit per §140.6(a)2 and Table 140.6-A)

1	2	3	4	5	6	7	8	9
Area Description	Primary Function Area (must meet requirements of Table 140.6-A)	Type of Lighting Control	Power Adjustment Factor (PAF)	Luminaire Name or Item Tag	Watts per Luminaires	# of Luminaires	Lighting Controlled (Watts)	Control Credit (Watts)
S-2-A108 Electric/IDE	Electrical, Mechanical, Telephone Rooms	NA	0.00 0.00 0.00 0.00 0.00	AC3	40.0	2	40	0
S-6-A106A Toilet	Restrooms	NA	0.00 0.00 0.00 0.00 0.00	AB1	19.0	1	19	0
S-6-A106A Toilet	Restrooms	NA	0.00 0.00 0.00 0.00 0.00	AB2	29.0	1	29	0
S-7-A106 Special Day Classroo	Classroom, Lecture, Training, Vocational Areas	NA	0.00 0.00 0.00 0.00 0.00	AA5	600.0	3	600	0
S-7-A106 Special Day Classroo	Classroom, Lecture, Training, Vocational Areas	NA	0.00 0.00 0.00 0.00 0.00	AE1	32.0	2	32	0
S-8-A106B Sensory Room	Classroom, Lecture, Training, Vocational Areas	NA	0.00 0.00 0.00 0.00 0.00	AE1	16.0	1	16	0
S-8-A106B Sensory Room	Classroom, Lecture, Training, Vocational Areas	NA	0.00 0.00	AD1	64.0	1	64	0

Project Name:	Liberty High School Bldg A Classrooms	NRCC-PRF-01-E	Page 10 of 22
Project Address:	850 2nd Street Brentwood 94513	Calculation Date/Time:	10:32, Tue, Jan 18, 2022
Input File Name:	1925.00 Liberty HS Bldg A Classrooms v8.2.2.cibd19x		

H5. SYSTEM SPECIAL FEATURES

1	2	3	4	5	6
System Name	**Optimum Start**	**Window Interlocks per §140.4(n)**	**Evaporative Cooling**	**Heat Recovery**	**Other Controls**
HP-A106	No Optimum Start	NA	No Evaporative Cooler	No Heat Recovery	1 Zones With CO2Sensor Vent. Control, No DDC Fixed Drybulb Economizer No Supply Air Temp. Control
CU/FC-A108	No Optimum Start	NA	No Evaporative Cooler	No Heat Recovery	No DCV Controls, No DDC No Economizer No Supply Air Temp. Control
CU/FC-A112	No Optimum Start	NA	No Evaporative Cooler	No Heat Recovery	No DCV Controls, No DDC No Economizer No Supply Air Temp. Control
HP-A109	No Optimum Start	NA	No Evaporative Cooler	No Heat Recovery	1 Zones With CO2Sensor Vent. Control, No DDC Fixed Drybulb Economizer No Supply Air Temp. Control
HP-A110	No Optimum Start	NA	No Evaporative Cooler	No Heat Recovery	1 Zones With CO2Sensor Vent. Control, No DDC Fixed Drybulb Economizer No Supply Air Temp. Control
HP-A201 thru A205	No Optimum Start	NA	No Evaporative Cooler	No Heat Recovery	1 Zones With CO2Sensor Vent. Control, No DDC Fixed Drybulb Economizer No Supply Air Temp. Control
HP-A206	No Optimum Start	NA	No Evaporative Cooler	No Heat Recovery	1 Zones With CO2Sensor Vent. Control, No DDC Fixed Drybulb Economizer No Supply Air Temp. Control
HP-A208	No Optimum Start	NA	No Evaporative Cooler	No Heat Recovery	1 Zones With CO2Sensor Vent. Control, No DDC Fixed Drybulb Economizer No Supply Air Temp. Control
HP-A209 + A210	No Optimum Start	NA	No Evaporative Cooler	No Heat Recovery	1 Zones With CO2Sensor Vent. Control, No DDC Fixed Drybulb Economizer No Supply Air Temp. Control

Project Name:	Liberty High School Bldg A Classrooms	NRCC-PRF-01-E	Page 11 of 22
Project Address:	850 2nd Street Brentwood 94513	Calculation Date/Time:	10:32, Tue, Jan 18, 2022
Input File Name:	1925.00 Liberty HS Bldg A Classrooms v8.2.2.cibd19x		

H5. SYSTEM SPECIAL FEATURES

1	2	3	4	5	6
System Name	**Optimum Start**	**Window Interlocks per §140.4(n)**	**Evaporative Cooling**	**Heat Recovery**	**Other Controls**

Notes: This table includes controls related to the performance path only. For projects using the prescriptive path, mandatory and prescriptive controls requirements are documented on the NRCC-MCH-E.

H6. MECHANICAL VENTILATION

1	2	3	4	5	6	7	8	9
Zone Name	**Mechanical Ventilation**							**DCV or Occupant Sensor Controls, or Both**
	Ventilation Function	**# hotel rooms**	**# of people**	**# of bedrooms**	**Supply OA CFM**	**Exhaust CFM**	**Conditioned Area (sf)**	
1-A101 thru A105 Classrooms	Education - Classrooms (ages 9-18) General - Unoccupied	0	111.32	0	1667	0	4558	NA
5-A106A Toilet	Exhaust - Toilets, private Education - Classrooms (ages 9-18)	0	25.08	0	369	51	1080	DCV
6-A106B Sensory Room	Misc - All others	0	3.17	0	19	0	127	NA
7-A110B Sensory Room	Misc - All others	0	3.17	0	19	0	127	NA
8-A110A Toilet	Exhaust - Toilets, private Education - Classrooms (ages 9-18)	0	25.28	0	372	51	1088	DCV
9-A111 Classroom	Education - Classrooms (ages 9-18)	0	22.50	0	338	0	900	DCV
10-A201 thru A205 Classroom	Education - Classrooms (ages 9-18)	0	113.20	0	1698	0	4528	DCV
11-uc A207 Custodian	Exhaust - Janitor closets, trash rooms, recycling Education - Classrooms (ages 9-18)	0	22.86	0	338	75	972	DCV
12-A208A Toilet	Exhaust - Toilets, private General - Break rooms Office - Office space	0	20.56	0	313	51	752	Both
13-A209 + A210 Classrooms	Education - Classrooms (ages 9-18)	0	45.20	0	678	0	1808	DCV

Project Name:	Liberty High School Bldg A Classrooms	NRCC-PRF-01-E	Page 12 of 22
Project Address:	850 2nd Street Brentwood 94513	Calculation Date/Time:	10:32, Tue, Jan 18, 2022
Input File Name:	1925.00 Liberty HS Bldg A Classrooms v8.2.2.cibd19x		

Multifamily or Hotel/Motel Occupancy? (if "Yes", see DOMESTIC/SERVICE HOT WATER SYSTEM SUMMARY)	No
Does the Project include Zonal Systems?	No

H7. ZONAL SYSTEM AND TERMINAL UNIT SUMMARY

1	2	3	4	5	6	7	8	9	10	11	12
System ID	**Zone Name**	**System Type**	**Rated Capacity (kBtuh)**		**Airflow (cfm)**			**Fan**			
			Heating	**Cooling**	**Design**	**Min.**	**Min. Ratio**	**BHP**	**Watts**	**Cycles**	**ECM Motor**
1-A101 thru A105 Classrooms-Trm	1-A101 thru A105 Classrooms	Uncontrolled	NA	NA	8000	NA	0.00	NA	NA	NA	☐
5-A106A Toilet-Trm	5-A106A Toilet	Uncontrolled	NA	NA	1600	NA	0.00	NA	NA	NA	☐
6-A106B Sensory Room-Trm	6-A106B Sensory Room	Uncontrolled	NA	NA	775	NA	0.00	NA	NA	NA	☐
7-A110B Sensory Room-Trm	7-A110B Sensory Room	Uncontrolled	NA	NA	900	NA	0.00	NA	NA	NA	☐
8-A110A Toilet-Trm	8-A110A Toilet	Uncontrolled	NA	NA	1600	NA	0.00	NA	NA	NA	☐
9-A111 Classroom-Trm	9-A111 Classroom	Uncontrolled	NA	NA	1600	NA	0.00	NA	NA	NA	☐
10-A201 thru A205 Classroom-Trm	10-A201 thru A205 Classroom	Uncontrolled	NA	NA	8000	NA	0.00	NA	NA	NA	☐
11-uc A207 Custodian-Trm	11-uc A207 Custodian	Uncontrolled	NA	NA	1600	NA	0.00	NA	NA	NA	☐
12-A208A Toilet-Trm	12-A208A Toilet	Uncontrolled	NA	NA	1200	NA	0.00	NA	NA	NA	☐
13-A209 + A210 Classrooms-Trm	13-A209 + A210 Classrooms	Uncontrolled	NA	NA	3200	NA	0.00	NA	NA	NA	☐

H8. EVAPORATIVE COOLER SUMMARY

This Section Does Not Apply

IDENTIFICATION STAMP
DIV. OF THE STATE ARCHITECT
APP: 01-119994 INC:
REVIEWED FOR
SS ☑ FLS ☑ ACS ☑
DATE: 08/16/2022

QUATTROCCHI KWOK ARCHITECTS
Main:
636 Fifth Street, Santa Rosa, CA 95404
East Bay:
55 Harrison Street, Suite 525,
Oakland, CA 94607
(707) 576-0829

LICENSED ARCHITECT
JIM THEISS
LICENSE # C22643
EXP JUNE 30, 2023
STATE OF CALIFORNIA
SIGNED: JUNE 24, 2022

LIBERTY HIGH SCHOOL

NEW CLASSROOM BUILDINGS

850 2ND STREET
BRENTWOOD, CA
94513

LIBERTY UNION HIGH SCHOOL DISTRICT

DSA APP NO. 01-119994
ARCH PROJECT NO: 1925.00
DRAWN BY:
DRAWING SCALE:
PTN: 61721-83 FILE NO: 7-H4
CONSTRUCTION DOCUMENTS
JUNE 24, 2022
SHEET TITLE

TITLE 24

SHEET NUMBER

T-A1.2

BIMcloud: archiserver - BIMcloud Basic for ARCHICAD 22/1925.00 Liberty HS Classroom, BLDG A, AC22:6/28/2022,4:19 PM

STATE OF CALIFORNIA
Indoor Lighting
NRCC-LTI-E — CALIFORNIA ENERGY COMMISSION

CERTIFICATE OF COMPLIANCE			**NRCC-LTI-E**
Project Name:	Liberty High School Bldg A Classrooms	**Report Page:**	**(Page 3 of 7)**
Project Address:	850 2nd Street	**Date Prepared:**	1/18/2022

F. INDOOR LIGHTING FIXTURE SCHEDULE

AF1	AF1 Wall 39w LED	No	No	39	Mfr. Spec	4	Yes	---	☐	☐
							Total Designed Watts: UNCONDITIONED SPACES	20		

[1]*FOOTNOTE: Design Watts for small aperture and color changing luminaires which qualify per §140.6(a)4B is adjusted to be 75% of their rated wattage. Table F automatically makes this adjustment, the permit applicant should enter full rated wattage in column D5.*

[2]*Authority Having Jurisdiction may ask for Luminaire cut sheets to confirm wattage used for compliance per §130.0(c) Wattage used must be the maximum rated for the luminaire, not the lamp.*

G. MODULAR LIGHTING SYSTEMS

This section does not apply to this project.

H. INDOOR LIGHTING CONTROLS (Not including PAFs)

*This table includes lighting controls for conditioned and unconditioned spaces. When a control having a * is shown, the notes section of this table provides more detail on how compliance is achieved. The lighting controls section of the Compliance Summary Table on the first page will show "DOES NOT COMPLY" if the notes are left blank.*

Building Level Controls

01	02	03	
Mandatory Demand Response §110.12(c)	Shut-off controls §130.1(c)	Field Inspector	
		Pass	Fail
Required > 10,000 SF	Whole Building Other	☐	☐

DOCUMENTATION AUTHOR'S DECLARATION STATEMENT

I certify that this Certificate of Compliance documentation is accurate and complete.

Documentation Author Name: Sarah Pernula	Signature: Sarah Pernula
Company: SOLDATA Energy Consulting	
Address: 2227 Capricorn Way	Signature Date: 2022-01-18
City/State/Zip: Santa Rosa CA 95407	CEA/ HERS Certification Identification (if applicable): NR16-90-20043
Phone: 707.545.4440	

RESPONSIBLE PERSON'S DECLARATION STATEMENT

I certify the following under penalty of perjury, under the laws of the State of California:
1. The information provided on this Certificate of Compliance is true and correct.
2. I am eligible under Division 3 of the Business and Professions Code to accept responsibility for the building design or system design identified on this Certificate of Compliance (responsible designer)
3. The energy features and performance specifications, materials, components, and manufactured devices for the building design or system design identified on this Certificate of Compliance conform to the requirements of Title 24, Part 1 and Part 6 of the California Code of Regulations,
4. The building design features or system design features identified on this Certificate of Compliance are consistent with the information provided on other applicable compliance documents, worksheets, calculations, plans and specifications submitted to the enforcement agency for approval with this building permit application.
5. I will ensure that a completed signed copy of this Certificate of Compliance shall be made available with the building permit(s) issued for the building, and made available to the enforcement agency for all applicable inspections. I understand that a completed signed copy of this Certificate of Compliance is required to be included with the documentation the builder provides to the building owner at occupancy.

Responsible Envelope Designer Name: Jim Theiss	Signature:	
Company: Quattrocchi Kwok Architects		
Address: 636 Fifth Street	Date Signed: 6/23/2022	
City/State/Zip: Santa Rosa CA 95404		
Phone: 707 576-0829	Title: Principal	License #: C-22643
Responsible Lighting Designer Name: Pieter Colenbrander	Signature:	
Company: O'Mahony & Myer Electrical Eng & Lighting Dsgn		
Address: 4340 Redwood Hwy, Suite 245	Date Signed: 6/23/22	
City/State/Zip: San Rafael CA 94903		
Phone: 415 492-0420	Title: Principal	License #: E14738
Responsible Mechanical Designer Name: - specify - Chris Del Core	Signature:	
Company: Costa Engineers Inc.		
Address: 3274 Villa Lane	Date Signed: 6/23/22	
City/State/Zip: Napa CA 94558		
Phone: 707-252-9177	Title: Principal	License #: M31600

K4. INDOOR CONDITIONED LIGHTING MANDATORY LIGHTING CONTROLS

Building Level Controls

1	2
Mandatory Demand Response §110.12(c)	**Shut-Off Controls §130.1(c)**
Required	Required

Area Level Controls (includes all lighting controls installed in conditioned space to meet mandatory requirements per §130.1)

4	5	6	7	8	9	10
Area Description	**Area Category Primary Function Area**	**Area Controls 130.1(a)**	**Multi-Level Controls 130.1(b)**	**Shut-Off Controls 130.1(c)**	**Primary Daylighting 130.1(d)**	**Secondary Daylighting 140.5(d)**
Classrooms	Classroom, Lecture, Training, Vocational Areas	Required	Required	Required	Required	Required
Restrooms	Restrooms	Required	Required	Required	NA	NA
Support	Electrical, Mechanical, Telephone Rooms	Required	Required	Required	NA	NA

STATE OF CALIFORNIA
Indoor Lighting
NRCC-LTI-E — CALIFORNIA ENERGY COMMISSION

CERTIFICATE OF COMPLIANCE			**NRCC-LTI-E**
Project Name:	Liberty High School Bldg A Classrooms	**Report Page:**	**(Page 4 of 7)**
Project Address:	850 2nd Street	**Date Prepared:**	1/18/2022

H. INDOOR LIGHTING CONTROLS (Not including PAFs)

Area Level Controls

04	05	06	07	08	09	10	11	12	
Area Description	Complete Building or Area Category Primary Function Area	Area Controls §130.1(a)	Multi-Level Controls §130.1(b)	Shut-Off Controls §130.1(c)	Primary/Skylit Daylighting §130.1(d)	Secondary Daylighting §140.6(d)	Interlocked Systems §140.6(a)1	Field Inspector	
								Pass	Fail
Classrooms	Classroom, Lecture, or Training Vocational Area	Manual ON/OFF	Dimmer	Occupancy Sensor	Included	Included	No	☐	☐
Restrooms	Restrooms	Manual ON/OFF	Other*	Occupancy Sensor	N/A	N/A	No	☐	☐
Support	Electrical Mechancial Telephone Room	Manual ON/OFF	Dimmer	Other	N/A	N/A	No	☐	☐

*NOTES: Controls with a * require a note in the space below explaining how compliance is achieved.
EX: Conference 1: Primary/Skylight Daylighting: Exempt because less than 120 watts of general lighting; EXCEPTION 1 to §130.1(d)2

	13
	Plan Sheet Showing Daylit Zones:
Restrooms 130.1(a)1 Exception - may be accesible to authorized personnel only	E-5.2
Support 130.1(b) < 100sf; 130.1(c) Ex 4	

I. LIGHTING POWER ALLOWANCE: COMPLETE BUILDING OR AREA CATEGORY METHODS

Each area complying using the Complete Building or Area Category Methods per §140.6(b) are included in this table. Column 06 indicates if additional lighting power allowances per §140.6(c) or adjustments per §140.6(a) are being used .

Unconditioned Spaces

01	02	03	04	05	06	
Area Description	Complete Building or Area Category Primary Function Area	Allowed Density (W/ft²)	Area (ft²)	Allowed Wattage (Watts)	Additional Allowance / Adjustment	
					Area Category	PAF
uc A107 Fire Riser	Electrical Mechancial Telephone Room	0.4	60	24	No	No
uc A112 Machine Room	Electrical Mechancial Telephone Room	0.4	64	25.6	No	No

STATE OF CALIFORNIA
Indoor Lighting
NRCC-LTI-E — CALIFORNIA ENERGY COMMISSION

CERTIFICATE OF COMPLIANCE			**NRCC-LTI-E**
Project Name:	Liberty High School Bldg A Classrooms	**Report Page:**	**(Page 1 of 7)**
Project Address:	850 2nd Street	**Date Prepared:**	1/18/2022

This document is used to demonstrate compliance with requirements in §110.9, §110.12(c), §130.0, §130.1, §140.6 and §141.0(b)2 for indoor lighting scopes using the prescriptive path.

A. GENERAL INFORMATION

01 Project Location (city)	Brentwood	04 Total Conditioned Floor Area (ft²)	0
02 Climate Zone	12	05 Total Unconditioned Floor Area (ft²)	204
03 Occupancy Types Within Project (select all that apply):		06 # of Stories (Habitable Above Grade)	2

☒ Office ☐ Retail ☐ Warehouse ☐ Hotel/Motel ☐ School ☒ Support Areas
☐ Parking Garage ☐ High-Rise Residential ☐ Relocatable ☐ Healthcare ☐ Other (Write in) See Table I

B. PROJECT SCOPE

This table includes any lighting systems that are within the scope of the permit application and are demonstrating compliance using the prescriptive path outlined in §140.6 or §141.0(b)2 for alterations.

Scope of Work	Conditioned Spaces		Unconditioned Spaces	
01	02	03	04	05
My Project Consists of (check all that apply):	Calculation Method	Area (ft²)	Calculation Method	Area (ft²)
☒ New Lighting System	Area Category Method	0	Area Category Method	204
☐ New Lighting System - Parking Garage				
Total Area of Work (ft²)	0		204	

L. DECLARATION OF REQUIRED CERTIFICATES OF INSTALLATION

Table Instructions: Selections shall be made by Documentation Author to indicate which Certificates of Installation must be submitted for the features to be recognized for compliance. These documents must be retained and provided to the building inspector during construction and can be found online at: https://www.energy.ca.gov/title24/2019standards/2019_compliance_documents/Nonresidential_Documents/NRCI/

Building Component	Form/Title
Envelope	NRCI-ENV-01-E - Must be submitted for all buildings
Mechanical	NRCI-MCH-01-E - Must be submitted for all buildings
Indoor Lighting	NRCI-LTI-01-E - Must be submitted for all buildings
	NRCI-LTI-02-E - Must be submitted for a lighting control system, or for an Energy Management Control System (EMCS) to be recognized for compliance
Covered Process	NRCI-PRC-01-E - Must be submitted for all Covered Processes

STATE OF CALIFORNIA
Indoor Lighting
NRCC-LTI-E — CALIFORNIA ENERGY COMMISSION

CERTIFICATE OF COMPLIANCE			**NRCC-LTI-E**
Project Name:	Liberty High School Bldg A Classrooms	**Report Page:**	**(Page 5 of 7)**
Project Address:	850 2nd Street	**Date Prepared:**	1/18/2022

I. LIGHTING POWER ALLOWANCE: COMPLETE BUILDING OR AREA CATEGORY METHODS

uc A113 Elevator	Electrical Mechancial Telephone Room	0.4	80	32	No	No
		TOTALS:	204	81.6	See Tables J, or P for detail	

J. ADDITIONAL ALLOWANCE: AREA CATEGORY METHOD QUALIFYING LIGHTING SYSTEM

This section does not apply to this project.

K. TAILORED METHOD GENERAL LIGHTING POWER ALLOWANCE

This section does not apply to this project.

L. ADDITIONAL LIGHTING ALLOWANCE: TAILORED WALL DISPLAY

This section does not apply to this project.

M. ADDITIONAL LIGHTING ALLOWANCE: TAILORED FLOOR AND TASK LIGHTING

This section does not apply to this project.

N. ADDITIONAL LIGHTING ALLOWANCE: TAILORED ORNAMENTAL/SPECIAL EFFECTS

This section does not apply to this project.

O. ADDITIONAL LIGHTING ALLOWANCE: TAILORED VERY VALUABLE MERCHANDISE

This section does not apply to this project.

P. POWER ADJUSTMENT: LIGHTING CONTROL CREDIT (POWER ADJUSTMENT FACTOR (PAF))

This section does not apply to this project.

Q. RATED POWER REDUCTION COMPLIANCE FOR ALTERATIONS

This section does not apply to this project.

R. 80% LIGHTING POWER FOR ALL ALTERATIONS - CONTROLS EXCEPTIONS

This section does not apply to this project.

STATE OF CALIFORNIA
Indoor Lighting
NRCC-LTI-E — CALIFORNIA ENERGY COMMISSION

CERTIFICATE OF COMPLIANCE			**NRCC-LTI-E**
Project Name:	Liberty High School Bldg A Classrooms	**Report Page:**	**(Page 2 of 7)**
Project Address:	850 2nd Street	**Date Prepared:**	1/18/2022

C. COMPLIANCE RESULTS

If any cell on this table says "DOES NOT COMPLY" or "COMPLIES with Exceptional Conditions" refer to Table D. for guidance.

Lighting in conditioned and unconditioned spaces must not be combined for compliance per §140.6(b)1	Allowed Lighting Power per §140.6(b) (Watts)						Adjusted Lighting Power per §140.6(a) (Watts)				Compliance Results
	01	02	03	04		05		06	07		08	09
	Complete Building §140.6(c)1	Area Category §140.6(c)2	Area Category Additional §140.6(c)2G (+)	Tailored §140.6(c)3 (+)	=	**Total Allowed** (Watts)	≥	Total Designed (Watts)	Adjustments: PAF Lighting Control Credits §140.6(a)2 (-)	=	**Total Adjusted** (Watts) *Includes Adjustments	**05 must be >= 08 §140.6**
	(See Table I)	(See Table I)	(See Table J)	(See Table K)				(See Table F)	(See Table P)			
Conditioned					=		≥			=		
Unconditioned		81.6	0		=	82	≥	20	0	=	20	COMPLIES
Controls Compliance (See Table H for Details)												COMPLIES
Rated Power Reduction Compliance (See Table Q for Details)												

D. EXCEPTIONAL CONDITIONS

This table is auto-filled with uneditable comments because of selections made or data entered in tables throughout the form.

E. ADDITIONAL REMARKS

This table includes remarks made by the permit applicant to the Authority Having Jurisdiction.

F. INDOOR LIGHTING FIXTURE SCHEDULE

This table includes all permanent designed lighting and all portable lighting in offices.

Designed Wattage: Unconditioned Spaces

01	02	03	04	05	06	07	08	09	10	
Name or Item Tag	Complete Luminaire Description	Modular (Track) Fixture	Small Aperture & Color Change[1]	Watts per luminaire[2]	How is Wattage determined	Total Number of Luminaires	Excluded per §140.6(a)3	Design Watts	Field Inspector	
									Pass	Fail
AC1	AC1 4' Striplight 20w LED	No	No	20	Mfr. Spec	1	No	20	☐	☐
AC1	AC1 4' Striplight 20w LED	No	No	20	Mfr. Spec	2	Yes	---	☐	☐

M. DECLARATION OF REQUIRED CERTIFICATES OF ACCEPTANCE

Table Instructions: Selections shall be made by Documentation Author to indicate which Certificates of Acceptance must be submitted for the features to be recognized for compliance. These documents must be provided to the building inspector during construction and must be completed through an Acceptance Test Technician Certification Provider (ATTCP). For more information visit:https://www.energy.ca.gov/title24/2019standards/2019_compliance_documents/Nonresidential_Documents/NRCA/

Building Component	Form/Title
Envelope	NRCA-ENV-02-F - NRFC label verification for fenestration
Indoor Lighting	NRCA-LTI-02-A - Occupancy Sensors and Automatic Time Switch Controls
	NRCA-LTI-03-A - Automatic Daylight Controls
	NRCA-LTI-04-A - Demand Responsive Lighting Controls
Covered Process	NRCA-PRC-12-F – Elevator Lighting and Ventilation Controls
Mechanical	NRCA-MCH-02-A Outdoor Air must be submitted for all newly installed HVAC units. Note: MCH02-A can be performed in conjunction with MCH-07-A Supply Fan VFD Acceptance (if applicable) since testing activities overlap
	NRCA-MCH-03-A Constant Volume Single Zone HVAC
	NRCA-MCH-05-A Air Economizer Controls
	NRCA-MCH-06-A Demand Control Ventilation Systems Acceptance must be submitted for all systems required to employ demand controlled ventilation (refer to §120.1(c)3) can vary outside ventilation flow rates based on maintaining interior carbon dioxide (CO2) concentration setpoints
	NRCA-MCH-19 Occupancy Sensor Controls

IDENTIFICATION STAMP
DIV. OF THE STATE ARCHITECT
APP: 01-119994 INC:
REVIEWED FOR
SS ☑ FLS ☑ ACS ☑
DATE: 08/16/2022

QUATTROCCHI KWOK ARCHITECTS
Main:
636 Fifth Street, Santa Rosa, CA 95404
East Bay:
55 Harrison Street, Suite 525,
Oakland, CA 94607
(707) 576-0829

LICENSED ARCHITECT
JIM THEISS
LICENSE # C22643
EXP JUNE 30, 2023
STATE OF CALIFORNIA
SIGNED: JUNE 24, 2022

LIBERTY HIGH SCHOOL

NEW CLASSROOM BUILDINGS

850 2ND STREET
BRENTWOOD, CA
94513

LIBERTY UNION HIGH SCHOOL DISTRICT

DSA APP NO. 01-119994
ARCH PROJECT NO: 1925.00
DRAWN BY:
DRAWING SCALE:
PTN: 61721-83 FILE NO: 7-H4
CONSTRUCTION DOCUMENTS
JUNE 24, 2022
SHEET TITLE

TITLE 24

SHEET NUMBER

T-A1.3

BIMcloud: archiserver - BIMcloud Basic for ARCHICAD 22/1925.00 Liberty HS Classroom, BLDG A, AC22 6/28/2022 4:19 PM

STATE OF CALIFORNIA
Outdoor Lighting
NRCC-LTO-E — CALIFORNIA ENERGY COMMISSION

CERTIFICATE OF COMPLIANCE			**NRCC-LTO-E**
Project Name:	Liberty High School Bldg A Classrooms	**Report Page:**	**(Page 5 of 7)**
Project Address:	850 2nd Street	**Date Prepared:**	1/18/2022

I. LIGHTING POWER ALLOWANCE (per §140.7)

This table includes areas using allowance calculations per §140.7. General Hardscape Allowance is per Table 140.7-A while "Use it or lose it" Allowances are per Table 140.7-B. Indicate which allowances are being used to expand sections for user input. Luminaires that qualify for one of the "Use it or lose it" allowances shall not qualify for another "Use it or lose it" allowance.	01			
	☒ General Hardscape Allowance Table I (below)	"Use it or lose it" Allowance (select all that apply) (select all that apply)		
		☐ Per Application Table J	☐ Sales Frontage Table K	☐ Ornamental Table L	☐ Per Specific Area Table M

Calculated General Hardscape Lighting Power Allowance per Table 140.7-A (LZ 0, 1 & 4)
This section does not apply to this project.
Calculated General Hardscape Lighting Power Allowance per Table 140.7-A (LZ 2 & 3)

02	03	04	05	06	07	08	9	10
Area Description	Surface Type	Area Wattage Allowance (AWA)			Area Wattage Allowance (AWA)			Total General AWA + LWA (Watts)
		Illuminated Area (ft²)	Allowed Density (W/ft²)	Area Allowance (Watts)	Perimeter Length (lf)	Allowed Density (W/lf)	Linear Allowance (Watts)	
Pedestrian Hardscape	Concrete	31500	0.03	945	630	0.4	252	1197
Initial Wattage Allowance for Entire Site (Watts):								350
Total General Hardscape Allowance (Watts):								1547

J. LIGHTING ALLOWANCE: PER APPLICATION
This section does not apply to this project.

K. LIGHTING ALLOWANCE: SALES FRONTAGE
This section does not apply to this project.

L. LIGHTING ALLOWANCE: ORNAMENTAL
This section does not apply to this project.

M. LIGHTING ALLOWANCE: PER SPECIFIC AREA
This section does not apply to this project.

STATE OF CALIFORNIA
Outdoor Lighting
NRCC-LTO-E — CALIFORNIA ENERGY COMMISSION

CERTIFICATE OF COMPLIANCE			**NRCC-LTO-E**
Project Name:	Liberty High School Bldg A Classrooms	**Report Page:**	**(Page 2 of 7)**
Project Address:	850 2nd Street	**Date Prepared:**	1/18/2022

C. COMPLIANCE RESULTS
Results in this table are automatically calculated from data input and calculations in Tables F through I. Note: If any cell on this table says "COMPLIES with Exceptional Conditions" refer to Table D. Exceptional Conditions for guidance or see applicable Table referenced below.

Calculations of Total Allowed Lighting Power (Watts) §140.7 or §141.0(b)2L											Compliance Results		
01	+	02	+	03	+	04	+	05	OR	06	=	07	≥	08	09
General Hardscape Allowance §140.7(d)1 (See Table I)		Per Application §140.7(d)2 (See Table J)		Sales Frontage §140.7(d)2 (See Table K)		Ornamental §140.7(d)2 (See Table L)		Per Specific Area §140.7(d)2 (See Table M)		Existing Power Allowance §141.0(b)2L (See Table N)		**Total Allowed** (Watts)		**Total Actual** (Watts)	**07 must be >= 08**
1,547	+	---	+	---	+	---	+	---	OR	---	=	1,547	≥	1,291	COMPLIES
Cutoff Compliance (See Table G for Details)															N/A
Controls Compliance (See Table H for Details)															COMPLIES

D. EXCEPTIONAL CONDITIONS
This table is auto-filled with uneditable comments because of selections made or data entered in tables throughout the form.

E. ADDITIONAL REMARKS
This table includes remarks made by the permit applicant to the Authority Having Jurisdiction.

STATE OF CALIFORNIA
Indoor Lighting
NRCC-LTI-E — CALIFORNIA ENERGY COMMISSION

CERTIFICATE OF COMPLIANCE			**NRCC-LTI-E**
Project Name:	Liberty High School Bldg A Classrooms	**Report Page:**	**(Page 6 of 7)**
Project Address:	850 2nd Street	**Date Prepared:**	1/18/2022

S. DAYLIGHT DESIGN POWER ADJUSTMENT FACTOR (PAF)
This section does not apply to this project.

T. DECLARATION OF REQUIRED CERTIFICATES OF INSTALLATION
Selections have been made based on information provided in this document. If any selection have been changed by permit applicant, an explanation should be included in Table E. Additional Remarks. These documents must be provided to the building inspector during construction and can be found online at https://www.energy.ca.gov/title24/2019standards/2019_compliance_documents/Nonresidential_Documents/NRCI/

Yes	No	Form/Title	Field Inspector Pass	Field Inspector Fail
●	○	NRCI-LTI-01-E - Must be submitted for all buildings	☐	☐
●	○	NRCI-LTI-02-E- Must be submitted for a lighting control system, or for an Energy Management Control System (EMCS), to be recognized for compliance.	☐	☐
○	●	NRCI-LTI-04-E - Must be submitted for two interlocked systems serving an auditorium, a convention center, a conference room, a multipurpose room or a theater to be recognized for compliance.	☐	☐
○	●	NRCI-LTI-05-E- Must be submitted for a Power Adjustment Factor (PAF) to be recognized for compliance.	☐	☐
○	●	NRCI-LTI-06-E- Must be submitted for additional wattage installed in a video conferencing studio to be recognized for compliance.	☐	☐

U. DECLARATION OF REQUIRED CERTIFICATES OF ACCEPTANCE
Selections have been made based on information provided in this document. If any selection have been changed by the permit applicant, an explanation should be included in Table E. Additional Remarks. These documents must be provided to the building inspector during construction and any with "-A" in the form name must be completed through an Acceptance Test Technician Certification Provider (ATTCP). For more information visit: http://www.energy.ca.gov/title24/attcp/providers.html

Yes	No	Form/Title	Field Inspector Pass	Field Inspector Fail
●	○	NRCA-LTI-02-A - Must be submitted for occupancy sensors and automatic time switch controls.	☐	☐
●	○	NRCA-LTI-03-A - Must be submitted for automatic daylight controls.	☐	☐
●	○	NRCA-LTI-04-A - Must be submitted for demand responsive lighting controls.	☐	☐
○	●	NRCA-LTI-05-A. - Must be submitted for institutional tuning power adjustment factor (PAF)	☐	☐

STATE OF CALIFORNIA
Outdoor Lighting
NRCC-LTO-E — CALIFORNIA ENERGY COMMISSION

CERTIFICATE OF COMPLIANCE			**NRCC-LTO-E**
Project Name:	Liberty High School Bldg A Classrooms	**Report Page:**	**(Page 6 of 7)**
Project Address:	850 2nd Street	**Date Prepared:**	1/18/2022

N. EXISTING CONDITIONS POWER ALLOWANCE (alterations only)
This section does not apply to this project.

O. DECLARATION OF REQUIRED CERTIFICATES OF INSTALLATION
Selections have been made based on information provided in this document. If any selection have been changed by permit applicant, an explanation should be included in Table E. Additional Remarks. These documents must be provided to the building inspector during construction and can be found online at https://www.energy.ca.gov/title24/2019standards/2019_compliance_documents/Nonresidential_Documents/NRCI/

Yes	No	Form/Title	Field Inspector Pass	Field Inspector Fail
●	○	NRCI-LTO-01-E - Must be submitted for all buildings	☐	☐
●	○	NRCI-LTO-02-E- Must be submitted for a lighting control system, or for an Energy Management Control System (EMCS), to be recognized for compliance.	☐	☐

P. DECLARATION OF REQUIRED CERTIFICATES OF ACCEPTANCE
Selections have been made based on information provided in this document. If any selection have been changed by permit applicant, an explanation should be included in Table E. Additional Remarks. These documents must be provided to the building inspector during construction and must be completed through an Acceptance Test Technician Certification Provider (ATTCP). For more information visit: http://www.energy.ca.gov/title24/attcp/providers.html

Yes	No	Form/Title	Field Inspector Pass	Field Inspector Fail
●	○	NRCA-LTO-02-A - Must be submitted for all outdoor lighting controls except for alterations where controls are added to <= 20 luminaires.	☐	☐

STATE OF CALIFORNIA
Outdoor Lighting
NRCC-LTO-E — CALIFORNIA ENERGY COMMISSION

CERTIFICATE OF COMPLIANCE			**NRCC-LTO-E**
Project Name:	Liberty High School Bldg A Classrooms	**Report Page:**	**(Page 3 of 7)**
Project Address:	850 2nd Street	**Date Prepared:**	1/18/2022

F. OUTDOOR LIGHTING FIXTURE SCHEDULE
For new or altered lighting systems demonstrating compliance with §140.7 all new luminaires being installed and any existing luminaires remaining or being moved within the spaces covered by the permit application are included in the Table below. For altered lighting systems using the Existing Power method per §141.0(b)2L only new luminaires being installed and replacement luminaires being installed as part of the project scope are included (ie, existing luminaires remaining or existing luminaires being moved are not included).

Designed Wattage:

01	02		03	04	05	06	07	08	09	10	
Name or Item Tag	Complete Luminaire Description		Watts per luminaire[1, 2]	How is Wattage determined	Total number luminaires [2]	Luminaire Status[3]	Excluded per §140.7(a)	Design Watts	Cutoff Req. > 6,200 initial lumen output §130.2(b) [4]	Field Inspector	
										Pass	Fail
BA1	BA1 Downlight 20w LED	☐ Linear	20	Mfr. Spec	39	New	☐	780	NA: < 6200 lumens	☐	☐
BB1	BB1 Wallwash 18w LED	☐ Linear	18	Mfr. Spec	2	New	☐	36	NA: < 6200 lumens	☐	☐
BC1	BC1 Wall Sconce 25w LED	☐ Linear	25	Mfr. Spec	10	New	☐	250	NA: < 6200 lumens	☐	☐
BC2	BC2 Wall Sconce 25w LED	☐ Linear	25	Mfr. Spec	9	New	☐	225	NA: < 6200 lumens	☐	☐
Total Design Watts:								1291			

** NOTES: Selections with a * require a note in the space below explaining how compliance is achieved.*
EX: Luminaire is lighting a statue; EXCEPTION 2 to §130.2(b)

[1] FOOTNOTES: Authority Having Jurisdiction may ask for Luminaire cut sheets to confirm wattage used for compliance per §130.0(c)
[2] For linear luminaires, wattage should be indicated as W/lf instead of Watts/luminaire. Total linear feet should be indicated in column 05 instead of number of luminaires.
[3] Select "New" for new luminaires in a new outdoor lighting project, or for added luminaires in an alteration. Select "Altered" for replacement luminaires in an alteration. Select "Existing to Remain" for existing luminaires within the project scope that are not being altered and are remaining. Select "Existing Reinstalled" for existing luminaires which are being removed and reinstalled as part of the project scope.
[4] Compliance with mandatory cutoff requirements is required for luminaires with initial lumen output >= 6,200 unless exempted by §130.2(b)

G. CUTOFF REQUIREMENTS (BUG)
This section does not apply to this project.

STATE OF CALIFORNIA
Indoor Lighting
NRCC-LTI-E — CALIFORNIA ENERGY COMMISSION

CERTIFICATE OF COMPLIANCE			**NRCC-LTI-E**
Project Name:	Liberty High School Bldg A Classrooms	**Report Page:**	**(Page 7 of 7)**
Project Address:	850 2nd Street	**Date Prepared:**	1/18/2022

DOCUMENTATION AUTHOR'S DECLARATION STATEMENT
I certify that this Certificate of Compliance documentation is accurate and complete.

Documentation Author Name: Sarah Pernula	Documentation Author Signature: Sarah Pernula
Company: SOLDATA Energy Consulting	Signature Date: 2022-01-18
Address: 2227 Capricorn Way	CEA/ HERS Certification Identification (if applicable): NR16-90-20043
City/State/Zip: Santa Rosa CA 95407	Phone: 707.545.4440

RESPONSIBLE PERSON'S DECLARATION STATEMENT
I certify the following under penalty of perjury, under the laws of the State of California:
1. The information provided on this Certificate of Compliance is true and correct.
2. I am eligible under Division 3 of the Business and Professions Code to accept responsibility for the building design or system design identified on this Certificate of Compliance (responsible designer)
3. The energy features and performance specifications, materials, components, and manufactured devices for the building design or system design identified on this Certificate of Compliance conform to the requirements of Title 24, Part 1 and Part 6 of the California Code of Regulations.
4. The building design features or system design features identified on this Certificate of Compliance are consistent with the information provided on other applicable compliance documents, worksheets, calculations, plans and specifications submitted to the enforcement agency for approval with this building permit application.
5. I will ensure that a completed signed copy of this Certificate of Compliance shall be made available with the building permit(s) issued for the building, and made available to the enforcement agency for all applicable inspections. I understand that a completed signed copy of this Certificate of Compliance is required to be included with the documentation the builder provides to the building owner at occupancy.

Responsible Designer Name: Pieter Colenbrander	Responsible Designer Signature: P. Colenbrander
Company: O'Mahony & Myer Electrical Eng & Lighting Dsgn	Date Signed: 2022-01-18
Address: 4340 Redwood Hwy, Suite 245	License: E14738
City/State/Zip: San Rafael CA 94903	Phone: 415 492-0420

STATE OF CALIFORNIA
Outdoor Lighting
NRCC-LTO-E — CALIFORNIA ENERGY COMMISSION

CERTIFICATE OF COMPLIANCE			**NRCC-LTO-E**
Project Name:	Liberty High School Bldg A Classrooms	**Report Page:**	**(Page 7 of 7)**
Project Address:	850 2nd Street	**Date Prepared:**	1/18/2022

DOCUMENTATION AUTHOR'S DECLARATION STATEMENT
I certify that this Certificate of Compliance documentation is accurate and complete.

Documentation Author Name: Sarah Pernula	Documentation Author Signature: Sarah Pernula
Company: SOLDATA Energy Consulting	Signature Date: 2022-01-18
Address: 2227 Capricorn Way	CEA/ HERS Certification Identification (if applicable): NR16-90-20043
City/State/Zip: Santa Rosa CA 95407	Phone: 707.545.4440

RESPONSIBLE PERSON'S DECLARATION STATEMENT
I certify the following under penalty of perjury, under the laws of the State of California:
1. The information provided on this Certificate of Compliance is true and correct.
2. I am eligible under Division 3 of the Business and Professions Code to accept responsibility for the building design or system design identified on this Certificate of Compliance (responsible designer)
3. The energy features and performance specifications, materials, components, and manufactured devices for the building design or system design identified on this Certificate of Compliance conform to the requirements of Title 24, Part 1 and Part 6 of the California Code of Regulations.
4. The building design features or system design features identified on this Certificate of Compliance are consistent with the information provided on other applicable compliance documents, worksheets, calculations, plans and specifications submitted to the enforcement agency for approval with this building permit application.
5. I will ensure that a completed signed copy of this Certificate of Compliance shall be made available with the building permit(s) issued for the building, and made available to the enforcement agency for all applicable inspections. I understand that a completed signed copy of this Certificate of Compliance is required to be included with the documentation the builder provides to the building owner at occupancy.

Responsible Designer Name: Pieter Colenbrander	Responsible Designer Signature: P. Colenbrander
Company: O'Mahony & Myer Electrical Eng & Lighting Dsgn	Date Signed: 2022-01-18
Address: 4340 Redwood Hwy, Suite 245	License: E14738
City/State/Zip: San Rafael CA 94903	Phone: 415 492-0420

STATE OF CALIFORNIA
Outdoor Lighting
NRCC-LTO-E — CALIFORNIA ENERGY COMMISSION

CERTIFICATE OF COMPLIANCE			**NRCC-LTO-E**
Project Name:	Liberty High School Bldg A Classrooms	**Report Page:**	**(Page 4 of 7)**
Project Address:	850 2nd Street	**Date Prepared:**	1/18/2022

H. OUTDOOR LIGHTING CONTROLS
This table demonstrates compliance with controls requirements for all new or altered luminaires installed as part of the permit application. For alteration projects, luminaires which are existing to remain (ie untouched) and luminaires which are removed and reinstalled (wiring only) do not need to be included in this table even if they are within the spaces covered by the permit application.
*When an option having a * is selected, the notes section of this table must be completed. The lighting controls section of the Compliance Summary Table on the first page will show "DOES NOT COMPLY" if the notes are left blank.*

Mandatory Controls

01	02	03	04	05	
Area Description	Shut-Off §130.2(c)1	Auto-Schedule §130.2(c)2	Motion Sensor §130.2(c)3	Field Inspector	
				Pass	Fail
Pedestrian Hardscape	Photocontrol	Yes	Yes	☐	☐

** NOTES: Controls with a * require a note in the space below explaining how compliance is achieved.*
EX: Not permitted by health & safety to be turned off; EXCEPTION 1 to §130.2(c)

STATE OF CALIFORNIA
Outdoor Lighting
NRCC-LTO-E — CALIFORNIA ENERGY COMMISSION

CERTIFICATE OF COMPLIANCE			**NRCC-LTO-E**
Project Name:	Liberty High School Bldg A Classrooms	**Report Page:**	**(Page 1 of 7)**
Project Address:	850 2nd Street	**Date Prepared:**	1/18/2022

A. GENERAL INFORMATION

01	Project Location (city)	Brentwood	04 Total Illuminated Hardscape Area (ft²)	31500
02	Climate Zone	12		
03	Outdoor Lighting Zone per Title 24 Part 1 §10.114 or as designated by Authority Having Jurisdiction (AHJ):			
☐	LZ-0: Very Low - Undeveloped Parkland	☐ LZ-2: Moderate - Rural Areas	☐ LZ-4: High - Must be reviewed by CA Energy Commission for Approval	
☐	LZ-1: Low - Developed Parkland	☒ LZ-3: Moderately High - Urban Areas		

B. PROJECT SCOPE
This table includes outdoor lighting systems that are within the scope of the permit application and are demonstrating compliance using the prescriptive path outlined in §140.7 or §141.0(b)2L for alterations.

My Project Consists of:

01	02	
☒ New Lighting System	Must Comply with Allowances from §140.7	
☐ Altered Lighting System	Is your alteration increasing the connected lighting load (Watts)? ○ Yes ○ No	
03	04	05
% of Existing Luminaires Being Altered[1]	Sum Total of Luminaires Being Added or Altered	Calculation Method
☐ < 10% ☐ >= 10% and < 50% ☐ >= 50%		

Please proceed to Table F. Outdoor Lighting Fixture Schedule to define the project's luminaires.

[1] FOOTNOTES: % of Existing Luminaires Being Altered = (Sum Total of Luminaires Being Added or Altered / Existing Luminaires within the Scope of the Permit Application) x 100.

IDENTIFICATION STAMP
DIV. OF THE STATE ARCHITECT
APP: 01-119994 INC:
REVIEWED FOR
SS ☑ FLS ☑ ACS ☑
DATE: 08/16/2022

QUATTROCCHI KWOK ARCHITECTS
Main:
636 Fifth Street, Santa Rosa, CA 95404
East Bay:
55 Harrison Street, Suite 525, Oakland, CA 94607
(707) 576-0829

LICENSED ARCHITECT
JIM THEISS
LICENSE # C22643
EXP JUNE 30, 2023
STATE OF CALIFORNIA
SIGNED: JUNE 24, 2022

LIBERTY HIGH SCHOOL

NEW CLASSROOM BUILDINGS

850 2ND STREET
BRENTWOOD, CA
94513

LIBERTY UNION HIGH SCHOOL DISTRICT

DSA APP NO. 01-119994
ARCH PROJECT NO: 1925.00
DRAWN BY:
DRAWING SCALE:
PTN: 61721-83 FILE NO: 7-H4
CONSTRUCTION DOCUMENTS
JUNE 24, 2022
SHEET TITLE

TITLE 24

SHEET NUMBER
T-A1.4

BIMcloud: archiserver - BIMcloud Basic for ARCHICAD 22/1925.00 Liberty HS Classroom_BLDG A_AC22.6/28/2022-4:19 PM

STATE OF CALIFORNIA
Solar Ready Areas
NRCC-SRA-E — CALIFORNIA ENERGY COMMISSION

CERTIFICATE OF COMPLIANCE			NRCC-SRA-E
Project Name:	Liberty High School Bldg A Classrooms	**Report Page:**	**(Page 4 of 5)**
Project Address:	850 2nd Street	**Date Prepared:**	1/18/2022

Interconnection Pathways	
Location in construction documents showing the location for inverters and metering equipment and a pathway for the routing of conduit/ plumbing to the electrical service/ water heating system per §110.10(c).	A-B4.1
FOOTNOTE: This field is used to document how the percentage of annual solar access was determined per §110.10(b)1B. Solar access is the ratio of solar insolation including shade to the solar insolation without shade. Shading from obstructions located on the roof or any other part of the building shall not be included in the determination of annual solar access.	

G. PERMANENTLY INSTALLED SOLAR PHOTOVOLTAIC (PV) SYSTEM

This section does not apply to this project.

H. PERMANENTLY INSTALLED SOLAR HOT WATER SYSTEMS

This section does not apply to this project.

I. SMART THERMOSTATS AND ALTERNATIVE EFFICIENCY MEASURE

This section does not apply to this project.

J. DECLARATION OF REQUIRED CERTIFICATES OF INSTALLATION

Selections have been made based on information provided in this document. If any selections have been changed by the permit applicant, an explanation should be included Table E. Remarks. These documents must be provided to the building inspector during construction and can be found online at https://www.energy.ca.gov/title24/2019standards/2019_compliance_documents/Nonresidential_Documents/NRCI/

Yes	No	Form/Title	Field Inspector Pass	Field Inspector Fail
○	●	NRCI-SPV-01-E - Must be submitted for all newly installed Photovoltaic Systems (PV) being used to comply with §110.10(b)1B for high-rise multifamily, Hotel/Motel buildings less than 10 stories and nonresidential buildings less than 4 stories.	☐	☐
○	●	NRCI-STH-01-E - Must be submitted for all newly installed Solar Water Heating systems being used to comply with §110.10(b)1B for high-rise multifamily, Hotel/Motel buildings less than 10 stories and nonresidential buildings less than 4 stories.	☐	☐

K. DECLARATION OF REQUIRED CERTIFICATES OF ACCEPTANCE

There are no Certificates of Acceptance applicable to solar ready requirements.

Registration Number: | Registration Date/Time: | Registration Provider: Energysoft

CA Building Energy Efficiency Standards - 2019 Nonresidential Compliance | Report Version: 2019.1.003 Schema Version: rev 20200601 | Report Generated: 2022-01-18 10:34:37

STATE OF CALIFORNIA
Solar Ready Areas
NRCC-SRA-E — CALIFORNIA ENERGY COMMISSION

CERTIFICATE OF COMPLIANCE			NRCC-SRA-E
Project Name:	Liberty High School Bldg A Classrooms	**Report Page:**	**(Page 1 of 5)**
Project Address:	850 2nd Street	**Date Prepared:**	1/18/2022

This document is used to demonstrate compliance with mandatory requirements in §110.10 for newly constructed buildings which are either high-rise multifamily ten stories or fewer, hotel/motel ten stories or fewer or all other nonresidential buildings three stories or fewer. It is also used to demonstrate compliance with additions to these building types which add more than 2,000 ft² of roof area. Alterations or additions of less than 2,000ft² are not required to comply with §110.10.

A. GENERAL INFORMATION

01	Project Location (city)	Brentwood	04	Building Type	Other nonresidential bldg 3 stories or fewer
02	Climate Zone	12	05	Construction Type	New Construction
03	☐ Roof is designed for vehicle traffic, parking or for heliport				
03a	Plan sheet showing roof design for vehicle traffic, parking or heliport exception:				

B. PROJECT SCOPE

The compliance path the project is using to comply per §110.10(b)1B is indicated below.

My project consists of (check one):

1		
☒	Provide Solar Ready Area no exceptions	The project has allocated a solar zone on the roof plan per requirements in §110.10(b), as documented in Table F.
☐	Exception to Solar Ready Area: Installed Solar Photovoltaic System	The project includes a permanently installed solar electric system having a nameplate DC power rating, measured under Standard Test Conditions, of no less than one watt per square foot of roof area as documented in Table G.
	Exception to Solar Ready Area: Installed Solar Water Heating System	The project is a hotel/motel or high-rise multifamily occupancy and includes a permanently installed domestic solar water-heating system complying with §150.1(c)8Biii and Reference Residential Appendix RA4, as documented in Table H.
	Exception to Solar Ready Area: Smart Thermostat and Alternative Energy Efficiency Measure	The project is a high-rise multifamily occupancy where all thermostats in each dwelling unit comply with §110.12(a) AND at least one additional measure listed in Exception 4 to §110.10(b)1B is installed, as documented in Table I.

Registration Number: | Registration Date/Time: | Registration Provider: Energysoft

CA Building Energy Efficiency Standards - 2019 Nonresidential Compliance | Report Version: 2019.1.003 Schema Version: rev 20200601 | Report Generated: 2022-01-18 10:34:37

STATE OF CALIFORNIA
Solar Ready Areas
NRCC-SRA-E — CALIFORNIA ENERGY COMMISSION

CERTIFICATE OF COMPLIANCE			NRCC-SRA-E
Project Name:	Liberty High School Bldg A Classrooms	**Report Page:**	**(Page 5 of 5)**
Project Address:	850 2nd Street	**Date Prepared:**	1/18/2022

DOCUMENTATION AUTHOR'S DECLARATION STATEMENT

I certify that this Certificate of Compliance documentation is accurate and complete.

Documentation Author Name: Sarah Pernula	Documentation Author Signature: Sarah Pernula
Company: SOLDATA Energy Consulting	Signature Date: 2022-01-18
Address: 2227 Capricorn Way	CEA/ HERS Certification Identification (if applicable): NR16-90-20043
City/State/Zip: Santa Rosa CA 95407	Phone: 707.545.4440

RESPONSIBLE PERSON'S DECLARATION STATEMENT

I certify the following under penalty of perjury, under the laws of the State of California:

1. The information provided on this Certificate of Compliance is true and correct.
2. I am eligible under Division 3 of the Business and Professions Code to accept responsibility for the building design or system design identified on this Certificate of Compliance (responsible designer)
3. The energy features and performance specifications, materials, components, and manufactured devices for the building design or system design identified on this Certificate of Compliance conform to the requirements of Title 24, Part 1 and Part 6 of the California Code of Regulations.
4. The building design features or system design features identified on this Certificate of Compliance are consistent with the information provided on other applicable compliance documents, worksheets, calculations, plans and specifications submitted to the enforcement agency for approval with this building permit application.
5. I will ensure that a completed signed copy of this Certificate of Compliance shall be made available with the building permit(s) issued for the building, and made available to the enforcement agency for all applicable inspections. I understand that a completed signed copy of this Certificate of Compliance is required to be included with the documentation the builder provides to the building owner at occupancy.

Responsible Designer Name: Jim Theiss	Responsible Designer Signature: Jim Theiss
Company: Quattrocchi Kwok Architects	Date Signed: 2022-01-18
Address: 636 Fifth Street	License: C-22643
City/State/Zip: Santa Rosa CA 95404	Phone: 707 576-0829

Registration Number: | Registration Date/Time: | Registration Provider: Energysoft

CA Building Energy Efficiency Standards - 2019 Nonresidential Compliance | Report Version: 2019.1.003 Schema Version: rev 20200601 | Report Generated: 2022-01-18 10:34:37

STATE OF CALIFORNIA
Solar Ready Areas
NRCC-SRA-E — CALIFORNIA ENERGY COMMISSION

CERTIFICATE OF COMPLIANCE			NRCC-SRA-E
Project Name:	Liberty High School Bldg A Classrooms	**Report Page:**	**(Page 2 of 5)**
Project Address:	850 2nd Street	**Date Prepared:**	1/18/2022

C. COMPLIANCE RESULTS

Results in this table are automatically calculated from data input and calculations in Tables F through I. Note: If any cell on this table says "DOES NOT COMPLY" or "COMPLIES with Exceptional Conditions" refer to Table D. for guidance or see the applicable Table referenced below.

Allocated Solar Zone 01	<=	02	OR	Installed PV System 03	<=	04	OR	Installed SWH System 05	<=	06	OR	Smart Tstat and Alternative EE Measure 07	08	09
Required Minimum Area (ft²)	<=	Designated Area (ft²)	OR	Required Minimum DC Power Rating (Watts)	<=	Designed DC Power Rating (Watts)	OR	Required Minimum Solar Savings Fraction	<=	Designed/Rated Solar Savings Fraction	OR	JA5 Compliant Thermostat Specified?	Alternative Energy Efficiency Measure	
(See Table F)				(See Table G)				(See Table H)				(See Table I)		COMPLIES
1209	<=	1300	OR				OR				OR			
A-B4.1				Location within the construction documents showing the location for inverters and metering equipment and a pathway for the routing of conduit/plumbing to the electrical service/ water heating system per §110.10(c).										COMPLIES

D. EXCEPTIONAL CONDITIONS

This table is auto-filled with uneditable comments because of selections made or data entered in tables throughout the form.

E. ADDITIONAL REMARKS

This table is includes remarks made by the permit applicant to the Authority Having Jurisdiction.

Registration Number: | Registration Date/Time: | Registration Provider: Energysoft

CA Building Energy Efficiency Standards - 2019 Nonresidential Compliance | Report Version: 2019.1.003 Schema Version: rev 20200601 | Report Generated: 2022-01-18 10:34:37

STATE OF CALIFORNIA
Solar Ready Areas
NRCC-SRA-E — CALIFORNIA ENERGY COMMISSION

CERTIFICATE OF COMPLIANCE			NRCC-SRA-E
Project Name:	Liberty High School Bldg A Classrooms	**Report Page:**	**(Page 3 of 5)**
Project Address:	850 2nd Street	**Date Prepared:**	1/18/2022

F. ALLOCATED SOLAR ZONE

This table is completed if the project is designating a solar zone to comply with §110.10(b)1B. New construction consider the total roof area; Additions consider newly added roof area. This table demonstrates that the project has designated the minimum area required for the Allocated Solar Zone, and also that the requirements for Solar Zone Subareas have been met. Each subarea must be shown on a roof plan or documented in construction documents. The solar zones must also comply with fire code requirements, including, but not limited to, setback and pathway requirements. Requirements for interconnection pathways must also be included in construction documents, and the location is specified in this table.

Required Minimum Solar Zone

01	02	03	04	05	06			07	08
					Potential Solar Zone Areas: Roof areas with >= 70% Solar Access				
Minimum Solar Zone Area Calculation Method	Total New or Added Roof Area (ft²)	Total New or Added Roof Area Covered with Skylights (ft²)	Minimum Solar Zone Based on Total or Added Roof Area (0.15 x (Roof-Skylt)) (ft²)	Method/ Tools Used to Determine Annual Solar Access for Potential Zones[1]	Low-Sloped Area (<= 2:12 pitch) (ft²)	Steep-Sloped Area (> 2:12 pitch) Oriented 90 ° - 300 ° (ft²)	Total Potential Solar Zone Area (ft²)	Minimum Solar Zone Based on Potential Zone (0.5 x (Total Potential Zone)) (ft²)	Required Minimum Solar Zone Area (ft²)
Total New or Added Roof Area	8060	0	1209						1209

Designated Solar Zone Subareas

09	10	11	12	13	14	15	16	17	18	19
Subarea Name or Tag	Building Plan Reference	Roof or Overhang Slope (Low <= 2:12 pitch) (Steep > 2:12 pitch)	Is Steep-Sloped Roof or Overhang between 90 and 300 degrees?	Subarea Complies with Title 24, Part 9	Solar Zone Subarea Free of Obstructions per §110.10(b)3A	Subarea is Required Distance from Potential Obstructions per §110.10(b)3B	Is the Smallest Dimension 5 feet or greater?	Min. Area Required per Subarea (ft²)	Designated Area (ft²)	Subarea Complies?
Solar Zone	Roof Plan	LowSlope	No	Yes	Yes	Yes	Yes	80	1300	COMPLIES
								Total Designated Solar Zone Area (ft²):	1300	

Registration Number: | Registration Date/Time: | Registration Provider: Energysoft

CA Building Energy Efficiency Standards - 2019 Nonresidential Compliance | Report Version: 2019.1.003 Schema Version: rev 20200601 | Report Generated: 2022-01-18 10:34:37

IDENTIFICATION STAMP
DIV. OF THE STATE ARCHITECT
APP: 01-119994 INC:
REVIEWED FOR
SS ☑ FLS ☑ ACS ☑
DATE: 08/16/2022

QUATTROCCHI KWOK ARCHITECTS
Main:
636 Fifth Street, Santa Rosa, CA 95404
East Bay:
55 Harrison Street, Suite 525, Oakland, CA 94607
(707) 576-0829

LICENSED ARCHITECT
JIM THEISS
LICENSE # C22643
EXP JUNE 30, 2023
STATE OF CALIFORNIA
SIGNED: JUNE 24, 2022

LIBERTY HIGH SCHOOL

NEW CLASSROOM BUILDINGS

850 2ND STREET
BRENTWOOD, CA
94513

LIBERTY UNION HIGH SCHOOL DISTRICT

DSA APP NO. 01-119994
ARCH PROJECT NO: 1925.00
DRAWN BY:
DRAWING SCALE:
PTN: 61721-83 FILE NO: 7-H4
CONSTRUCTION DOCUMENTS
JUNE 24, 2022
SHEET TITLE

TITLE 24

SHEET NUMBER

T-A1.5

BIMcloud: archiserver - BIMcloud Basic for ARCHICAD 22/1925.00 Liberty HS Classroom, BLDG A, AC22-6/28/2022-4:19 PM

Project Name:	Liberty High School Bldg B Science	NRCC-PRF-01-E	Page 1 of 14
Project Address:	850 2nd Street Brentwood 94513	Calculation Date/Time:	10:39, Tue, Jan 18, 2022
Input File Name:	1925.00 Liberty HS Bldg B Science Classrooms v8.2.2.cibd19x		

A. GENERAL INFORMATION

1	Project Location (city)	Brentwood	8	Standards Version	Compliance2019
2	CA Zip Code	94513	9	Compliance Software (version)	EnergyPro 8.2
3	Climate Zone	12	10	Weather File	LIVERMORE_724927_CZ2010.epw
4	Total Conditioned Floor Area in Scope	3,570 ft²	11	Building Orientation (deg)	(N) 0 deg
5	Total Unconditioned Floor Area	1,501 ft²	12	Permitted Scope of Work	NewComplete
6	Total # of Stories (Habitable Above Grade)	1	13	Building Type(s)	Nonresidential
7	Total # of dwelling units	0	14	Gas Type	NaturalGas

B. PROJECT SUMMARY

Table Instructions: Table B shows which building components are included in the performance calculation. If indicated as not included, the project must show compliance prescriptively if within permit application.

Building Components Complying via Performance					Building Components Complying Prescriptively	
Envelope (see Table G)	☒ Performance	Covered Process: Commercial Kitchens	☐ Performance		*The following building components are ONLY eligible for prescriptive compliance and should be documented on the NRCC form listed if within the scope of the permit application (i.e. compliance will not be shown on the NRCC-PRF-E).*	
	☐ Not Included		☒ Not Included			
Mechanical (see Table H)	☒ Performance	Covered Process: Computer Rooms	☐ Performance		Indoor Lighting (Unconditioned)§140.6	*NRCC-LTI-E*
	☐ Not Included		☒ Not Included		Outdoor Lighting §140.7	*NRCC-LTO-E*
Domestic Hot Water (see Table I)	☐ Performance	Covered Process: Laboratory Exhaust	☐ Performance		Sign Lighting §140.8	*NRCC -LTS-E*
	☒ Not Included		☒ Not Included		Mandatory Measures	
Lighting (Indoor Conditioned, see Table K)	☒ Performance				*Electrical power systems, commissioning, solar ready, elevator and escalator requirements are mandatory and should on the NRCC form listed if applicable (i.e. compliance will not be shown on the NRCC-PRF-E.)*	
	☐ Not Included				Electrical Power Distribution S110.11	*NRCC-ELC-E*
Solar Thermal Water Heating (see Table I)	☐ Performance				Commissioning §120.8	*NRCC-CXR-E*
	☒ Not Included				Solar Ready S110.10	*NRCC-SRA-E*

C1. COMPLIANCE RESULTS FOR PERFORMANCE COMPONENTS (Annual TDV Energy Use, kBtu/ft²-yr)

COMPLIES

Energy Component	Standard Design (TDV)	Proposed Design (TDV)	Compliance Margin (TDV)[1]
Space Heating	13.12	10.07	3.05
Space Cooling	70.40	57.48	12.92
Indoor Fans	103.11	64.62	38.49
Heat Rejection	--	--	--
Pumps & Misc.	--	--	--
Domestic Hot Water	15.27	15.27	--
Indoor Lighting	40.94	52.95	-12.01
ENERGY STANDARDS COMPLIANCE TOTAL	**242.84**	**200.39**	**42.45 (17.5%)**

[1] *Notes: The number in parenthesis following the Compliance Margin in column 4. represents the Percent Better than Standard.*

C2. RESULTS FOR 'ABOVE CODE' QUALIFICATIONS[1]

☐ This project is pursuing CalGreen Tier 1 ☐ This project is pursuing CalGreen Tier 2

Miscellaneous Energy Component	Standard Design (TDV)	Proposed Design (TDV)	Compliance Margin (TDV)[1]
Receptacle	118.73	118.73	--
Process			--
Other Ltg	22.94	22.94	--
Process Motors	13.44	17.22	-3.78
COMPLIANCE TOTAL PLUS MISCELLANEOUS COMPONENTS	**397.95**	**359.28**	**38.7 (9.7%)**

[1] *Notes: This table is used to document compliance with programs OTHER THAN Title 24 Part 6, if applicable.*

C3. ENERGY USE SUMMARY

Energy Component	Standard Design Site (MWh)	Proposed Design Site (MWh)	Margin (MWh)	Standard Design Site (MBtu)	Proposed Design Site (MBtu)	Margin (MBtu)
Space Heating	--	1.5	--	23.0	--	--
Space Cooling	4.7	3.6	1.1	--	--	--
Indoor Fans	11.4	7.6	3.8	--	--	--
Heat Rejection	--	--	--	--	--	--
Pumps & Misc.	--	--	--	--	--	--
Domestic Hot Water	0.0	0.0	--	30.0	30.0	0.0
Indoor Lighting	5.1	6.6	-1.5	--	--	--
Compliance Total	**21.2**	**19.3**	**1.9**	**53.0**	**30.0**	**23.0**
Receptacle	14.8	14.8	0.0	--	--	--
Process	--	--	--	--	--	--
Other Ltg	2.8	2.8	0.0	--	--	--
Process Motors	1.6	2.1	-0.5	--	--	--
TOTAL	**40.4**	**39.0**	**1.4**	**53.0**	**30.0**	**23.0**

D. EXCEPTIONAL CONDITIONS

The aged solar reflectance and aged thermal emittance must be listed in the Cool Roof Rating Council database of certified products. For projects where initial reflectance is used, the initial reflectance must be listed, and the aged reflectance is calculated by the software program and used in the compliance model.

The building does not include service water heating. Verify that service water heating is not required and is not included in the design.

This project uses the Simplified Geometry Performance Modeling Approach which is not capable of modeling daylighting controls and assumes the prescriptive Secondary Daylit Control requirements are met. PRESCRIPTIVE COMPLIANCE documentation (form NRCC-LTI-02-E) for the requirements of section 140.6(d) Automatic Daylighting Controls in Secondary Daylit Zones is required.

E. HERS VERIFICATION

This Section Does Not Apply

G1. ENVELOPE GENERAL INFORMATION (conditioned spaces only)

1	2	3	4
Opaque Surfaces & Orientation	**Total Gross Surface Area (ft²)**	**Total Fenestration Area (ft²)**	**Window to Wall Ratio (%)**
North-Facing[1]	1,056 ft²	138 ft²	13.1%
East-Facing[2]	780 ft²	0 ft²	00.0%
South-Facing[3]	1,782 ft²	473 ft²	26.5%
West-Facing[4]	170 ft²	0 ft²	00.0%
Total	**3,788 ft²**	**611 ft²**	**16.1%**
Roof	3,602 ft²	0 ft²	00.0%

Notes:
[1] *North-Facing is oriented to within 45 degrees of true north, including 45°00'00" east of north (NE), but excluding 45°00'00" west of north (NW).*
[2] *East-Facing is oriented to within 45 degrees of true east, including 45°00'00" south of east (SE), but excluding 45°00'00" north of east (NE).*
[3] *South-Facing is oriented to within 45 degrees of true south, including 45°00'00" west of south (SW), but excluding 45°00'00" east of south (SE).*
[4] *West-Facing is oriented to within 45 degrees of true west, including 45°00'00" north of due west (NW), but excluding 45°00'00" south of west (SW).*

G2. CRRC ROOFING PRODUCT SUMMARY

1	2	3	4	5
Assembly Name	**Roof Pitch**	**Aged Solar Reflectance**	**Thermal Emittance**	**SRI**
Metal Roof20	Low-Slope	0.63	0.75	Not Provided
R-30 Built Up Roof55	Low-Slope	0.63	0.75	Not Provided

G3. OPAQUE SURFACE ASSEMBLY SUMMARY

1	2	3	4	5	6	7	8	9	10
Surface Name	**Surface Type**	**Area (ft²)**	**Framing Type**	**Cavity R-Value**	**Continuous R-Value**	**Units**	**Value**	**Description of Assembly Layers**	**Status[1]**
R-21+R5 Wall8	ExteriorWall	3788	Wood	21	5	U-Factor	0.048	Stucco - 7/8 in. Extruded Polystyrene - XPS - 1 in. R5.00 Vapor permeable felt - 1/8 in. Wood framed wall, 16in. OC, 5.5in., R-21 Gypsum Board - 1/2 in.	N

G3. OPAQUE SURFACE ASSEMBLY SUMMARY

1	2	3	4	5	6	7	8	9	10
Surface Name	**Surface Type**	**Area (ft²)**	**Framing Type**	**Cavity R-Value**	**Continuous R-Value**	**Units**	**Value**	**Description of Assembly Layers**	**Status[1]**
Metal Roof20	Roof	3786	NA	0	30	U-Factor	0.032	Metal Standing Seam - 1/16 in. Plywood - 1/2 in. Compliance Insulation R30.00 Metal Deck - 1/16 in.	N
Slab On Grade22	UndergroundFloor	5071	NA	0	NA	F-Factor	0.73	Slab Type = UnheatedSlabOnGrade Insulation Orientation = None Insulation R-Value = R0	N
interior R-13 Wall31	InteriorWall	250	Wood	13	NA	U-Factor	0.093	Gypsum Board - 1/2 in. Wood framed wall, 16in. OC, 3.5in., R-13 Gypsum Board - 1/2 in.	N
R-30 Built Up Roof55	Roof	1319	NA	0	30	U-Factor	0.032	Built-up roofing - 3/8 in. Plywood - 1/2 in. Compliance Insulation R30.00 Metal Deck - 1/16 in.	N

[1] *Status: N - New, A – Altered, E – Existing*

G5. FENESTRATION ASSEMBLY SUMMARY

1	2	3	4	5	6	7	8	9
Fenestration Assembly Name / Tag or I.D.	**Fenestration Type / Product Type / Frame Type**	**Certification Method[1]**	**Assembly Method**	**Area ft²**	**Overall U-factor**	**Overall SHGC**	**Overall VT**	**Status[2]**
NFRC strft .41/.26/.46	VerticalFenestration CurtainWall N/A	NFRC Rated	Manufactured	407	0.41	0.26	0.46	N
NFRC crtnwll .41/.26/.46	VerticalFenestration CurtainWall N/A	NFRC Rated	Manufactured	120	0.41	0.26	0.46	N
NFRC door .45/.23/.17	VerticalFenestration GlazedDoor N/A	NFRC Rated	Manufactured	84	0.45	0.23	0.17	N

G5. FENESTRATION ASSEMBLY SUMMARY

1	2	3	4	5	6	7	8	9
Fenestration Assembly Name / Tag or I.D.	**Fenestration Type / Product Type / Frame Type**	**Certification Method[1]**	**Assembly Method**	**Area ft²**	**Overall U-factor**	**Overall SHGC**	**Overall VT**	**Status[2]**
NFRC strft .41/.26/.46_Clerestory	VerticalFenestration CurtainWall N/A			NaN	0.41	0.26	0.00	N

[1] *Newly installed fenestration shall have a certified NFRC Label Certificate or use the CEC default tables found in Table 110.6-A and Table 110.6-B. Center of Glass (COG) values are for the glass-only, determined by the manufacturer, and are shown for ease of verification. Site-built fenestration values are calculated per Nonresidential Appendix NA6 and are used in the analysis.*
[2] *Status: N - New, A – Altered, E – Existing*

G6. OVERHANG DETAILS

1	2	3	4	5	6
Fenestration Tag/ID	**Orientation**	**Depth(ft.)**	**Height from Bottom of Sill to Overhang(ft)**	**Right Extent(ft)**	**Left Extent(ft)**
CW0114	South	3.0	17	6.0	6.0
SF1316	South	3.0	8	6.0	6.0
SF07 x 218	South	3.0	4	6.0	6.0
SF1442	South	3.0	10	6.0	6.0
SF1344	South	3.0	10	6.0	6.0
SF07 x 245	South	3.0	4	6.0	6.0
SF0646	South	3.0	4	6.0	6.0

H1. DRY SYSTEM EQUIPMENT (furnaces, air handling units, heat pumps, VRF, economizers etc.)

1	2	3	4	5	6	7	8	9	10	11	12
			Heating				Cooling				
Equipment Name	**Equipment Type**	**Qty**	**Total Heating Output (kBtu/h)**	**Supp Heat Output (kBtuh)**	**Efficiency Unit**	**Efficiency**	**Total Cooling Output (kBtu/h)**	**Efficiency Unit**	**Efficiency**	**Economizer Type (if present)**	**Status[1]**
HP-B101	SZHP (Packaged3Phase)	1	56	0	HSPF	8.20	62	SEER EER	13.00 10.45	FixedDryBulb	N

[1] *Status: N - New, A – Altered, E – Existing*

H1. DRY SYSTEM EQUIPMENT (furnaces, air handling units, heat pumps, VRF, economizers etc.)

1	2	3	4	5	6	7	8	9	10	11	12
			Heating				Cooling				
Equipment Name	**Equipment Type**	**Qty**	**Total Heating Output (kBtu/h)**	**Supp Heat Output (kBtuh)**	**Efficiency Unit**	**Efficiency**	**Total Cooling Output (kBtu/h)**	**Efficiency Unit**	**Efficiency**	**Economizer Type (if present)**	**Status[1]**
HP-B101	SZHP (Packaged3Phase)	1	56	0	HSPF	8.20	62	SEER EER	13.00 10.45	FixedDryBulb	N

H2. FAN SYSTEMS SUMMARY[1]

1	2	3	4	5	6	7	8	9	10	11	12	13
	System Type	**Design OA**	**Supply Fan**				**Return Fan**					
Name or Item Tag	**packaged, DOAS, etc.**	**CFM**	**CFM**	**BHP**	**Watts**	**Control**	**CFM**	**BHP**	**Watts**	**Control**	**Economizer Type (if present)**	**Status[2]**
HP-B101	SZHP	741	2000	1.000	862.0	ConstantVolume	NA	NA	NA	NA	FixedDryBulb	N
HP-B102	SZHP	598	2000	1.000	862.0	ConstantVolume	NA	NA	NA	NA	FixedDryBulb	N

[1] *Status: N - New, A – Altered, E – Existing*

H3. EXHAUST FAN SUMMARY

1	2	3	4	5	6	7
System ID	**Zone Name**	**Qty**	**CFM**	**Motor BHP**	**Motor Watts**	**Total Static Pressure (in H20)**
uc B104 B105 Restrooms50	4-uc B104 B105 Restrooms	1	500	0.206	179.9	1.70
uc B108 Custodian63	7-uc B108 Custodian	1	500	0.206	179.9	1.70

H4. Wet System Equipment(boilers,chillers,cooling towers,etc.)

This Section Does Not Apply

H5. SYSTEM SPECIAL FEATURES

1	2	3	4	5	6
System Name	**Optimum Start**	**Window Interlocks per §140.4(n)**	**Evaporative Cooling**	**Heat Recovery**	**Other Controls**
HP-B101	No Optimum Start	NA	No Evaporative Cooler	No Heat Recovery	1 Zones With CO2Sensor Vent. Control, No DDC Fixed Drybulb Economizer No Supply Air Temp. Control
HP-B102	No Optimum Start	NA	No Evaporative Cooler	No Heat Recovery	1 Zones With CO2Sensor Vent. Control, No DDC Fixed Drybulb Economizer No Supply Air Temp. Control

Notes: This table includes controls related to the performance path only. For projects using the prescriptive path, mandatory and prescriptive controls requirements are documented on the NRCC-MCH-E.

H6. MECHANICAL VENTILATION

1	2	3	4	5	6	7	8	9
Zone Name	**Mechanical Ventilation**							**DCV or Occupant Sensor Controls, or Both**
	Ventilation Function	**# hotel rooms**	**# of people**	**# of bedrooms**	**Supply OA CFM**	**Exhaust CFM**	**Conditioned Area (sf)**	
1-B101 Science	Education - Classrooms (ages 9-18)	0	49.40	0	741	0	1976	DCV
3-B103 Science	Education - Classrooms (ages 9-18)	0	39.85	0	598	0	1594	DCV

Multifamily or Hotel/Motel Occupancy? (if "Yes", see DOMESTIC/SERVICE HOT WATER SYSTEM SUMMARY)	No
Does the Project include Zonal Systems?	No

H7. ZONAL SYSTEM AND TERMINAL UNIT SUMMARY

1	2	3	4	5	6	7	8	9	10	11	12
			Rated Capacity (kBtuh)		**Airflow (cfm)**			**Fan**			
System ID	**Zone Name**	**System Type**	**Heating**	**Cooling**	**Design**	**Min.**	**Min. Ratio**	**BHP**	**Watts**	**Cycles**	**ECM Motor**
1-B101 Science-Trm	1-B101 Science	Uncontrolled	NA	NA	2000	NA	0.00	NA	NA	NA	☐
3-B103 Science-Trm	3-B103 Science	Uncontrolled	NA	NA	2000	NA	0.00	NA	NA	NA	☐

H8. EVAPORATIVE COOLER SUMMARY

This Section Does Not Apply

K1. INDOOR CONDITIONED LIGHTING GENERAL INFO

1	2	3	4	5	6
				Additional (Custom) Allowance	
Occupancy Type [1]	**Conditioned Floor Area [2] (ft²)**	**Installed Lighting Power (Watts)**	**Lighting Control Credits (Watts)**	**Area Category Footnotes (Watts)**	**Tailored Method (Watts)**
Classroom, Lecture, Training, Vocational Areas	3,570	3,232	0	0	0
Building Totals:	**3,570**	**3,232**	**0**	**0**	**0**

[1] *See Table 140.6-C*
[2] *See NRCC-LTI-01-E for unconditioned spaces*
[3] *Lighting information for existing spaces modeled is not included in the table*

IDENTIFICATION STAMP
DIV. OF THE STATE ARCHITECT
APP: 01-119994 INC:
REVIEWED FOR
SS ☑ FLS ☑ ACS ☑
DATE: 08/16/2022

QUATTROCCHI KWOK ARCHITECTS
Main:
636 Fifth Street, Santa Rosa, CA 95404
East Bay:
55 Harrison Street, Suite 525,
Oakland, CA 94607
(707) 576-0829

LICENSED ARCHITECT
JIM THEISS
LICENSE # C22643
EXP JUNE 30, 2023
STATE OF CALIFORNIA

SIGNED: JUNE 24, 2022

LIBERTY HIGH SCHOOL

NEW CLASSROOM BUILDINGS

850 2ND STREET
BRENTWOOD, CA
94513

LIBERTY UNION HIGH SCHOOL DISTRICT

DSA APP NO. 01-119994
ARCH PROJECT NO: 1925.00
DRAWN BY: JDS
DRAWING SCALE: NTS
PTN: 61721-83 FILE NO: 7-H4
CONSTRUCTION DOCUMENTS
JUNE 24, 2022
SHEET TITLE

TITLE-24

SHEET NUMBER

T-B1.1

BIMcloud: archiserver - BIMcloud Basic for ARCHICAD 22/1925.00 Liberty HS Classroom, BLDG B_AC22-6/28/2022-3:42 PM

STATE OF CALIFORNIA
Indoor Lighting
NRCC-LTI-E — CALIFORNIA ENERGY COMMISSION

CERTIFICATE OF COMPLIANCE			**NRCC-LTI-E**
Project Name:	Liberty High School Bldg B Science Classrooms	**Report Page:**	**(Page 2 of 7)**
Project Address:	850 2nd Street	**Date Prepared:**	1/18/2022

C. COMPLIANCE RESULTS
If any cell on this table says "DOES NOT COMPLY" or "COMPLIES with Exceptional Conditions" refer to Table D. for guidance.

Lighting in conditioned and unconditioned spaces must not be combined for compliance per §140.6(b)1	Allowed Lighting Power per §140.6(b) (Watts)						Adjusted Lighting Power per §140.6(a) (Watts)				Compliance Results
	01	02	03	04		05		06	07	08	09
	Complete Building §140.6(c)1	Area Category §140.6(c)2	Area Category Additional §140.6(c)2G (+)	Tailored §140.6(c)3 (+)	=	Total Allowed (Watts)	≥	Total Designed (Watts)	Adjustments: PAF Lighting Control Credits §140.6(a)2 (-)	= Total Adjusted (Watts) *Includes Adjustments	05 must be >= 08 §140.6
	(See Table I)	(See Table I)	(See Table J)	(See Table K)				(See Table F)	(See Table P)		
Conditioned					=		≥			=	
Unconditioned		854.4	0		=	854	≥	570	0	= 570	COMPLIES
Controls Compliance (See Table H for Details)											COMPLIES
Rated Power Reduction Compliance (See Table Q for Details)											

D. EXCEPTIONAL CONDITIONS
This table is auto-filled with uneditable comments because of selections made or data entered in tables throughout the form.

E. ADDITIONAL REMARKS
This table includes remarks made by the permit applicant to the Authority Having Jurisdiction.

F. INDOOR LIGHTING FIXTURE SCHEDULE
This table includes all permanent designed lighting and all portable lighting in offices.

Designed Wattage: Unconditioned Spaces

01	02	03	04	05	06	07	08	09	10	
Name or Item Tag	Complete Luminaire Description	Modular (Track) Fixture	Small Aperture & Color Change[1]	Watts per luminaire[2]	How is Wattage determined	Total Number of Luminaires	Excluded per §140.6(a)3	Design Watts	Field Inspector: Pass	Fail
AB1	AB1 4' over Mirror 19w LED	No	No	19	Mfr. Spec	2	No	38	☐	☐
AB3	AB3 8' over Mirror 38w LED	No	No	38	Mfr. Spec	6	No	228	☐	☐

Registration Number: — Registration Date/Time: — Registration Provider: Energysoft

CA Building Energy Efficiency Standards - 2019 Nonresidential Compliance — Report Version: 2019.1.003 Schema Version: rev 20200601 — Report Generated: 2022-01-18 10:40:11

Project Name:	Liberty High School Bldg B Science	NRCC-PRF-01-E	Page 13 of 14
Project Address:	850 2nd Street Brentwood 94513	Calculation Date/Time:	10:39, Tue, Jan 18, 2022
Input File Name:	1925.00 Liberty HS Bldg B Science Classrooms v8.2.2.cibd19x		

M. DECLARATION OF REQUIRED CERTIFICATES OF ACCEPTANCE
Table Instructions: Selections shall be made by Documentation Author to indicate which Certificates of Acceptance must be submitted for the features to be recognized for compliance. These documents must be provided to the building inspector during construction and must be completed through an Acceptance Test Technician Certification Provider (ATCP). For more information visit:https://www.energy.ca.gov/title24/2019standards/2019_compliance_documents/Nonresidential_Documents/NRCA/

Building Component	Form/Title
Envelope	NRCA-ENV-02-F - NRFC label verification for fenestration
Indoor Lighting	NRCA-LTI-02-A - Occupancy Sensors and Automatic Time Switch Controls
	NRCA-LTI-03-A - Automatic Daylight Controls
Covered Process	NRCA-PRC-12-F – Elevator Lighting and Ventilation Controls
Mechanical	NRCA-MCH-02-A Outdoor Air must be submitted for all newly installed HVAC units. Note: MCH02-A can be performed in conjunction with MCH-07-A Supply Fan VFD Acceptance (if applicable) since testing activities overlap
	NRCA-MCH-03-A Constant Volume Single Zone HVAC
	NRCA-MCH-05-A Air Economizer Controls
	NRCA-MCH-06-A Demand Control Ventilation Systems Acceptance must be submitted for all systems required to employ demand controlled ventilation (refer to §120.1(c)3) can vary outside ventilation flow rates based on maintaining interior carbon dioxide (CO2) concentration setpoints
	NRCA-MCH-12-A FDD for Packaged Direct Expansion Units

CA Building Energy Efficiency Standards- 2019 Nonresidential Compliance — Report Version: NRCC-PRF-01-E-12202021-6384 — Report Generated at: 2022-01-18 10:39:52

Project Name:	Liberty High School Bldg B Science	NRCC-PRF-01-E	Page 10 of 14
Project Address:	850 2nd Street Brentwood 94513	Calculation Date/Time:	10:39, Tue, Jan 18, 2022
Input File Name:	1925.00 Liberty HS Bldg B Science Classrooms v8.2.2.cibd19x		

K2. INDOOR CONDITIONED LIGHTING SCHEDULE
Luminaire Schedule (includes all permanent installed lighting in conditioned space, and portable lighting over 0.3 w/ft^2 in offices)

1	2	Installed Watts (Conditioned): 3	4	5	6
Name or Item Tag	Complete Luminaire Description (i.e., 3-lamp fluorescent troffer, F32T8, one dimmable electronic ballast)	Watts per luminaire	How Wattage is Determined	Total Number Luminaires	Installed Watts
AA2	AA2 8' Direct/Indirect 80w LED	80	According to §130.0(c)	4	320
AA7	AA7 28' Direct/Indirect 280w LED	280	According to §130.0(c)	8	2,240
AH1	AH1 Undercabinet 12w LED	12	According to §130.0(c)	56	672

K3. INDOOR CONDITIONED LIGHTING CONTROL CREDITS
Lighting Control Credits Schedule (includes all lighting controls installed in conditioned space for compliance credit per §140.6(a)2 and Table 140.6-A)

1	2	3	4	5	6	7	8	9
Area Description	Primary Function Area (must meet requirements of Table 140.6-A)	Type of Lighting Control	Power Adjustment Factor (PAF)	Luminaire Name or Item Tag	Watts per Luminaires	# of Luminaires	Lighting Controlled (Watts)	Control Credit (Watts)
S-1-B101 Science	Classroom, Lecture, Training, Vocational Areas	NA	0.00 0.00 0.00 0.00 0.00	AA7	1120.0	4	1120	0
S-1-B101 Science	Classroom, Lecture, Training, Vocational Areas	NA	0.00 0.00 0.00 0.00 0.00	AH1	336.0	28	336	0
S-2-B102 Prep Room	Classroom, Lecture, Training, Vocational Areas	NA	0.00 0.00 0.00 0.00 0.00	AA2	320.0	4	320	0

CA Building Energy Efficiency Standards- 2019 Nonresidential Compliance — Report Version: NRCC-PRF-01-E-12202021-6384 — Report Generated at: 2022-01-18 10:39:52

STATE OF CALIFORNIA
Indoor Lighting
NRCC-LTI-E — CALIFORNIA ENERGY COMMISSION

CERTIFICATE OF COMPLIANCE			**NRCC-LTI-E**
Project Name:	Liberty High School Bldg B Science Classrooms	**Report Page:**	**(Page 3 of 7)**
Project Address:	850 2nd Street	**Date Prepared:**	1/18/2022

F. INDOOR LIGHTING FIXTURE SCHEDULE

AC2	AC2 8' Striplight 40w LED	No	No	40	Mfr. Spec	5	No	200	☐	☐
AC3	AC3 4' Striplight 20w LED	No	No	20	Mfr. Spec	2	No	40	☐	☐
AE1	AE1 Recessed 16w LED	No	No	16	Mfr. Spec	4	No	64	☐	☐
							Total Designed Watts: UNCONDITIONED SPACES	570		

[1]*FOOTNOTE: Design Watts for small aperture and color changing luminaires which qualify per §140.6(a)4B is adjusted to be 75% of their rated wattage. Table F automatically makes this adjustment, the permit applicant should enter full rated wattage in column 05.*

[2]*Authority Having Jurisdiction may ask for Luminaire cut sheets to confirm wattage used for compliance per §130.0(c) Wattage used must be the maximum rated for the luminaire, not the lamp.*

G. MODULAR LIGHTING SYSTEMS
This section does not apply to this project.

H. INDOOR LIGHTING CONTROLS (Not including PAFs)
*This table includes lighting controls for conditioned and unconditioned spaces. When a control having a * is shown, the notes section of this table provides more detail on how compliance is achieved. The lighting controls section of the Compliance Summary Table on the first page will show "DOES NOT COMPLY" if the notes are left blank.*

Building Level Controls

01	02	03: Field Inspector: Pass	Fail
Mandatory Demand Response §110.12(c)	Shut-off controls §130.1(c)		
Not Required <= 10,000 SF	See Area/Space Level Controls	☐	☐

Registration Number: — Registration Date/Time: — Registration Provider: Energysoft

CA Building Energy Efficiency Standards - 2019 Nonresidential Compliance — Report Version: 2019.1.003 Schema Version: rev 20200601 — Report Generated: 2022-01-18 10:40:11

Project Name:	Liberty High School Bldg B Science	NRCC-PRF-01-E	Page 14 of 14
Project Address:	850 2nd Street Brentwood 94513	Calculation Date/Time:	10:39, Tue, Jan 18, 2022
Input File Name:	1925.00 Liberty HS Bldg B Science Classrooms v8.2.2.cibd19x		

DOCUMENTATION AUTHOR'S DECLARATION STATEMENT
I certify that this Certificate of Compliance documentation is accurate and complete.

Documentation Author Name: Sarah Pernula	Signature: Sarah Pernula
Company: SOLDATA Energy Consulting	
Address: 2227 Capricorn Way	Signature Date: 2022-01-18
City/State/Zip: Santa Rosa CA 95407	CEA/ HERS Certification Identification (if applicable): NR16-90-20043
Phone: 707.545.4440	

RESPONSIBLE PERSON'S DECLARATION STATEMENT
I certify the following under penalty of perjury, under the laws of the State of California:

1. The information provided on this Certificate of Compliance is true and correct.
2. I am eligible under Division 3 of the Business and Professions Code to accept responsibility for the building design or system design identified on this Certificate of Compliance (responsible designer)
3. The energy features and performance specifications, materials, components, and manufactured devices for the building design or system design identified on this Certificate of Compliance conform to the requirements of Title 24, Part 1 and Part 6 of the California Code of Regulations.
4. The building design features or system design features identified on this Certificate of Compliance are consistent with the information provided on other applicable compliance documents, worksheets, calculations, plans and specifications submitted to the enforcement agency for approval with this building permit application.
5. I will ensure that a completed signed copy of this Certificate of Compliance shall be made available with the building permit(s) issued for the building, and made available to the enforcement agency for all applicable inspections. I understand that a completed signed copy of this Certificate of Compliance is required to be included with the documentation the builder provides to the building owner at occupancy.

Responsible Envelope Designer Name: Jim Theiss	Signature:	
Company: Quattrocchi Kwok Architects		
Address: 636 Fifth Street	Date Signed: 6/23/2022	
City/State/Zip: Santa Rosa CA 95404		
Phone: 707 576-0829	Title: Principal	License #: C-22643
Responsible Lighting Designer Name: Pieter Colenbrander	Signature:	
Company: O'Mahony & Myer Electrical Eng & Lighting Dsgn		
Address: 4340 Redwood Hwy, Suite 245	Date Signed: 6/23/22	
City/State/Zip: San Rafael CA 94903		
Phone: 415 492-0420	Title: Principal	License #: E14738
Responsible Mechanical Designer Name: - specify - Chris Del Core	Signature:	
Company: Costa Engineers Inc.		
Address: 3274 Villa Lane	Date Signed: 6/23/22	
City/State/Zip: Napa CA 94558		
Phone: 707-252-9177	Title: Principal	License #: M31600

CA Building Energy Efficiency Standards- 2019 Nonresidential Compliance — Report Version: NRCC-PRF-01-E-12202021-6384 — Report Generated at: 2022-01-18 10:39:52

Project Name:	Liberty High School Bldg B Science	NRCC-PRF-01-E	Page 11 of 14
Project Address:	850 2nd Street Brentwood 94513	Calculation Date/Time:	10:39, Tue, Jan 18, 2022
Input File Name:	1925.00 Liberty HS Bldg B Science Classrooms v8.2.2.cibd19x		

K3. INDOOR CONDITIONED LIGHTING CONTROL CREDITS
Lighting Control Credits Schedule (includes all lighting controls installed in conditioned space for compliance credit per §140.6(a)2 and Table 140.6-A)

1	2	3	4	5	6	7	8	9
Area Description	Primary Function Area (must meet requirements of Table 140.6-A)	Type of Lighting Control	Power Adjustment Factor (PAF)	Luminaire Name or Item Tag	Watts per Luminaires	# of Luminaires	Lighting Controlled (Watts)	Control Credit (Watts)
S-4-B103 Science	Classroom, Lecture, Training, Vocational Areas	NA	0.00 0.00 0.00 0.00 0.00	AA7	1120.0	4	1120	0
S-4-B103 Science	Classroom, Lecture, Training, Vocational Areas	NA	0.00 0.00 0.00 0.00 0.00	AH1	336.0	28	336	0

K4. INDOOR CONDITIONED LIGHTING MANDATORY LIGHTING CONTROLS
Building Level Controls

1: Mandatory Demand Response §110.12(c)	2: Shut-Off Controls §130.1(c)
NA	NA

Area Level Controls (includes all lighting controls installed in conditioned space to meet mandatory requirements per §130.1)

4: Area Description	5: Area Category Primary Function Area	6: Area Controls 130.1(a)	7: Multi-Level Controls 130.1(b)	8: Shut-Off Controls 130.1(c)	9: Primary Daylighting 130.1(d)	10: Secondary Daylighting 140.5(d)
Classrooms	Classroom, Lecture, Training, Vocational Areas	Required	Required	Required	Required	Required
Restrooms	Restrooms	Required	Required	Required	NA	NA
Support	Electrical, Mechanical, Telephone Rooms	Required	Required	Required	NA	NA

CA Building Energy Efficiency Standards- 2019 Nonresidential Compliance — Report Version: NRCC-PRF-01-E-12202021-6384 — Report Generated at: 2022-01-18 10:39:52

STATE OF CALIFORNIA
Indoor Lighting
NRCC-LTI-E — CALIFORNIA ENERGY COMMISSION

CERTIFICATE OF COMPLIANCE			**NRCC-LTI-E**
Project Name:	Liberty High School Bldg B Science Classrooms	**Report Page:**	**(Page 4 of 7)**
Project Address:	850 2nd Street	**Date Prepared:**	1/18/2022

H. INDOOR LIGHTING CONTROLS (Not including PAFs)
Area Level Controls

04	05	06	07	08	09	10	11	12: Field Inspector: Pass	Fail
Area Description	Complete Building or Area Category Primary Function Area	Area Controls §130.1(a)	Multi-Level Controls §130.1(b)	Shut-Off Controls §130.1(c)	Primary/Skylit Daylighting §130.1(d)	Secondary Daylighting §140.6(d)	Interlocked Systems §140.6(a)1		
Classrooms	Classroom, Lecture, or Training Vocational Area	Manual ON/OFF	Dimmer	Occupancy Sensor	Included	Included	No	☐	☐
Restrooms	Restrooms	Manual ON/OFF	Other*	Occupancy Sensor	N/A	N/A	No	☐	☐
Support	Electrical Mechancial Telephone Room	Manual ON/OFF	Dimmer	Other	N/A	N/A	No	☐	☐

*NOTES: Controls with a * require a note in the space below explaining how compliance is achieved.
EX: Conference 1: Primary/Skylight Daylighting: Exempt because less than 120 watts of general lighting; EXCEPTION 1 to §130.1(d)2

		13
		Plan Sheet Showing Daylit Zones:
Restrooms	130.1(a)1 Exception - may be accesible to authorized personnel only	E-5.2
Support	130.1(b) < 100sf; 130.1(c) Ex 4	

I. LIGHTING POWER ALLOWANCE: COMPLETE BUILDING OR AREA CATEGORY METHODS
Each area complying using the Complete Building or Area Category Methods per §140.6(b) are included in this table. Column 06 indicates if additional lighting power allowances per §140.6(c) or adjustments per §140.6(a) are being used .

Unconditioned Spaces

01	02	03	04	05	06: Additional Allowance / Adjustment: Area Category	PAF
Area Description	Complete Building or Area Category Primary Function Area	Allowed Density (W/ft^2)	Area (ft^2)	Allowed Wattage (Watts)		
uc B109 Mechanical	Electrical Mechancial Telephone Room	0.4	182	72.8	No	No
uc B104 B105 Restrooms	Restrooms	0.65	812	527.8	No	No

Registration Number: — Registration Date/Time: — Registration Provider: Energysoft

CA Building Energy Efficiency Standards - 2019 Nonresidential Compliance — Report Version: 2019.1.003 Schema Version: rev 20200601 — Report Generated: 2022-01-18 10:40:11

STATE OF CALIFORNIA
Indoor Lighting
NRCC-LTI-E — CALIFORNIA ENERGY COMMISSION

CERTIFICATE OF COMPLIANCE			**NRCC-LTI-E**
This document is used to demonstrate compliance with requirements in §110.9, §110.12(c), §130.0, §130.1, §140.6 and §141.0(b)2 for indoor lighting scopes using the prescriptive path.			
Project Name:	Liberty High School Bldg B Science Classrooms	**Report Page:**	**(Page 1 of 7)**
Project Address:	850 2nd Street	**Date Prepared:**	1/18/2022

A. GENERAL INFORMATION

01 Project Location (city)	Brentwood	04 Total Conditioned Floor Area (ft^2)	0
02 Climate Zone	12	05 Total Unconditioned Floor Area (ft^2)	1,501
03 Occupancy Types Within Project (select all that apply):		06 # of Stories (Habitable Above Grade)	1

☐ Office ☐ Retail ☐ Warehouse ☐ Hotel/Motel ☐ School ☒ Support Areas
☐ Parking Garage ☐ High-Rise Residential ☐ Relocatable ☐ Healthcare ☒ Other (Write in) See Table I

B. PROJECT SCOPE
This table includes any lighting systems that are within the scope of the permit application and are demonstrating compliance using the prescriptive path outlined in §140.6 or §141.0(b)2 for alterations.

Scope of Work: 01	Conditioned Spaces: 02	03	Unconditioned Spaces: 04	05
My Project Consists of (check all that apply):	Calculation Method	Area (ft^2)	Calculation Method	Area (ft^2)
☒ New Lighting System	Area Category Method	0	Area Category Method	1501
☐ New Lighting System - Parking Garage				
Total Area of Work (ft^2)	0		1501	

Registration Number: — Registration Date/Time: — Registration Provider: Energysoft

CA Building Energy Efficiency Standards - 2019 Nonresidential Compliance — Report Version: 2019.1.003 Schema Version: rev 20200601 — Report Generated: 2022-01-18 10:40:11

Project Name:	Liberty High School Bldg B Science	NRCC-PRF-01-E	Page 12 of 14
Project Address:	850 2nd Street Brentwood 94513	Calculation Date/Time:	10:39, Tue, Jan 18, 2022
Input File Name:	1925.00 Liberty HS Bldg B Science Classrooms v8.2.2.cibd19x		

L. DECLARATION OF REQUIRED CERTIFICATES OF INSTALLATION
Table Instructions: Selections shall be made by Documentation Author to indicate which Certificates of Installation must be submitted for the features to be recognized for compliance. These documents must be retained and provided to the building inspector during construction and can be found online at: https://www.energy.ca.gov/title24/2019standards/2019_compliance_documents/Nonresidential_Documents/NRCI/

Building Component	Form/Title
Envelope	NRCI-ENV-01-E - Must be submitted for all buildings
Mechanical	NRCI-MCH-01-E - Must be submitted for all buildings
Indoor Lighting	NRCI-LTI-01-E - Must be submitted for all buildings
Covered Process	NRCI-PRC-01-E - Must be submitted for all Covered Processes

CA Building Energy Efficiency Standards- 2019 Nonresidential Compliance — Report Version: NRCC-PRF-01-E-12202021-6384 — Report Generated at: 2022-01-18 10:39:52

IDENTIFICATION STAMP
DIV. OF THE STATE ARCHITECT
APP: 01-119994 INC:
REVIEWED FOR
SS ☑ FLS ☑ ACS ☑
DATE: 08/16/2022

QUATTROCCHI KWOK ARCHITECTS
Main:
636 Fifth Street, Santa Rosa, CA 95404
East Bay:
55 Harrison Street, Suite 525,
Oakland, CA 94607
(707) 576-0829

LICENSED ARCHITECT
JIM THEISS
LICENSE # C22643
EXP JUNE 30, 2023
STATE OF CALIFORNIA
SIGNED: JUNE 24, 2022

LIBERTY HIGH SCHOOL

NEW CLASSROOM BUILDINGS

850 2ND STREET
BRENTWOOD, CA
94513

LIBERTY UNION HIGH SCHOOL DISTRICT

DSA APP NO. 01-119994
ARCH PROJECT NO: 1925.00
DRAWN BY: JDS
DRAWING SCALE: NTS
PTN: 61721-83 FILE NO: 7-H4
CONSTRUCTION DOCUMENTS
JUNE 24, 2022
SHEET TITLE

TITLE-24

SHEET NUMBER
T-B1.2

BIMcloud: archiserver - BIMcloud Basic for ARCHICAD 22/1925.00 Liberty HS Classroom_BLDG B_AC22/6/28/2022/3:42 PM

STATE OF CALIFORNIA
Outdoor Lighting
NRCC-LTO-E — CALIFORNIA ENERGY COMMISSION

CERTIFICATE OF COMPLIANCE			**NRCC-LTO-E**
Project Name:	Liberty High School Bldg B Science Classrooms	**Report Page:**	**(Page 4 of 7)**
Project Address:	850 2nd Street	**Date Prepared:**	1/18/2022

H. OUTDOOR LIGHTING CONTROLS

This table demonstrates compliance with controls requirements for all new or altered luminaires installed as part of the permit application. For alteration projects, luminaires which are existing to remain (ie untouched) and luminaires which are removed and reinstalled (wiring only) do not need to be included in this table even if they are within the spaces covered by the permit application.
*When an option having a * is selected, the notes section of this table must be completed. The lighting controls section of the Compliance Summary Table on the first page will show "DOES NOT COMPLY" if the notes are left blank.*

Mandatory Controls

01	02	03	04	05	
Area Description	Shut-Off §130.2(c)1	Auto-Schedule §130.2(c)2	Motion Sensor §130.2(c)3	Field Inspector	
				Pass	Fail
Pedestrian Hardscape	Photocontrol	Yes	Yes	☐	☐

** NOTES: Controls with a * require a note in the space below explaining how compliance is achieved.*
EX: Not permitted by health & safety to be turned off; EXCEPTION 1 to §130.1(c)

Registration Number: | Registration Date/Time: | Registration Provider: Energysoft
CA Building Energy Efficiency Standards - 2019 Nonresidential Compliance | Report Version: 2019.1.003 Schema Version: rev 20200601 | Report Generated: 2022-01-18 10:40:11

STATE OF CALIFORNIA
Outdoor Lighting
NRCC-LTO-E — CALIFORNIA ENERGY COMMISSION

CERTIFICATE OF COMPLIANCE			**NRCC-LTO-E**
Project Name:	Liberty High School Bldg B Science Classrooms	**Report Page:**	**(Page 1 of 7)**
Project Address:	850 2nd Street	**Date Prepared:**	1/18/2022

A. GENERAL INFORMATION

01	Project Location (city)	Brentwood	04 Total Illuminated Hardscape Area (ft^2)	8800
02	Climate Zone	12		
03	Outdoor Lighting Zone per Title 24 Part 1 §10.114 or as designated by Authority Having Jurisdiction (AHJ):			
☐	LZ-0: Very Low - Undeveloped Parkland	☐ LZ-2: Moderate - Rural Areas	☐ LZ-4: High - Must be reviewed by CA Energy Commission for Approval	
☐	LZ-1: Low - Developed Parkland	☒ LZ-3: Moderately High - Urban Areas		

B. PROJECT SCOPE

This table includes outdoor lighting systems that are within the scope of the permit application and are demonstrating compliance using the prescriptive path outlined in §140.7 or §141.0(b)2L for alterations.

My Project Consists of:

01	02
☒ New Lighting System	Must Comply with Allowances from §140.7
☐ Altered Lighting System	Is your alteration increasing the connected lighting load (Watts)? ◯ Yes ◯ No

03	04	05
% of Existing Luminaires Being Altered[1]	Sum Total of Luminaires Being Added or Altered	Calculation Method
☐ < 10% ☐ >= 10% and < 50% ☐ >= 50%		

Please proceed to Table F. Outdoor Lighting Fixture Schedule to define the project's luminaires.

[1] FOOTNOTES: % of Existing Luminaires Being Altered = (Sum Total of Luminaires Being Added or Altered / Existing Luminaires within the Scope of the Permit Application) x 100.

Registration Number: | Registration Date/Time: | Registration Provider: Energysoft
CA Building Energy Efficiency Standards - 2019 Nonresidential Compliance | Report Version: 2019.1.003 Schema Version: rev 20200601 | Report Generated: 2022-01-18 10:40:11

STATE OF CALIFORNIA
Indoor Lighting
NRCC-LTI-E — CALIFORNIA ENERGY COMMISSION

CERTIFICATE OF COMPLIANCE			**NRCC-LTI-E**
Project Name:	Liberty High School Bldg B Science Classrooms	**Report Page:**	**(Page 5 of 7)**
Project Address:	850 2nd Street	**Date Prepared:**	1/18/2022

I. LIGHTING POWER ALLOWANCE: COMPLETE BUILDING OR AREA CATEGORY METHODS

uc B106 Fire Riser	Electrical Mechancial Telephone Room	0.4	84	33.6	No	No
uc B107 Electrical	Electrical Mechancial Telephone Room	0.4	168	67.2	No	No
uc B108 Custodian	General Commercial Industrial Work AreaLow Bay	0.6	255	153	No	No
		TOTALS:	1,501	854.4	See Tables J, or P for detail	

J. ADDITIONAL ALLOWANCE: AREA CATEGORY METHOD QUALIFYING LIGHTING SYSTEM
This section does not apply to this project.

K. TAILORED METHOD GENERAL LIGHTING POWER ALLOWANCE
This section does not apply to this project.

L. ADDITIONAL LIGHTING ALLOWANCE: TAILORED WALL DISPLAY
This section does not apply to this project.

M. ADDITIONAL LIGHTING ALLOWANCE: TAILORED FLOOR AND TASK LIGHTING
This section does not apply to this project.

N. ADDITIONAL LIGHTING ALLOWANCE: TAILORED ORNAMENTAL/SPECIAL EFFECTS
This section does not apply to this project.

O. ADDITIONAL LIGHTING ALLOWANCE: TAILORED VERY VALUABLE MERCHANDISE
This section does not apply to this project.

P. POWER ADJUSTMENT: LIGHTING CONTROL CREDIT (POWER ADJUSTMENT FACTOR (PAF))
This section does not apply to this project.

Q. RATED POWER REDUCTION COMPLIANCE FOR ALTERATIONS
This section does not apply to this project.

Registration Number: | Registration Date/Time: | Registration Provider: Energysoft
CA Building Energy Efficiency Standards - 2019 Nonresidential Compliance | Report Version: 2019.1.003 Schema Version: rev 20200601 | Report Generated: 2022-01-18 10:40:11

STATE OF CALIFORNIA
Outdoor Lighting
NRCC-LTO-E — CALIFORNIA ENERGY COMMISSION

CERTIFICATE OF COMPLIANCE			**NRCC-LTO-E**
Project Name:	Liberty High School Bldg B Science Classrooms	**Report Page:**	**(Page 5 of 7)**
Project Address:	850 2nd Street	**Date Prepared:**	1/18/2022

I. LIGHTING POWER ALLOWANCE (per §140.7)

This table includes areas using allowance calculations per §140.7. General Hardscape Allowance is per Table 140.7-A while "Use it or lose it" Allowances are per Table 140.7-B. Indicate which allowances are being used to expand sections for user input. Luminaires that qualify for one of the "Use it or lose it" allowances shall not qualify for another "Use it or lose it" allowance.

01				
☒ General Hardscape Allowance Table I (below)	"Use it or lose it" Allowance (select all that apply) (select all that apply)			
	☐ Per Application Table J	☐ Sales Frontage Table K	☐ Ornamental Table L	☐ Per Specific Area Table M

Calculated General Hardscape Lighting Power Allowance per Table 140.7-A (LZ 0, 1 & 4)
This section does not apply to this project.
Calculated General Hardscape Lighting Power Allowance per Table 140.7-A (LZ 2 & 3)

02	03	04	05	06	07	08	09	10
Area Description	Surface Type	Area Wattage Allowance (AWA)			Area Wattage Allowance (AWA)			Total General AWA = LWA (Watts)
		Illuminated Area (ft^2)	Allowed Density (W/ft^2)	Area Allowance (Watts)	Perimeter Length (lf)	Allowed Density (W/lf)	Linear Allowance (Watts)	
Pedestrian Hardscape	Concrete	8800	0.03	264	294	0.4	117.6	381.6
							Initial Wattage Allowance for Entire Site (Watts):	350
							Total General Hardscape Allowance (Watts):	731.6

J. LIGHTING ALLOWANCE: PER APPLICATION
This section does not apply to this project.

K. LIGHTING ALLOWANCE: SALES FRONTAGE
This section does not apply to this project.

L. LIGHTING ALLOWANCE: ORNAMENTAL
This section does not apply to this project.

M. LIGHTING ALLOWANCE: PER SPECIFIC AREA
This section does not apply to this project.

Registration Number: | Registration Date/Time: | Registration Provider: Energysoft
CA Building Energy Efficiency Standards - 2019 Nonresidential Compliance | Report Version: 2019.1.003 Schema Version: rev 20200601 | Report Generated: 2022-01-18 10:40:11

STATE OF CALIFORNIA
Outdoor Lighting
NRCC-LTO-E — CALIFORNIA ENERGY COMMISSION

CERTIFICATE OF COMPLIANCE			**NRCC-LTO-E**
Project Name:	Liberty High School Bldg B Science Classrooms	**Report Page:**	**(Page 2 of 7)**
Project Address:	850 2nd Street	**Date Prepared:**	1/18/2022

C. COMPLIANCE RESULTS

Results in this table are automatically calculated from data input and calculations in Tables F through I. Note: If any cell on this table says "COMPLIES with Exceptional Conditions" refer to Table D. Exceptional Conditions for guidance or see applicable Table referenced below.

Calculations of Total Allowed Lighting Power (Watts) §140.7 or §141.0(b)2L												Compliance Results		
01		02		03		04		05		06		07	08	09
General Hardscape Allowance §140.7(d)1 (See Table I)	+	Per Application §140.7(d)2 (See Table J)	+	Sales Frontage §140.7(d)2 (See Table K)	+	Ornamental §140.7(d)2 (See Table L)	+	Per Specific Area §140.7(d)2 (See Table M)	OR	Existing Power Allowance §141.0(b)2L (See Table N)	=	**Total Allowed** (Watts)	≥	**Total Actual** (Watts)	**07 must be >= 08**
731.6	+	---	+	---	+	---	+	---	OR	---	=	731.6	≥	375	COMPLIES
												Cutoff Compliance (See Table G for Details)			N/A
												Controls Compliance (See Table H for Details)			COMPLIES

D. EXCEPTIONAL CONDITIONS
This table is auto-filled with uneditable comments because of selections made or data entered in tables throughout the form.

E. ADDITIONAL REMARKS
This table includes remarks made by the permit applicant to the Authority Having Jurisdiction.

Registration Number: | Registration Date/Time: | Registration Provider: Energysoft
CA Building Energy Efficiency Standards - 2019 Nonresidential Compliance | Report Version: 2019.1.003 Schema Version: rev 20200601 | Report Generated: 2022-01-18 10:40:11

STATE OF CALIFORNIA
Indoor Lighting
NRCC-LTI-E — CALIFORNIA ENERGY COMMISSION

CERTIFICATE OF COMPLIANCE			**NRCC-LTI-E**
Project Name:	Liberty High School Bldg B Science Classrooms	**Report Page:**	**(Page 6 of 7)**
Project Address:	850 2nd Street	**Date Prepared:**	1/18/2022

R. 80% LIGHTING POWER FOR ALL ALTERATIONS - CONTROLS EXCEPTIONS
This section does not apply to this project.

S. DAYLIGHT DESIGN POWER ADJUSTMENT FACTOR (PAF)
This section does not apply to this project.

T. DECLARATION OF REQUIRED CERTIFICATES OF INSTALLATION

Selections have been made based on information provided in this document. If any selection have been changed by permit applicant, an explanation should be included in Table E. Additional Remarks. These documents must be provided to the building inspector during construction and can be found online at https://www.energy.ca.gov/title24/2019standards/2019_compliance_documents/Nonresidential_Documents/NRCI/

Yes	No	Form/Title	Field Inspector Pass	Field Inspector Fail
●	◯	NRCI-LTI-01-E - Must be submitted for all buildings	☐	☐
◯	●	NRCI-LTI-02-E- Must be submitted for a lighting control system, or for an Energy Management Control System (EMCS), to be recognized for compliance.	☐	☐
◯	●	NRCI-LTI-04-E - Must be submitted for two interlocked systems serving an auditorium, a convention center, a conference room, a multipurpose room or a theater to be recognized for compliance.	☐	☐
◯	●	NRCI-LTI-05-E- Must be submitted for a Power Adjustment Factor (PAF) to be recognized for compliance.	☐	☐
◯	●	NRCI-LTI-06-E- Must be submitted for additional wattage installed in a video conferencing studio to be recognized for compliance.	☐	☐

U. DECLARATION OF REQUIRED CERTIFICATES OF ACCEPTANCE

Selections have been made based on information provided in this document. If any selection have been changed by the permit applicant, an explanation should be included in Table E. Additional Remarks. These documents must be provided to the building inspector during construction and any with "-A" in the form name must be completed through an Acceptance Test Technician Certification Provider (ATTCP). For more information visit: http://www.energy.ca.gov/title24/attcp/providers.html

Yes	No	Form/Title	Field Inspector Pass	Field Inspector Fail
●	◯	NRCA-LTI-02-A - Must be submitted for occupancy sensors and automatic time switch controls.	☐	☐
●	◯	NRCA-LTI-03-A - Must be submitted for automatic daylight controls.	☐	☐
◯	●	NRCA-LTI-04-A - Must be submitted for demand responsive lighting controls.	☐	☐
◯	●	NRCA-LTI-05-A. - Must be submitted for institutional tuning power adjustment factor (PAF)	☐	☐

Registration Number: | Registration Date/Time: | Registration Provider: Energysoft
CA Building Energy Efficiency Standards - 2019 Nonresidential Compliance | Report Version: 2019.1.003 Schema Version: rev 20200601 | Report Generated: 2022-01-18 10:40:11

STATE OF CALIFORNIA
Outdoor Lighting
NRCC-LTO-E — CALIFORNIA ENERGY COMMISSION

CERTIFICATE OF COMPLIANCE			**NRCC-LTO-E**
Project Name:	Liberty High School Bldg B Science Classrooms	**Report Page:**	**(Page 6 of 7)**
Project Address:	850 2nd Street	**Date Prepared:**	1/18/2022

N. EXISTING CONDITIONS POWER ALLOWANCE (alterations only)
This section does not apply to this project.

O. DECLARATION OF REQUIRED CERTIFICATES OF INSTALLATION

Selections have been made based on information provided in this document. If any selection have been changed by permit applicant, an explanation should be included in Table E. Additional Remarks. These documents must be provided to the building inspector during construction and can be found online at https://www.energy.ca.gov/title24/2019standards/2019_compliance_documents/Nonresidential_Documents/NRCI/

Yes	No	Form/Title	Field Inspector Pass	Field Inspector Fail
●	◯	NRCI-LTO-01-E - Must be submitted for all buildings	☐	☐
●	◯	NRCI-LTO-02-E- Must be submitted for a lighting control system, or for an Energy Management Control System (EMCS), to be recognized for compliance.	☐	☐

P. DECLARATION OF REQUIRED CERTIFICATES OF ACCEPTANCE

Selections have been made based on information provided in this document. If any selection have been changed by permit applicant, an explanation should be included in Table E. Additional Remarks. These documents must be provided to the building inspector during construction and must be completed through an Acceptance Test Technician Certification Provider (ATTCP). For more information visit: http://www.energy.ca.gov/title24/attcp/providers.html

Yes	No	Form/Title	Field Inspector Pass	Field Inspector Fail
●	◯	NRCA-LTO-02-A - Must be submitted for all outdoor lighting controls except for alterations where controls are added to <= 20 luminaires.	☐	☐

Registration Number: | Registration Date/Time: | Registration Provider: Energysoft
CA Building Energy Efficiency Standards - 2019 Nonresidential Compliance | Report Version: 2019.1.003 Schema Version: rev 20200601 | Report Generated: 2022-01-18 10:40:11

STATE OF CALIFORNIA
Outdoor Lighting
NRCC-LTO-E — CALIFORNIA ENERGY COMMISSION

CERTIFICATE OF COMPLIANCE			**NRCC-LTO-E**
Project Name:	Liberty High School Bldg B Science Classrooms	**Report Page:**	**(Page 3 of 7)**
Project Address:	850 2nd Street	**Date Prepared:**	1/18/2022

F. OUTDOOR LIGHTING FIXTURE SCHEDULE

For new or altered lighting systems demonstrating compliance with §140.7 all new luminaires being installed and any existing luminaires remaining or being moved within the spaces covered by the permit application are included in the Table below. For altered lighting systems using the Existing Power method per §141.0(b)2L only new luminaires being installed and replacement luminaires being installed as part of the project scope are included (ie, existing luminaires remaining or existing luminaires being moved are not included).

Designed Wattage:

01	02		03	04	05	06	07	08	09	10	
Name or Item Tag	Complete Luminaire Description		Watts per luminaire[1, 2]	How is Wattage determined	Total number luminaires[2]	Luminaire Status[3]	Excluded per §140.7(a)	Design Watts	Cutoff Req. > 6,200 initial lumen output §130.2(b)[4]	Field Inspector Pass	Field Inspector Fail
BC1	BC1 Wall Sconce 25w LED	☐ Linear	25	Mfr. Spec	12	New	☐	300	NA: < 6200 lumens	☐	☐
BC2	BC2 Wall Sconce 25w LED	☐ Linear	25	Mfr. Spec	3	New	☐	75	NA: < 6200 lumens	☐	☐
								Total Design Watts:	375		

** NOTES: Selections with a * require a note in the space below explaining how compliance is achieved.*
EX: Luminaire is lighting a statue; EXCEPTION 2 to §130.2(b)

[1] FOOTNOTES: Authority Having Jurisdiction may ask for Luminaire cut sheets to confirm wattage used for compliance per §130.0(c)
[2] For linear luminaires, wattage should be indicated as W/lf instead of Watts/luminaire. Total linear feet should be indicated in column 05 instead of number of luminaires.
[3] Select "New" for new luminaires in a new outdoor lighting project, or for added luminaires in an alteration. Select "Altered" for replacement luminaires in an alteration. Select "Existing to Remain" for existing luminaires within the project scope that are not being altered and are remaining. Select "Existing Reinstalled" for existing luminaires which are being removed and reinstalled as part of the project scope.
[4] Compliance with mandatory cutoff requirements is required for luminaires with initial lumen output >= 6,200 unless exempted by §130.2(b)

G. CUTOFF REQUIREMENTS (BUG)
This section does not apply to this project.

Registration Number: | Registration Date/Time: | Registration Provider: Energysoft
CA Building Energy Efficiency Standards - 2019 Nonresidential Compliance | Report Version: 2019.1.003 Schema Version: rev 20200601 | Report Generated: 2022-01-18 10:40:11

STATE OF CALIFORNIA
Indoor Lighting
NRCC-LTI-E — CALIFORNIA ENERGY COMMISSION

CERTIFICATE OF COMPLIANCE			**NRCC-LTI-E**
Project Name:	Liberty High School Bldg B Science Classrooms	**Report Page:**	**(Page 7 of 7)**
Project Address:	850 2nd Street	**Date Prepared:**	1/18/2022

DOCUMENTATION AUTHOR'S DECLARATION STATEMENT
I certify that this Certificate of Compliance documentation is accurate and complete.

Documentation Author Name: Sarah Pernula	Documentation Author Signature: Sarah Pernula
Company: SOLDATA Energy Consulting	Signature Date: 2022-01-18
Address: 2227 Capricorn Way	CEA/ HERS Certification Identification (if applicable): NR16-90-20043
City/State/Zip: Santa Rosa CA 95407	Phone: 707.545.4440

RESPONSIBLE PERSON'S DECLARATION STATEMENT
I certify the following under penalty of perjury, under the laws of the State of California:
1. The information provided on this Certificate of Compliance is true and correct.
2. I am eligible under Division 3 of the Business and Professions Code to accept responsibility for the building design or system design identified on this Certificate of Compliance (responsible designer)
3. The energy features and performance specifications, materials, components, and manufactured devices for the building design or system design identified on this Certificate of Compliance conform to the requirements of Title 24, Part 1 and Part 6 of the California Code of Regulations.
4. The building design features or system design features identified on this Certificate of Compliance are consistent with the information provided on other applicable compliance documents, worksheets, calculations, plans and specifications submitted to the enforcement agency for approval with this building permit application.
5. I will ensure that a completed signed copy of this Certificate of Compliance shall be made available with the building permit(s) issued for the building, and made available to the enforcement agency for all applicable inspections. I understand that a completed signed copy of this Certificate of Compliance is required to be included with the documentation the builder provides to the building owner at occupancy.

Responsible Designer Name: Pieter Colenbrander	Responsible Designer Signature: P. Colenbrander
Company: O'Mahony & Myer Electrical Eng & Lighting Dsgn	Date Signed: 2022-01-18
Address: 4340 Redwood Hwy, Suite 245	License: E14738
City/State/Zip: San Rafael CA 94903	Phone: 415 492-0420

Registration Number: | Registration Date/Time: | Registration Provider: Energysoft
CA Building Energy Efficiency Standards - 2019 Nonresidential Compliance | Report Version: 2019.1.003 Schema Version: rev 20200601 | Report Generated: 2022-01-18 10:40:11

IDENTIFICATION STAMP
DIV. OF THE STATE ARCHITECT
APP: 01-119994 INC:
REVIEWED FOR
SS ☑ FLS ☑ ACS ☑
DATE: 08/16/2022

QUATTROCCHI KWOK ARCHITECTS
Main:
636 Fifth Street, Santa Rosa, CA 95404
East Bay:
55 Harrison Street, Suite 525,
Oakland, CA 94607
(707) 576-0829

LICENSED ARCHITECT
JIM THEISS
LICENSE # C22643
EXP JUNE 30, 2023
STATE OF CALIFORNIA
SIGNED: JUNE 24, 2022

LIBERTY HIGH SCHOOL

NEW CLASSROOM BUILDINGS

850 2ND STREET
BRENTWOOD, CA
94513

LIBERTY UNION HIGH SCHOOL DISTRICT

DSA APP NO. 01-119994

ARCH PROJECT NO:	1925.00
DRAWN BY:	JDS
DRAWING SCALE:	NTS
PTN: 61721-83	FILE NO: 7-H4

CONSTRUCTION DOCUMENTS
JUNE 24, 2022
SHEET TITLE

TITLE-24

SHEET NUMBER
T-B1.3

BIMcloud: archiserver - BIMcloud Basic for ARCHICAD 22/1925.00 Liberty HS Classroom_BLDG B_AC22.6/28/2022.3:42 PM

STATE OF CALIFORNIA
Solar Ready Areas
NRCC-SRA-E
CALIFORNIA ENERGY COMMISSION

CERTIFICATE OF COMPLIANCE			NRCC-SRA-E
Project Name:	Liberty High School Bldg B Science Classrooms	Report Page:	(Page 3 of 5)
Project Address:	850 2nd Street	Date Prepared:	1/18/2022

F. ALLOCATED SOLAR ZONE

This table is completed if the project is designating a solar zone to comply with §110.10(b)1B. New construction consider the total roof area; Additions consider newly added roof area. This table demonstrates that the project has designated the minimum area required for the Allocated Solar Zone, and also that the requirements for Solar Zone Subareas have been met. Each subarea must be shown on a roof plan or documented in construction documents. The solar zones must also comply with fire code requirements, including, but not limited to, setback and pathway requirements. Requirements for interconnection pathways must also be included in construction documents, and the location is specified in this table.

Required Minimum Solar Zone

01	02	03	04	05	06			07	08
					Potential Solar Zone Areas: Roof areas with >= 70% Solar Access				
Minimum Solar Zone Area Calculation Method	Total New or Added Roof Area (ft^2)	Total New or Added Roof Area Covered with Skylights (ft^2)	Minimum Solar Zone Based on Total or Added Roof Area (0.15 x (Roof-Skylt)) (ft^2)	Method/ Tools Used to Determine Annual Solar Access for Potential Zones[1]	Low-Sloped Area (<= 2:12 pitch) (ft^2)	Steep-Sloped Area (> 2:12 pitch) Oriented 90 ° - 300 ° (ft^2)	Total Potential Solar Zone Area (ft^2)	Minimum Solar Zone Based on Potential Zone (0.5 x (Total Potential Zone)) (ft^2)	Required Minimum Solar Zone Area (ft^2)
Total New or Added Roof Area	5105	0	765.75						765.75

Designated Solar Zone Subareas

09	10	11	12	13	14	15	16	17	18	19
Subarea Name or Tag	Building Plan Reference	Roof or Overhang Slope (Low <= 2:12 pitch) (Steep > 2:12 pitch)	Is Steep-Sloped Roof or Overhang between 90 and 300 degrees?	Subarea Complies with Title 24, Part 9	Solar Zone Subarea Free of Obstructions per §110.10(b)3A	Subarea is Required Distance from Potential Obstructions per §110.10(b)3B	Is the Smallest Dimension 5 feet or greater?	Min. Area Required per Subarea (ft^2)	Designated Area (ft^2)	Subarea Complies?
Solar Zone	Roof Plan	LowSlope	No	Yes	Yes	Yes	Yes	80	770	COMPLIES
								Total Designated Solar Zone Area (ft^2):	770	

Registration Number: | Registration Date/Time: | Registration Provider: Energysoft

CA Building Energy Efficiency Standards - 2019 Nonresidential Compliance | Report Version: 2019.1.003 Schema Version: rev 20200601 | Report Generated: 2022-01-18 10:40:11

STATE OF CALIFORNIA
Solar Ready Areas
NRCC-SRA-E
CALIFORNIA ENERGY COMMISSION

CERTIFICATE OF COMPLIANCE			NRCC-SRA-E
Project Name:	Liberty High School Bldg B Science Classrooms	Report Page:	(Page 4 of 5)
Project Address:	850 2nd Street	Date Prepared:	1/18/2022

Interconnection Pathways

Location in construction documents showing the location for inverters and metering equipment and a pathway for the routing of conduit/ plumbing to the electrical service/ water heating system per §110.10(c).	A-B4.1

[1]FOOTNOTE: This field is used to document how the percentage of annual solar access was determined per §110.10(b)1B. Solar access is the ratio of solar insolation including shade to the solar insolation without shade. Shading from obstructions located on the roof or any other part of the building shall not be included in the determination of annual solar access.

G. PERMANENTLY INSTALLED SOLAR PHOTOVOLTAIC (PV) SYSTEM

This section does not apply to this project.

H. PERMANENTLY INSTALLED SOLAR HOT WATER SYSTEMS

This section does not apply to this project.

I. SMART THERMOSTATS AND ALTERNATIVE EFFICIENCY MEASURE

This section does not apply to this project.

J. DECLARATION OF REQUIRED CERTIFICATES OF INSTALLATION

Selections have been made based on information provided in this document. If any selections have been changed by the permit applicant, an explanation should be included Table E. Additional Remarks. These documents must be provided to the building inspector during construction and can be found online at https://www.energy.ca.gov/title24/2019standards/2019_compliance_documents/Nonresidential_Documents/NRCI/

Yes	No	Form/Title	Field Inspector Pass	Field Inspector Fail
○	●	NRCI-SPV-01-E - Must be submitted for all newly installed Photovoltaic Systems (PV) being used to comply with §110.10(b)1B for high-rise multifamily, Hotel/Motel buildings less than 10 stories and nonresidential buildings less than 4 stories.	☐	☐
○	●	NRCI-STH-01-E - Must be submitted for all newly installed Solar Water Heating systems being used to comply with §110.10(b)1B for high-rise multifamily, Hotel/Motel buildings less than 10 stories and nonresidential buildings less than 4 stories.	☐	☐

K. DECLARATION OF REQUIRED CERTIFICATES OF ACCEPTANCE

There are no Certificates of Acceptance applicable to solar ready requirements.

Registration Number: | Registration Date/Time: | Registration Provider: Energysoft

CA Building Energy Efficiency Standards - 2019 Nonresidential Compliance | Report Version: 2019.1.003 Schema Version: rev 20200601 | Report Generated: 2022-01-18 10:40:11

STATE OF CALIFORNIA
Solar Ready Areas
NRCC-SRA-E
CALIFORNIA ENERGY COMMISSION

CERTIFICATE OF COMPLIANCE			NRCC-SRA-E
Project Name:	Liberty High School Bldg B Science Classrooms	Report Page:	(Page 5 of 5)
Project Address:	850 2nd Street	Date Prepared:	1/18/2022

DOCUMENTATION AUTHOR'S DECLARATION STATEMENT

I certify that this Certificate of Compliance documentation is accurate and complete.

Documentation Author Name: Sarah Pernula	Documentation Author Signature: Sarah Pernula
Company: SOLDATA Energy Consulting	Signature Date: 2022-01-18
Address: 2227 Capricorn Way	CEA/ HERS Certification Identification (if applicable): NR16-90-20043
City/State/Zip: Santa Rosa CA 95407	Phone: 707.545.4440

RESPONSIBLE PERSON'S DECLARATION STATEMENT

I certify the following under penalty of perjury, under the laws of the State of California:
1. The information provided on this Certificate of Compliance is true and correct.
2. I am eligible under Division 3 of the Business and Professions Code to accept responsibility for the building design or system design identified on this Certificate of Compliance (responsible designer)
3. The energy features and performance specifications, materials, components, and manufactured devices for the building design or system design identified on this Certificate of Compliance conform to the requirements of Title 24, Part 1 and Part 6 of the California Code of Regulations.
4. The building design features or system design features identified on this Certificate of Compliance are consistent with the information provided on other applicable compliance documents, worksheets, calculations, plans and specifications submitted to the enforcement agency for approval with this building permit application.
5. I will ensure that a completed signed copy of this Certificate of Compliance shall be made available with the building permit(s) issued for the building, and made available to the enforcement agency for all applicable inspections. I understand that a completed signed copy of this Certificate of Compliance is required to be included with the documentation the Builder provides to the building owner at occupancy.

Responsible Designer Name: Jim Theiss	Responsible Designer Signature: Jim Theiss
Company: Quattrocchi Kwok Architects	Date Signed: 2022-01-18
Address: 636 Fifth Street	License: C-22643
City/State/Zip: Santa Rosa CA 95404	Phone: 707 576-0829

Registration Number: | Registration Date/Time: | Registration Provider: Energysoft

CA Building Energy Efficiency Standards - 2019 Nonresidential Compliance | Report Version: 2019.1.003 Schema Version: rev 20200601 | Report Generated: 2022-01-18 10:40:11

STATE OF CALIFORNIA
Outdoor Lighting
NRCC-LTO-E
CALIFORNIA ENERGY COMMISSION

CERTIFICATE OF COMPLIANCE			NRCC-LTO-E
Project Name:	Liberty High School Bldg B Science Classrooms	Report Page:	(Page 7 of 7)
Project Address:	850 2nd Street	Date Prepared:	1/18/2022

DOCUMENTATION AUTHOR'S DECLARATION STATEMENT

I certify that this Certificate of Compliance documentation is accurate and complete.

Documentation Author Name: Sarah Pernula	Documentation Author Signature: Sarah Pernula
Company: SOLDATA Energy Consulting	Signature Date: 2022-01-18
Address: 2227 Capricorn Way	CEA/ HERS Certification Identification (if applicable): NR16-90-20043
City/State/Zip: Santa Rosa CA 95407	Phone: 707.545.4440

RESPONSIBLE PERSON'S DECLARATION STATEMENT

I certify the following under penalty of perjury, under the laws of the State of California:
1. The information provided on this Certificate of Compliance is true and correct.
2. I am eligible under Division 3 of the Business and Professions Code to accept responsibility for the building design or system design identified on this Certificate of Compliance (responsible designer)
3. The energy features and performance specifications, materials, components, and manufactured devices for the building design or system design identified on this Certificate of Compliance conform to the requirements of Title 24, Part 1 and Part 6 of the California Code of Regulations.
4. The building design features or system design features identified on this Certificate of Compliance are consistent with the information provided on other applicable compliance documents, worksheets, calculations, plans and specifications submitted to the enforcement agency for approval with this building permit application.
5. I will ensure that a completed signed copy of this Certificate of Compliance shall be made available with the building permit(s) issued for the building, and made available to the enforcement agency for all applicable inspections. I understand that a completed signed copy of this Certificate of Compliance is required to be included with the documentation the Builder provides to the building owner at occupancy.

Responsible Designer Name: Pieter Colenbrander	Responsible Designer Signature: P. Colenbrander
Company: O'Mahony & Myer Electrical Eng & Lighting Dsgn	Date Signed: 2022-01-18
Address: 4340 Redwood Hwy, Suite 245	License: E14738
City/State/Zip: San Rafael CA 94903	Phone: 415 492-0420

Registration Number: | Registration Date/Time: | Registration Provider: Energysoft

CA Building Energy Efficiency Standards - 2019 Nonresidential Compliance | Report Version: 2019.1.003 Schema Version: rev 20200601 | Report Generated: 2022-01-18 10:40:11

STATE OF CALIFORNIA
Solar Ready Areas
NRCC-SRA-E
CALIFORNIA ENERGY COMMISSION

CERTIFICATE OF COMPLIANCE			NRCC-SRA-E
Project Name:	Liberty High School Bldg B Science Classrooms	Report Page:	(Page 1 of 5)
Project Address:	850 2nd Street	Date Prepared:	1/18/2022

This document is used to demonstrate compliance with mandatory requirements in §110.10 for newly constructed buildings which are either high-rise multifamily ten stories or fewer, hotel/motel ten stories or fewer or all other nonresidential buildings three stories or fewer. It is also used to demonstrate compliance with additions to these building types which add more than 2,000 ft^2 of roof area. Alterations or additions of less than 2,000ft^2 are not required to comply with §110.10.

A. GENERAL INFORMATION

01	Project Location (city)	Brentwood	04	Building Type	Other nonresidential bldg 3 stories or fewer
02	Climate Zone	12	05	Construction Type	New Construction
03	☐ Roof is designed for vehicle traffic, parking or for heliport				
03a	Plan sheet showing roof design for vehicle traffic, parking or heliport exception:				

B. PROJECT SCOPE

The compliance path the project is using to comply per §110.10(b)1B is indicated below.

My project consists of (check one):

1		
☒	Provide Solar Ready Area no exceptions	The project has allocated a solar zone on the roof plan per requirements in §110.10(b), as documented in Table F.
☐	Exception to Solar Ready Area: Installed Solar Photovoltaic System	The project includes a permanently installed solar electric system having a nameplate DC power rating, measured under Standard Test Conditions, of no less than one watt per square foot of roof area as documented in Table G.
	Exception to Solar Ready Area: Installed Solar Water Heating System	The project is a hotel/motel or high-rise multifamily occupancy and includes a permanently installed domestic solar water-heating system complying with §150.1(c)8Biii and Reference Residential Appendix RA4, as documented in Table H.
	Exception to Solar Ready Area: Smart Thermostat and Alternative Energy Efficiency Measure	The project is a high-rise multifamily occupancy where all thermostats in each dwelling unit comply with §110.12(a) AND at least one additional measure listed in Exception 4 to §110.10(b)1B is installed, as documented in Table I.

Registration Number: | Registration Date/Time: | Registration Provider: Energysoft

CA Building Energy Efficiency Standards - 2019 Nonresidential Compliance | Report Version: 2019.1.003 Schema Version: rev 20200601 | Report Generated: 2022-01-18 10:40:11

STATE OF CALIFORNIA
Solar Ready Areas
NRCC-SRA-E
CALIFORNIA ENERGY COMMISSION

CERTIFICATE OF COMPLIANCE			NRCC-SRA-E
Project Name:	Liberty High School Bldg B Science Classrooms	Report Page:	(Page 2 of 5)
Project Address:	850 2nd Street	Date Prepared:	1/18/2022

C. COMPLIANCE RESULTS

Results in this table are automatically calculated from data input and calculations in Tables F through I. Note: If any cell on this table says "DOES NOT COMPLY" or "COMPLIES with Exceptional Conditions" refer to Table D, for guidance or see the applicable Table referenced below.

Allocated Solar Zone 01		02		Installed PV System 03		04		Installed SWH System 05		06		Smart Tstat and Alternative EE Measure 07	08	09
Required Minimum Area (ft^2)	<=	Designated Area (ft^2)	OR	Required Minimum DC Power Rating (Watts)	<=	Designed DC Power Rating (Watts)	OR	Required Minimum Solar Savings Fraction	<=	Designed/Rated Solar Savings Fraction	OR	JA5 Compliant Thermostat Specified?	Alternative Energy Efficiency Measure	
(See Table F)				(See Table G)				(See Table H)				(See Table I)		COMPLIES
765.75	<=	770	OR		<=		OR		<=		OR			COMPLIES
A-B4.1				Location within the construction documents showing the location for inverters and metering equipment and a pathway for the routing of conduit/plumbing to the electrical service/ water heating system per §110.10(c).										COMPLIES

D. EXCEPTIONAL CONDITIONS

This table is auto-filled with uneditable comments because of selections made or data entered in tables throughout the form.

E. ADDITIONAL REMARKS

This table is includes remarks made by the permit applicant to the Authority Having Jurisdiction.

Registration Number: | Registration Date/Time: | Registration Provider: Energysoft

CA Building Energy Efficiency Standards - 2019 Nonresidential Compliance | Report Version: 2019.1.003 Schema Version: rev 20200601 | Report Generated: 2022-01-18 10:40:11

IDENTIFICATION STAMP
DIV. OF THE STATE ARCHITECT
APP: 01-119994 INC:
REVIEWED FOR
SS ☑ FLS ☑ ACS ☑
DATE: 08/16/2022

QUATTROCCHI KWOK ARCHITECTS
Main:
636 Fifth Street, Santa Rosa, CA 95404
East Bay:
55 Harrison Street, Suite 525,
Oakland, CA 94607
(707) 576-0829

LICENSED ARCHITECT
JIM THEISS
LICENSE # C22643
EXP JUNE 30, 2023
STATE OF CALIFORNIA
SIGNED: JUNE 24, 2022

LIBERTY HIGH SCHOOL

NEW CLASSROOM BUILDINGS

850 2ND STREET
BRENTWOOD, CA
94513

LIBERTY UNION HIGH SCHOOL DISTRICT

DSA APP NO. 01-119994
ARCH PROJECT NO: 1925.00
DRAWN BY: JDS
DRAWING SCALE: NTS
PTN: 61721-83 FILE NO: 7-H4
CONSTRUCTION DOCUMENTS
JUNE 24, 2022
SHEET TITLE

TITLE-24

SHEET NUMBER

T-B1.4

BIMcloud: archiserver - BIMcloud Basic for ARCHICAD 22/1925.00 Liberty HS Classroom_BLDG B_AC22:6/28/2022 3:42 PM